CHAPTER 53

FUSELAGE

TABLE OF CONTENTS

Subject	Subject No.
FUSELAGE	53-00
Station Diagram	53-00-1
Figure 1 - Fuselage Station Diagram - 737-100	
Figure 2 - Fuselage Station Diagram - 737-200, 737-200C	
Diagram of Pressurized Areas	53-00-2
Figure 1 - Pressurized Region Diagram	
MAIN FRAME	53-10
Allowable Damage	53-10-1
Figure 1 - Main Frame	
Figure 2 - Cargo Tiedown Fitting	
Figure 3 - Seat and Galley Floor Pallets	
Figure 4 - Fuselage Seat Track	
Figure 5 - Lower Lobe Cargo Track	
Figure 6 - Main Landing Gear Support Structure	
Figure 7 - Keel Beam Structure Allowable Damage	
Figure 8 - Section 48 Torque Box Allowable Damage	
Figure 9 - Allowable Damage - Laminated Stringer Tie	
Figure 10 - BS 178 Bulkhead Allowable Damage	
Figure 11 - Section 43 and 46 Cargo Floor Panel Allowable Damage	
Structure Identification	53-10-2
Figure 1 - Section 41	
Figure 2 - Nose Wheel Well	
Figure 3 - Section 43	
Figure 4 - Keel Beam and Wing Center Section Support	
Figure 5 - Section 46	
Figure 6 - Section 48	
Figure 7 - Main Cabin Floor Beams and Seat Tracks	
Figure 8 - Cargo Floor	
Figure 9 - Fuselage Stringer	
Figure 10 - Overhead Interior Support Structure, Hatracks	
Figure 11 - SLAMMR Fairing Support Reinforcement	
Figure 12 - Section 43 Crease Beam Identification	
Figure 13 - Section 46 Crease Beam Identification	
Stringer Repair	53-10-3
Service Bulletin Repair List	
Figure 1 - Fuselage Stringer Repair - Stringer 14 to Stringer 28	
Figure 2 - Longitudinally Cracked Stringer - Typical Repair	
Figure 3 - Fuselage Crown Stringer Repair (Type III Stringers)	
Figure 4 - Longitudinally Cracked Crown Stringer - Typical Repair	
Figure 5 - Fuselage Stringer S-7 Crack Repairs	

BOEING PROPRIETARY - Copyright © - Unpublished Work - See title page for details.

Subject	Subject No.
Frame Repair	53-10-4
Service Bulletin Repair List	
Figure 1 - Fuselage "Z" Frame Repair	
Figure 2 - Fuselage Crown Frame Repair	
Figure 3 - Deleted	
Figure 3A - Body Station 1016 Pressure Bulkhead Cutout Repair	
Figure 4 - Repair to Cracked Pressure Web - Bulkhead Station 663.75	
Figure 5 - Deleted	
Figure 5A - "Oil Can" Repair to Aft Pressure Bulkhead Web	
Figure 6 - Frame Repair at Skin Attachment - Repair 1 (Area of Support Angle/Clip)	
Figure 7 - Frame Repair at Skin Attachment - Repair 2 (Area of Support Angle/Clip)	
Figure 8 - Shear Tie Repair at Skin Attachment - Repair 1	
Figure 9 - Shear Tie Repair at Skin Attachment - Repair 2	
Figure 9A - Shear Tie Repair at Skin Attachment - Repair 3	
Figure 10 - Frame Repair at Skin Attachment - Repair 1	
Figure 11 - Frame Repair at Skin Attachment - Repair 2	
Figure 12 - Deleted	
Figure 13 - Deleted	
Figure 14 - STA 663.75 Frame Repair	
Figure 15 - STA 1016 Aft Pressure Bulkhead Web to "Y" Chord Attachment Crack Repair	
Figure 16 - BS 188.0 Frame Repair at WL 207.0	
Track Extrusion Repair	53-10-5
Figure 1 - Seat Track Repair - Overwing (BAC 1520-841 or -1429 extrusions)	
Figure 2 - Seat Track Repair - Preferred (Splice at Floor Beam, BAC 1520-792 extrusions)	
Figure 3 - Seat Track Optional Repair (Splice between floor Beams, BAC 1520-792 extrusions)	
Figure 4 - Cargo Track Repair at Frame (Lower Lobe, BAC 1520-843 extrusions)	
Figure 5 - Cargo Track Repair Between Frames (Lower Lobe, BAC 1520-843 extrusions)	
Figure 6 - Cargo Floor Beam Repair (Lower Lobe)	
Figure 7 - Seat Track Repair (BAC 1520-1430 extrusions)	
Figure 8 - Seat Track Repair (BAC 1520-1432 or -1434 extrusions)	
Figure 9 - Seat Track Repair (BAC 1520-1433 extrusions)	
Figure 10 - Seat Track Repair (BAC 1520-1331 extrusions)	
Figure 11 - Cargo Track Repair - Lower Lobe (BAC1520-1397 extrusions)	
Beam Repair	53-10-6
Service Bulletin Repair Chart	
Figure 1 - Lower Beam Repair BBL 40.875 Wing Center Section	
Figure 2 - Keel Beam Lower Chord Repair - Inboard Flange	
Figure 3 - Keel Beam Lower Chord Repair - Outboard Flange	
Access Holes	53-10-7
Figure 1 - Deleted	
Figure 2 - Deleted	
Wheel Well Repairs	53-10-8
Service Bulletin Repair Chart	

BOEING PROPRIETARY - Copyright © - Unpublished Work - See title page for details.

Subject	Subject No.
Main Deck Floor Structure Repairs	53-10-9
Service Bulletin Repair Chart	
Figure 1 - Section 41 and 43 Floor Beam Upper Chord Repair	
Figure 2 - Section 46 Floor Beam Upper Chord Repair	
Figure 3 - Section 46 Floor Beam Upper Chord Repair at Seat Track Location	
Figure 4 - Section 41 Floor Structure Stabilizer Strap Crack Repair	
Figure 5 - Section 41 Floor Beam Upper Chord Repair	
Figure 6 - Section 41 Repair to One Flange of the Floor Beam Upper Chord	
Figure 7 - Section 41, 43 and 46 Repair to One Flange of the Floor Beam Upper or Lower Chord	
Figure 8 - BL 24.67 Floor Beam Web Access Hole Installation Between BS 178 and BS 188	
Intercostal Repairs	53-10-10
Service Bulletin Repair Chart	
Figure 1 - Stringer 16L Intercostal - Web Repair Between BS 351 and BS 360	
Bulkhead Repairs	53-10-11
Figure 1 - BS 178 Bulkhead - Web Repairs	
Figure 2 - BS 178 Bulkhead - Access Hole Installation	
Figure 3 - Repair of Glide Slope Antenna Attach Bracket	
Figure 4 - Body Station 178 Bulkhead Web Repair at BL 0 and WL 187	
Figure 5 - BS 178 Bulkhead – Access Hole Installation with a Cover Plate at WL 211.0and BL 23.0, and with No Fail-Safe Clip at WL 210	
Figure 6 - BS 178 Bulkhead – Side Chord Time Limited Repair at WL 212	
Figure 7 - BS 178 Bulkhead Installation – WL 195 Intercostal Repair	
Figure 8 - BS 178 Bulkhead – Repair of the LBL 5.7 or RBL 5.7 Vertical Beam Forward Chord Below WL 190	
Figure 9 - BS 178 Bulkhead – Web Repair at LBL 5.7 or RBL 5.7 Between WL 195 and WL 220	
Figure 10 - BS 178 Bulkhead - Web Repair Between LBL 7.5 and RBL 7.5 from WL 184.0 to WL 218.0	
Figure 11 - BS 178 Vertical Beams - Time Limited Web Repair at LBL 5.7, RBL 5.7, LBL 17.1 and RBL 17.1	
Figure 12 - Shear Web Crack Repair Between Stations 196.5 and 188	
Figure 13 - Body Station 1016 Pressure Bulkhead Web Repair - Single Gore Web	
Figure 14 - Body Station 1016 Pressure Bulkhead Web Repair - All Gore Web	
Section 48 Repairs	53-10-12
Service Bulletin Repair Chart	
Figure 1 - APU Torque Bar Beam Repair	
Figure 2 - Installation of Access Holes R.H. Lower Torque Box (APU Plenum) - Modification	
Figure 3 - STA 1088 Bulkhead Web Repair - APU Air Inlet Duct Cutout	
Cargo Floor Structure Repairs	53-10-13
Figure 1 - Section 46 Cargo Compartment Floor Panel Support Zee Repair	
Figure 2 - Section 46 Cargo Compartment Floor Panel Support Zee Repair at a Floor Panel Splice	
AUXILIARY STRUCTURE	53-20
Structure Identification	53-20-1
Figure 1 - 737-100 and -200, Main Floor Panels	
Figure 2 - Partition	
Figure 3 - 737-200C, Main Floor Panels	
Figure 4 - Seat Pallet	
Figure 5 - Section 46 Cargo Compartment Partition Identification	

BOEING PROPRIETARY - Copyright © - Unpublished Work - See title page for details.

Subject | Subject No.

Seat Pallet and Floor Panel Repairs 53-20-2
Figure 1 - Seat Pallet Panel Repairs
Figure 2 - Metal Faced PVC, Balsa and Nomex Core Floor Panel Repair
Figure 3 - Fiberglass Faced PVC, Balsa and Nomex Core Floor Panel Repair
Figure 4 - Main Deck Zee Flooring - Repair for Damaged Face Plate
Figure 5 - Main Deck Zee Flooring - Repair for Damaged Face Plate in Zee Stiffener Area
Figure 6 - Main Deck Zee Flooring - Repair for Zee Stiffener
Figure 7 - Main Deck Zee Flooring - Repair for Pulled Spotwelds
Figure 8 - Main Deck Floors with Hat-Shaped Stiffeners - Repair - for Damaged Spot Welds
Figure 9 - Removed
Figure 10 - Removed
Allowable Damage 53-20-3
Figure 1 - Main Deck Zee Flooring - Allowable Damage
Figure 2 - Main Deck Floor Panel Allowable Damage
PLATES/SKIN 53-30
Allowable Damage 53-30-1
Figure 1 - Fuselage Skin Allowable Damage
Figure 2 - Fuselage Skin Damage Limitations
Figure 3 - Bond Delamination Repair at Fuselage Skin Lap Joints
Figure 4 - Allowable Corrosion or Damage to Fuselage Skin
Figure 5 - Bond Delamination Repair at Fuselage Joint
Figure 6 - Fuselage Skin Fastener Allowable Damage Around the Flight Deck Windows
Skin Identification 53-30-2
Figure 1 - Flight Compartment
Figure 2 - 737-100 Airplanes
Figure 3 - 737-200 and 737-200C Airplanes
Skin Repair 53-30-3
Service Bulletin Repair List
Figure 1 - Removed
Figure 2 - Removed
Figure 3 - Fuselage Skin - Flush Repair Between Stringers and Adjacent to Waffle Doubler
Figure 4 - Fuselage Skin - Small External Repair (Holes not exceeding 1 inch dia.)
Figure 5 - Fuselage Skin - Small Flush Repair (Holes not exceeding 1 inch dia. See Fig. 18 for preferred repair)
Figure 6 - Removed
Figure 7 - Removed
Figure 8 - Removed
Figure 9 - Removed
Figure 10 - Removed
Figure 11- Skin Repair - Flight Compartment (For damage and cracks up to 1.50 inches long)
Figure 11A-Alternate Skin Repair - Control Cabin
Figure 12 - E-F Windshield Post - Doubler Repair - Flight Compartment (See SB 53-1023 for details)
Figure 13 - Fuselage Skin, Longitudinal Lap Splices - External Repairs for Damaged Upper and Lower Skins
Figure 14 - Removed
Figure 15 - Removed
Figure 16 - Removed

BOEING PROPRIETARY - Copyright © - Unpublished Work - See title page for details.

Subject | Subject No.

Skin Repair (Cont) 53-30-3
Figure 17 - Fuselage Skin - Doubler and Strap Delamination and Corrosion Repair (For damage below stringer S-14 only)
Figure 18 - Fuselage Skin, Preferred Small Flush Repair for 0.036 Skin (Preferred to Fig. 5)
Figure 19 - Removed
Figure 20 - Skin and Bonded Doubler Repair - Forward Galley Door Upper Hinge Cutout
Figure 21 - Skin and Bonded Doubler Repair - Forward Entry Door Upper Hinge Cutout
Figure 21A - Skin and Doubler Repair - Aft Galley and Aft Entry Door Upper Hinge Cutout
Figure 22 - Deleted
Figure 23 - Repair of Lightening Strike Damage on Pressurized Fuselage Skin
Figure 24 - Fuselage Skin Repair - Aft Galley and Aft Entry Door Cutouts
Figure 25 - Removed
Figure 26 - Fuselage Skin Repair at Forward Galley Door Skin Cutout
Figure 27 - Removed
Figure 28 - Removed
Figure 29 - Fuselage Skin - Rain Gutter at the the Forward Entry Forward Galley Doors
Figure 30 - Skin Repair - BS 1138 and Stringer S-12
Figure 31 - Skin and Bonded Doubler Repair - Forward Entry Door Lower Hinge Cutout
Figure 32 - Skin and Bonded Doubler Repair - Forward Galley Door Lower Hinge (For Damage at the Hinge Cutout)
Figure 33 - Skin and Doubler Repair - Aft Galley Door Lower Hinge Cutout
Figure 34 - Skin and Doubler Repair - Aft Entry Door Lower Hinge Cutout
Figure 35 - Skin and Doubler Repair - Aft Galley Door Lower Hinge Cutout (Cum Line Number 1015 and on)
Figure 36 - Skin and Doubler Repair - Aft Entry Door Lower Hinge Cutout (Cum Line Number 1015 and on)
Figure 37 - Fuselage Stringer S-12 Strap Crack Repair Between BS 1121 and BS 1138
Figure 38 - Fuselage Skin Repair for Damage at the Window Belt
Figure 39 - Removed
Figure 40 - Keel Beam Lower Skin Repair Between BS 660 and BS 724
Figure 41 - Fuselage Skin - Small External Repair with Blind Fasteners
Figure 42 - Fuselage Skin, Longitudinal Lap Splice - Repair for Damaged Lower Skin at the Longitudinal Lap Joint Lower Row
Figure 43 - Fuselage Skin - Small External Repair with Solid Fasteners
Figure 44 - Fuselage Skin, Longitudinal Splice Repair - Damaged Lower Skin at S-10 and S-14 Between BS 727 and BS 727B
Figure 45 - Skin, Doubler, and Bear Strap Repair at the Aft Galley and Entry Doors Lower Hinge

BOEING PROPRIETARY - Copyright © - Unpublished Work - See title page for details.

Subject	Subject No.
Figure 46 - Skin, Doubler, and Bear Strap Repair at Door Cutouts	53-30-3
Figure 47 - Fuselage Skin Crack Repair at Flight Compartment C-D Post, Point C.	
Figure 48 - General Fuselage Skin Repair	
Figure 49 - Fuselage General Skin Repair Between BS 178 and BS 259.5	
Figure 50 - Section 48 - Fuselage Skin Repair	
Figure 51 - Fuselage Skin Repair at Aft Jack Point, Station 1088	
Figure 52 - Skin, Doubler and Bear Strap Repair at Forward Entry Door Cutout Lower Aft Corner	
Figure 53 - Skin, Doubler and Bear Strap Repair at Airstair Door Cutout Upper Forward Corner	
Sealing of Fuselage Skin Repairs and Cold Bonded Fuselage Structure for Protection Against Corrosion	53-30-4
Figure 1 - Sealants and Associated Materials	
Figure 2 - Cure Properties for Fillet and Faying Surfaces Sealants	
Figure 3 - Specific Sealing Areas of Fuselage Structure	
ATTACH FITTINGS	53-40
CONES AND FILLETS/FAIRINGS.	53-50
Fairing Identification	53-50-1
Figure 1 - Radome Material	
Figure 2 - Wing to Body Fairing - Skin	
Figure 3 - Wing to Body Fairing - Structure	
Figure 3A - Wing to Body Drag Angles	
Figure 4 - Fuselage Tail Cone	
Figure 5 - Dorsal Fin	
Figure 6 - SLAMMR Radome Fairing	
Allowable Damage	53-50-2
Figure 1 - Wing to Body Fairing Structure Allowable Damage	
Figure 2 - Nose Radome Allowable Damage	
Repairs	53-50-3
Service Bulletin Repair Chart	
Figure 1 - Wing to Body Fairing Structure Repairs	
NOSE RADOME REPAIR	53-50-4
Figure 1 - Core Material and Thickness for Nose Radomes	
Figure 2 - Nose Radome Repair (General)	
Figure 3 - Repair Limitations	
Figure 4 - Resin Specifications and Mixing Procedures	
Figure 5 - Curing of Repair	
Figure 6 - Application of Pressure During Cure	
Figure 7 - Heat Lamp Temperature Curve	
Figure 8 - Repair of Honeycomb Sandwich After Water Removal	
Figure 9 - Antistatic Finish of Weather Radome	

BOEING PROPRIETARY - Copyright © - Unpublished Work - See title page for details.

FUSELAGE

1. General

A. This chapter contains information concerning the structural components of the entire fuselage.

B. Materials of these structural components, are tabulated. Their locations and arrangement are shown by illustrations. The pressurized areas are shown in 53-00-2.

C. Sealing procedure of structural repairs in the pressurized sections of the fuselage is indicated in 53-30-4.

D. Leakage testing should be done according to Chapter 5 of the Maintenance Manual after completion of repairs as follows:

(1) Repairs on frames bulkheads and adjacent skin panels.

(2) Repairs or replacement of structure adjacent to main entry doors, cargo doors, emergency hatches, or galley doors.

(3) Repairs to main entry doors, cargo doors, galley doors or emergency hatches.

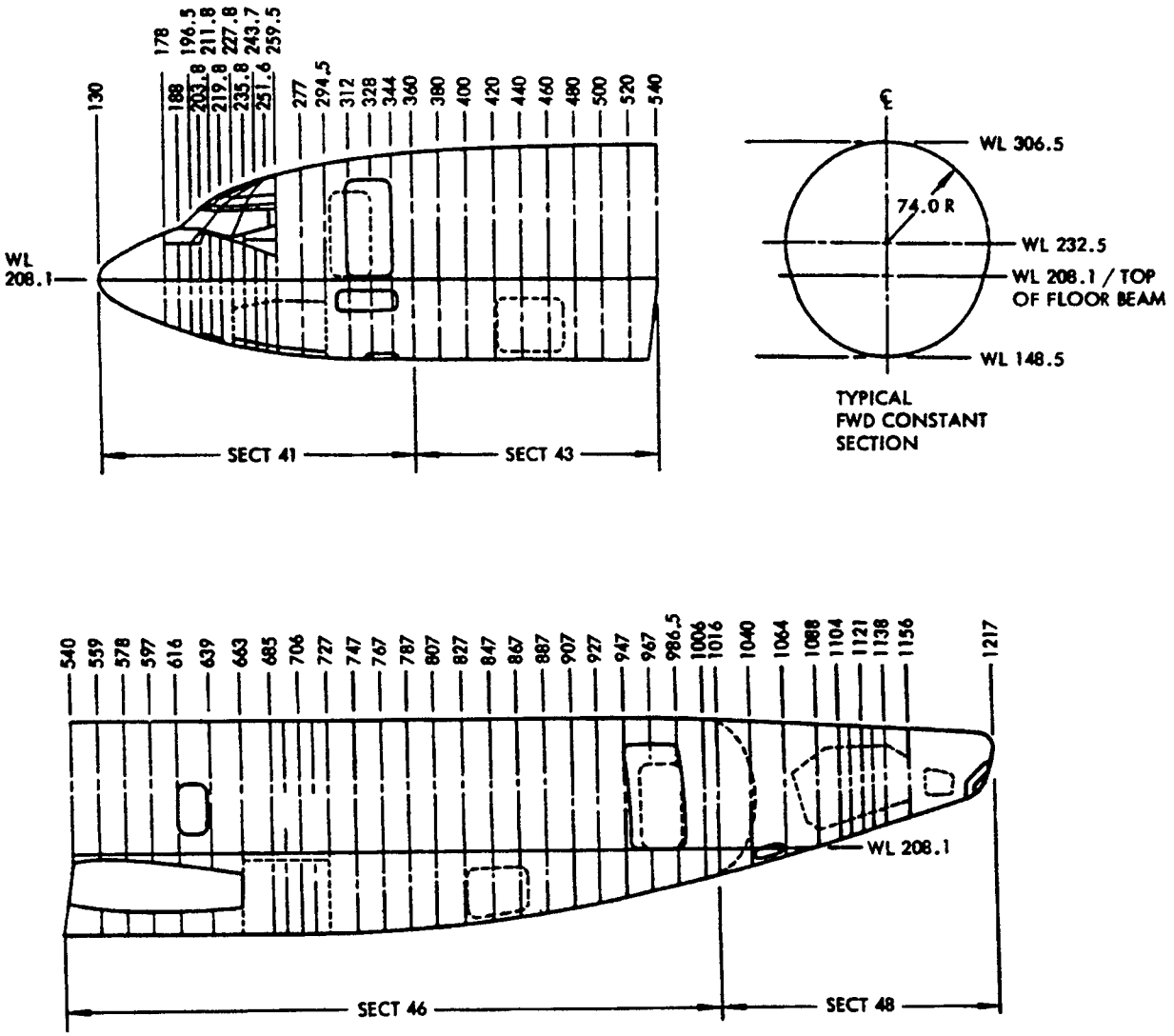

Fuselage Station Diagram - 737-100
Figure 1 (Sheet 1)

EFFECTIVITY
737-200 737-200C

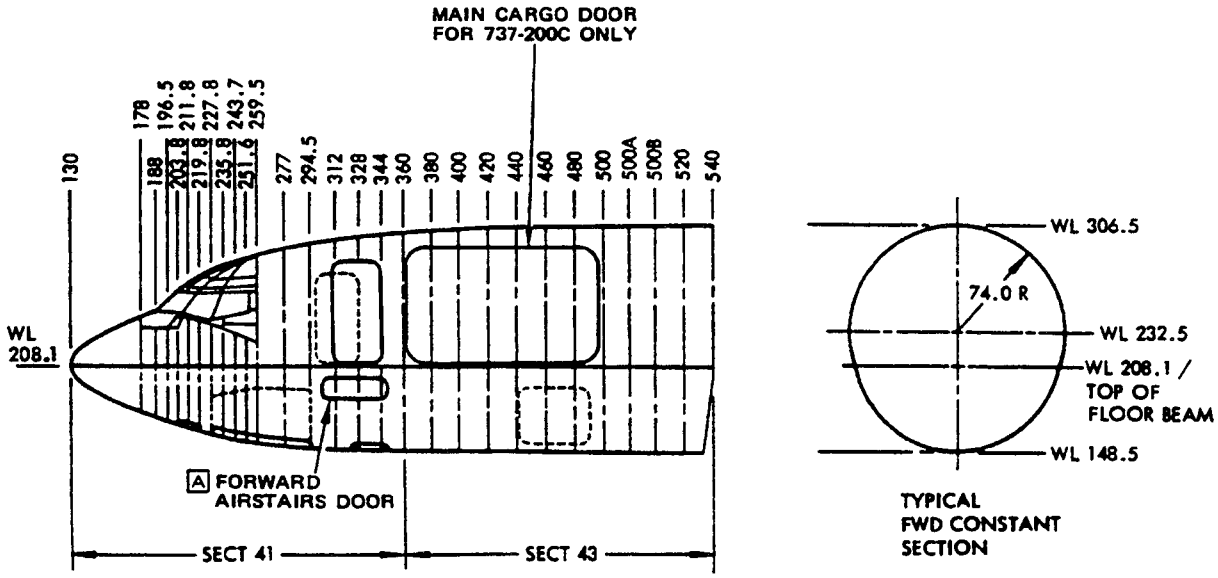

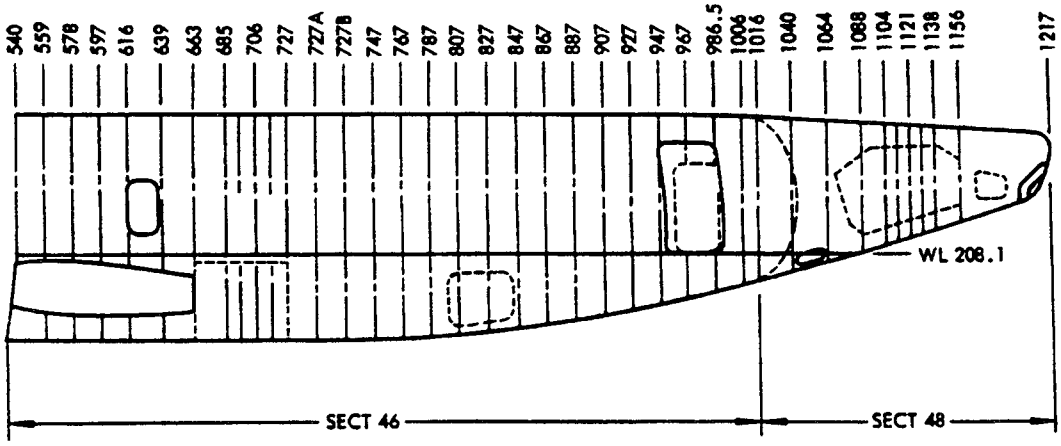

A FORWARD AIRSTAIRS AND FORWARD AIRSTAIRS DOOR ARE NOT INCLUDED IN CUM LINE NUMBERS
726, 727, 734, 745, 754, 759, 762, 766, 768, 770, 776, 780, 781, 785, 788, 791, 792, 794, 796, 798

Fuselage Station Diagram - 737-200, 737-200C
Figure 2 (Sheet 1)

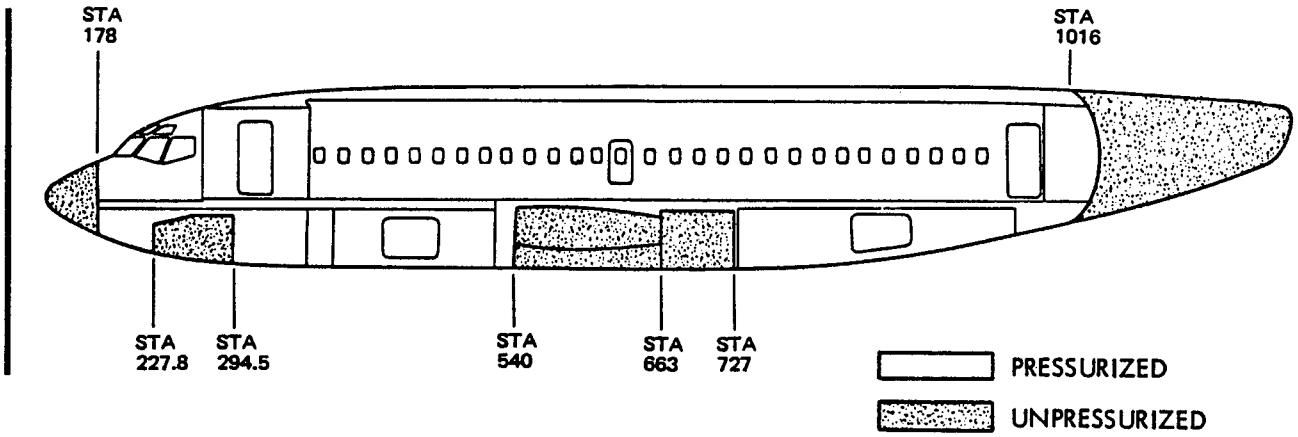

Pressurized Region Diagram
Figure 1

NOTES

- DAMAGE, SUCH AS BLENDOUTS, TRIMOUTS, OR DENTS:
  - THAT OCCUR TO A STRUCTURALLY SIGNIFICANT ITEM (SSI) GIVEN IN SRM 51-00-4, FIG. 3 AND,
  - THAT ARE WITHIN THE ALLOWABLE DAMAGE LIMITS OF THE BOEING SRM,

  DO NOT HAVE AN EFFECT ON THE DAMAGE TOLERANCE PROPERTIES OF THE SSI. THEREFORE, EXISTING SUPPLEMENTAL STRUCTURAL INSPECTION DOCUMENT (SSID) INSPECTION PROGRAMS REMAIN EFFECTIVE.
- REFER TO SRM 51-10-1 FOR DAMAGE CLASSIFICATION.
- FOR ALL BARE ALUMINUM:
  - APPLY A CHEMICAL CONVERSION COATING. REFER TO SRM 51-10-2.
  - APPLY TWO LAYERS OF BMS 10-11, TYPE 1 PRIMER. REFER TO SOPM 20-41-02.

[A] A REPAIR TO A CROWN STRINGER IS REQUIRED WHEN DAMAGE REMOVAL EXCEEDS THE LIMITS OF DETAIL VI OR WHEN REMOVAL OF A GOUGE OR SCRATCH ACCORDING TO DETAIL I EXCEEDS 10% OF THE CROSS SECTIONAL AREA.

[B] DIMENSIONS AFTER DAMAGE REMOVAL.

[C] CRACKS OR HOLES ARE NOT ALLOWED IN THE WEB. MAXIMUM DEPTH OF A SCRATCH, GOUGE, ABRASION OR CORROSION DAMAGE (AFTER CORROSION CLEANUP) MUST NOT EXCEED 10% OF THE WEB GAGE. REMOVE DAMAGE ACCORDING TO DETAIL I.

[D] CRACKS OR HOLES ARE NOT ALLOWED IN ANY WEB OF BULKHEAD STATIONS 294.50 AND 1156.

[E] HOLE DIAMETER MUST NOT EXCEED 0.50.

[F] MAXIMUM DEPTH OF A SCRATCH OR GOUGE MUST NOT EXCEED THAT GIVEN FOR PRESSURIZED FUSELAGE SKINS. REFER TO SRM 53-30-1, FIGURE 2.

[G] MAXIMUM DEPTH OF A SCRATCH, GOUGE OR ABRASION MUST NOT EXCEED 10% OF THE WEB GAGE. REMOVE DAMAGE ACCORDING TO DETAIL I.

[H] A REPAIR TO A TYPICAL STRINGER IS REQUIRED WHEN DAMAGE REMOVAL EXCEEDS THE LIMITS OF DETAIL VI OR WHEN REMOVAL OF A GOUGE OR SCRATCH ACCORDING TO DETAIL I EXCEEDS 10% OF THE CROSS SECTIONAL AREA.

[J] THE ONLY HOLES ALLOWED IN THE CROWN STRINGERS ARE THOSE ORIGINALLY REQUIRED BY THE MANUFACTURER.

[K] MAINTAIN EDGE MARGINS ON ALL FASTENERS. WHEN THE DISTANCE IS LESS, TRIM OUT HOLE ACCORDING TO DETAIL II.

[L] PLUG HOLES WITH RIVETS.

[M] PLUG ONLY IF OUTSIDE CENTER HALF OF WEB WIDTH. PLUG WITH RIVETS TO 0.25 DIAMETER MAXIMUM. BEYOND THIS DIAMETER PLUG WITH 5056 SLUGS INSTALLED WET WITH PRIMER. DO NOT INSTALL SLUGS IN 2024 MATERIAL.

[N] MAXIMUM DEPTH OF A SCRATCH, GOUGE, ABRASION OR CORROSION DAMAGE (AFTER CORROSION CLEANUP) MUST NOT EXCEED 10% OF THE STIFFENER GAGE. REMOVE DAMAGE ACCORDING TO DETAIL I.

[O] CRACKS OR HOLES ARE NOT ALLOWED. MAXIMUM DEPTH OF A SCRATCH, GOUGE, ABRASION OR CORROSION DAMAGE (AFTER CORROSION CLEANUP) MUST NOT EXCEED 10% OF THE FLANGE THICKNESS. REMOVE DAMAGE ACCORDING TO DETAIL I.

[P] CRACKS OR HOLES ARE NOT PERMITTED. NICKS, GOUGES, SCRATCHES, AND CORROSION (AFTER CLEANUP) MUST NOT BE MORE THAN 10% OF THE INITIAL THICKNESS OF A FLANGE. SEE DETAIL I.

[Q] CRACKS OR HOLES ARE NOT ALLOWED IN THE SPLICE ANGLE. MAXIMUM DEPTH OF A SCRATCH, GOUGE, ABRASION OR CORROSION DAMAGE (AFTER CORROSION CLEANUP) MUST NOT EXCEED 10% OF THE ANGLE GAGE. REMOVE DAMAGE ACCORDING TO DETAIL I.

[R] RESTORE LEVELING COMPOUND WITH BMS 5-95 AS REQUIRED AFTER LOWER LOBE BULKHEAD REPAIR OR CORROSION CLEANUP. IF EXISTING COMPOUND HAS CRACKED OR HAS SEPARATED FROM THE METAL SURFACE, REMOVE COMPOUND AND REPLACE WITH BMS 5-95.

[S] THE MAXIMUM DEPTH OF A SCRATCH, GOUGE OR ABRASION ON A CROWN STRINGER MUST NOT BE MORE THAN 10% OF THE STRINGER GAGE. REMOVE THE DAMAGE AS SHOWN IN DETAIL I.

[T] THE MAXIMUM DEPTH OF A SCRATCH, GOUGE, OR ABRASION ON A TYPICAL STRINGER MUST NOT BE MORE THAN 15% OF THE STRINGER GAGE. REMOVE THE DAMAGE AS SHOWN IN DETAIL I.

[U] REMOVE SCRATCHES, NICKS, GOUGES AND CORROSION AS SHOWN IN DETAILS I, II, III, IV AND V. REFER TO SRM 51-10-2.

[V] DENTS ARE PERMITTED ON THE WEB OF THE LEG ONLY. DAMAGE IS PERMITTED TO ONE LEG OF THE STRINGER ONLY. NO OTHER DENTS ARE PERMITTED WITHIN 5 INCHES OF THE INITIAL DENT ON THE DAMAGED STRINGER AND ON THE ADJACENT STRINGERS.

Allowable Damage - Main Frame
Figure 1 (Sheet 1)

BOEING PROPRIETARY - Copyright © - Unpublished Work - See title page for details.

NOTES (CONT.)

[W] AN "OIL CAN" CONDITION IS AN AREA ON THE PRESSURE DOME WEB, AT THE STATION 1016 BULKHEAD, THAT HAS VISIBLY MOVED FORWARD FROM THE INITIAL CONTOUR OF THE PRESSURE DOME WEB. REFER TO DETAIL I SECTION E-E.

WHEN INSPECTING FOR AN "OIL CAN" CONDITION, MAKE SURE THE AIRCRAFT IS NOT JACKED, CRADLED, OR SUPPORTED AT OR AFT OF THE PRESSURE BULKHEAD.

WHEN YOU FIND AN "OIL CAN" CONDITION, INSPECT THE "OIL CAN" AREA AND ADJACENT STRUCTURE AS GIVEN IN [Z].

AN "OIL CAN" CONDITION IS PERMITTED WITHOUT A REPAIR FOR 12,000 FLIGHT CYCLES, AS A TIME-LIMITED CONDITION, PROVIDED:

1. YOU NDT INSPECT AS GIVEN IN [Z] THE "OIL CAN" AREA AT EACH 1200 FLIGHT CYCLE INTERVAL.
2. YOU INSTALL A REPAIR AT OR BEFORE 12,000 FLIGHT CYCLES FROM THE TIME THE DAMAGE IS FOUND.
3. THE DAMAGE IS SMOOTH AND FREE FROM SHARP CREASES, GOUGES OR CRACKS.
4. THE DAMAGE HAS NOT CAUSED ANY DEFORMATION TO A STIFFENER, STRAP, CHORD OR DOUBLER.
5. THE "OIL CAN" IS AT LEAST 0.6 INCH (15.2 mm) AWAY FROM ANY ADJACENT FASTENERS. FASTENERS ARE NOT PERMITTED INSIDE THE "OIL CAN" DAMAGE AREA.
6. THERE IS NO INDICATION OF PRESSURE LEAKAGE, DAMAGED HOLES, AND LOOSE OR MISSING FASTENERS.
7. THE MAXIMUM "OIL CAN" DEPTH SHALL NOT BE MORE THAN 0.2 INCHES (5.1MM). THE WIDTH TO DEPTH (W/D) RATIO SHALL NOT BE MORE THAN THE ALLOWABLE LIMITS GIVEN IN GRAPH I (LOWER CURVE).
8. IF THE "OIL CAN" IS CONCAVE FORWARD WITH THE WEB BULGE FORWARD OF THE DESIGN CONTOUR, AND IF THE "OIL CAN"IS PRESSED WITH 12 LBS OF HAND PRESSURE FROM THE FORWARD SIDE, THE WEB POPS AFT AND REMAINS AFT AFTER HAND PRESSURE IS RELEASED.

MORE THAN ONE "OIL CAN" CONDITION IS PERMITTED IF THE CONDITIONS GIVEN IN STEP 3 THROUGH 8 ARE MET, AND THE EDGE OF THE "OIL CAN" IS LOCATED NO LESS THAN 2.0 INCHES (50.80 mm) FROM THE EDGE OF ANOTHER "OIL CAN".

IF AN "OIL CAN" CONDITION DOES NOT MEET THE CONDITIONS GIVEN IN STEP 3. THROUGH 8., THEN THE "OIL CAN" MUST BE REPAIRED. SEE GRAPH I FOR REPAIR PROCEDURE.

[X] FABRICATE TOOL 0.6 - 1.0 WIDE x 0.03 - 0.06 THICK, LONG ENOUGH TO MATCH UNDEFORMED CONTOUR OF PRESSURE WEB.

[Y] MEASURED ACROSS THE MINIMUM WIDTH OF THE "OIL CAN" AT THE PERIMETER.

[Z] "OIL CAN" ALLOWABLE DAMAGE LIMITS AND REPAIR REQUIREMENTS ARE GIVEN IN GRAPH I. BEFORE AN "OIL CAN" REPAIR OR BEFORE CONTINUED SERVICE WITH AN UNREPAIRED "OIL CAN" ON A TIME LIMIT BASIS, INSPECT THE "OIL CAN" AND ADJACENT STRUCTURE FOR CRACKS AS SPECIFIED BELOW:

1. DO A DETAILED VISUAL AND HIGH-FREQUENCY EDDY CURRENT (HFEC) SURFACE INSPECTION OF THE GORE WEB FOR CRACKS AT THE "OIL CAN" LOCATION AS GIVEN IN NDT MANUAL PART 6, 51-00-00, FIGURE 4 OR 23.
2. DO AN NDT INSPECTION OF THE WEB FROM THE AFT SIDE OF THE PRESSURE BULKHEAD AT ALL FASTENER LOCATIONS COMMON TO THE OUTER BAY AREA IN WHICH THE "OIL CAN" IS FOUND.

   DO A LOW FREQUENCY EDDY CURRENT (LFEC) INSPECTION AS GIVEN IN NDT MANUAL PART 6, 53-10-41, AT THE LOCATIONS THAT FOLLOW AS APPLICABLE:

   a. AT THE FORWARD WEB LAP SPLICE HIDDEN FASTENER ROWS.
   b. AT THE WEB UNDERNEATH THE CIRCUMFERENTIAL TEAR STRAPS.

   DO A HIGH-FREQUENCY EDDY CURRENT (HFEC) INSPECTION OF THE WEB AROUND THE FASTENERS AS GIVEN IN NDT MANUAL PART 6, 51-00-00, FIGURE 4 OR 23 AT THE LOCATIONS THAT FOLLOW AS APPLICABLE:

   c. AT THE WEB COMMON TO THE RADIAL STIFFENERS.
   d. AT THE AFT WEB COMMON TO A LAP SPLICE.

Allowable Damage - Main Frame
Figure 1 (Sheet 2)

BOEING PROPRIETARY - Copyright © - Unpublished Work - See title page for details.

NOTES (CONT.)

IF THE "OIL CAN" IS IN THE OUTER BAY ADJACENT TO THE WEB COMMON TO THE "Y" CHORD, INSPECT THE LOCATIONS THAT FOLLOWS AS APPLICABLE:

e. DO AN INSPECTION AS GIVEN IN NDT MANUAL PART 6, 53-10-54 FROM THE AFT SIDE OF THE BULKHEAD AS SHOWN IN DETAIL XIX. IT IS NOT NECESSARY TO INSPECT THE WEB IN THE AREA OF THE STEEL STRAPS. ALTHOUGH NDT MANUAL PART 6, 53-10-54 IS ONLY APPLICABLE BETWEEN S-15L TO S-15R, YOU CAN USE IT FOR ALL THE PERIPHERY.

f. AS AN ALTERNATIVE TO DOING AN INSPECTION OF THE WEB COMMON TO THE "Y" CHORD FROM THE AFT SIDE OF THE BULKHEAD, YOU CAN DO A HIGH-FREQUENCY EDDY CURRENT (HFEC) INSPECTION AT THE AFT FASTENER ROW FROM THE FORWARD SIDE OF THE BULKHEAD AS SHOWN IN DETAIL XX. YOU CAN DO THE INSPECTION AROUND THE FASTENERS AS GIVEN IN NDT MANUAL PART 6, 51-00-00, FIGURE 4 OR 23, EXCEPT AS FOLLOWS:

(1) WHERE A RADIAL STIFFENER OVERLAPS THE "Y" CHORD AT THE PERIMETER OF THE WEB AT THE FASTENER LOCATIONS, INSPECT AS GIVEN IN NDT MANUAL PART 6, 51-00-00, FIGURE 4 OR 23. INSPECT THE WEB ALONG THE EDGE OF THE RADIAL STIFFENER ADJACENT TO THE FASTENER LOCATIONS TO BE INSPECTED. INSPECT THE WEB TO 1.0 INCH ON EACH SIDE OF THE FASTENER ROW.

(2) WHERE THE TERMINAL FITTING DOUBLERS OVERLAP THE WEB, INSPECT THE WEB ALONG THE EDGE OF THE DOUBLERS. INSPECT AS GIVEN IN NDT MANUAL PART 6, 51-00-00, FIGURE 4 OR 23.

(3) DO A LOW FREQUENCY EDDY CURRENT (LFEC) INSPECTION FROM THE AFT SIDE OF THE BULKHEAD WEB AT THE "Y" CHORD SPLICE AND COMMON TO THE FLOOR STRUCTURE. INSPECT AS GIVEN IN NDT MANUAL PART 6, SRM 53-10-54. REFER TO DETAIL XX.

g. IF THERE IS A CRACK IN THE WEB WHEN YOU DO A LOW FREQUENCY EDDY CURRENT (LFEC) INSPECTION, THEN REMOVE THE FASTENERS AT THE NDT INSPECTION LOCATION. THEN DO A HIGH FREQUENCY EDDY CURRENT (HFEC) INSPECTION FROM THE OPPOSITE SIDE OF THE PRESSURE BULKHEAD AT THE DAMAGE LOCATION.

h. IF YOU CANNOT GET ACCESS TO THE WEB TO DO A HIGH FREQUENCY EDDY CURRENT (HFEC) INSPECTION, THEN REMOVE THE FASTENERS AT THE NDT INSPECTION LOCATION. THEN DO AN OPEN HOLE EDDY CURRENT INSPECTION OF THE WEB AS GIVEN IN NDT MANUAL 51-00-00, PART 6, FIGURE 16.

3. IF YOU FIND ANY CRACKS, CONTACT THE BOEING COMPANY FOR REPAIR INFORMATION.

AA A "BULGE" IS ANY CHANGE OF THE PRESSURE DOME WEB THAT IS AFT OF THE INITIAL CONTOUR. FOR "BULGE" CONDITIONS REFER TO THE "OIL CAN" LIMITATIONS AND REPAIR REQUIREMENTS GIVEN IN GRAPH I AND NOTE W. STEP 8 OF W DOES NOT APPLY.

AB YOU CAN APPLY "OIL CAN" LIMITATIONS AND AND REPAIR REQUIREMENTS TO DENTS. SEE GRAPH I AND W, STEP 8 OF W DOES NOT APPLY.

AC REPAIR AS GIVEN IN SRM 53-10-4, FIGURE 3A IS REQUIRED.

AD REPAIR AS GIVEN IN SRM 53-10-4, FIGURE 3A PREFERRED. REPAIR AS SHOWN IN SRM 53-10-4, FIGURE 5A OPTIONAL PROVIDED STEPS 3. THROUGH 8. OF W ARE MET.

AE IF "OIL CAN" OR DENT REQUIRING REPAIR OCCURS AT OR WITHIN 6.0 INCHES OF CIRCUMFERENTIAL STRAP, REPAIR AS GIVEN IN SRM 53-10-4, FIGURE 3A.

AF ALLOW DENTS AS GIVEN IN DETAIL XVIII. DENTS MUST NOT EXTEND ACROSS ANY ATTACHED STRUCTURE, DENTS MUST SHOW NO INDICATION OF "OIL CAN".

Allowable Damage - Main Frame
Figure 1 (Sheet 3)

BOEING PROPRIETARY - Copyright © - Unpublished Work - See title page for details.

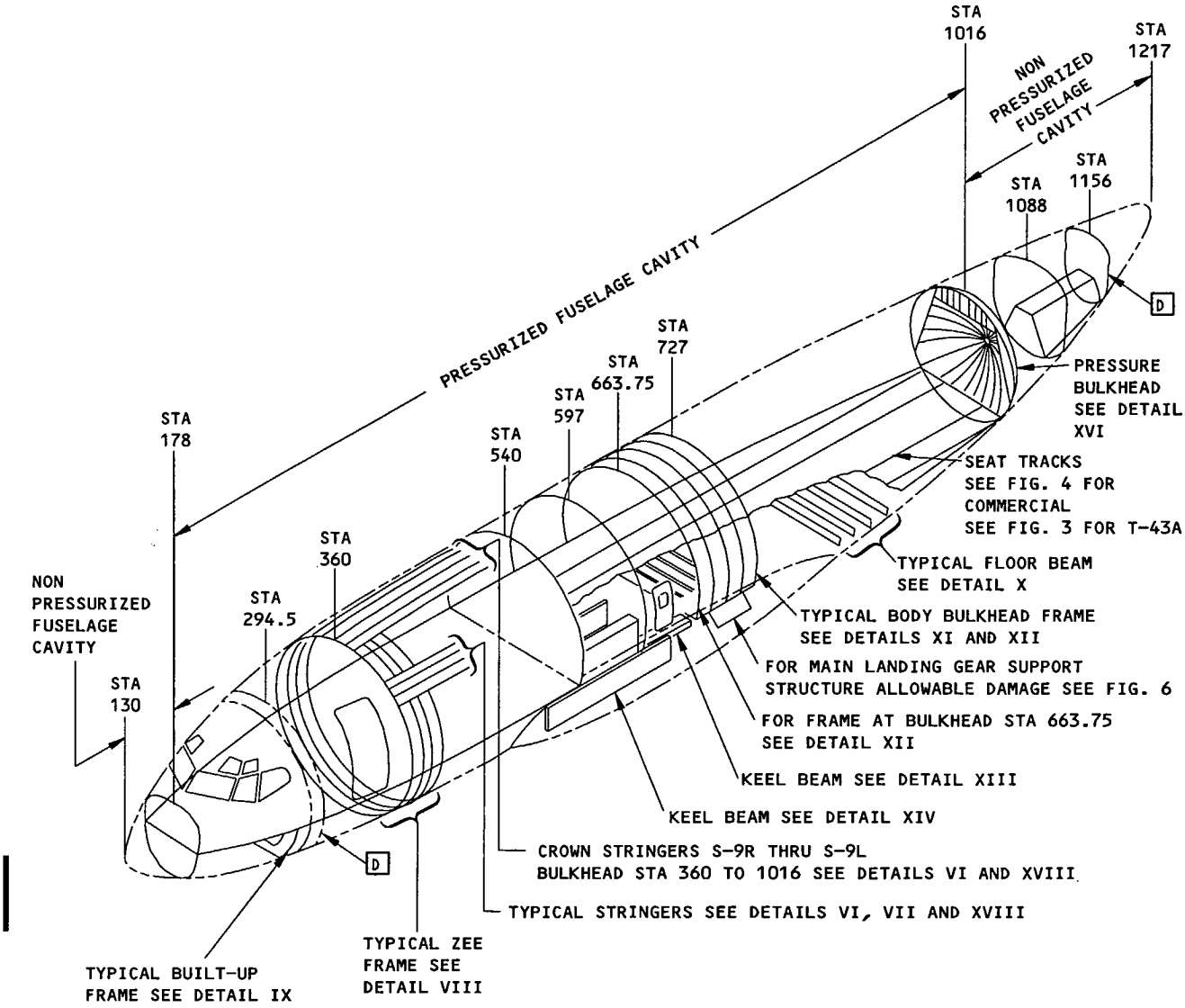

Allowable Damage - Main Frame
Figure 1 (Sheet 4)

BOEING PROPRIETARY - Copyright © - Unpublished Work - See title page for details.

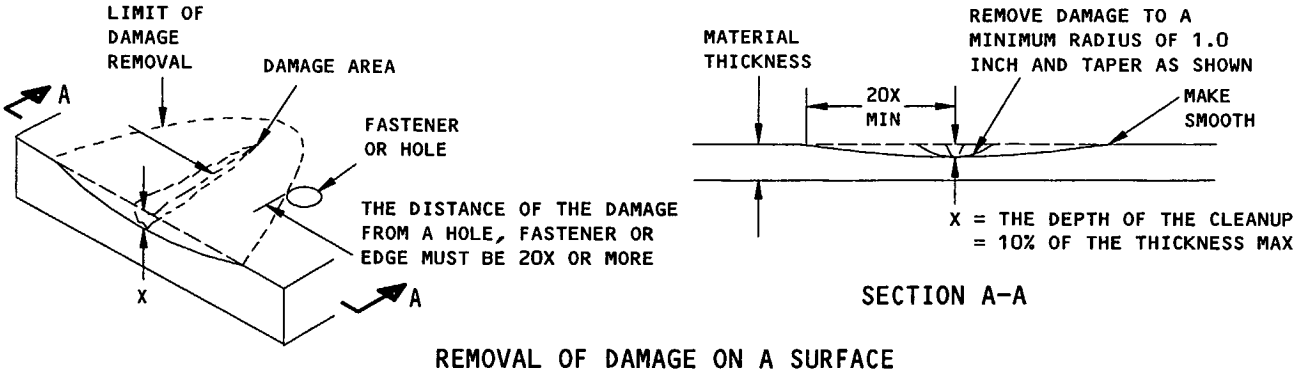

SECTION A-A

REMOVAL OF DAMAGE ON A SURFACE

DETAIL I

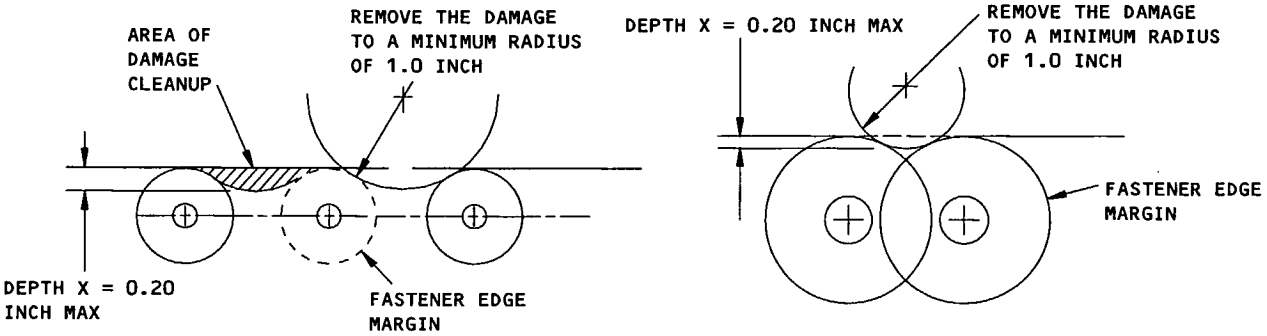

REMOVAL OF DAMAGE AT EDGES WHERE FASTENER EDGE MARGINS DO NOT OVERLAP

REMOVAL OF DAMAGE AT EDGES WHERE FASTENER EDGE MARGINS OVERLAP

DETAIL II

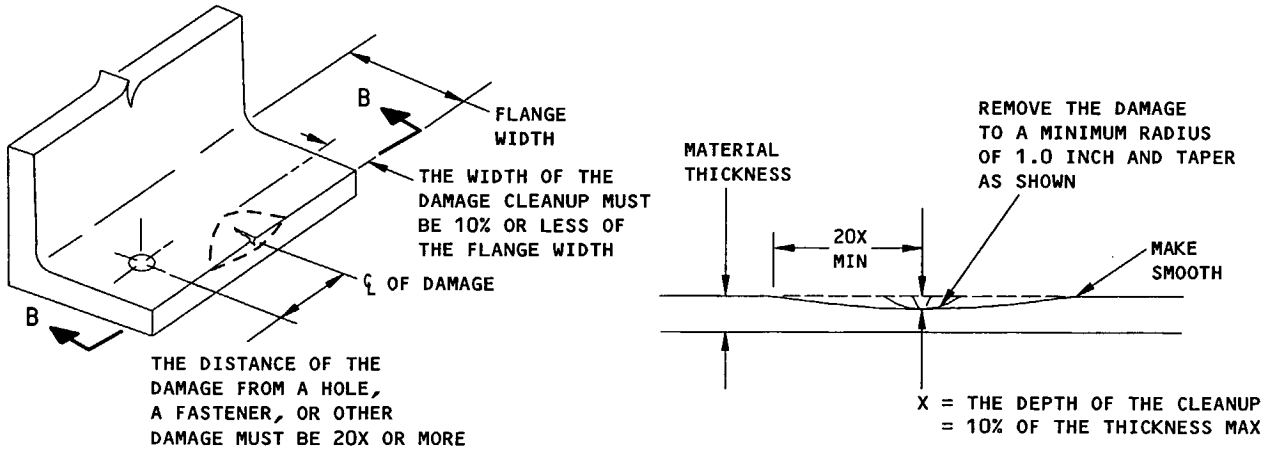

REMOVAL OF DAMAGE ON A SURFACE

DETAIL III

Allowable Damage - Main Frame
Figure 1 (Sheet 5)

BOEING PROPRIETARY - Copyright © - Unpublished Work - See title page for details.

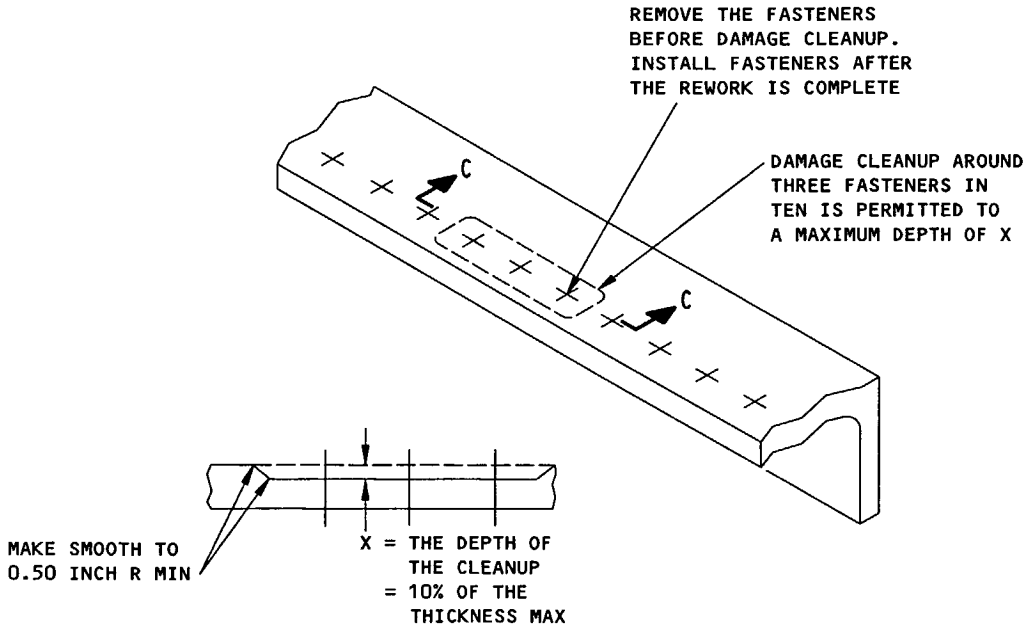

SECTION C-C

REMOVAL OF CORROSION DAMAGE
DETAIL IV

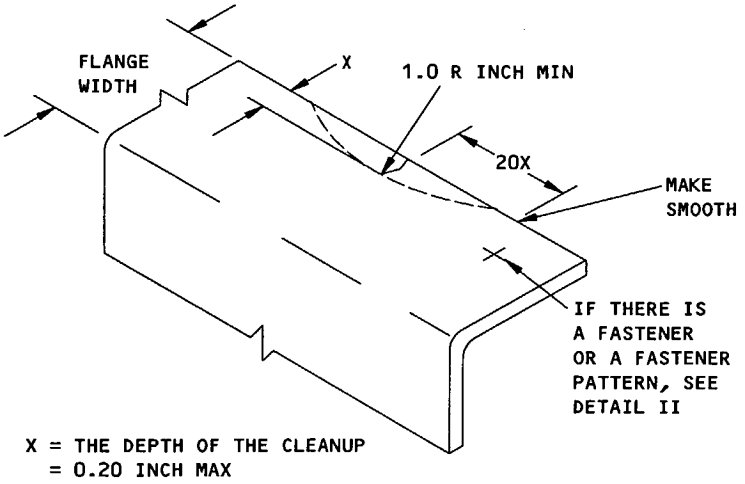

REMOVAL OF DAMAGE ON AN EDGE
DETAIL V

Allowable Damage - Main Frame
Figure 1 (Sheet 6)

BOEING PROPRIETARY - Copyright © - Unpublished Work - See title page for details.

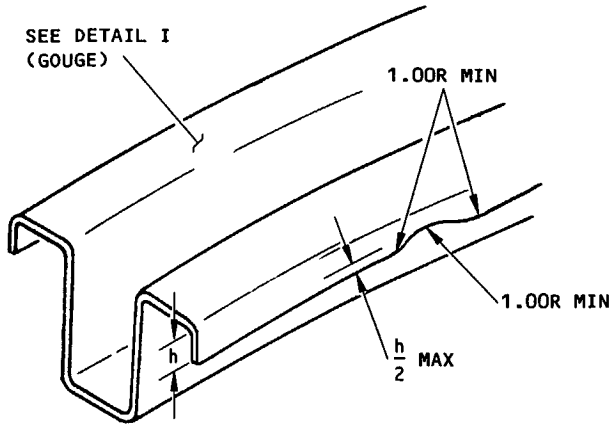

CLEAN UP OF DAMAGE TO
NONCROWN STRINGERS [H][T][U]

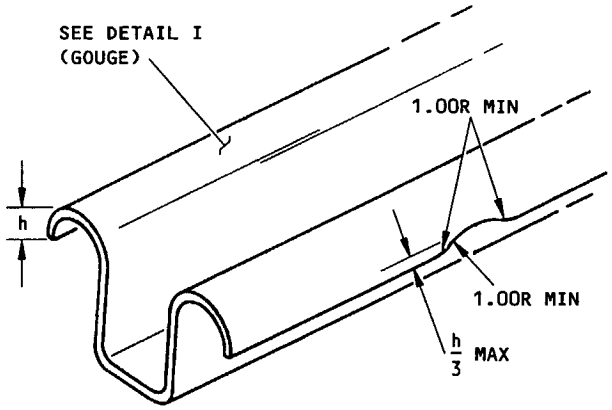

CLEAN UP OF DAMAGE TO
CROWN STRINGERS [A][S][U]

DETAIL VI

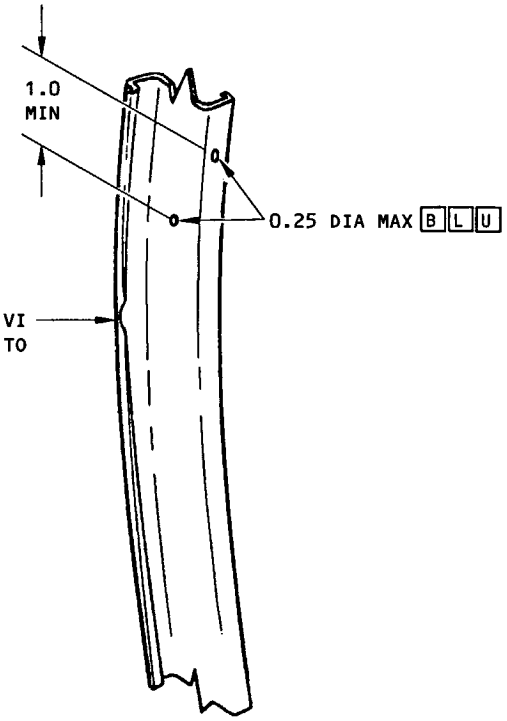

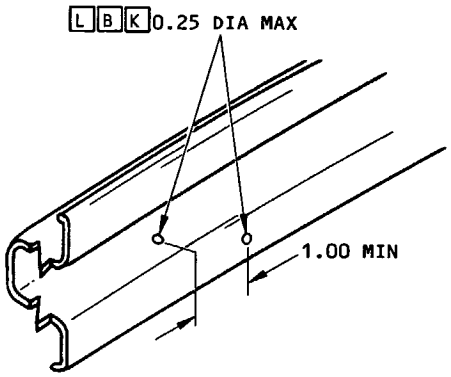

HOLES PERMITTED FOR DAMAGE
REMOVAL IN NONCROWN STRINGERS

DETAIL VII [J]

DAMAGE REMOVAL IN
FORMED ZEE FRAMES

DETAIL VIII

Allowable Damage - Main Frame
Figure 1 (Sheet 7)

BOEING PROPRIETARY - Copyright © - Unpublished Work - See title page for details.

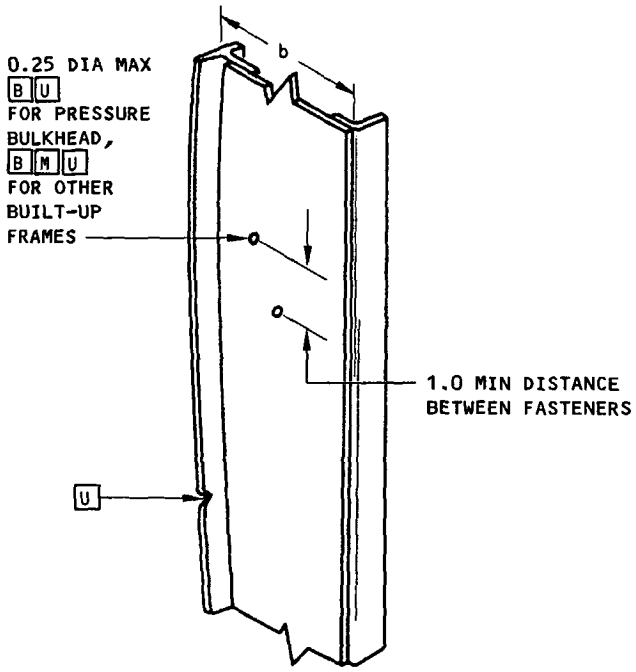

DAMAGE REMOVAL IN
TYPICAL BUILT-UP FRAMES
DETAIL IX

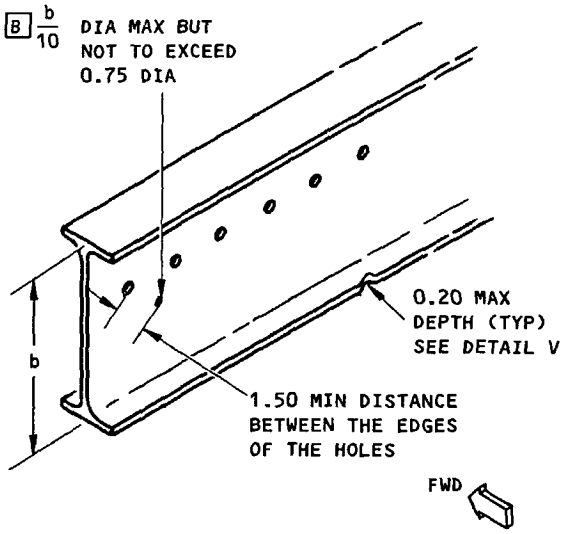

DAMAGE REMOVAL IN FLOOR BEAMS
DETAIL X

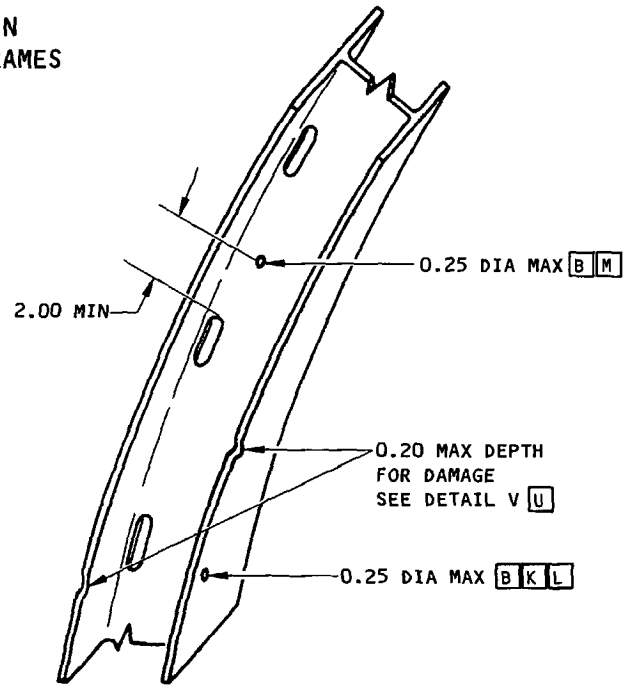

DAMAGE REMOVAL IN FRAMES
THAT ARE NOT BUILT-UP
DETAIL XI

Allowable Damage - Main Frame
Figure 1 (Sheet 8)

BOEING PROPRIETARY - Copyright © - Unpublished Work - See title page for details.

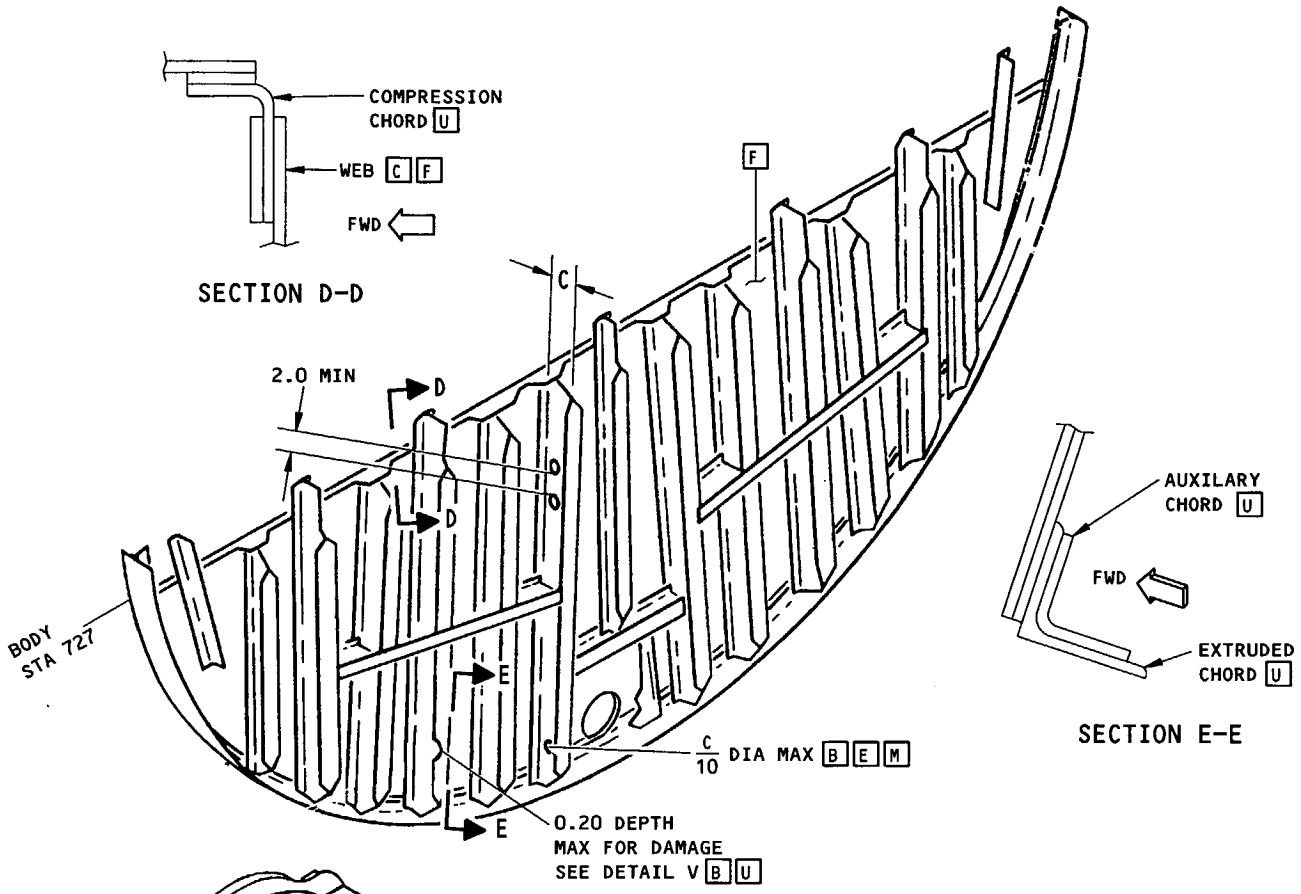

DAMAGE REMOVAL IN BS 727 BULKHEAD
DETAIL XII

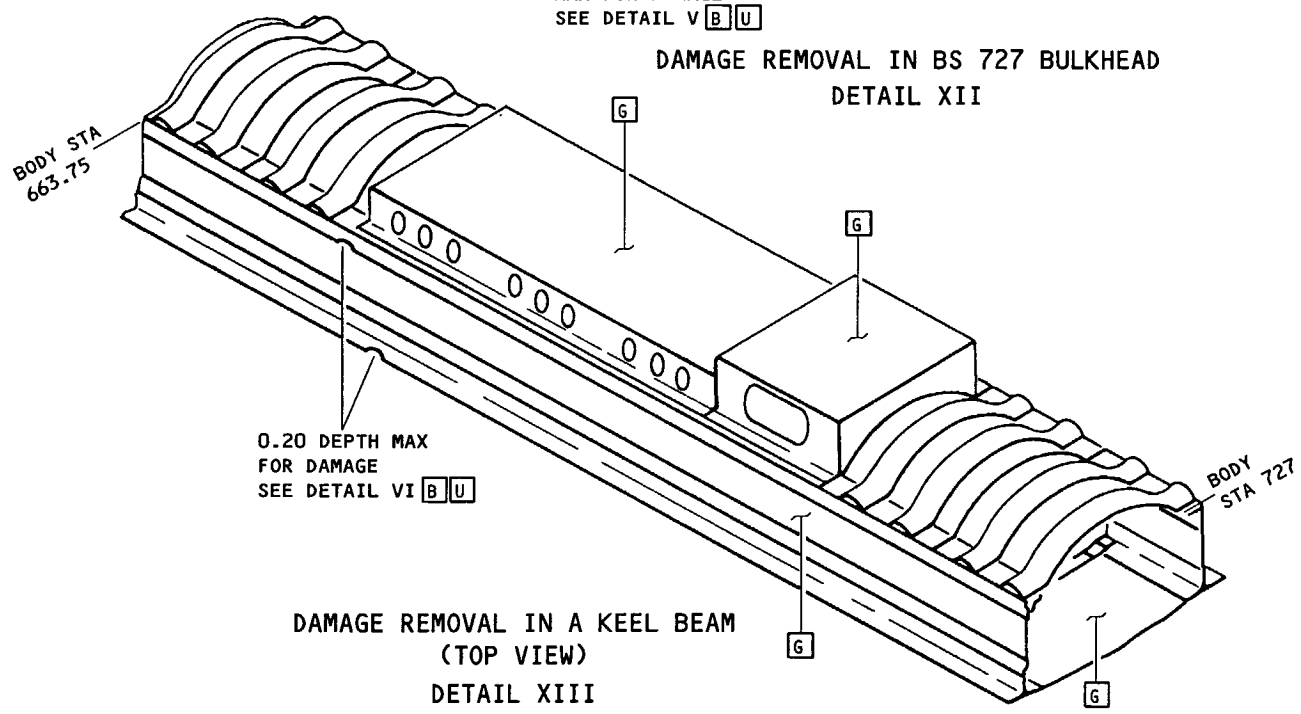

DAMAGE REMOVAL IN A KEEL BEAM
(TOP VIEW)
DETAIL XIII

Allowable Damage - Main Frame
Figure 1 (Sheet 9)

BOEING PROPRIETARY - Copyright © - Unpublished Work - See title page for details.

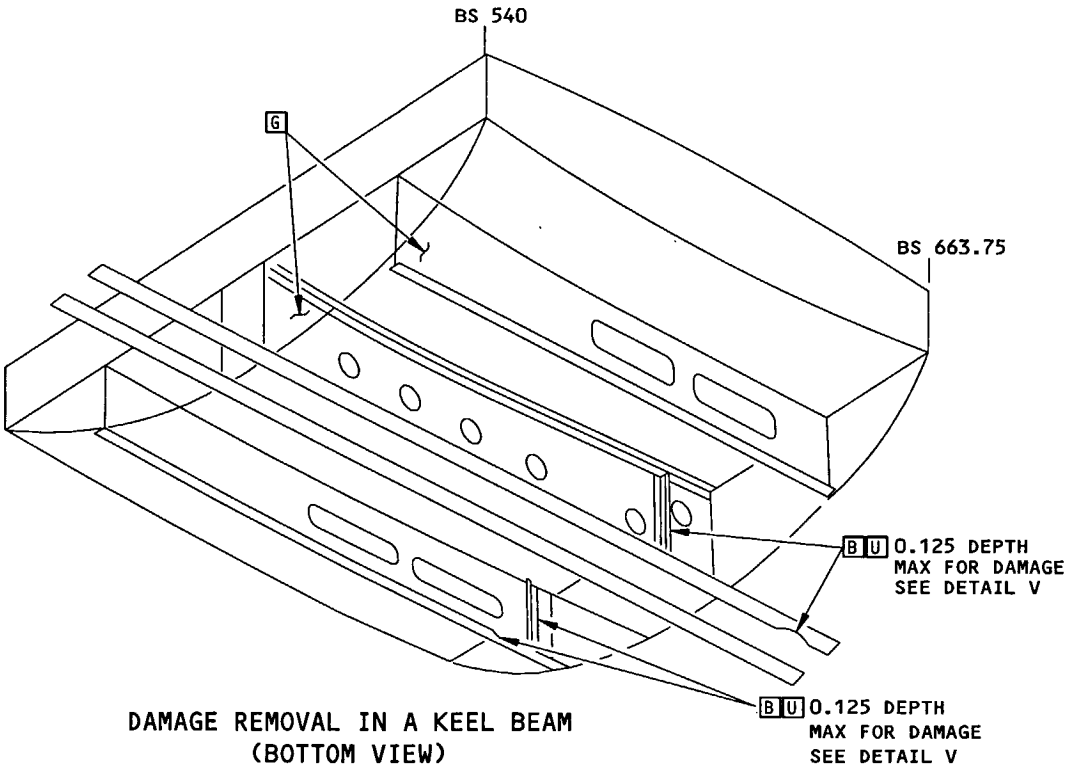

DAMAGE REMOVAL IN A KEEL BEAM
(BOTTOM VIEW)
DETAIL XIV

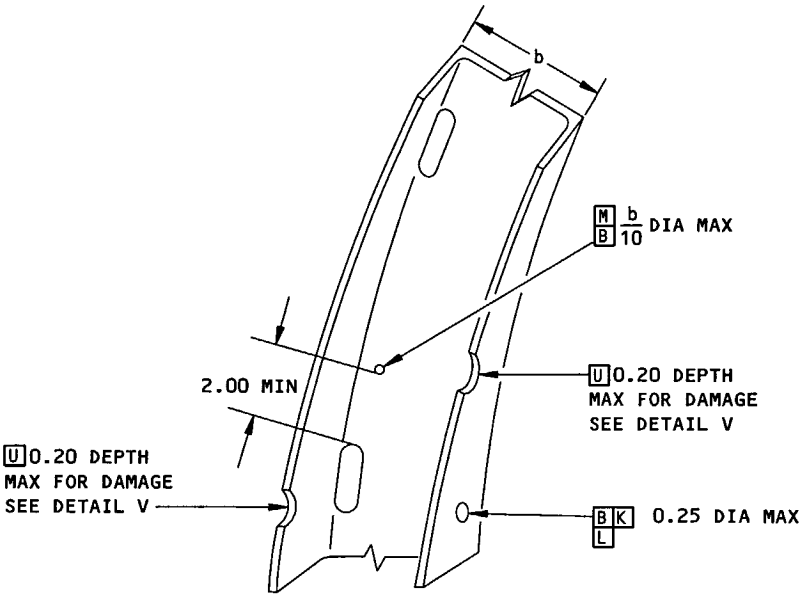

DAMAGE REMOVAL IN THE BULKHEAD FRAME AT BS 663.75
DETAIL XV

Allowable Damage - Main Frame
Figure 1 (Sheet 10)

BOEING PROPRIETARY - Copyright © - Unpublished Work - See title page for details.

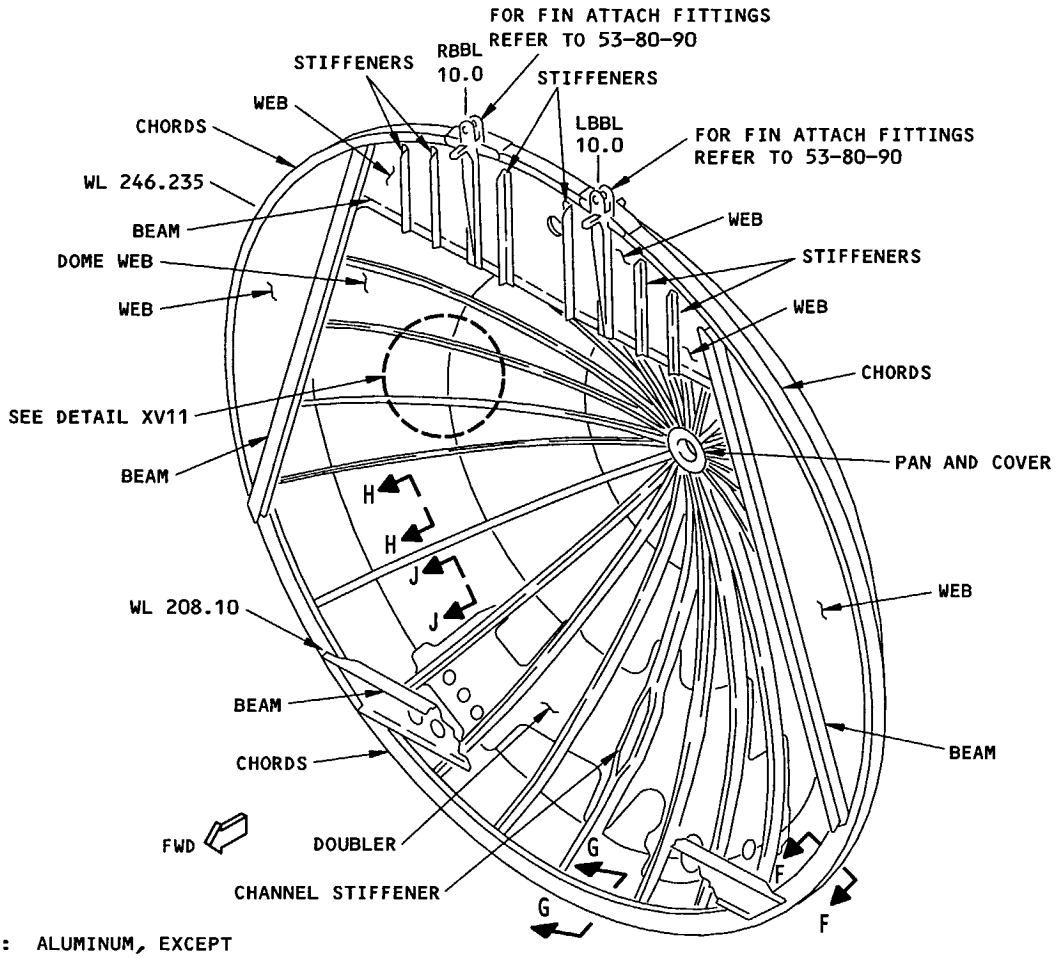

MATERIAL: ALUMINUM, EXCEPT AS NOTED

BS 1016 BULKHEAD
DETAIL XVI

DESCRIPTION	CRACKS	NICKS, GOUGES, SCRATCHES AND CORROSION	DENTS	HOLES AND PUNCTURES	"OIL CANS" AND BULGES
CHORDS	NOT ALLOWED	K O R	NOT ALLOWED	NOT ALLOWED	----
DOME WEB AND DOUBLER, STRAPS	NOT ALLOWED	C K R	R AB	NOT ALLOWED	W AA
PAN AND COVER	NOT ALLOWED	C K R	NOT ALLOWED	K R	----
WEBS OTHER THAN DOME WEB	NOT ALLOWED	K U	AF	K L	----
SPLICE ANGLES	NOT ALLOWED	K Q	NOT ALLOWED	NOT ALLOWED	----
STIFFENERS AND BEAMS	NOT ALLOWED	K R U	NOT ALLOWED	K M	----

ALLOWABLE DAMAGE FOR BS 1016 PRESSURE BULKHEAD

Allowable Damage - Main Frame
Figure 1 (Sheet 11)

BOEING PROPRIETARY - Copyright © - Unpublished Work - See title page for details.

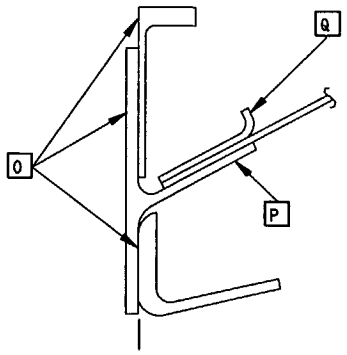

BS
1016
SECTION F-F

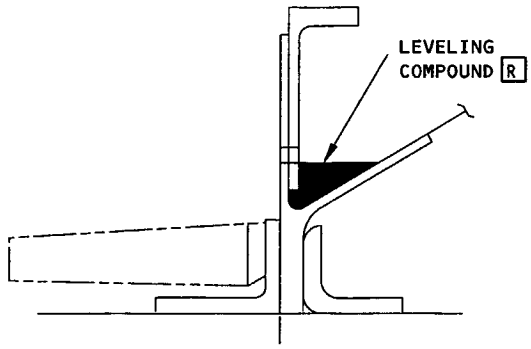

BS
1016
SECTION G-G

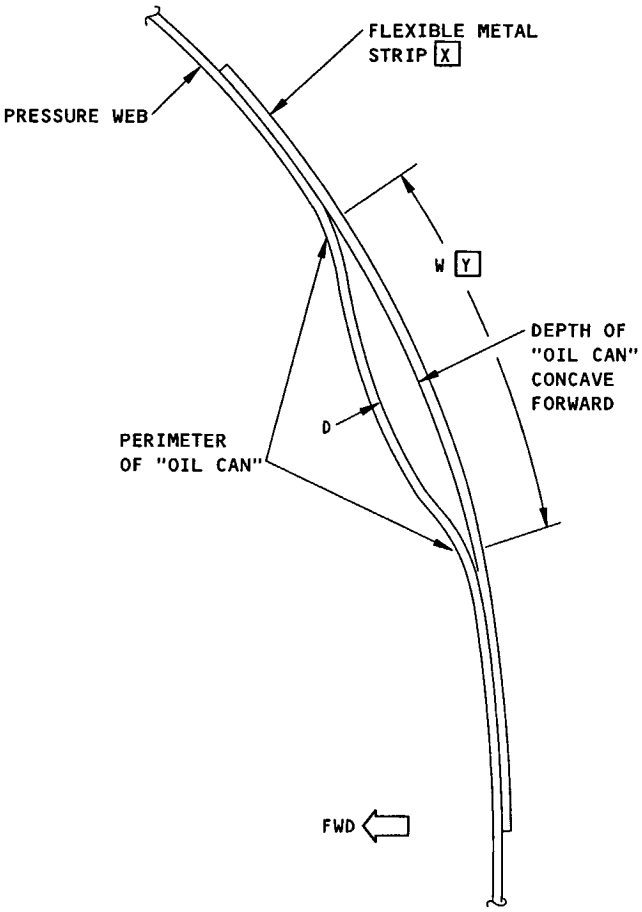

MEASURING DEPTH AND WIDTH OF "OIL CANS" IN PRESSURE BULKHEAD W

SECTION H-H

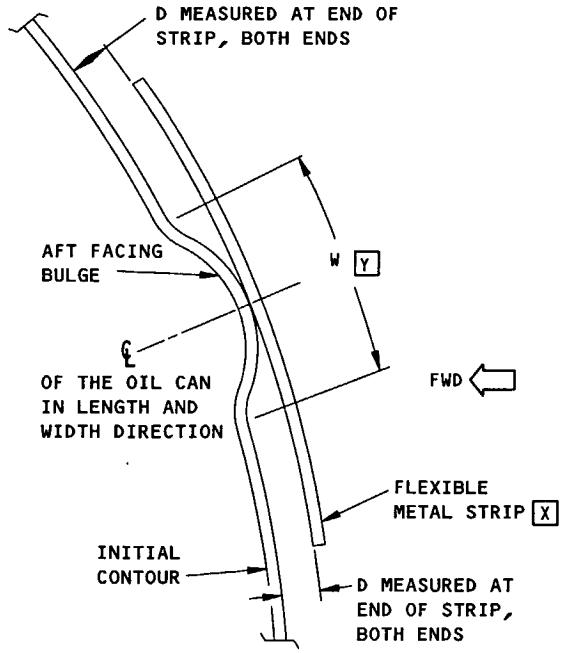

MEASURING DEPTH AND WIDTH OF "BULGES" IN PRESSURE BULKHEAD

SECTION J-J AA

Allowable Damage - Main Frame
Figure 1 (Sheet 12)

BOEING PROPRIETARY - Copyright © - Unpublished Work - See title page for details.

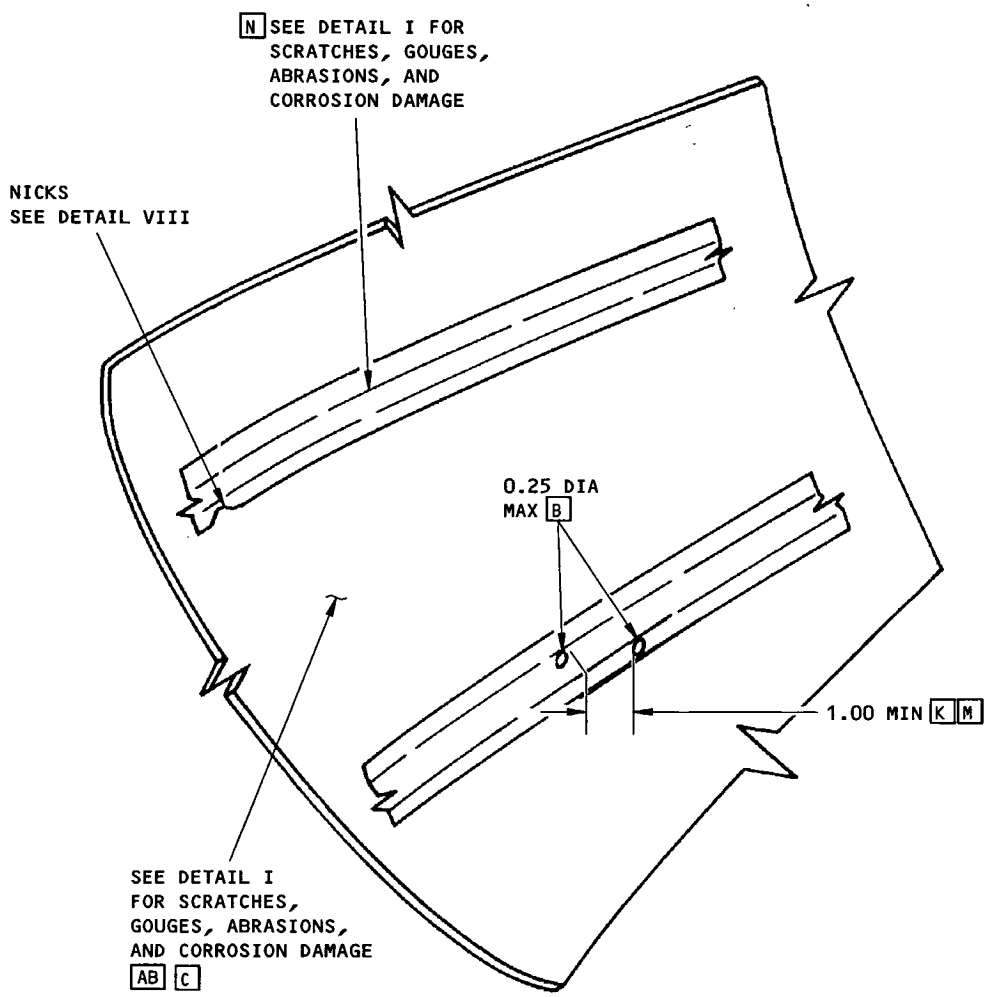

DETAIL XVII

Allowable Damage - Main Frame
Figure 1 (Sheet 13)

BOEING PROPRIETARY - Copyright © - Unpublished Work - See title page for details.

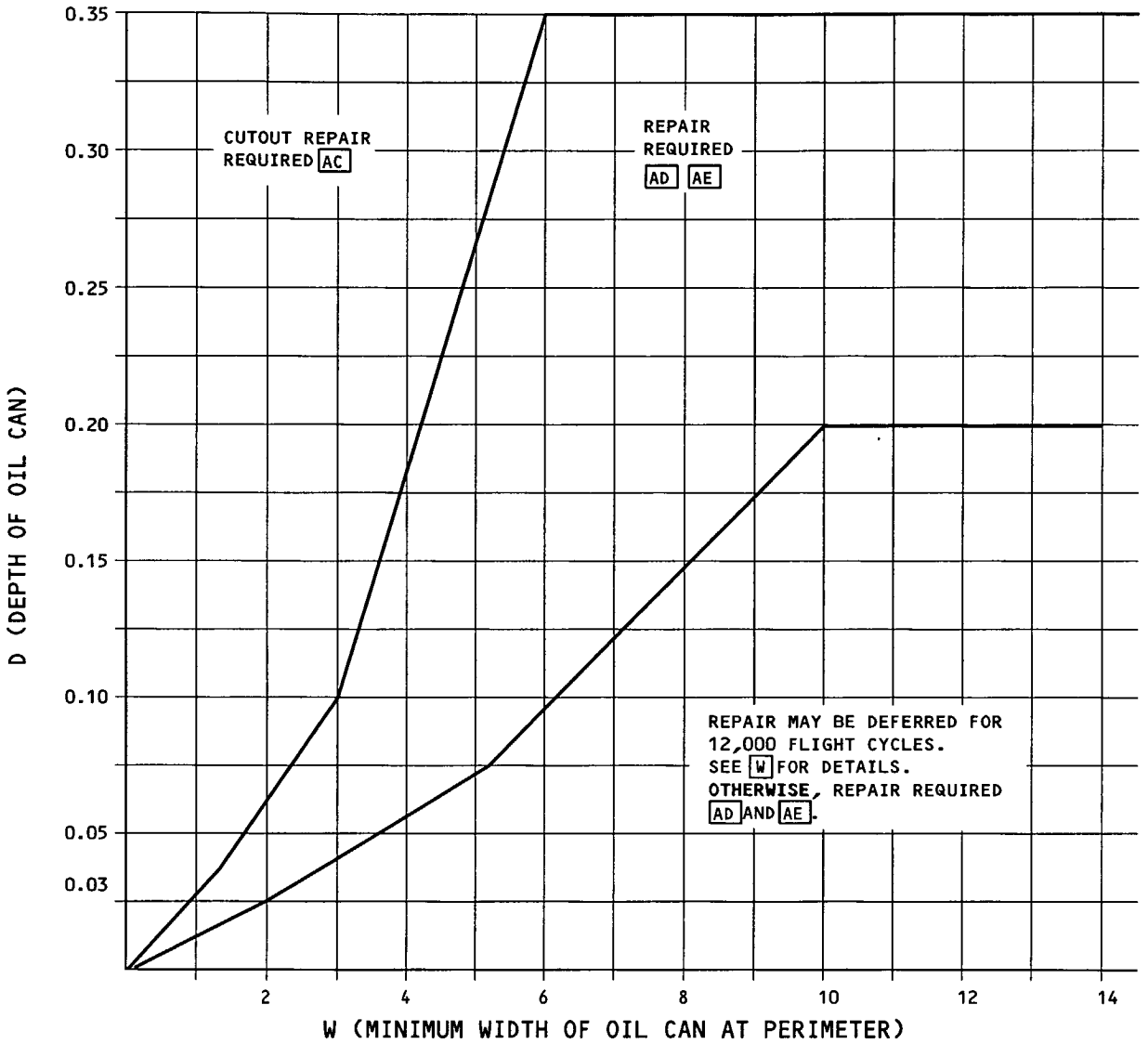

DENT, BULGE AND "OIL CAN" LIMITATIONS AND REPAIR REQUIREMENTS ON PRESSURE BULKHEAD W
GRAPH I

Allowable Damage - Main Frame
Figure 1 (Sheet 14)

BOEING PROPRIETARY - Copyright © - Unpublished Work - See title page for details.

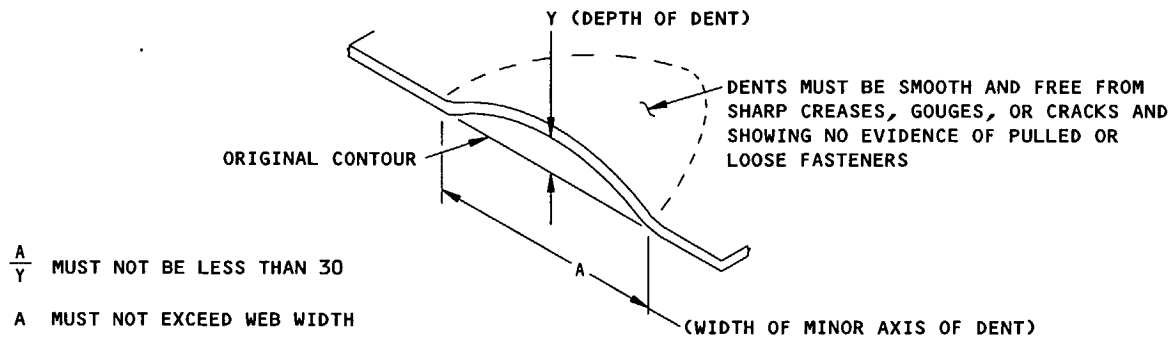

STRINGER DENT ALLOWABLE DAMAGE ONLY [V]
DETAIL XVIII

Allowable Damage - Main Frame
Figure 1 (Sheet 15)

BOEING PROPRIETARY - Copyright © - Unpublished Work - See title page for details.

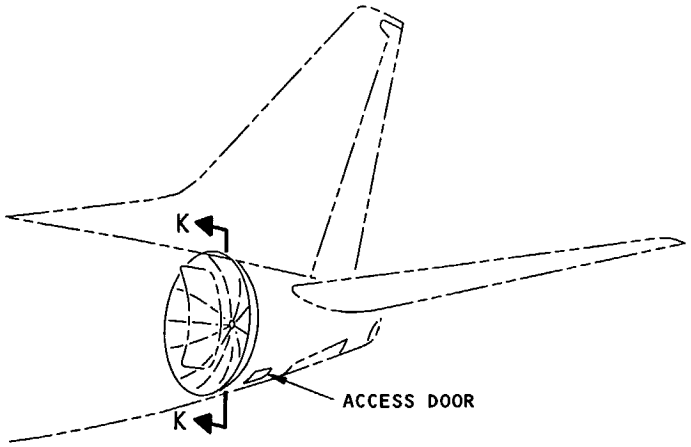

LFEC INSPECTION OF THE WEB AT THE Y-CHORD
DETAIL XIX

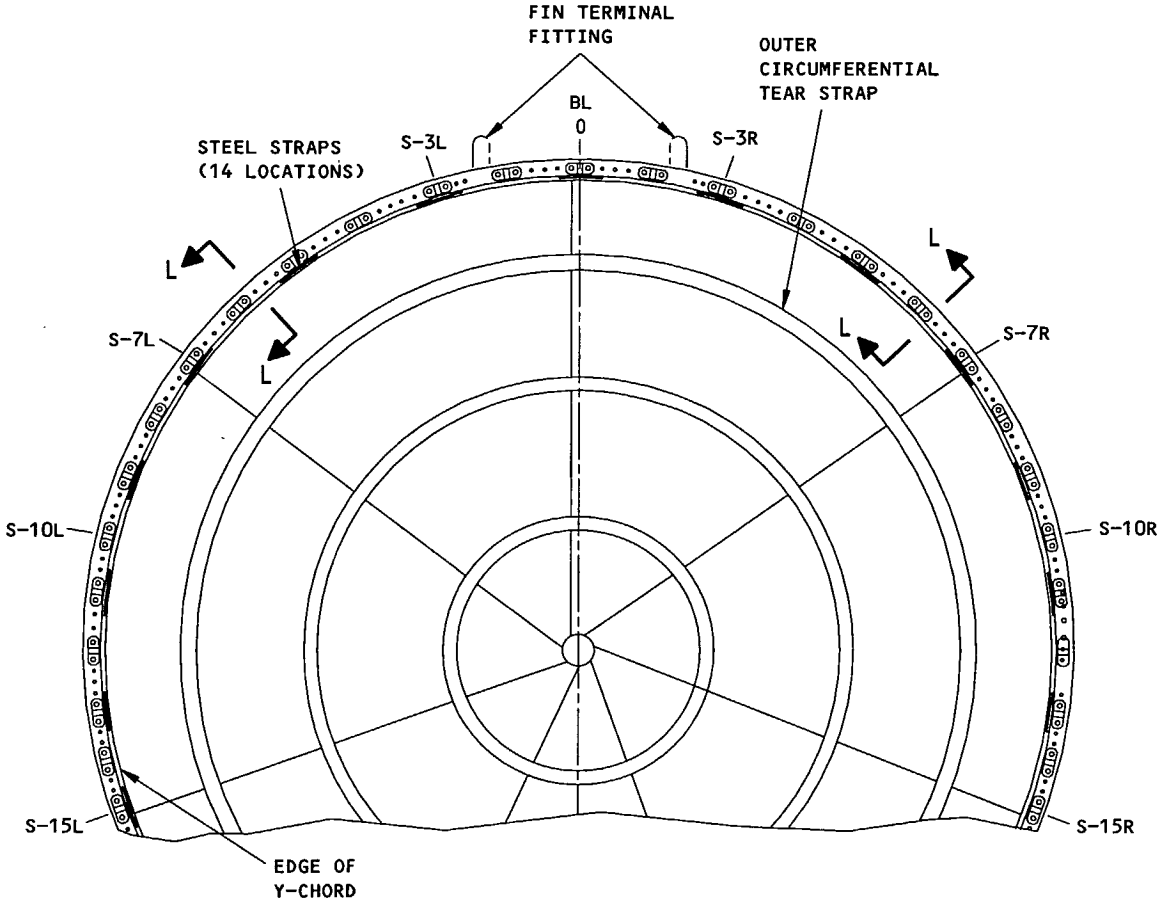

VIEW LOOKING FORWARD
K-K

Allowable Damage - Main Frame
Figure 1 (Sheet 16)

BOEING PROPRIETARY - Copyright © - Unpublished Work - See title page for details.

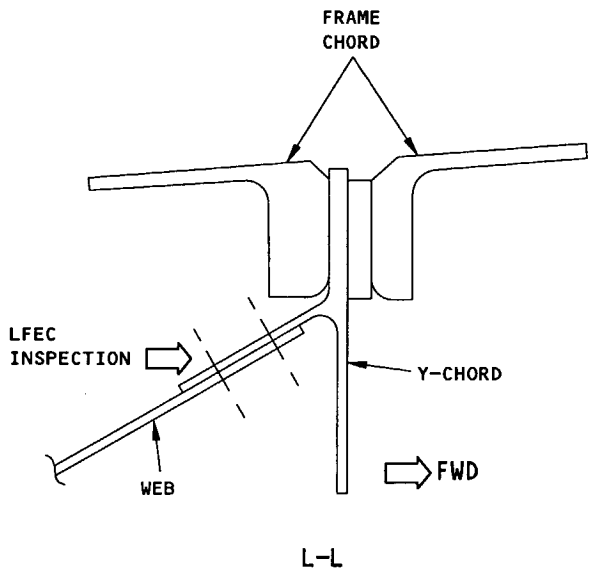

Allowable Damage - Main Frame
Figure 1 (Sheet 17)

BOEING PROPRIETARY - Copyright © - Unpublished Work - See title page for details.

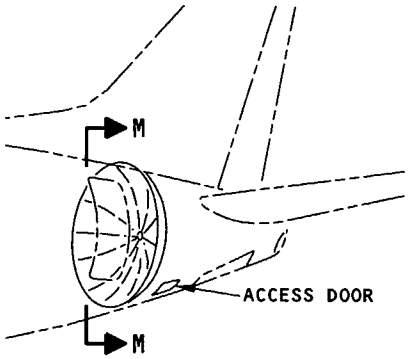

NDT INSPECTION OF THE WEB AT THE Y-CHORD DETAIL XX

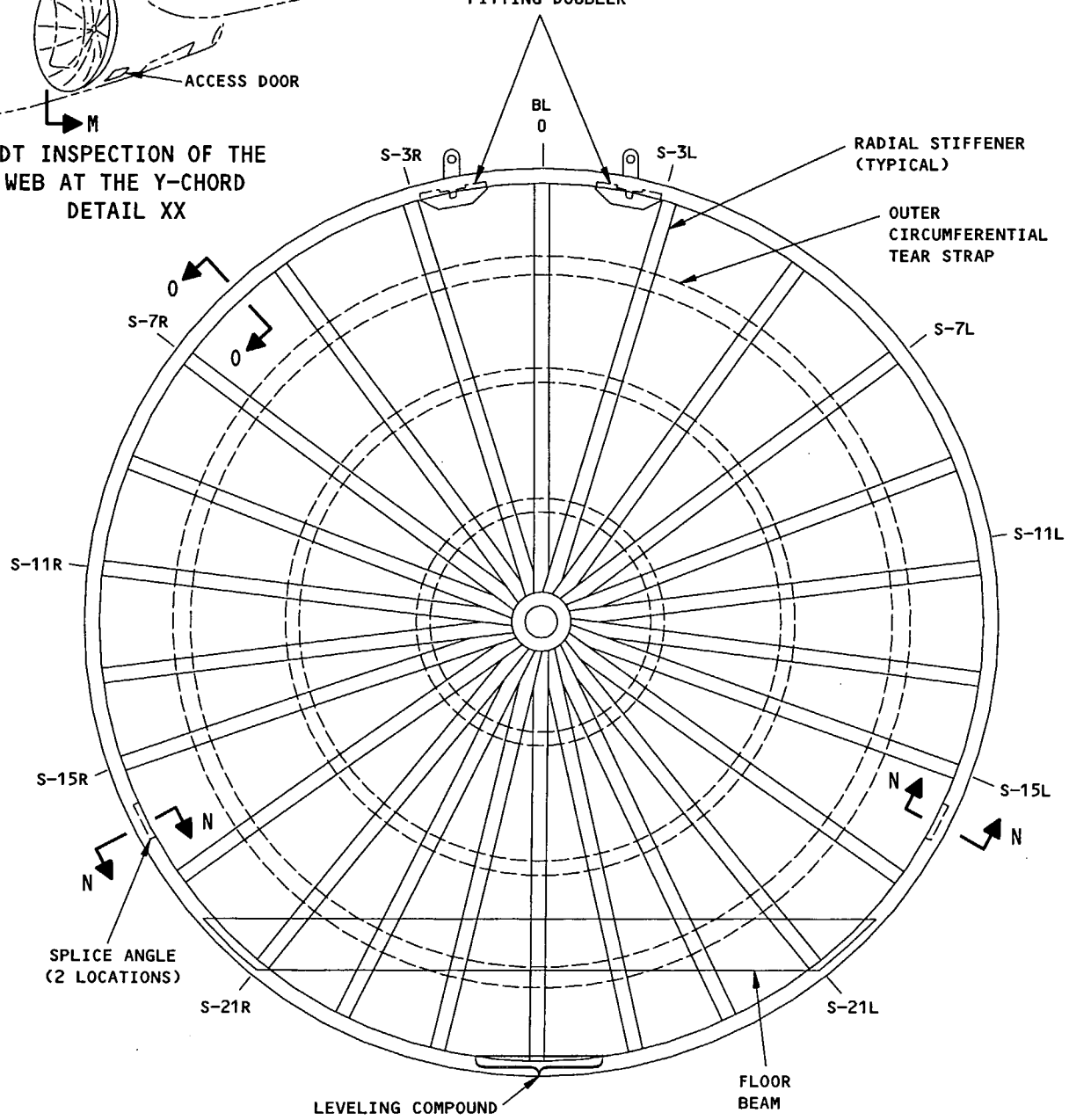

VIEW LOOKING AFT
M-M

Allowable Damage - Main Frame
Figure 1 (Sheet 18)

BOEING PROPRIETARY - Copyright © - Unpublished Work - See title page for details.

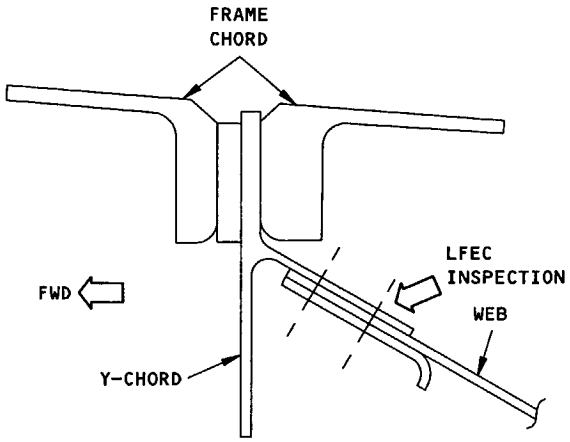

N-N

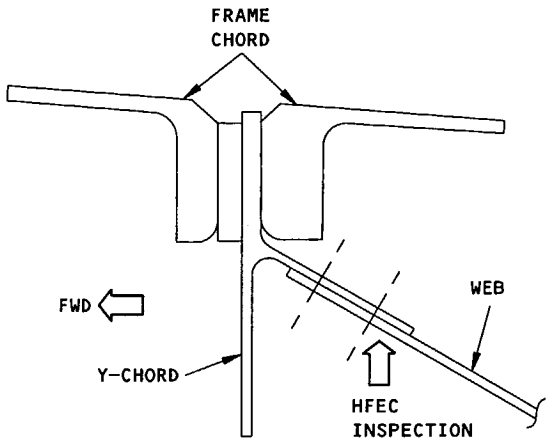

O-O

Allowable Damage - Main Frame
Figure 1 (Sheet 19)

BOEING PROPRIETARY - Copyright © - Unpublished Work - See title page for details.

REPAIR INSTRUCTIONS

1. Remove the gouges, burrs and corrosion from the fitting. Use aluminum oxide abrasive paper or the equivalent as given in SRM 51-10-1.
2. Remove the rework residue with a vacuum.
3. Solvent clean the reworked area.
4. Apply a chemical conversion coating as given in SRM 51-10-2.
5. Apply a finish layer of BMS 10-11, Type I primer.

NOTES

- THE ALLOWABLE DAMAGE LIMITS GIVEN IN THIS FIGURE WILL NOT HAVE AN EFFECT ON A STRUCTURALLY SIGNIFICANT ITEM (SSI) GIVEN IN SRM 51-00-4, FIG.3. THUS, NO CHANGE TO THE SUPPLEMENTAL STRUCTURAL INSPECTION DOCUMENT (SSID) INSPECTION PROGRAM IS NECESSARY.
- CRACKS ARE NOT PERMITTED.
- HOLES THAT ARE NOT NECESSARY FOR MANUFACTURE ARE NOT PERMITTED.
- IF THE DAMAGE IS MORE THAN THESE LIMITS, YOU MUST REPLACE THE FITTING.

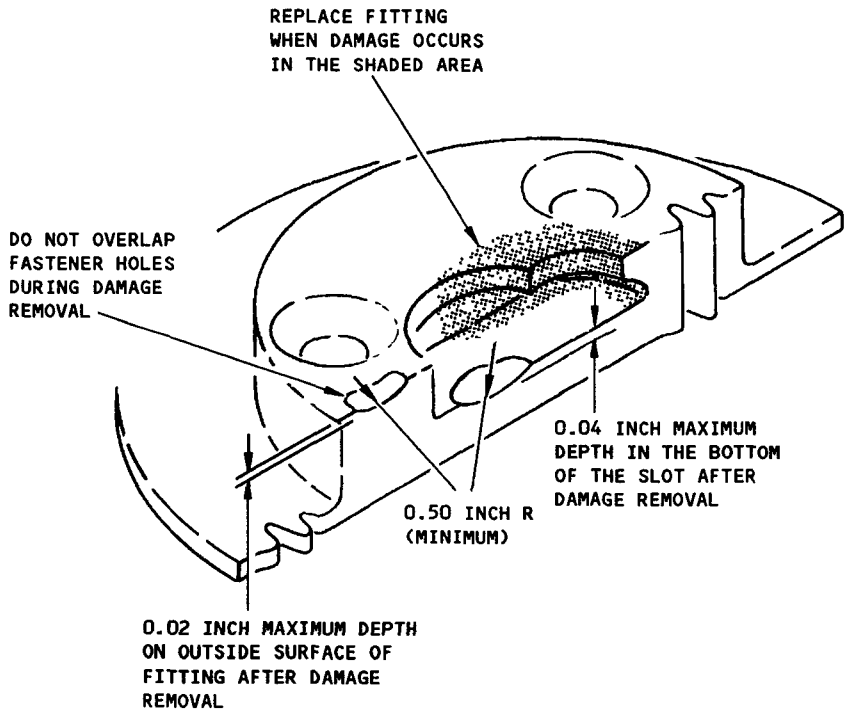

Allowable Damage - Cargo Tie Down Fitting
Figure 2

BOEING PROPRIETARY - Copyright © - Unpublished Work - See title page for details.

EFFECTIVITY

737 QC AIRPLANES ONLY

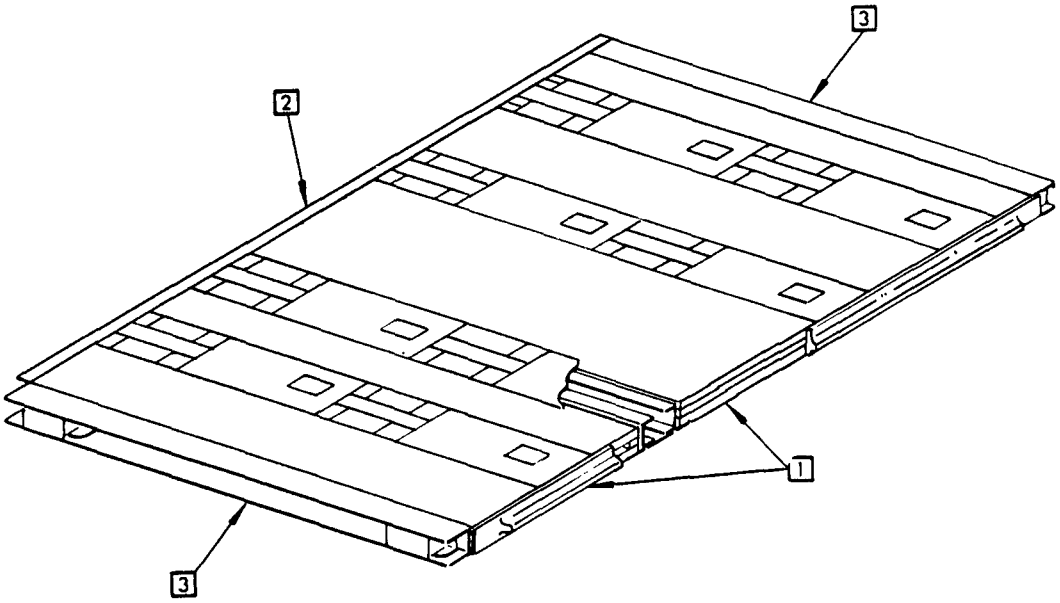

FLOOR PALLET
(TYPICAL)

ALLOWABLE DAMAGE INDEX					
ITEM	LOCATION OF DAMAGE	TYPE OF DAMAGE			
		SCRATCHES, NICKS & GOUGES	CRACKS	DENTS	HOLES
1	FORWARD EDGE	SEE DETAIL I & IV A B	SEE DETAIL I & IV C	SEE DETAIL III E	SEE DETAIL I & IV D
2	AFT EDGE	SEE DETAIL II & IV A B	SEE DETAIL II & IV C	SEE DETAIL II & III E	SEE DETAIL II & IV D
3	SIDE RAILS	SEE DETAIL III & IV A	SEE DETAIL III & IV C	SEE DETAIL III E	SEE DETAIL IV D

Allowable Damage - Seat and Galley Floor Pallets
Figure 3 (Sheet 1 of 6)

NOTES

- THE ALLOWABLE DAMAGE LIMITS GIVEN IN THIS FIGURE WILL NOT HAVE AN EFFECT ON A STRUCTURALLY SIGNIFICANT ITEM (SSI) GIVEN IN SRM 51-00-4, FIG. 3. THUS, NO CHANGE TO THE SUPPLEMENTAL STRUCTURAL INSPECTION DOCUMENT (SSID) INSPECTION PROGRAM IS NECESSARY.
- REFER TO SRM 51-10-1, PARAGRAPH 2 FOR GENERAL REPAIR PROCEDURES.
- REFER TO SRM 51-30-6 FOR EDGE MARGIN REQUIREMENTS.
- FOR CLEAN UP OF CORROSION DAMAGE REFER TO SRM 51-10.
- APPLY METAL PROTECTIVE TREATMENT AS GIVEN IN SRM 51-10-2 AFTER CLEAN UP OF ALLOWABLE DAMAGE.
- SUPERFICIAL DAMAGE WHICH DOES NOT PENETRATE THROUGH THE CLADDED SURFACES MAY BE IGNORED.
- DAMAGE GREATER THAN THAT TABULATED IN NOTES [A] THROUGH [E] MUST BE REPAIRED.

[A] SCRATCHES, NICKS AND GOUGES WHICH ARE NOT IN EXCESS OF 0.05 INCH DEEP ARE CONSIDERED ALLOWABLE. RAGGED BOUNDARIES OF SUCH DAMAGED AREAS MUST BE CLEANED UP BEFORE PALLET IS PUT BACK INTO SERVICE. SCRATCHES, NICKS AND GOUGES HAVING A GREATER DEPTH THAN THE FOREGOING MUST BE CLEANED OUT AND BLENDED TO THE SURROUNDING PROFILE TO PROVIDE A SMOOTH SURFACE. THE MAXIMUM AMOUNT OF THE MATERIAL REMOVED DURING THESE OPERATIONS MUST NOT EXCEED THE LIMITS SHOWN IN DETAILS I, II, III & IV.

[B] ABRADED CORNERS AND EDGES WHICH PRESENT A SMOOTH APPEARANCE AND WHICH ARE NOT IN EXCESS OF 0.15 INCH DEEP ARE CONSIDERED ALLOWABLE. RAGGED BOUNDARIES OF SUCH DAMAGE MUST BE CLEANED UP TO PROVIDE A SMOOTH SURFACE BEFORE PALLET IS RETURNED TO SERVICE. DAMAGE IN EXCESS OF THIS MUST BE CLEANED OUT AS SHOWN IN DETAILS I & II.

[C] CRACKS IN THE EDGES OF EXTRUSIONS, NOT GREATER THAN 0.125 INCH LONG, MUST BE CLEANED OUT AND BLENDED TO THE PROFILE OF THE SURROUNDING MATERIAL. ALL CONCERNS MUST BE RADIUSED 0.25 INCH AND ALL SHARP EDGES MUST BE RADIUSED 0.030 INCH. CRACKS WHICH ARE LONGER THAN 0.125 INCH, BUT WHICH DO NOT PENETRATE MORE THAN ONE THIRD OF THE LOCAL CROSS-SECTIONAL DIMENSION (D) MUST BE CLEANED OUT AS SHOWN IN DETAIL IV. CRACKS IN EXCESS OF THE FOREGOING MUST BE REPAIRED.

[D] MINOR DAMAGE IN THE FREE-STANDING FLANGES OF EXTRUSIONS MAY BE CLEANED OUT BY DRILLING, PROVIDED THE RESULTING HOLE DOES NOT HAVE A DIAMETER GREATER THAN 0.250 INCH, THAT FASTENER EDGE MARGINS ARE MAINTAINED AND THAT NO HOLE IS LESS THAN 0.125 INCH FROM THE EDGE OF THE EXTRUSION. IF THE RESULTING HOLE IS LESS THAN 0.125 INCH FROM THE EXTRUSION EDGE, THE DAMAGE MUST BE CLEANED OUT AS SHOWN IN DETAIL IV.

Allowable Damage - Seat and Galley Floor Pallets
Figure 3 (Sheet 2 of 6)

BOEING PROPRIETARY - Copyright © - Unpublished Work - See title page for details.

EFFECTIVITY

737 QC AIRPLANES ONLY

[E] DENTS ON FLAT SURFACES HAVING A MAXIMUM DEPTH OF .125 INCH, WHICH DO NOT DEFORM LOCAL MATING SURFACES, THAT ARE FREE FROM CRACKS AND TEARS AND DO NOT REDUCE A LOCAL EDGE MARGIN ARE CONSIDERED ALLOWABLE. ANY RAISED OR DEFORMED MATERIAL NOT EXCEEDING .06 INCH IN THE REGION OF ANY DENT MUST BE RESTORED TO ORIGINAL CONTOUR.

DENTS NOT DEEPER THAN .06 INCH IN THE FREE-STANDING FLANGES OF EXTRUSIONS AND WHICH ARE NOT SURROUNDED BY RAISED OR DEFORMED MATERIAL ARE CONSIDERED ALLOWABLE. ANY RAISED OR DEFORMED MATERIAL NOT EXCEEDING .06 INCH IN THE REGION OF ANY DENT MUST BE RESTORED TO ORIGINAL CONTOUR. DENTS OF A GREATER DEPTH THAN THE FOREGOING OR WHICH HAVE TORN OR CRACKED SURFACES MUST BE CLEANED OUT AND REPAIRED.

Allowable Damage - Seat and Galley Floor Pallets
Figure 3 (Sheet 3 of 6)

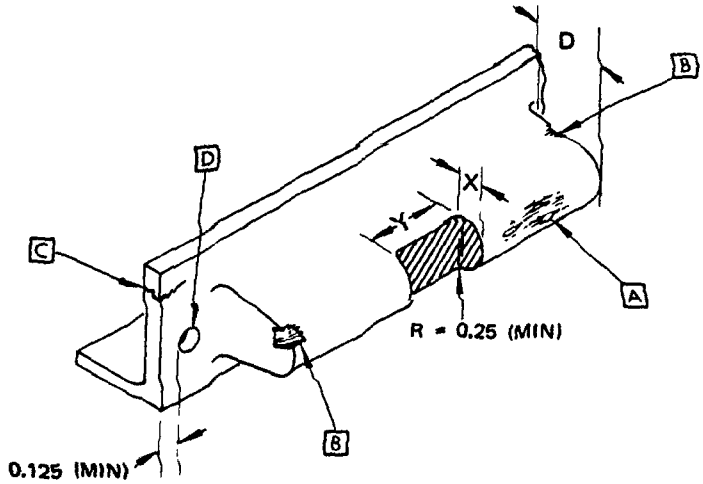

FORWARD EDGE

DIMENSION X - 1/3 CROSS-SECTIONAL WIDTH (D) OF LOCATING BLOCK (MAXIMUM DEPTH OF CLEANOUT)

DIMENSION Y - LENGTH AS REQUIRED TO CLEAN OUT LOCAL DAMAGE. MAXIMUM CUTOUT LENGTH NOT TO EXCEED 2.00 INCHES. TOTAL LENGTH OF CLEANED OUT SECTIONS NOT TO EXCEED 1/6 OF TOTAL LENGTH OF FWD EDGE.

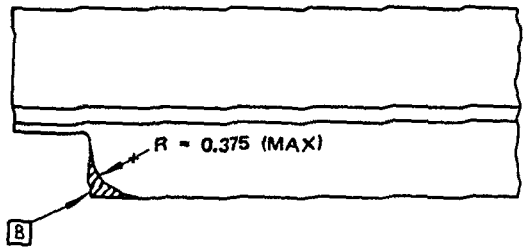

VIEW LOOKING DOWN

DETAIL I

Allowable Damage - Seat and Galley Floor Pallets
Figure 3 (Sheet 4 of 6)

EFFECTIVITY
737 QC AIRPLANES ONLY

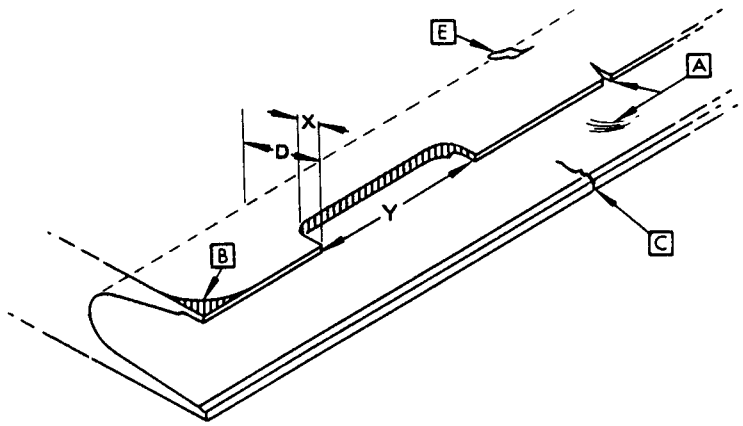

DIMENSION X - 1/3 CROSS-SECTIONAL WIDTH (D) OF LIP

DIMENSION Y - LENGTH AS REQUIRED TO CLEAN OUT LOCAL DAMAGE. MAXIMUM CUTOUT LENGTH NOT TO EXCEED 2.00 INCHES. TOTAL LENGTH OF CLEANED OUT SECTIONS NOT TO EXCEED 1/6 OF TOTAL LENGTH OF AFT EDGE.

CORNER RADII OF CLEANED OUT DAMAGE NOT LESS THAN .25.

AFT EDGE
DETAIL II

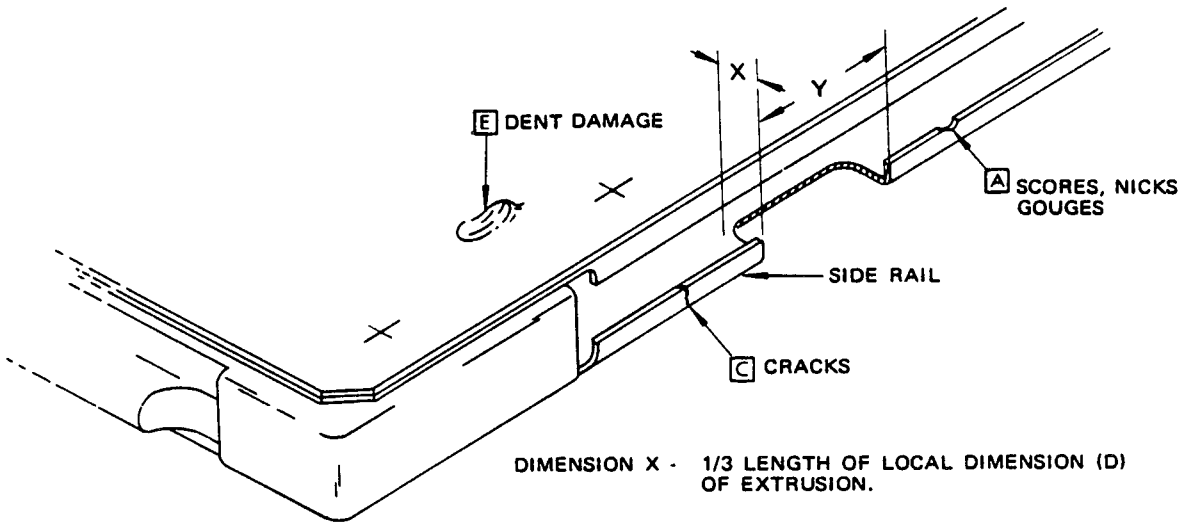

DIMENSION X - 1/3 LENGTH OF LOCAL DIMENSION (D) OF EXTRUSION.

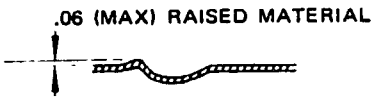

SECTION THROUGH DENT DAMAGE

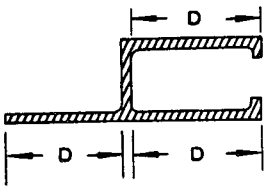

SECTION THROUGH SIDE RAIL

DETAIL III

Allowable Damage - Seat and Galley Floor Pallets
Figure 3 (Sheet 5 of 6)

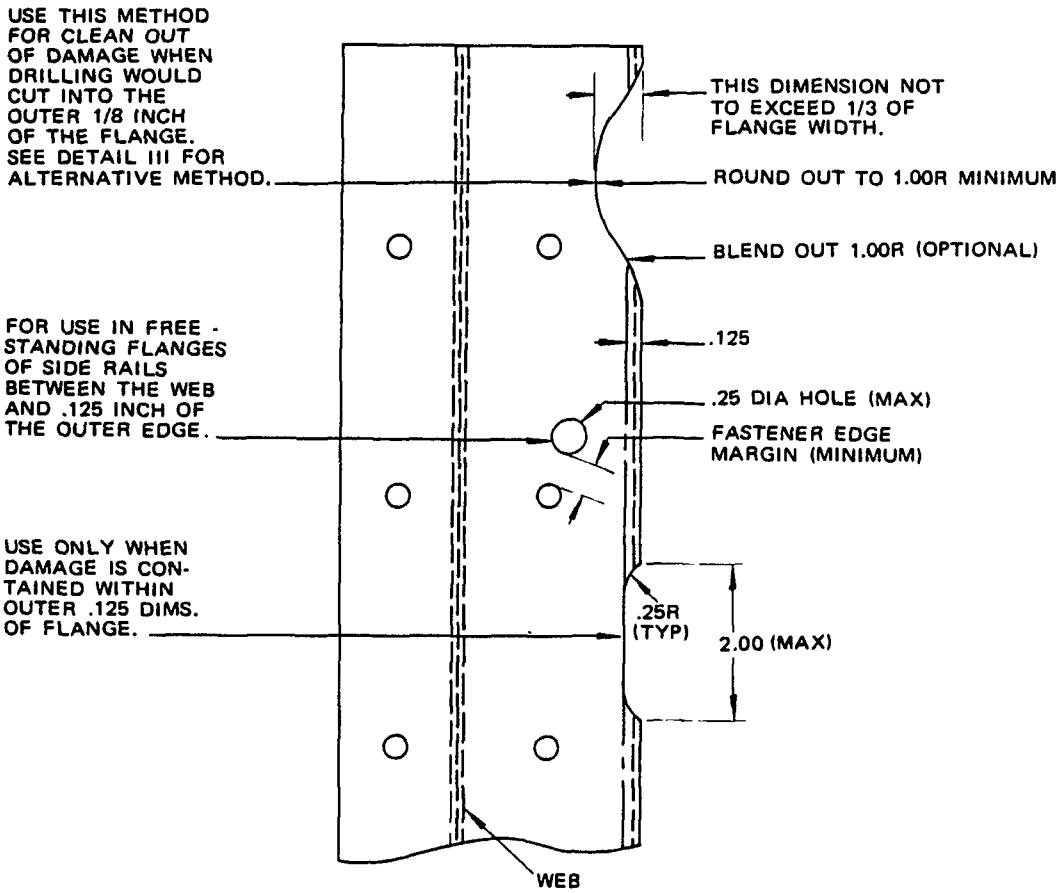

CLEANOUT OF MINOR DAMAGE IN FREE-STANDING FLANGES OF EXTRUSIONS

DETAIL IV

Allowable Damage - Seat and Galley Floor Pallets
Figure 3 (Sheet 6 of 6)

REPAIR INSTRUCTIONS

1. Remove the nicks, gouges, scratches and corrosion from the fitting. Use aluminum oxide abrasive paper or the equivalent as given in SRM 51-10-1, Figure 1.
2. Remove the rework residue with a vacuum.
3. Solvent clean the reworked area.
4. Apply a chemical conversion coating as given in SRM 51-10-2.
5. Apply a finish layer of BMS 10-11, Type I primer.

NOTES

- THE ALLOWABLE DAMAGE LIMITS GIVEN IN THIS FIGURE WILL NOT HAVE AN EFFECT ON A STRUCTURALLY SIGNIFICANT ITEM (SSI) GIVEN IN SRM 51-00-4, FIG. 3. THUS, NO CHANGE TO THE SUPPLEMENTAL STRUCTURAL INSPECTION DOCUMENT (SSID) INSPECTION PROGRAM IS NECESSARY.
- HOLES THAT ARE NOT NECESSARY FOR MANUFACTURE ARE NOT PERMITTED.

[A] REFER TO DETAIL III FOR THE MAXIMUM CLEAN UP IN THIS AREA.

[B] THIS DIMENSION IS APPLICABLE TO THE STUD HOLE ONLY. IT IS NOT APPLICABLE TO THE LIP REGION.

[C] DIMENSION AFTER THE DAMAGE IS REMOVED.

Allowable Damage - Fuselage Seat Track
Figure 4 (Sheet 1)

BOEING PROPRIETARY - Copyright © - Unpublished Work - See title page for details.

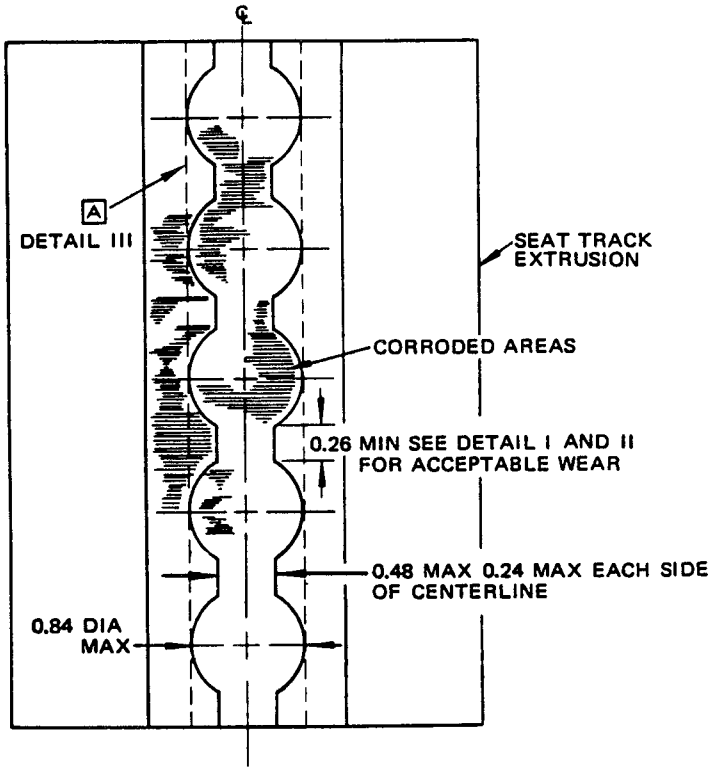

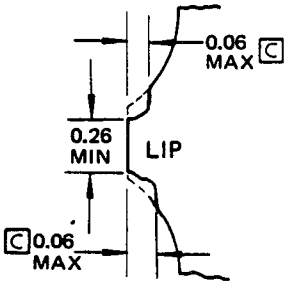

DETAIL I

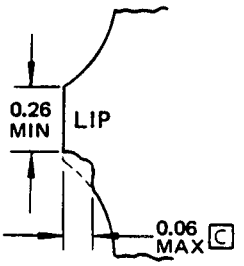

DETAIL II

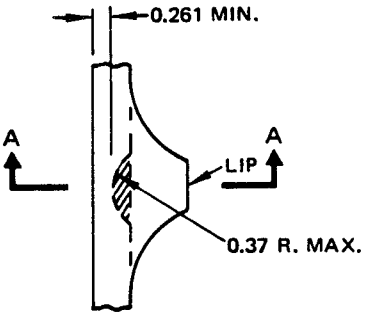

DETAIL III

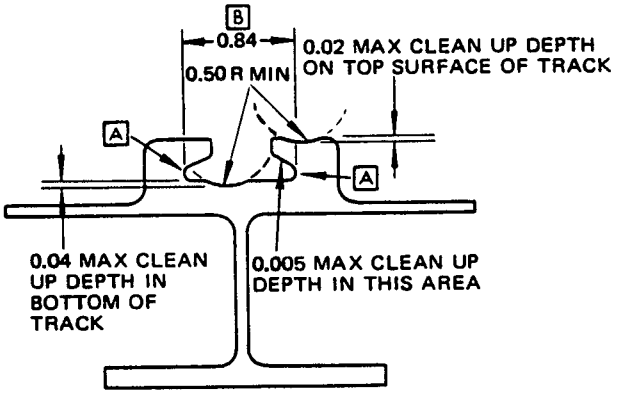

SECTION THROUGH CLEAN UP

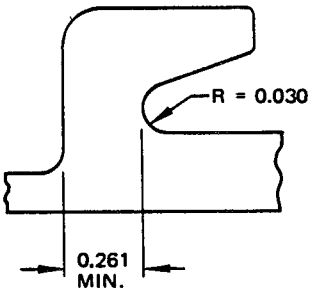

SECTION A–A

NOTE:
ALLOWABLES SHOWN ARE THE SAME FOR SECTION OF SEAT TRACK OVER THE WING

Allowable Damage - Fuselage Seat Track
Figure 4 (Sheet 2)

REPAIR INSTRUCTIONS

1. Mechanically remove corrosion from cargo tracks by using aluminum oxide abrasive paper or other acceptable tools according to SRM 51-10-1, Fig. 1.
2. Vacuum clean to remove residue.
3. Clean the reworked area with solvent.
4. Apply a chemical conversion coating as given in SRM 51-10-2 and finish with BMS 10-11, Type I primer.

NOTES

- THE ALLOWABLE DAMAGE LIMITS GIVEN IN THIS FIGURE WILL NOT HAVE AN EFFECT ON A STRUCTURALLY SIGNIFICANT ITEM (SSI) GIVEN IN SRM 51-00-4, FIG. 3. THUS, NO CHANGE TO THE SUPPLEMENTAL STRUCTURAL INSPECTION DOCUMENT (SSID) INSPECTION PROGRAM IS NECESSARY.
- NO HOLES ALLOWED OTHER THAN THOSE REQUIRED FOR MANUFACTURING.
- FLANGE DAMAGE REMOVAL LIMITED TO 1/10 OF FLANGE CROSS SECTIONAL AREA.

[A] 0.24 INCH MAX EACH SIDE OF STUD HOLE CENTERLINE.

[B] DIMENSION FOR STUD HOLE ONLY. DOES NOT APPLY TO "LIP" REGION.

[C] DIMENSION AFTER THE DAMAGE IS REMOVED.

[D] FASTENER EDGE MARGIN MUST BE MAINTAINED.

[E] NO DAMAGE ALLOWED AT THE FOLLOWING LOCATIONS EXCEPT AS SHOWN IN DETAILS I, II AND III:

- BS 420 TO BS 440
- BS 480 TO BS 500 (LBL 18.2)
- BS 492.4 TO BS 500 (RBL 13.8)
- BS 787 TO BS 807
- BS 847 TO BS 867

[F] TRIM OFF DAMAGED LIPS WHEN DAMAGE EXCEEDS THE LIMITS SHOWN IN DETAILS I AND II. DISCONTINUE USE OF THE DAMAGED TIE DOWN LOCATION. IF REMAINING TIE DOWN LOCATION(S) ARE INTACT, CONTINUE USE OF NONDAMAGED TIE DOWN LOCATION(S) IF DESIRED.

[G] DIMENSION AFTER TRIMMING.

Allowable Damage - Lower Lobe Cargo Track
Figure 5 (Sheet 1)

BOEING PROPRIETARY - Copyright © - Unpublished Work - See title page for details.

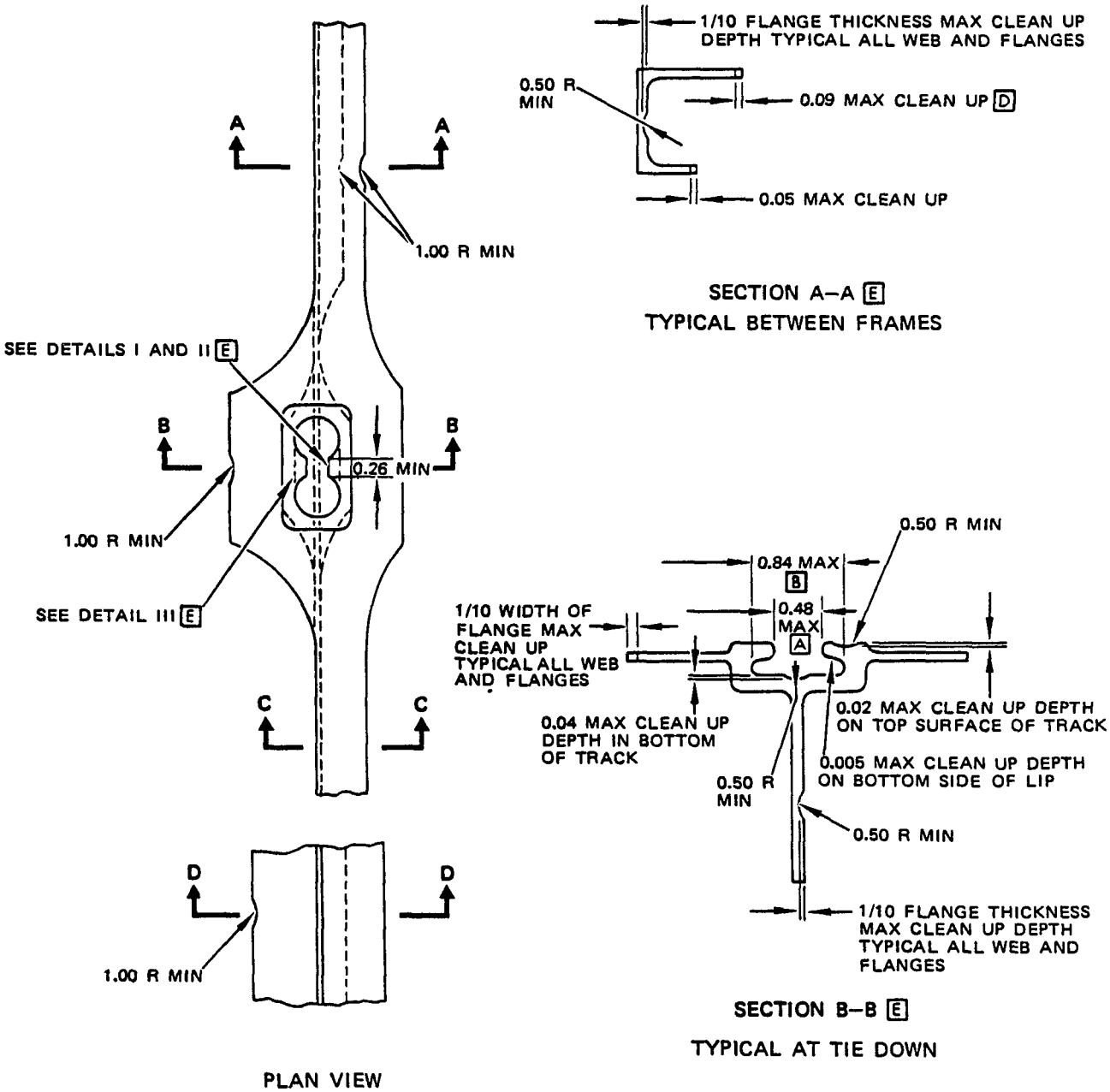

Allowable Damage - Lower Lobe Cargo Track
Figure 5 (Sheet 2)

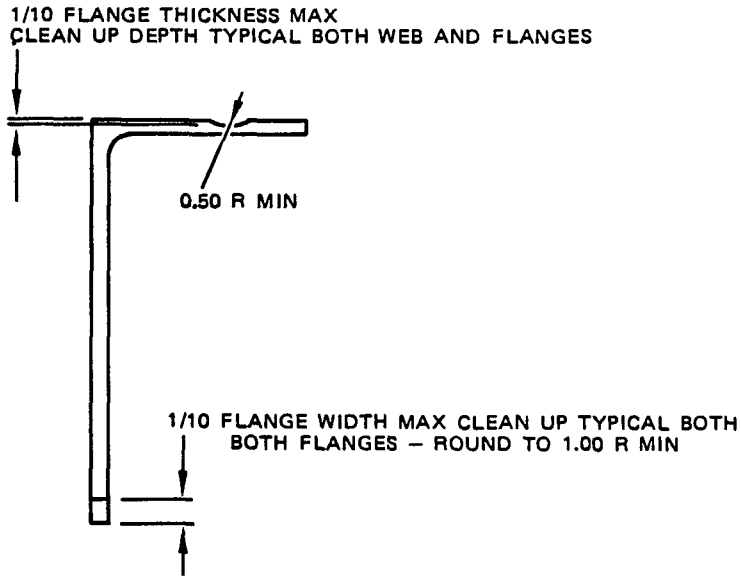

SECTION C–C [E]
TYPICAL AT FRAMES

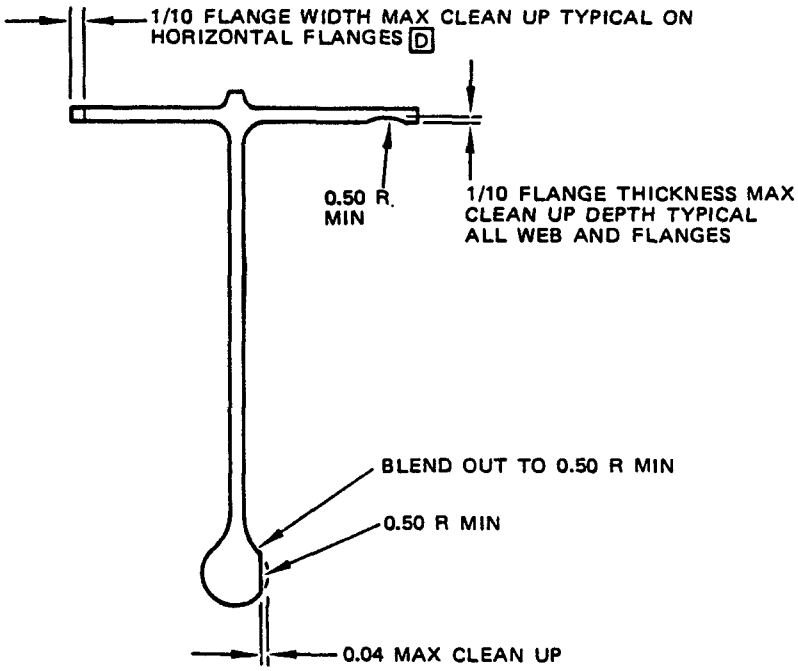

SECTION D–D [E]

Allowable Damage - Lower Lobe Cargo Track
Figure 5 (Sheet 3)

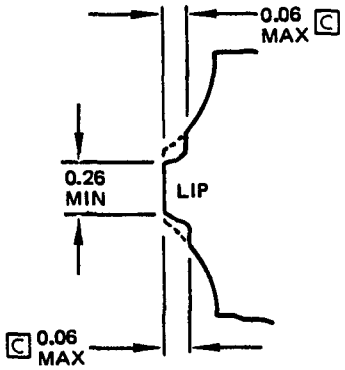

DETAIL I
LIP CLEAN UP

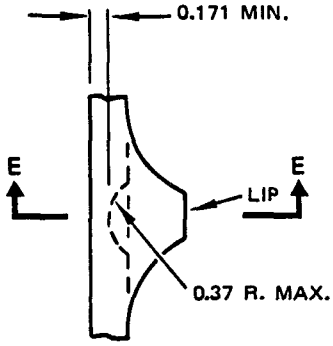

DETAIL III

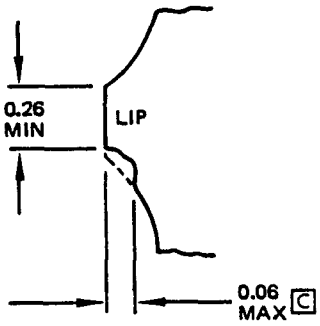

DETAIL II
LIP CLEAN UP

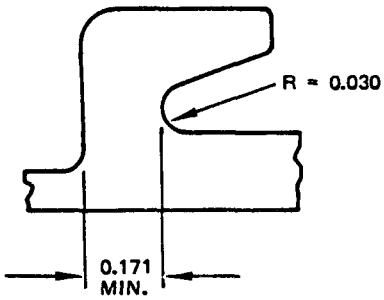

SECTION E–E

Allowable Damage - Lower Lobe Cargo Track
Figure 5 (Sheet 4)

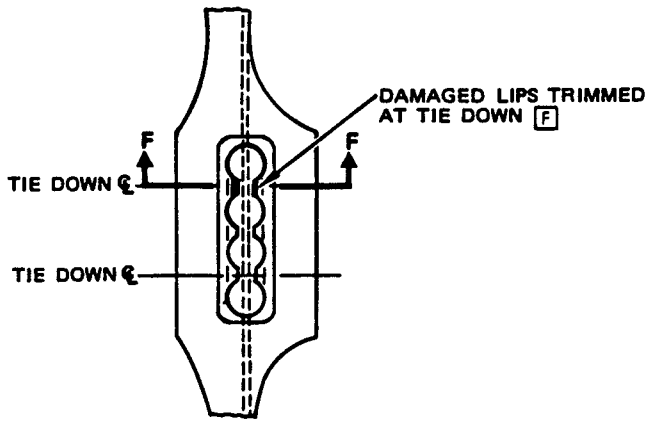

DETAIL IV

TYPICAL LOCATION WITH
MORE THAN ONE TIE DOWN

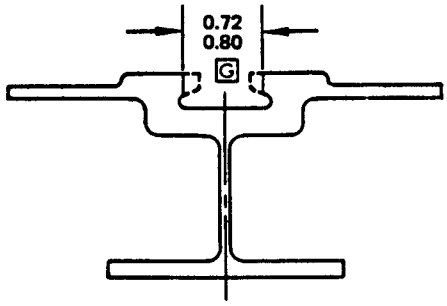

SECTION F–F

Allowable Damage - Lower Lobe Cargo Track
Figure 5 (Sheet 5)

REF DWG
65-46543
65-46544
65-46545

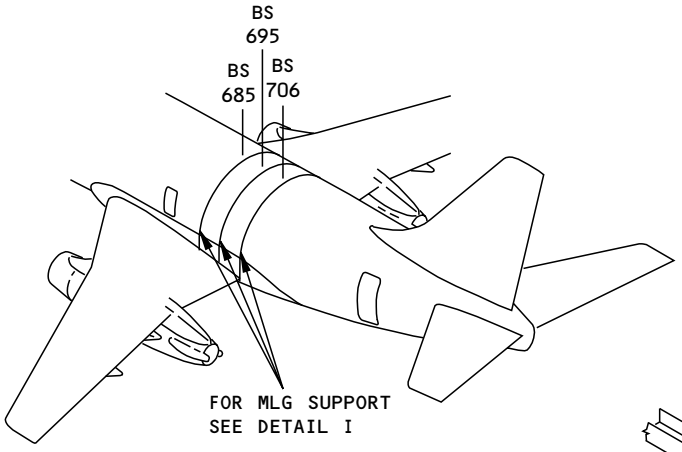

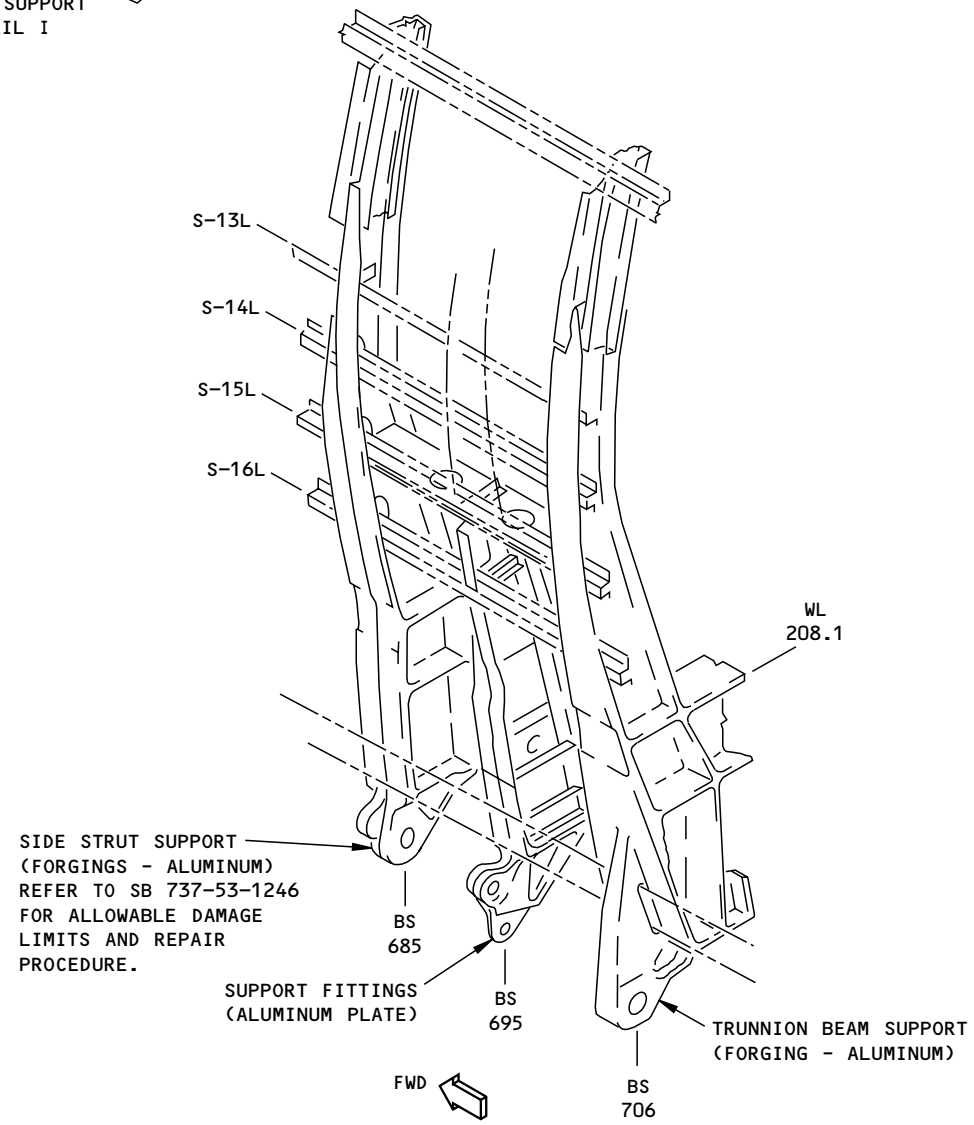

DETAIL I

Allowable Damage - Main Landing Gear Support Structure
Figure 6 (Sheet 1)

829675

BOEING PROPRIETARY - Copyright © - Unpublished Work - See title page for details.

DESCRIPTION	CRACKS	NICKS, GOUGES, SCRATCHES AND CORROSION	DENTS	HOLES AND PUNCTURES
SUPPORT FITTINGS [H]	[A]	[C]	NOT PERMITTED	NOT PERMITTED
TRUNNION BEAM SUPPORT	[A]	[B]		

ALLOWABLE DAMAGE FOR DETAIL I

NOTES

- DAMAGE, SUCH AS BLENDOUTS, TRIMOUTS, OR DENTS:
  - THAT OCCUR TO A STRUCTURALLY SIGNIFICANT ITEM (SSI) GIVEN IN SRM 51-00-4, FIG. 3 AND,
  - THAT ARE WITHIN THE ALLOWABLE DAMAGE LIMITS OF THE BOEING SRM,

  DO NOT HAVE AN EFFECT ON THE DAMAGE TOLERANCE PROPERTIES OF THE SSI. THEREFORE, EXISTING SUPPLEMENTAL STRUCTURAL INSPECTION DOCUMENT (SSID) INSPECTION PROGRAMS REMAIN EFFECTIVE.
- EXAMINE AND REMOVE THE DAMAGE. REFER TO SRM 51-10-1.
- APPLY A CHEMICAL CONVERSION COATING TO THE REWORKED ALUMINUM SURFACES. REFER TO SRM 51-10-2.
- REFINISH THE REWORKED SURFACES. REFER TO AMM 51-20.
- SHOT PEEN THE REWORKED SURFACES. REFER TO SRM 51-10-8.
- REFER TO SRM 51-10-6 FOR CORROSION REMOVAL PROCEDURES FOR ALUMINUM.
- REFER TO CMM 57-41-21 FOR REWORK LIMITS TO THE SWING LINK.
- IF THE DAMAGE IS LARGER THAN THE LIMITS GIVEN, TELL THE BOEING COMPANY OR REPLACE THE PARTS.

[A] REMOVE CRACKS ON AN EDGE AS SHOWN IN DETAILS II, IV AND VI. OTHER CRACKS ARE NOT PERMITTED AFTER THE EDGE IS REWORKED.

USE ONE OF THESE PROCEDURES TO MAKE SURE THERE ARE NO CRACKS AFTER REWORK:

- DYE PENETRANT INSPECTION. REFER TO SOPM 20-20-02.
- HIGH FREQUENCY EDDY CURRENT INSPECTION. REFER TO SOPM 20-20-02 AND NDT PART 6, 53-40-04.

[B] REMOVE THE DAMAGE TO LUGS OF THE BS 706 FITTINGS AS SHOWN IN DETAIL V. REMOVE DAMAGE THAT IS NOT IN THE AREA OF THE LUGS AS SHOWN IN DETAILS II, III, IV AND VI.

USE THE DYE PENETRANT PROCEDURE TO MAKE SURE THE FITTINGS HAVE NO CORROSION AFTER REWORK.

[C] REMOVE THE DAMAGE TO THE LUG AT THE BS 695 FITTING AS SHOWN IN DETAILS VI AND VII. REMOVE DAMAGE THAT IS NOT IN THE AREA OF THE LUG AS SHOWN IN DETAILS II, III, IV AND VI.

USE THE DYE PENETRANT PROCEDURE TO MAKE SURE THE FITTINGS HAVE NO CORROSION AFTER REWORK.

[D] DO NOT OVERSIZE THE BORE. DAMAGE IS NOT PERMITTED ON THE SURFACE OF THE LUG BORE.

[E] IF THE BUSHINGS ARE REMOVED, REINSTALL THEM WET WITH BMS 5-95 SEALANT.

[F] FOR AIRPLANES WITH CUM LINE NUMBERS 311 AND ON THAT DO OR DO NOT HAVE SERVICE BULLETIN 737-53-1080 INCORPORATED.

[G] FOR AIRPLANES WITH CUM LINE NUMBERS 1 THRU 310 THAT DO OR DO NOT HAVE SERVICE BULLETIN 737-53-1080 INCORPORATED.

[H] IF THE REPLACEMENT OF FITTINGS IS NECESSARY, REFER TO SERVICE BULLETIN 737-53-1080.

[I] THE LINES ON THE CHART SHOW THE MAXIMUM DAMAGE PERMITTED FOR THE LOWER LUG OF THE BS 695 FITTING. TO FIND IF CLEANUP OF DAMAGE IS PERMITTED, DO AS FOLLOWS:

- FIND THE POINT ON THE CHART WHERE THE VALUES OF THE MINIMUM EDGE DISTANCE ('e') AND THE MAXIMUM DEPTH OF THE CLEANUP ('d') ARE TOGETHER
- IF THAT POINT IS BELOW OR TO THE RIGHT OF THE SLOPE, CLEANUP OF DAMAGE IS PERMITTED
- IF THAT POINT IS ABOVE OR TO THE LEFT OF THE SLOPE, CLEANUP OF DAMAGE IS NOT PERMITTED.

SEE THE EXAMPLES GIVEN IN CHART I.

[J] IF THE LUG HAD BEEN REWORKED BEFORE, USE 't' TO FIND THE MINIMUM ALLOWABLE THICKNESS OF THE HALF-LUG AFTER CLEANUP. IF THIS IS THE FIRST TIME TO REWORK THE LUG, USE 'd' TO FIND THE MAXIMUM ALLOWABLE CLEANUP DEPTH OF THE LUG SURFACE.

[K] IF THE SWING LINK CLEVIS HAD BEEN REWORKED BEFORE, C AND C MUST BE MEASURED FROM THE POINT WHERE THE DEPTH OF REWORK IS THE LARGEST.

[L] FOR AIRPLANES WITH CUM LINE NUMBERS 1 THRU 310 ONLY.

Allowable Damage - Main Landing Gear Support Structure
Figure 6 (Sheet 2)

829768

BOEING PROPRIETARY - Copyright © - Unpublished Work - See title page for details.

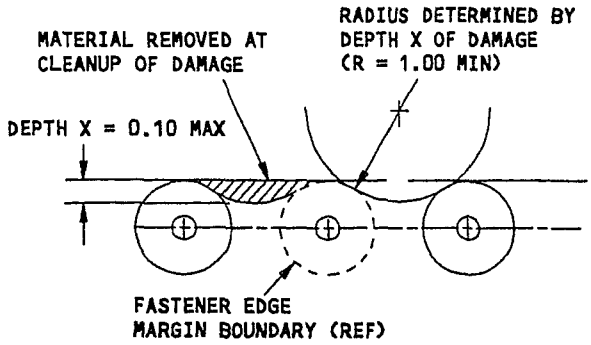

DAMAGE CLEANUP OF EDGES WHERE FASTENER EDGE MARGINS DO NOT OVERLAP

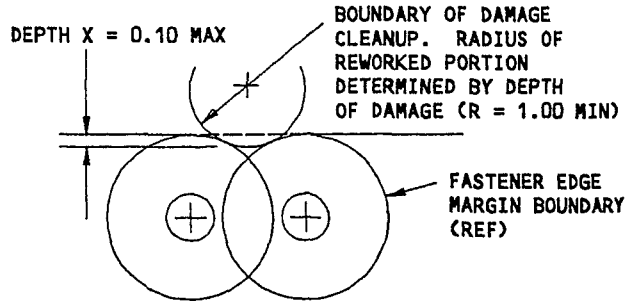

DAMAGE CLEANUP OF EDGES WHERE FASTENER EDGE MARGINS OVERLAP

DETAIL II

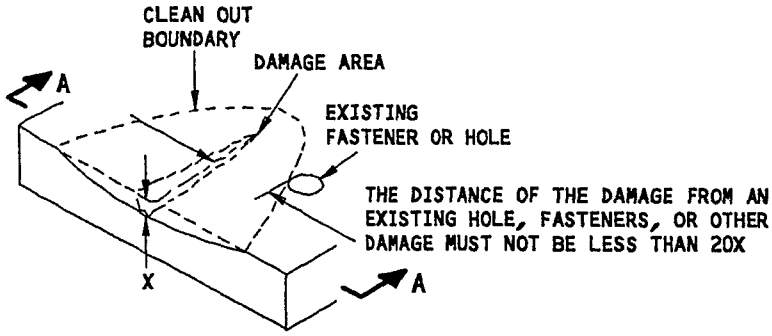

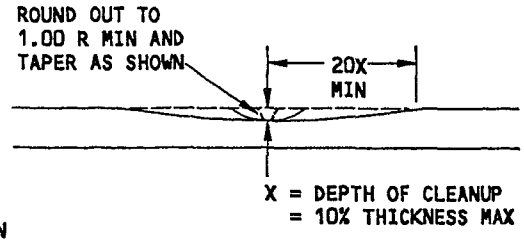

SECTION A–A

THE AREA REMOVED FOR CLEANUP MUST NOT EXCEED 10% OF THE CROSS SECTIONAL AREA

REMOVAL OF NICK, GOUGE, CORROSION AND SCRATCH DAMAGE ON A SURFACE
(DAMAGE AT EDGE SHOWN; DAMAGE AWAY FROM EDGE SIMILAR)
DETAIL III

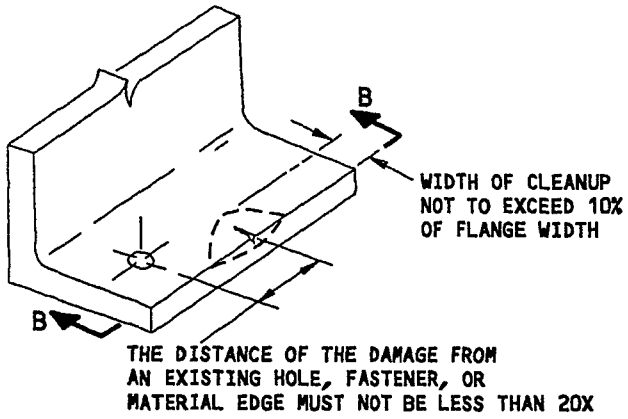

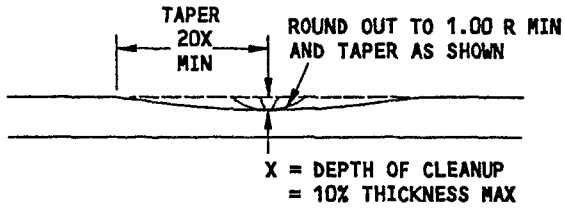

SECTION B–B

REMOVAL OF DAMAGE ON AN EDGE
DETAIL IV

Allowable Damage - Main Landing Gear Support Structure
Figure 6 (Sheet 3)

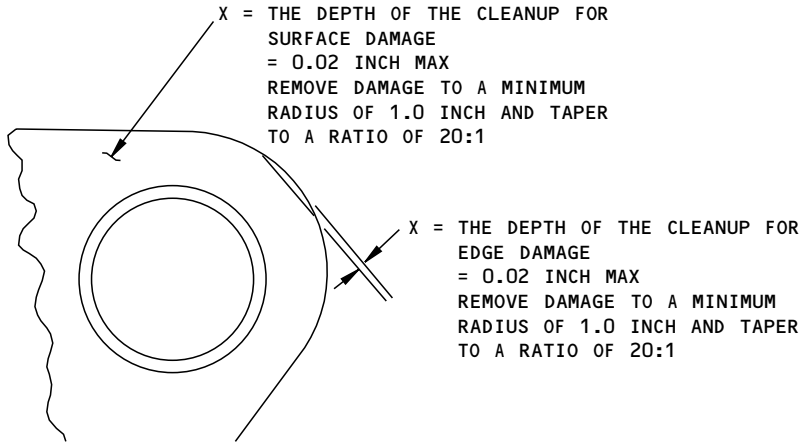

DAMAGE CLEANUP FOR BS 706 LUG SURFACES
DETAIL V

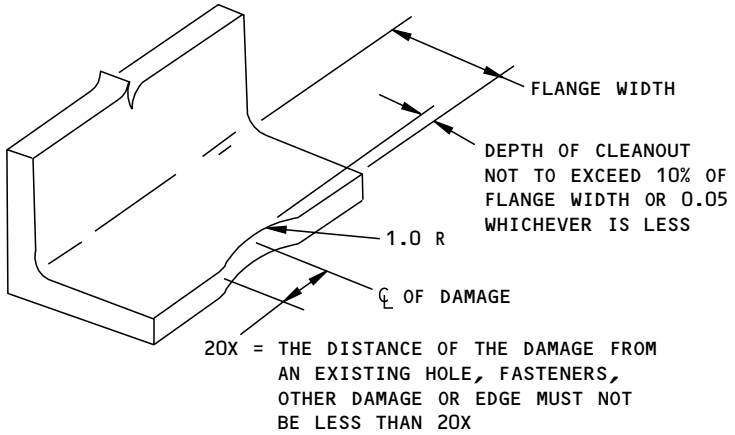

REMOVAL OF EDGE DAMAGE FROM FREE FLANGE WITHOUT FASTENERS
DETAIL VI

Allowable Damage - Main Landing Gear Support Structure
Figure 6 (Sheet 4)

BOEING PROPRIETARY - Copyright © - Unpublished Work - See title page for details.

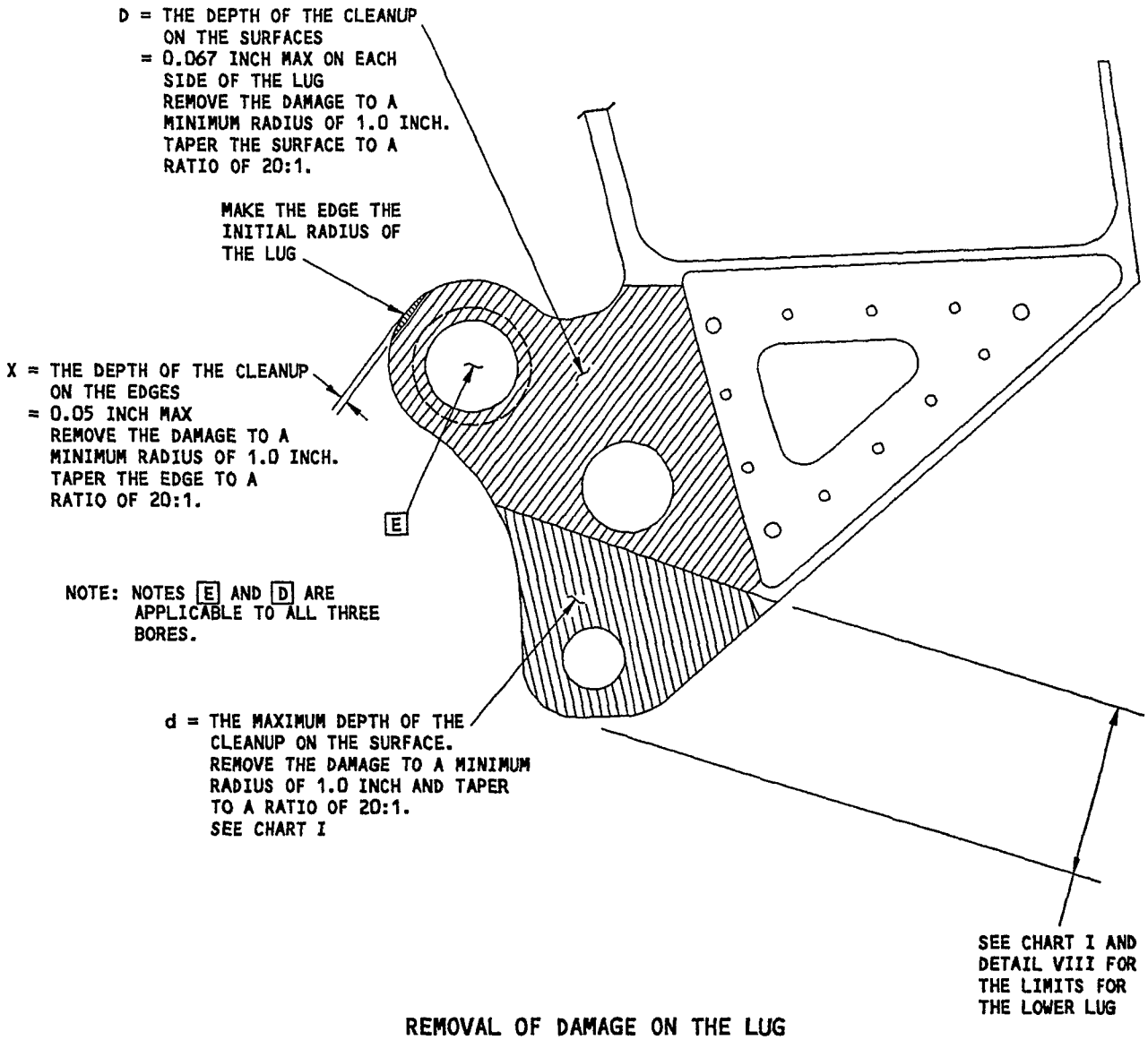

REMOVAL OF DAMAGE ON THE LUG
OF BS 695 FITTING

DETAIL VII

Allowable Damage - Main Landing Gear Support Structure
Figure 6 (Sheet 5)

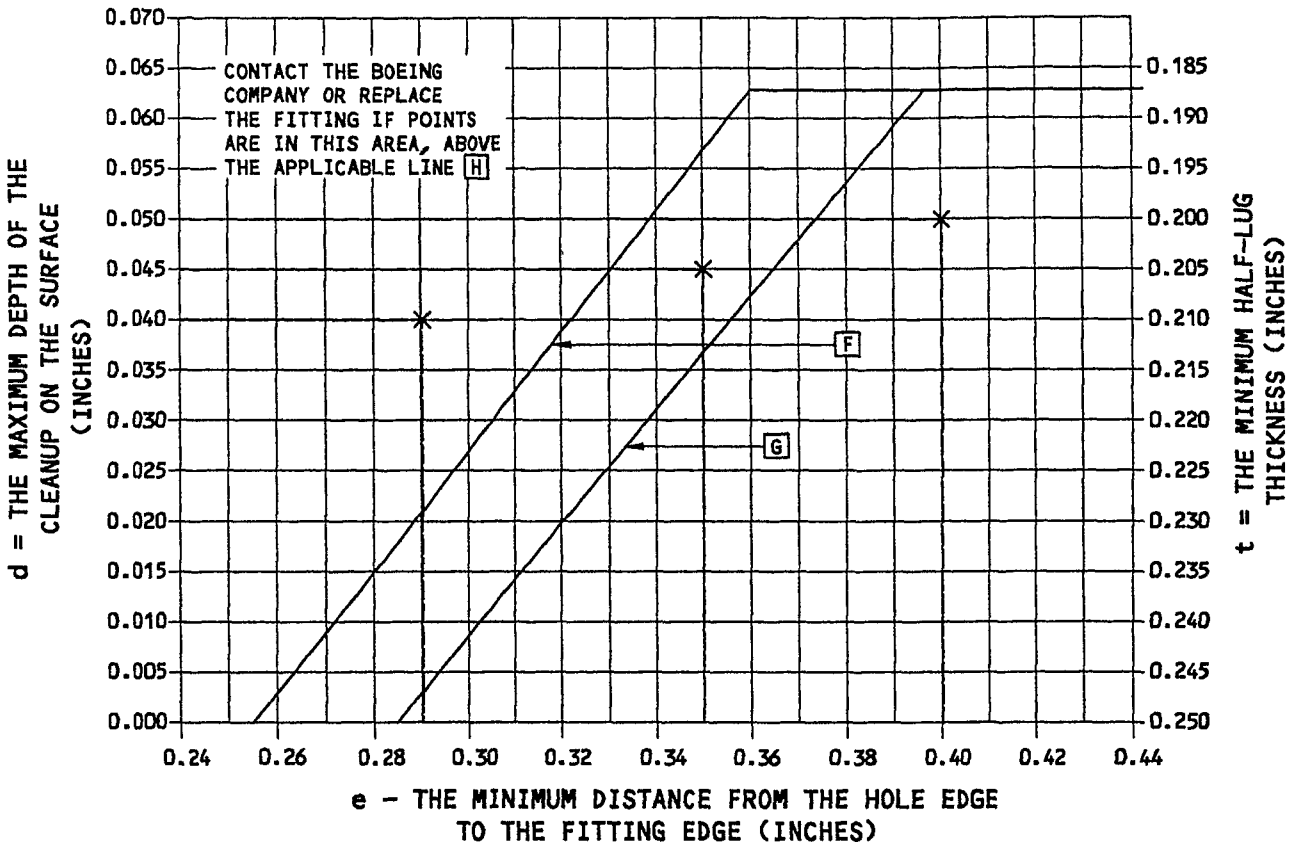

THE MAXIMUM DEPTH OF CLEANUP ON THE SURFACE
VERSUS
THE MINIMUM EDGE DISTANCE
CHART I I

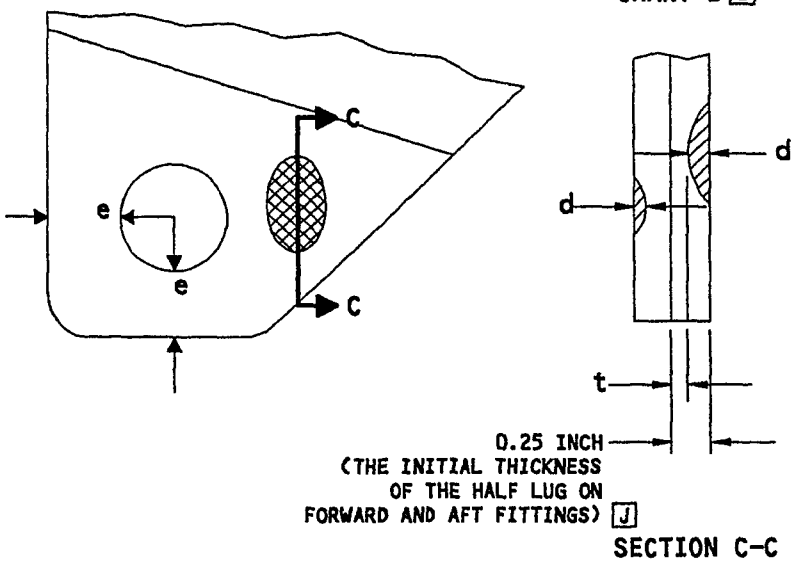

EXAMPLES
(SHOWN ON CHART I)

IF: e = 0.29 INCH
d = 0.04 inch
(OR t = 0.21 INCH)
THEN REWORK IS NOT PERMITTED FOR AIRPLANES IN NOTE F AND NOT PERMITTED FOR AIRPLANES IN NOTE G

IF: e = 0.35 INCH
d = 0.045 INCH
(OR t = 0.205 INCH)
THEN: REWORK IS PERMITTED FOR AIRPLANES IN NOTE F BUT NOT FOR AIRPLANES IN NOTE G

IF: e = 0.40 INCH
d = 0.05 INCH
(OR t = 0.20 INCH)
THEN: REWORK IS PERMITTED

Allowable Damage - Main Landing Gear Support Structure
Figure 6 (Sheet 6)

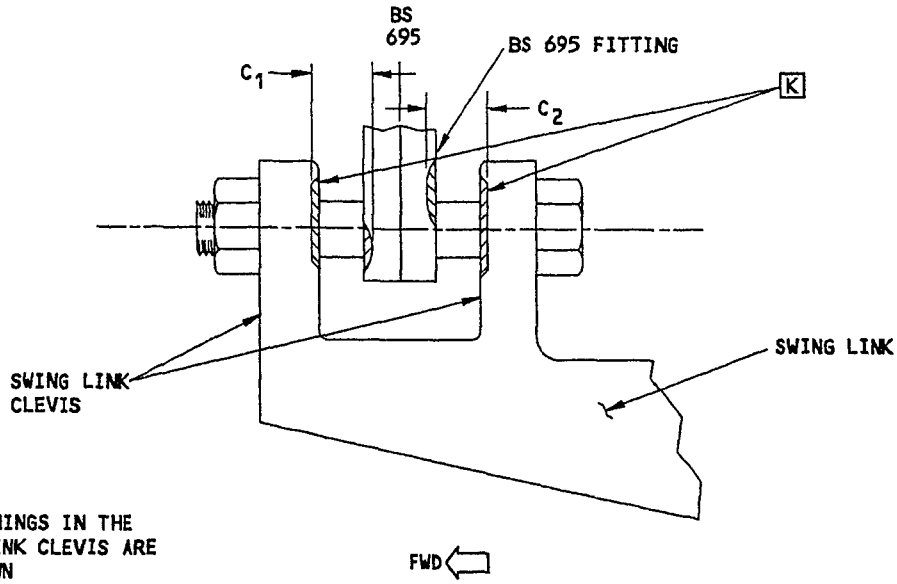

NOTE: THE BUSHINGS IN THE SWING LINK CLEVIS ARE NOT SHOWN

C_1 = THE CLEARANCE BETWEEN THE SWING LINK CLEVIS AND THE MAXIMUM DEPTH OF THE CLEANUP ON THE SIDE OF THE LUG

C_2 = THE CLEARANCE BETWEEN THE SWING LINK CLEVIS AND THE MAXIMUM DEPTH OF THE CLEANUP ON THE SIDE OF THE LUG

$C_{AVG} = (C_1 + C_2)/2$
= THE MAXIMUM AVERAGE CLEARANCE BETWEEN THE SWING LINK CLEVIS AND THE MAXIMUM CLEANUP DEPTHS ON THE SIDE OF THE LUG

C_{AVG} MUST NOT BE MORE THAN 0.292 INCH

CLEARANCE BETWEEN THE SWING LINK AND THE BS695 FITTING AFTER CLEANUP

DETAIL VIII L

Allowable Damage - Main Landing Gear Support Structure
Figure 6 (Sheet 7)

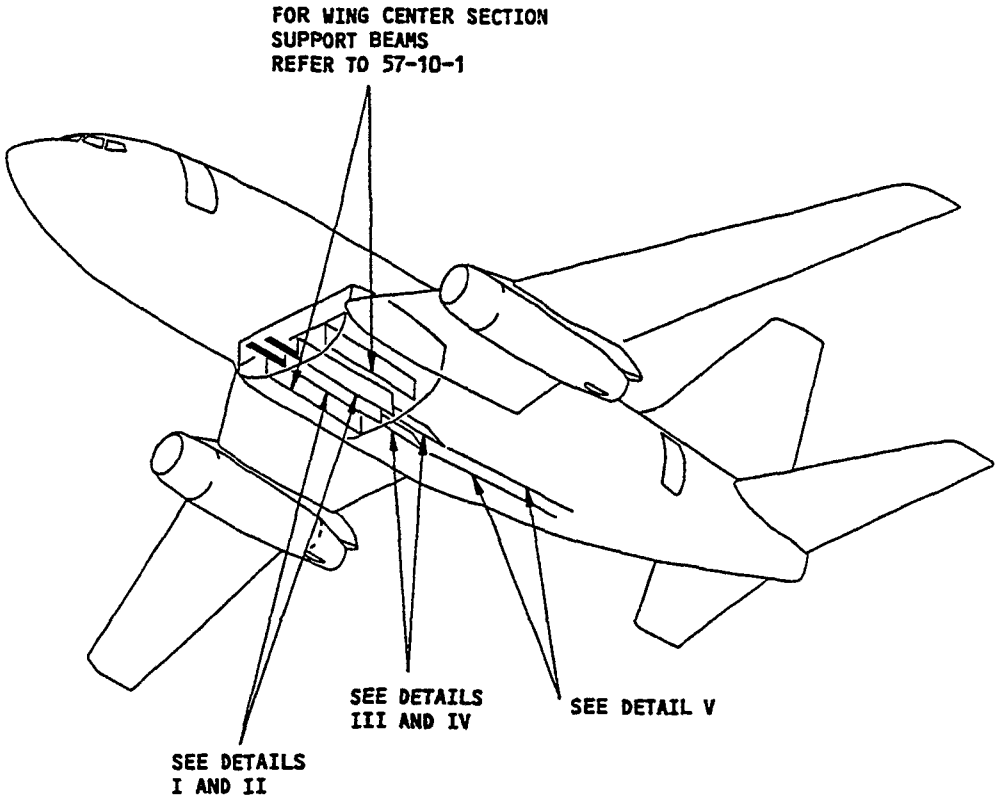

Keel Beam Structure Allowable Damage
Figure 7 (Sheet 1)

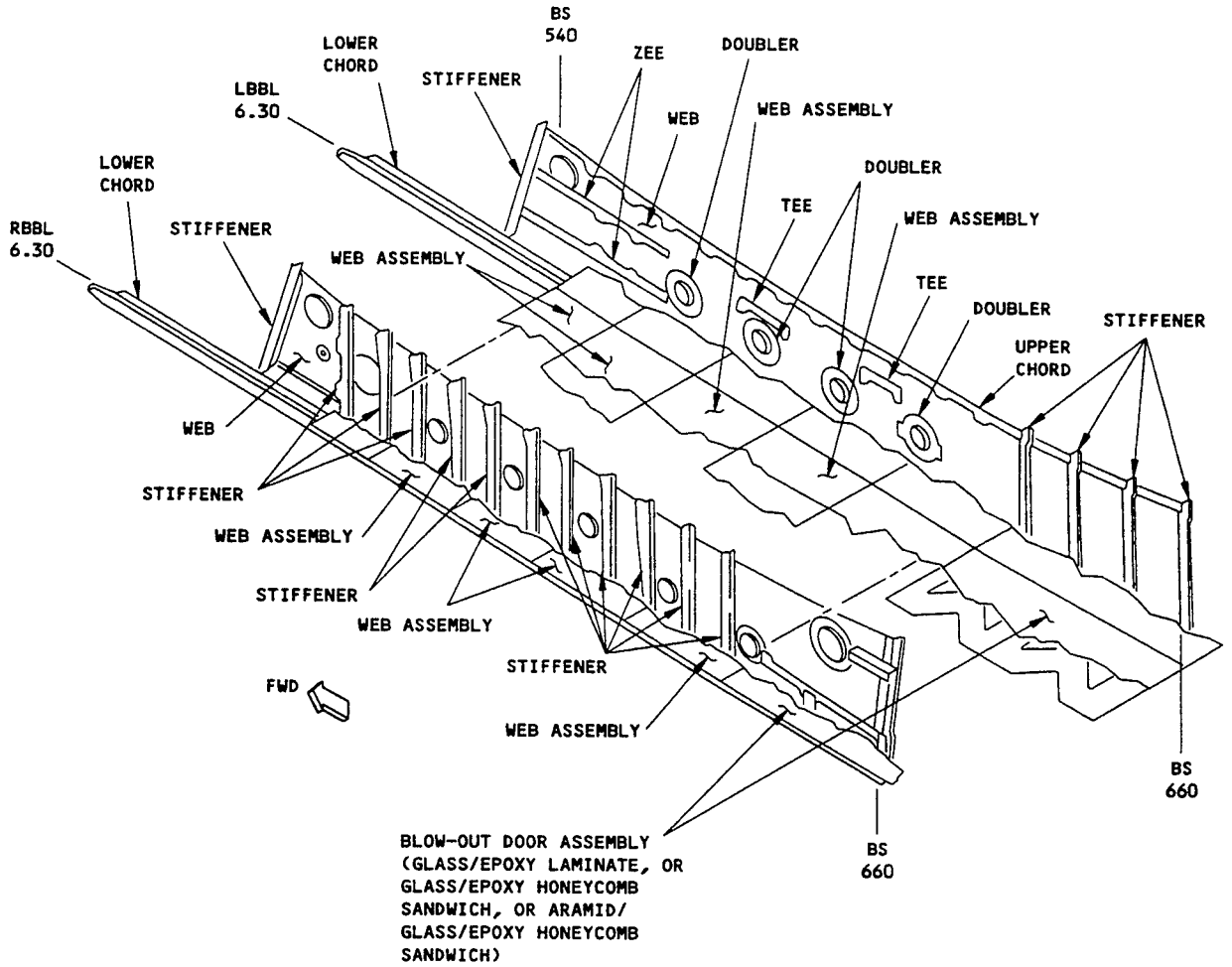

MATERIAL: ALUMINUM UNLESS SPECIFIED DIFFERENTLY

DETAIL I

Keel Beam Structure Allowable Damage
Figure 7 (Sheet 2)

ALLOWABLE DAMAGE FOR DETAIL I						
DESCRIPTION		CRACKS	NICKS, GOUGES SCRATCHES AND CORROSION	DENTS	HOLES AND PUNCTURES	DELAMINATION
UPPER CHORD		A	C	NOT PERMITTED	NOT PERMITTED	—
LOWER CHORD		A	U	NOT PERMITTED	NOT PERMITTED	—
STIFFENER		A	C	NOT PERMITTED	G	—
DOUBLER		A	B	NOT PERMITTED	NOT PERMITTED	—
TEE		A	C	NOT PERMITTED	G	—
ZEE		A	D	E	G	—
BLOW-OUT DOOR ASSEMBLY (GLASS/EPOXY LAMINATE OR GLASS/EPOXY HONEY-COMB SANDWICH OR ARAMID/GLASS/EPOXY HONEYCOMB SANDWICH O		A	K	L	M	N
WEB ASSEMBLY	WEB	A	D	E	F	—
	DOUBLER	A	D	E	F	—
WEB		A	D	E	F	—

TABLE I

Keel Beam Structure Allowable Damage
Figure 7 (Sheet 3)

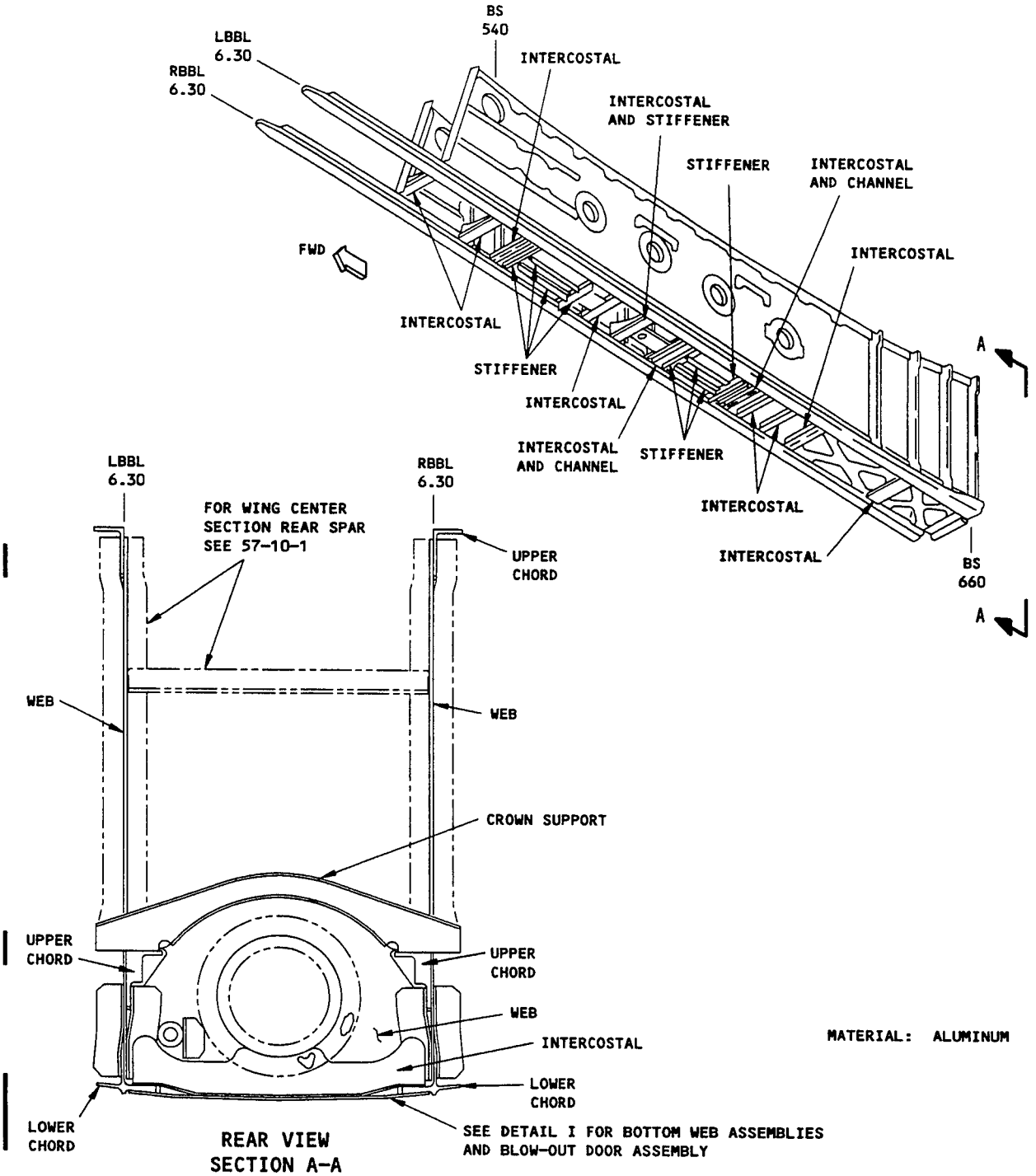

DETAIL II P

Keel Beam Structure Allowable Damage
Figure 7 (Sheet 4)

ALLOWABLE DAMAGE FOR DETAIL II AND SECTION A-A				
DESCRIPTION	CRACKS	NICKS, GOUGES SCRATCHES AND CORROSION	DENTS	HOLES AND PUNCTURES
UPPER CHORD	A	C	NOT PERMITTED	NOT PERMITTED
LOWER CHORD	A	U	NOT PERMITTED	NOT PERMITTED
INTERCOSTAL	A	D	E	G
STIFFENER	A	C	NOT PERMITTED	G
CHANNEL	A	D	E	G
WEB	A	D	E	F
CROWN SUPPORT	A	D	E	G

TABLE II

Keel Beam Structure Allowable Damage
Figure 7 (Sheet 5)

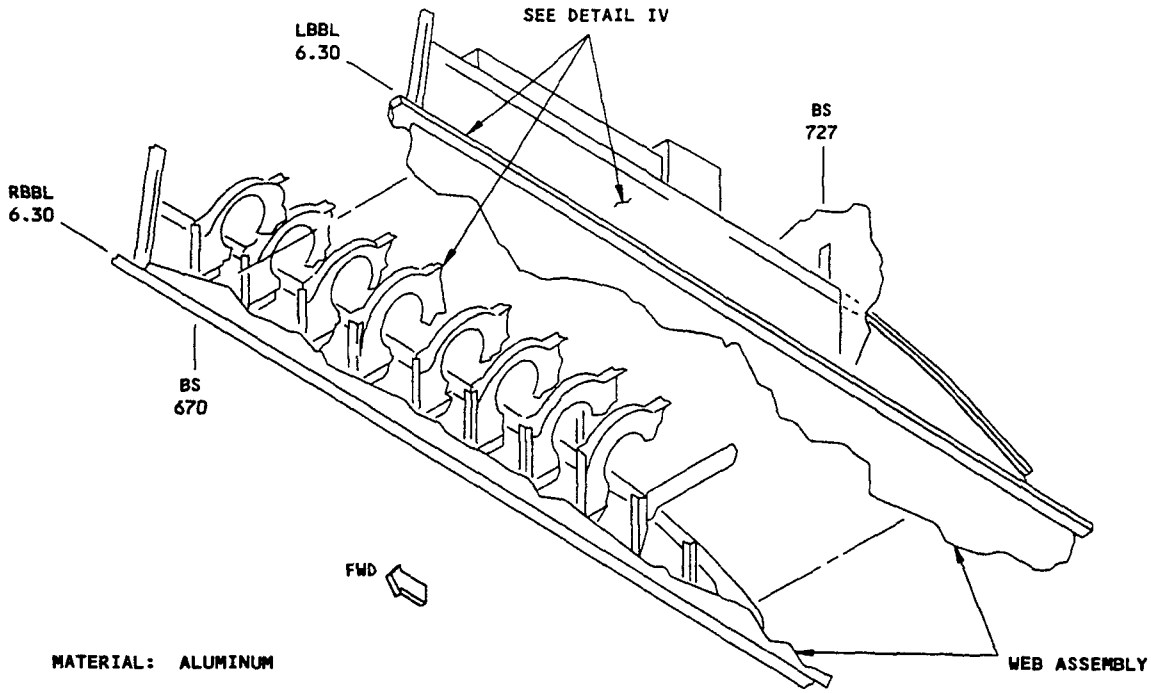

BOTTOM WEB ASSEMBLY
STA 670 TO STA 727
DETAIL III

ALLOWABLE DAMAGE FOR DETAIL III					
DESCRIPTION		CRACKS	NICKS, GOUGES SCRATCHES AND CORROSION	DENTS	HOLES AND PUNCTURES
WEB ASSEMBLY	WEB	A	D	E	F
	DOUBLER	A	D	E	F

TABLE III

Keel Beam Structure Allowable Damage
Figure 7 (Sheet 6)

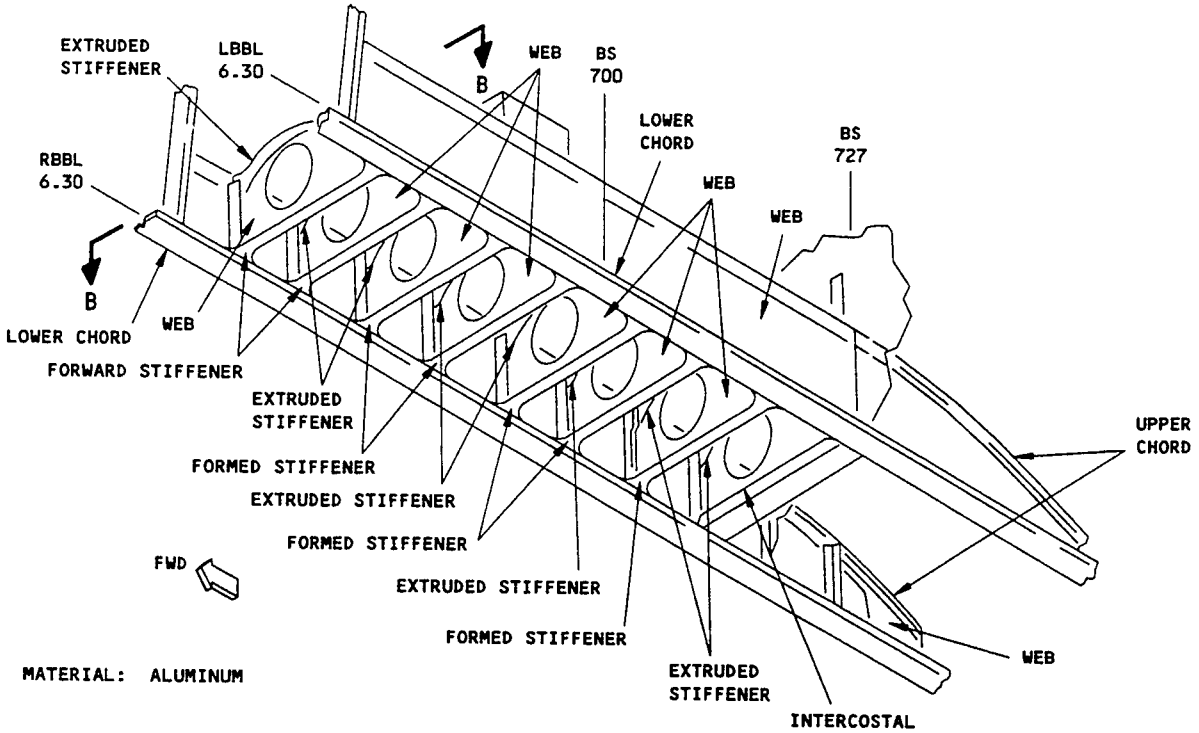

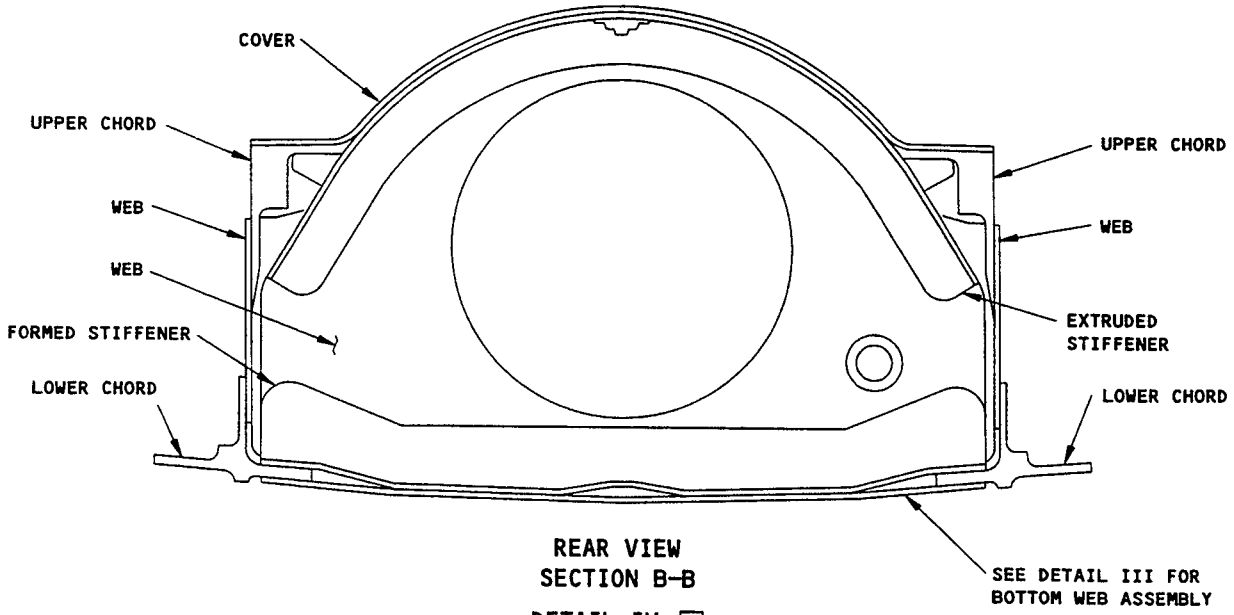

REAR VIEW
SECTION B-B

DETAIL IV [Q]

Keel Beam Structure Allowable Damage
Figure 7 (Sheet 7)

ALLOWABLE DAMAGE FOR DETAIL IV AND SECTION B-B				
DESCRIPTION	CRACKS	NICKS, GOUGES SCRATCHES AND CORROSION	DENTS	HOLES AND PUNCTURES
UPPER CHORD	A	C	NOT PERMITTED	NOT PERMITTED
LOWER CHORD	A	U	NOT PERMITTED	NOT PERMITTED
WEB	A	D	E	F
FORMED STIFFENER	A	B	NOT PERMITTED	NOT PERMITTED
EXTRUDED STIFFENER	A	C	NOT PERMITTED	NOT PERMITTED
INTERCOSTAL	A	D	E	G
COVER	R	B	S	T

TABLE IV

Keel Beam Structure Allowable Damage
Figure 7 (Sheet 8)

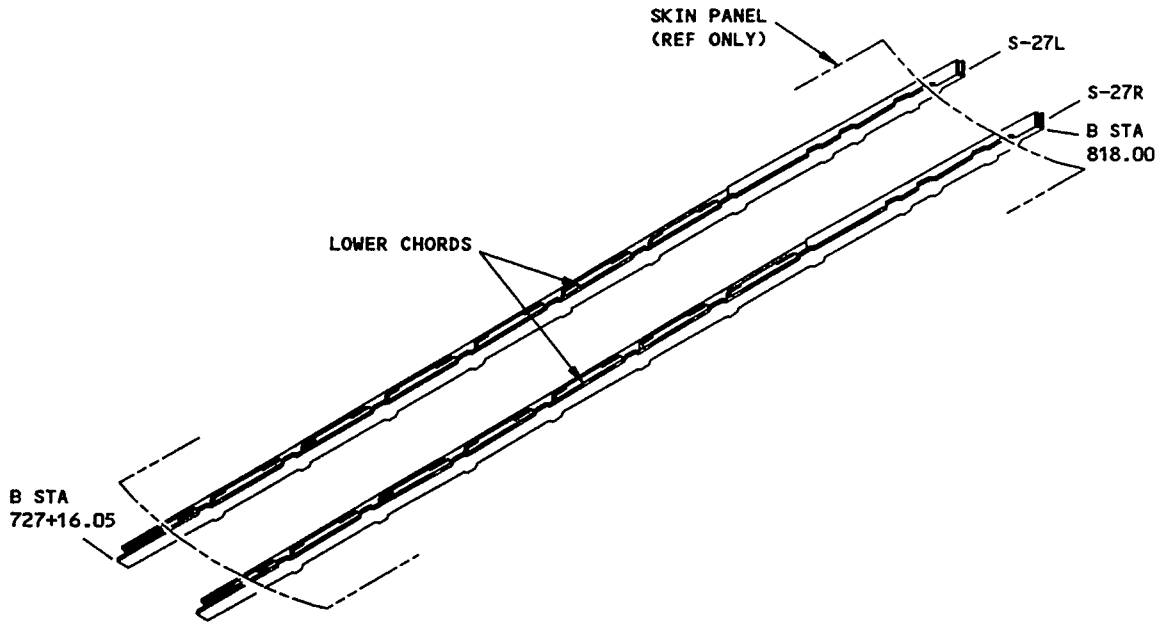

DETAIL V

ALLOWABLE DAMAGE FOR DETAIL V				
DESCRIPTION	CRACKS	NICKS, GOUGES SCRATCHES AND CORROSION	DENTS	HOLES AND PUNCTURES
LOWER CHORD	A	U	NOT PERMITTED	NOT PERMITTED

TABLE V

Keel Beam Structure Allowable Damage
Figure 7 (Sheet 9)

NOTES

- THE ALLOWABLE DAMAGE LIMITS GIVEN IN THIS FIGURE WILL NOT HAVE AN EFFECT ON A STRUCTURALLY SIGNIFICANT ITEM (SSI) GIVEN IN SRM 51-00-4, FIG. 3. THUS, NO CHANGE TO THE SUPPLEMENTAL STRUCTURAL INSPECTION DOCUMENT (SSID) INSPECTION PROGRAM IS NECESSARY.
- REFER TO AMM 51-21 TO APPLY A FINISH TO THE REWORKED AREAS.
- REFER TO SRM 51-10-1 FOR DAMAGE CLASSIFICATION.
- REFER TO SRM 51-10-2 FOR PROTECTIVE TREATMENT OF METAL.
- NICKS, GOUGES, AND SCRATCHES WHICH DO NOT GO THROUGH THE CLAD SURFACES MAY BE IGNORED.

[A] CRACKS ARE NOT PERMITTED. TELL THE BOEING COMPANY IF YOU FIND CRACKS.

[B] REMOVE THE NICKS, GOUGES, SCRATCHES, OR CORROSION AS GIVEN IN DETAILS VI, VII, IX AND X.

[C] REMOVE THE NICKS, GOUGES, SCRATCHES, OR CORROSION AS GIVEN IN DETAILS VI, VII, VIII AND IX.

[D] REMOVE THE NICKS, GOUGES, SCRATCHES, OR CORROSION AS GIVEN IN DETAILS VI, VII, IX, AND X.

[E] DENTS ARE PERMITTED AS GIVEN IN DETAIL XIII.

[F] HOLES AND PUNCTURES TO A MAXIMUM DIAMETER OF 0.25 INCH ARE PERMITTED AFTER CLEANUP. THE DAMAGE MUST BE A MINIMUM OF 1.00 INCH FROM ANY OTHER HOLE, PART EDGE, OR OTHER DAMAGE. CLEAN UP THE DAMAGE AND FILL THE HOLE WITH A 2117-T3 OR 2117-T4 ALUMINUM PROTRUDING HEAD RIVET.

[G] HOLES AND PUNCTURES ARE PERMITTED IN THE FREE FLANGE AS GIVEN IN DETAIL XII. HOLES AND PUNCTURES ARE PERMITTED IN THE WEB TO A MAXIMUM DIAMETER OF 0.25 INCH AFTER CLEAN-UP. THE DAMAGE MUST BE A MINIMUM OF 1.00 INCH FROM ANY OTHER HOLE, PART EDGE, OR OTHER DAMAGE. CLEAN UP THE DAMAGE AND FILL THE HOLE WITH A 2117-T3 OR 2117-T4 ALUMINUM PROTRUDING HEAD RIVET.

[H] SEAL THE DAMAGE WITH ALUMINUM FOIL TAPE (3M-Y436 OR EQUIVALENT) TO PREVENT THE ENTRANCE OF WATER OR OTHER UNWANTED MATERIAL. WRITE THE LOCATION AND MAKE AN INSPECTION OF THE DAMAGE AT EACH "A" CHECK. REPLACE THE ALUMINUM FOIL TAPE IF THERE IS ANY DETERIORATION. REPAIR THE DAMAGE BY THE NEXT "C" CHECK.

[I] SEAL THE DAMAGE WITH ALUMINUM FOIL TAPE (3M-Y436) OR EQUIVALENT) TO PREVENT THE ENTRANCE OF WATER OR OTHER UNWANTED MATERIAL. WRITE THE LOCATION AND MAKE AN INSPECTION OF THE DAMAGE AT EACH "A" CHECK. REPLACE THE ALUMINUM FOIL TAPE IF THERE IS ANY DETERIORATION. REPAIR THE DAMAGE IF IT IS MORE THAN THE ALLOWABLE DAMAGE LIMITS.

[J] CLEAN UP EDGE CRACKS AS GIVEN IN DETAILS VI AND XI. CRACKS ARE PERMITTED TO A MAXIMUM LENGTH OF 1.50 INCH. THE DAMAGE MUST BE A MINIMUM OF 6.00 INCHES FROM ANY OTHER DAMAGE. THE DAMAGE MUST ALSO BE A MINIMUM OF 2.00 INCHES FROM ANY HOLE (EXCEPT FOR HOLE DAMAGE) OR PART EDGE. [H]

[K] IF THE FIBERS ARE DAMAGED, USE THE LIMITS FOR A CRACK. [A] IF THE FIBERS ARE NOT DAMAGED, SEAL THE DAMAGE AS GIVEN IN [H].

[L] DENTS USUALLY CAUSE FIBER DAMAGE OR DELAMINATION THAT MAY NOT BE FOUND WHEN YOU USE VISUAL OR TAP TEST PROCEDURES. DENTS ARE PERMITTED TO A MAXIMUM DIAMETER OF 1.00 INCH. THE DAMAGE MUST BE A MINIMUM OF 6.00 INCHES (EDGE TO EDGE) FROM ANY OTHER DAMAGE. THE DAMAGE MUST ALSO BE A MINIMUM OF 2.00 INCHES FROM ANY HOLE (EXCEPT FOR HOLE DAMAGE) OR PART EDGE. THERE MUST BE NO FIBER DAMAGE OR DELAMINATION. SEAL THE DAMAGE AS GIVEN IN NOTE [H]. IF THERE IS FIBER DAMAGE, USE THE LIMITS FOR A CRACK. [A] IF THERE IS A DELAMINATION, USE THE LIMITS FOR A DELAMINATION. [N]

[M] HOLES AND PUNCTURES ARE PERMITTED TO A MAXIMUM DIAMETER OF 1.00 INCH. THE DAMAGE MUST BE A MINIMUM OF 6.00 INCHES (EDGE TO EDGE) FROM ANY OTHER DAMAGE. THE DAMAGE MUST ALSO BE A MINIMUM OF 2.00 INCHES (EDGE TO EDGE) FROM ANY HOLE (EXCEPT FOR HOLE DAMAGE) OR PART EDGE. DO NOT CLEAN UP THE DAMAGE EXCEPT TO REMOVE RESIN BURRS WHICH EXTEND OUT FROM THE SURFACE CONTOUR. [H]

[N] DELAMINATION IS PERMITTED TO A MAXIMUM DIAMETER OF 1.00 INCH. THE DAMAGE MUST BE A MINIMUM OF 6.00 INCHES (EDGE TO EDGE) FROM ANY OTHER DAMAGE. THE DAMAGE MUST ALSO BE A MINIMUM OF 1.00 INCH (EDGE TO EDGE) FROM ANY HOLE (EXCEPT FOR HOLE DAMAGE) OR PART EDGE. SEAL THE DAMAGE AS GIVEN IN NOTE [I]. DELAMINATION FROM THE EDGE IS PERMITTED TO A MAXIMUM OF 0.10 INCH. SEAL THE EDGE DAMAGE AS AS GIVEN IN NOTE [H].

[O] DAMAGE TO FASTENER HOLES CAUSED BY OVALIZATION, FASTENER PULL-THROUGH, OR CRACKS WHICH EXTEND OUT OF A FASTENER HOLE IS PERMITTED. THE DAMAGE IS APPLICABLE TO ONE FASTENER IN SIX. THE TOTAL DAMAGE MUST NOT BE MORE THAN 10% OF THE EDGEBAND LENGTH ON EACH SIDE.

[P] THE BOTTOM WEB ASSEMBLIES AND THE BLOW-OUT DOOR ASSEMBLY ARE NOT SHOWN TO GIVE A CLEAR VIEW OF THE INTERNAL STRUCTURE.

[Q] THE BOTTOM WEB ASSEMBLY IS NOT SHOWN TO GIVE A CLEAR VIEW OF THE INTERNAL STRUCTURE.

Keel Beam Structure Allowable Damage
Figure 7 (Sheet 10)

BOEING PROPRIETARY - Copyright © - Unpublished Work - See title page for details.

NOTES (CONTINUED)

[R] REMOVE THE CRACKS ON THE EDGE AS SHOWN IN DETAILS VI AND XI. [I] OTHER CRACKS MUST BE:

- LESS THAN 1.5 INCHES IN LENGTH
- A MINIMUM OF 2D AWAY FROM A FASTENER HOLE
- 4.0 INCHES AWAY FROM THE EDGE OF OTHER DAMAGE.

IF AN END OF A CRACK IS AT AN EDGE, THEN THE OTHER END OF THE CRACK MUST BE A MINIMUM OF 1.0 INCH AWAY FROM AN EDGE. DRILL A STOP HOLE AT THE ENDS OF THE CRACK THAT ARE NOT AT AN EDGE. [I] REFER TO SRM 51-10-1.

[S] DENTS ARE PERMITTED AS SHOWN IN DETAIL XIII.

[T] HOLES AND PUNCTURES ARE PERMITTED TO A MAXIMUM OF 0.25 INCH IN DIAMETER.

[U] REMOVE THE NICKS, GOUGES, SCRATCHES OR CORROSION AS GIVEN IN DETAIL XIV.

Keel Beam Structure Allowable Damage
Figure 7 (Sheet 11)

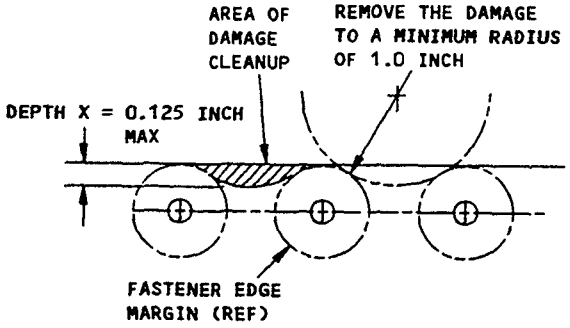

REMOVAL OF DAMAGE AT EDGES WHERE FASTENER EDGE MARGINS DO NOT OVERLAP

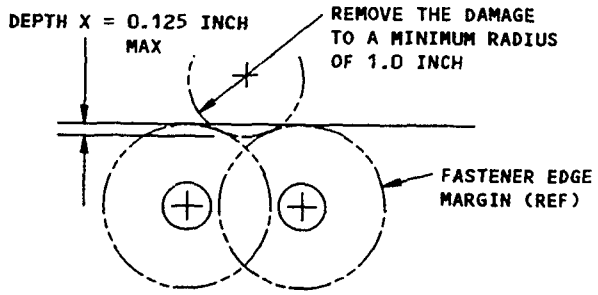

REMOVAL OF DAMAGE AT EDGES WHERE FASTENER EDGE MARGINS OVERLAP

DETAIL VI

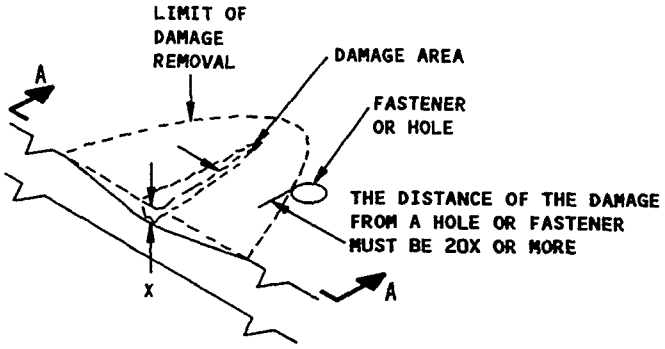

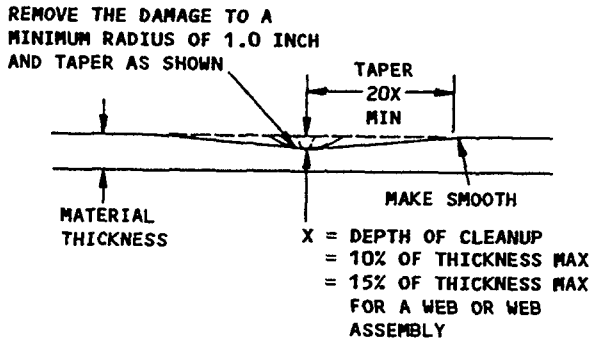

SECTION A-A

REMOVAL OF NICK, GOUGE, CORROSION AND SCRATCH DAMAGE ON A SURFACE
DETAIL VII

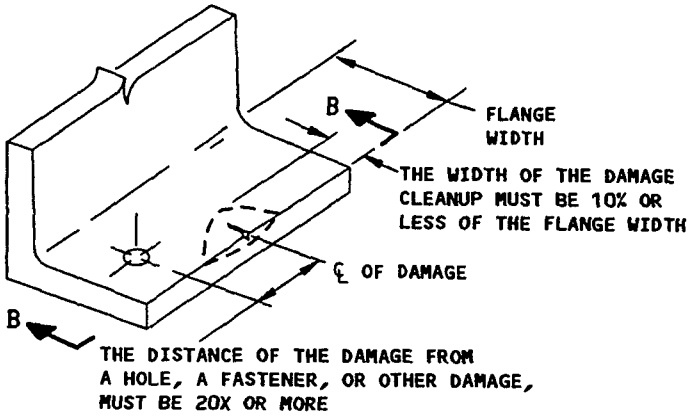

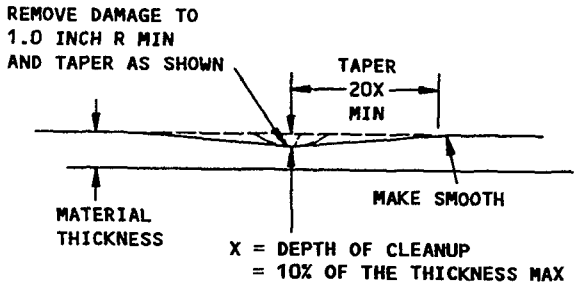

SECTION B-B

REMOVAL OF DAMAGE ON A SURFACE
DETAIL VIII

Keel Beam Structure Allowable Damage
Figure 7 (Sheet 12)

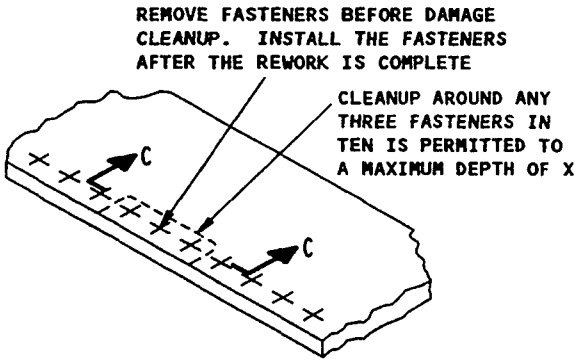

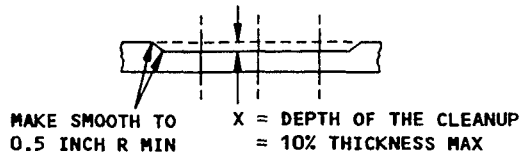

SECTION C-C

DAMAGE CLEANUP
DETAIL IX

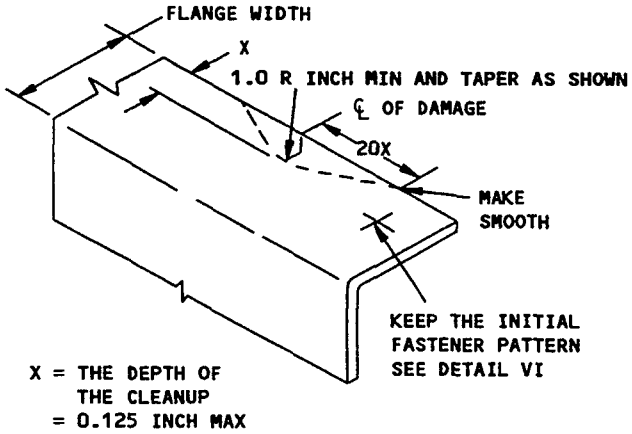

REMOVAL OF DAMAGE ON AN EDGE
DETAIL X

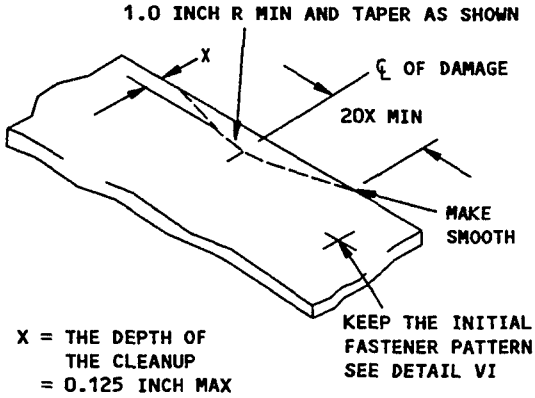

REMOVAL OF DAMAGE ON AN EDGE
DETAIL XI

Keel Beam Structure Allowable Damage
Figure 7 (Sheet 13)

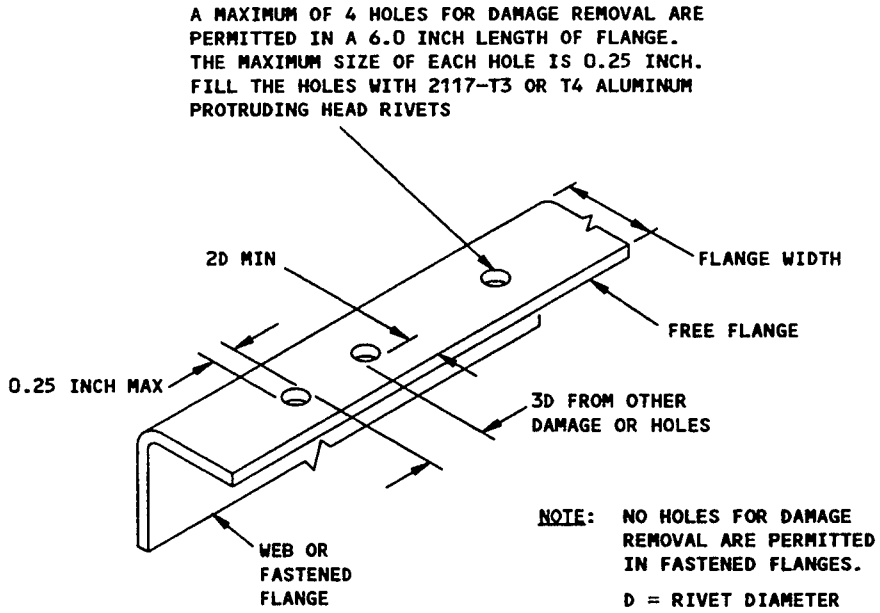

HOLES PERMITTED FOR DAMAGE REMOVAL IN FREE FLANGES
DETAIL XII

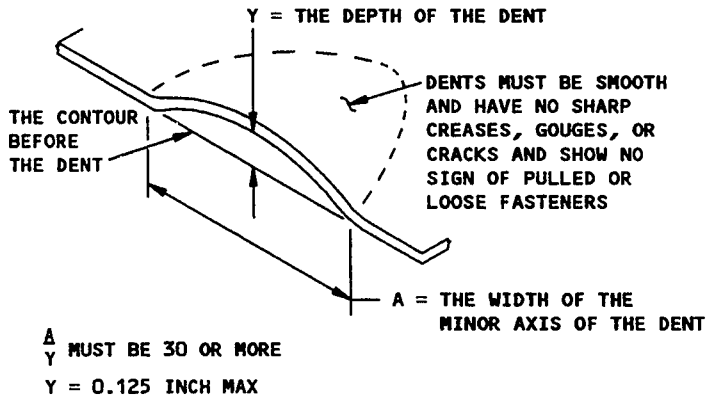

DENT DAMAGE PERMITTED
DETAIL XIII

Keel Beam Structure Allowable Damage
Figure 7 (Sheet 14)

INSTRUCTIONS

NOTE: AN EXAMPLE IS GIVEN WITH THE STEPS THAT FOLLOW TO HELP SHOW HOW THE BLEND LIMIT TABLES VI THRU X ARE TO BE USED.

1. FIND THE AIRPLANE MODEL (OR EFFECTIVITY), THE BODY STATION LOCATION, AND THE BLENDED DEPTHS AFTER THE CORROSION HAS BEEN REMOVED.

EXAMPLE

AIRPLANE MODEL: 737-200 BGW (OR EFFECTIVITY: P2550)
LOCATION OF CORROSION: BS 756

CORROSION CONFIGURATION:

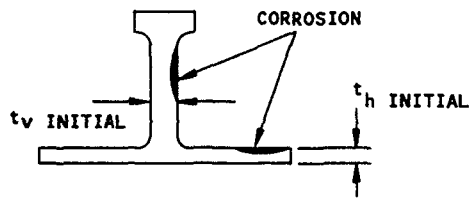

$t_{v\ INITIAL}$ = INITIAL PRODUCTION THICKNESS OF VERTICAL FLANGE

$t_{h\ INITIAL}$ = INITIAL PRODUCTION THICKNESS OF HORIZONTAL FLANGE

AFTER BLENDOUT:

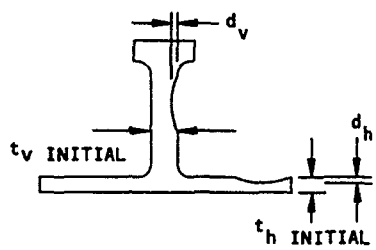

d_v = 0.05 inch (VERTICAL FLANGE MAXIMUM BLENDED DEPTH)

d_h = 0.03 inch (HORIZONTAL FLANGE MAXIMUM BLENDED DEPTH)

2. FIND THE APPLICABLE BLEND CONFIGURATION AND THE INITIAL PRODUCTION THICKNESS. THE APPLICABLE BLEND CONFIGURATION MUST INCLUDE ALL BLENDOUTS THAT HAVE BEEN MADE AT THE SAME CROSS-SECTION.

EXAMPLE

THE EXAMPLE BLENDOUT HAS ONE VERTICAL FLANGE BLENDED AND ONE HORIZONTAL FLANGE BLENDED; AS A RESULT, THE CONFIGURATION IS 1HV (H IS FOR HORIZONTAL AND V IS FOR VERTICAL). THE INITIAL THICKNESSES AT THIS LOCATION ARE:

$t_{v\ INITIAL}$ = 0.205 inch

$t_{h\ INITIAL}$ = 0.15 inch

REMOVAL OF DAMAGE FROM THE KEEL BEAM LOWER CHORDS
DETAIL XIV

Keel Beam Structure Allowable Damage
Figure 7 (Sheet 15)

3. FIND THE MAXIMUM BLEND LIMIT. GO INTO THE APPLICABLE BLEND LIMIT TABLE AT THE BODY STATION OF THE BLENDOUT.

BLEND LIMIT TABLE INDEX		
MODEL	BASIC NUMBER	TABLE
737-100 BGW	P0001 - P0025	VI
737-100 HGW	P0901 - P0905	VII
737-200 BGW	P2501 - P2716; P2801 - P3499	VIII
737-200 HGW	P3501 - P3514; P3601 - P4353; P4401 - P4419	IX
737-200C/C HGW	P8501 - P8502; P8801 - P8826; P8901 - P8978	X

EXAMPLE

GO INTO TABLE VIII FOR THE 737-200 BGW (OR P2550) EFFECTIVITY AT BS 756 AND READ THE VALUE THAT IS GIVEN FOR THE 1HV BLEND. THE MAXIMUM BLEND LIMIT IS 0.30 X $t_{INITIAL}$.

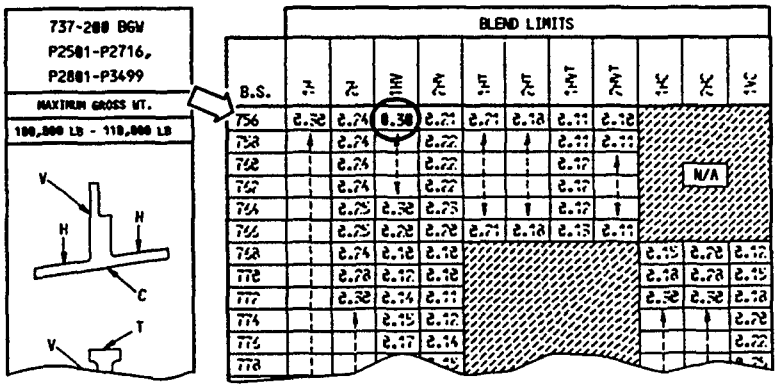

4. CALCULATE THE MAXIMUM BLENDOUT DEPTH.

EXAMPLE

VERTICAL FLANGE: $0.30 \times t_{v\ INITIAL}$ = 0.30 (0.205 inch) = 0.062 inch
HORIZONTAL FLANGE: $0.30 \times t_{h\ INITIAL}$ = 0.30 (0.15 inch) = 0.045 inch

5. COMPARE THE MAXIMUM BLENDOUT DEPTH WITH THE BLENDED DEPTH.

EXAMPLE

FLANGE	BLENDED DEPTH	MAXIMUM BLENDOUT DEPTH	
VERTICAL	0.05 inch	0.062 inch	BLENDED DEPTH < MAXIMUM OK!
HORIZONTAL	0.03 inch	0.045 inch	BLENDED DEPTH < MAXIMUM OK!

REMOVAL OF DAMAGE FROM THE KEEL BEAM LOWER CHORDS
DETAIL XIV (Continued)

Keel Beam Structure Allowable Damage
Figure 7 (Sheet 16)

KEEL BEAM LOWER CHORD BLEND CONFIGURATIONS [1]

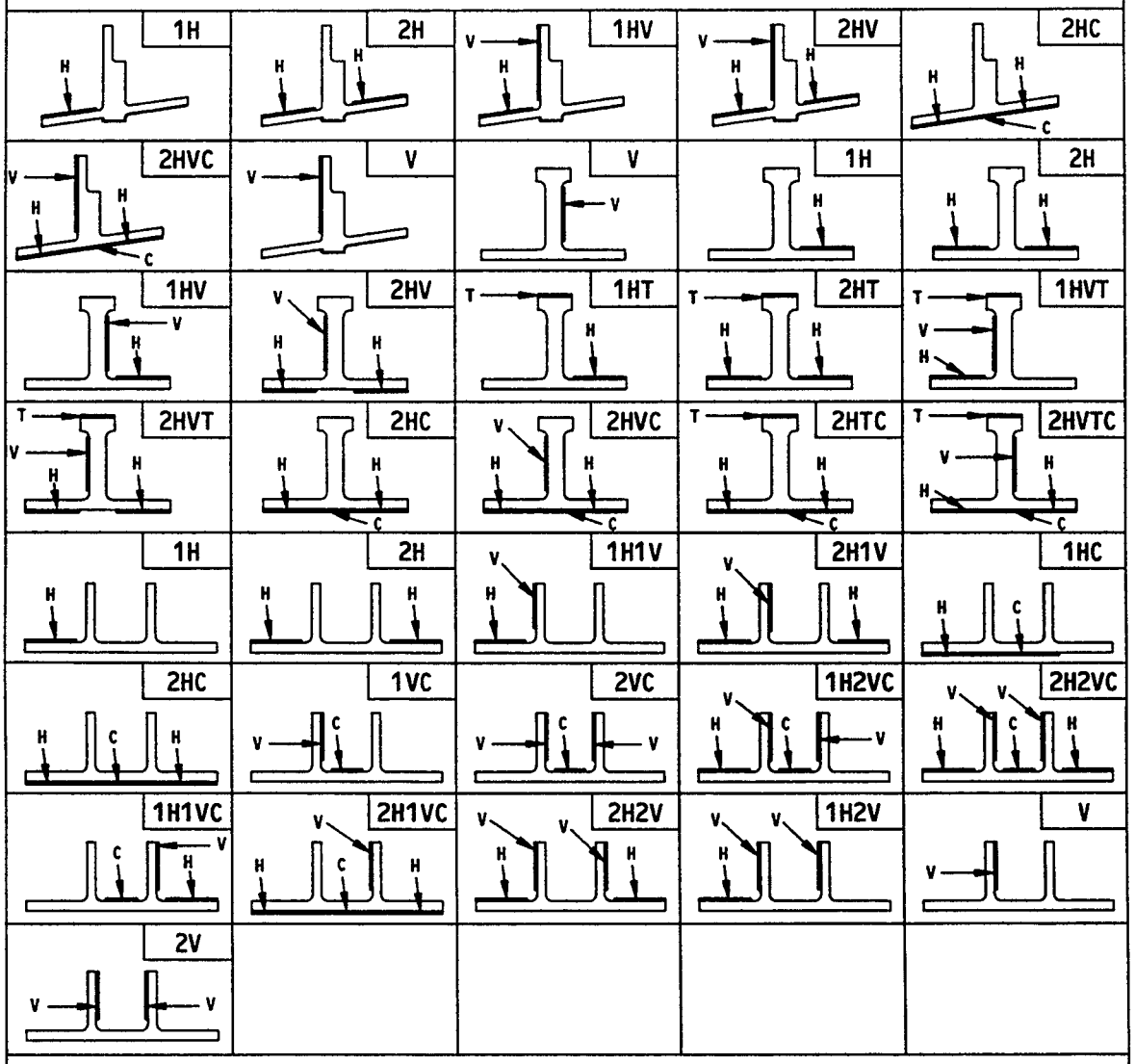

[1] THE BLENDS CAN BE LOCATED ON:
- THE UPPER OR LOWER SURFACES OF THE HORIZONTAL FLANGES
- THE INBOARD OR OUTBOARD SURFACES FOR THE VERTICAL FLANGES.

REFER TO SRM 51-10-6 FOR THE CORROSION REMOVAL PROCEDURES. SHOT PEEN/FLAP PEEN THE REWORKED SURFACES AS GIVEN IN SOPM 20-10-03.

REMOVAL OF DAMAGE FROM THE KEEL BEAM LOWER CHORDS
DETAIL XIV (Continued)

Keel Beam Structure Allowable Damage
Figure 7 (Sheet 17)

KEEL BEAM LOWER CHORD FLANGE THICKNESS DEFINITIONS

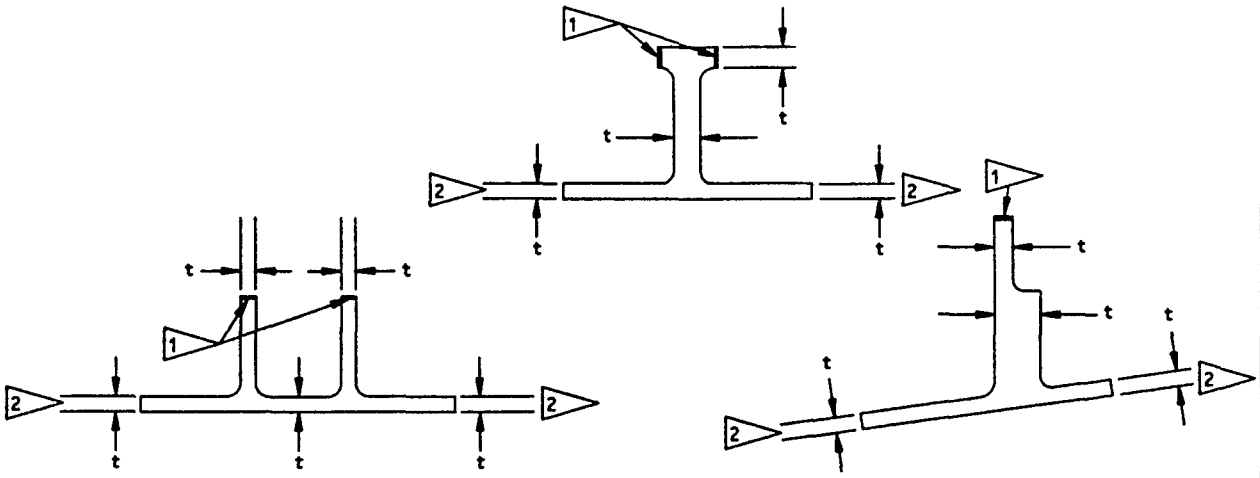

1 REMOVAL OF EDGE DAMAGE AS GIVEN IN DETAIL VI IS NOT PERMITTED AT THESE LOCATIONS (APPLICABLE TO "J" SECTIONS ALSO).

2 REMOVAL OF HORIZONTAL FLANGE EDGE DAMAGE AS GIVEN IN DETAIL VI IS PERMITTED AT THE INBOARD OR OUTBOARD EDGE ONLY, NOT THE TWO TOGETHER (REMOVAL OF HORIZONTAL FLANGE EDGE DAMAGE AFT OF THE SPLICE (BS 743 (737-100), BS 727+16 (737-200)) DECREASES THE MAXIMUM KEEL BEAM BLENDOUT LIMIT TO 10% OF THE FLANGE THICKNESS AT THAT LOCATION).

KEEL BEAM LOWER CHORD DRAWING NUMBERS (AS-DELIVERED PRODUCTION DRAWINGS)

BASIC NUMBER	BS 743 - FWD (-100's) BS 727+16 - FWD (-200's)	BS 743 - AFT (-100's) BS 727+16 - AFT (-200's)
P0001-P0025 P0901-P0905	65-45868-1,-3	65-46599-1
P2501-P2716 P2801-P3499	65-55767-1,-3	65-47693-1
P3501-P3514 P3601-P3633	65-62125-501,-29	65-47693-501
P3634-P3978		65-47693-5
P3979-P4353		65-47693-7
P4401-P4412		65-47693-501
P4413-P4419		65-47693-5
P8501-P8502 P8801-P8826 P8901-P8913	65-62125-1,-27	65-47693-501
P8914-P8978		65-47693-5

REMOVAL OF DAMAGE FROM THE KEEL BEAM LOWER CHORDS
DETAIL XIV (Continued)

Keel Beam Structure Allowable Damage
Figure 7 (Sheet 18)

737-100 BGW
P0001-P0025

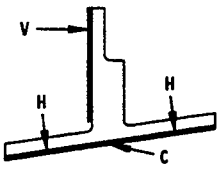

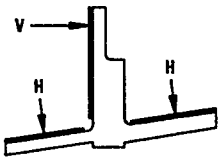

MULTIPLY THE BLEND LIMIT BY THE NOMINAL DELIVERED PRODUCTION THICKNESS TO GET THE MAXIMUM THICKNESS THAT CAN BE REMOVED.

	BLEND LIMITS							
B.S.	1H	2H/ 2HC	1HV/V	2HV/ 2HVC	1HT	2HT	1HVT	2H1VT
500					N/A			
502								
504								
506	0.30	0.30	0.30	0.30				
508	0.30	0.30	0.30	0.30				
510	0.28	0.29	0.28	0.28				
512	0.26	0.29	0.26	0.26				
514	0.28	0.30	0.28	0.28				
516	0.30		0.30	0.30				
518								
520								
522								
524								
526								
528								
530								
532								
534								
536								
538								
540								
542								
544		0.30	0.3	0.3				
546			0.28					
548		N/A	0.26	N/A				
550			0.26					
552			0.30					
554	0.30		0.30					

NOTE: THE 2HC AND 2HVC BLEND CONFIGURATIONS ARE ONLY APPLICABLE IN LOCATIONS BS 534 AND FORWARD

TABLE VI

Keel Beam Structure Allowable Damage
Figure 7 (Sheet 19)

737-100 BGW
P0001-P0025

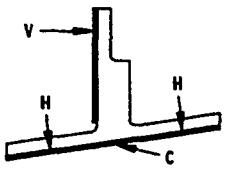

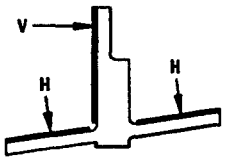

MULTIPLY THE BLEND LIMIT BY THE NOMINAL DELIVERED PRODUCTION THICKNESS TO GET THE MAXIMUM THICKNESS THAT CAN BE REMOVED.

	BLEND LIMITS							
B.S.	1H	2H	1HV/V	2HV	1HT	2HT	1HVT	2HVT
556	0.30		0.30					
558								
560								
562								
564								
566								
568								
570								
572								
574								
576								
578								
580		N/A				N/A		
582								
584								
586								
588								
590								
592								
594								
596								
598								
600								
602								
604								
606								
608								
610	0.30		0.30					

TABLE VI (CONTINUED)

Keel Beam Structure Allowable Damage
Figure 7 (Sheet 20)

737-100 BGW
P0001-P0025

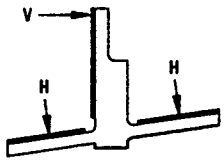

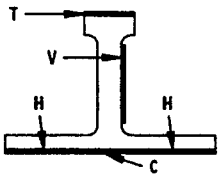

MULTIPLY THE BLEND LIMIT BY THE NOMINAL DELIVERED PRODUCTION THICKNESS TO GET THE MAXIMUM THICKNESS THAT CAN BE REMOVED.

	BLEND LIMITS							
B.S.	1H	2H	1HV/V	2HV	1HT	2HT	1HVT	2HVT
612	0.30		0.30					
614								
616								
618								
620								
622								
624		N/A		N/A				
626								
628								
630								
632			0.30					
634	0.30		0.27					
636	0.25		0.19			N/A		
638	0.30		0.25					
640	0.30		0.30					
642	0.25		0.25					
644			0.25					
646			0.23					
648	0.25	0.23	0.25	0.21				
650	0.30	0.26	0.28	0.23				
652		0.29	0.28	0.23				
654		0.30	0.29	0.24				
656			0.30	0.29				
658			0.30	0.30				
660	0.30	0.30	0.30	0.30				
662	0.25	0.25	0.25	0.25				
664	0.18	0.18	0.18	0.18				
666	0.19	0.19	0.19	0.19				

TABLE VI (CONTINUED)

Keel Beam Structure Allowable Damage
Figure 7 (Sheet 21)

737-100 BGW
P0001-P0025

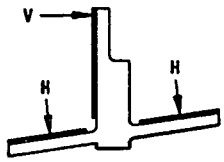

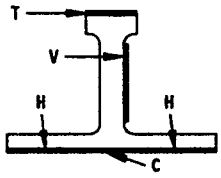

MULTIPLY THE BLEND LIMIT BY THE NOMINAL DELIVERED PRODUCTION THICKNESS TO GET THE MAXIMUM THICKNESS THAT CAN BE REMOVED.

	BLEND LIMITS							
B.S.	1H	2H	1HV/V	2HV	1HT	2HT	1HVT	2HVT
668	0.20	0.20	0.20	0.20				
670	0.21	0.21	0.21	0.21				
672	0.23	0.23	0.23	0.22				
674	0.24	0.24	0.24	0.19				
676	0.25	0.25	0.23	0.18				
678	0.26	0.26	0.20	0.16				
680	0.27	0.27	0.18	0.14				
682	0.28	0.28	0.16	0.13				
684	0.29	0.29	0.14	0.11				
686	0.30	0.30	0.13	0.10				
688		0.29	0.11	0.10				
690		0.27	0.10	0.10				
692		0.30	0.15	0.13				
694		0.23	0.12	0.12		N/A		
696	0.30	0.22	0.13	0.11				
698	0.28	0.20	0.13	0.10				
700	0.27	0.19	0.12					
702	0.25	0.18	0.12					
704	0.24	0.17	0.11					
706	0.23	0.16	0.11					
708	0.22	0.15	0.11					
710	0.21	0.15	0.11					
712	0.20	0.15	0.11					
714	0.20	0.15	0.11					
716	0.20	0.14	0.12					
718	0.20	0.14	0.12					
720	0.19	0.14	0.12					
722	0.20	0.15	0.13	0.10				

TABLE VI (CONTINUED)

Keel Beam Structure Allowable Damage
Figure 7 (Sheet 22)

737-100 BGW
P0001-P0025

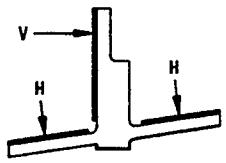

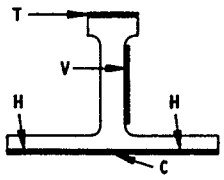

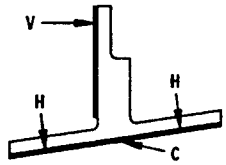

MULTIPLY THE BLEND LIMIT BY THE NOMINAL DELIVERED PRODUCTION THICKNESS TO GET THE MAXIMUM THICKNESS THAT CAN BE REMOVED.

	BLEND LIMITS											
B.S.	1H	2H	1HV/V	2HV	1HT	2HT	1HVT	2HVT	2HC	2HVC	2HTC	2HVTC
724	0.20	0.15	0.14	0.11	N/A							
726	0.21	0.21	0.21	0.17								
728	0.20	0.18	0.17	0.15					0.17	0.15		
730	0.22	0.20	0.21	0.17					0.19	0.16		
732	0.27	0.24	0.13	0.12					0.23	0.12		
734	0.20	0.20	0.10	0.10					0.20	0.10		
736	0.10	0.10	0.10	0.10					0.10	0.10		
738	0.10	0.10	0.10	0.10					0.10	0.10		
740	SPLICE AREA BS 740 - BS 746 NO BLENDING ALLOWED! CONTACT BOEING											
742												
744												
746												
748	0.20	0.18	0.17	0.11	0.20	0.18	0.19	0.11	0.13	0.10	0.12	0.10
750	0.28	0.28	0.28	0.18	0.28	0.28	0.28	0.17	0.23	0.14	0.21	0.13
752	0.30	0.30	0.30	0.23	0.30	0.30	0.30	0.23	0.30	0.20	0.30	0.19
754	0.30	0.30	0.30	0.29	0.30	0.30	0.30	0.28	0.30	0.28	0.30	0.25
756	0.30	0.20	0.30	0.20	0.25	0.20	0.20	0.20	0.20	0.20	0.20	0.20
758	0.28	0.12	0.13	0.10	0.17	0.12	0.10	0.10	0.12	0.10	0.11	0.10
760	0.30	0.20	0.25	0.17	0.19	0.17	0.19	0.14	0.20	0.17	0.17	0.14
762	↑	0.19	0.24	0.17	0.30	0.19	0.19	0.14	0.19	0.17	0.19	0.14
764		0.19	0.27	0.18	↑	0.19	0.21	0.15	0.19	0.18	0.19	0.15
766		0.23	0.30	0.20		0.23	0.26	0.17	0.19	0.18	0.19	0.16
768		0.21	0.26	0.19		0.19	0.18	0.15	0.19	0.21	0.18	0.11
770		0.23	0.30	0.22		0.21	0.22	0.18	0.22	0.25	0.21	0.13
772		0.26	↑	0.25		0.23	0.26	0.20	0.26	0.29	0.23	0.14
774		0.28		0.27		0.25	0.30	0.22	0.28	0.30	0.25	0.16
776	↓	0.30	↓	0.30	↓	0.27	0.30	0.25	0.30	0.30	0.27	0.18
778	0.30	0.30	0.30	0.30	0.30	0.29	0.30	0.27	0.30	0.30	0.30	0.19

TABLE VI (CONTINUED)

Keel Beam Structure Allowable Damage
Figure 7 (Sheet 23)

737-100 BGW
P0001-P0025

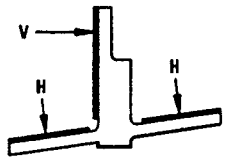

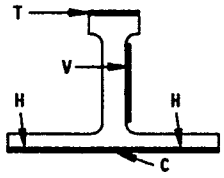

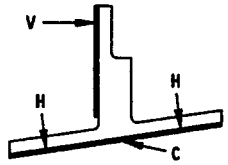

MULTIPLY THE BLEND LIMIT BY THE NOMINAL DELIVERED PRODUCTION THICKNESS TO GET THE MAXIMUM THICKNESS THAT CAN BE REMOVED.

	BLEND LIMITS											
B.S.	1H	2H	1HV/V	2HV	1HT	2HT	1HVT	2HVT	2HC	2HVC	2HTC	2HVTC
780	0.30	0.30	0.30	0.30	0.30	0.29	0.30	0.26	0.30	0.30	0.29	0.18
782	↑	↑	↑	0.30	↑	0.29	↑	0.26	↑	0.25	0.29	0.17
784				0.24	↓	0.27	↓	0.23	↓	0.15	0.27	0.13
786				0.23	0.30	0.22	0.30	0.22	0.30	0.11	0.22	0.10
788				0.21	N/A				0.27	0.10	N/A	
790				0.28					0.30	0.15		
792				0.30					↑	0.16		
794	↓	↓	↓	0.30					↓	0.17		
796	0.30	0.30	0.30	0.30					0.30	0.18		

TABLE VI (CONTINUED)

Keel Beam Structure Allowable Damage
Figure 7 (Sheet 24)

H19734

737-100 HGW
P0901-P0905

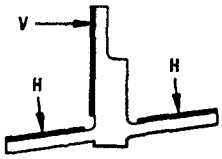

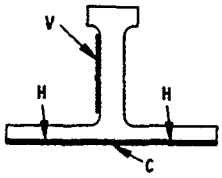

MULTIPLY BLEND LIMIT BY THE NOMINAL DELIVERED PRODUCTION THICKNESS TO GET THE MAXIMUM THICKNESS THAT CAN BE REMOVED.

	BLEND LIMITS							
B.S.	1H	2H/ 2HC	1HV/V	2HV/ 2HVC	1HT	2HT	1HVT	2HVT
500					N/A			
502								
504								
506	0.30	0.30	0.30	0.30				
508	0.30	0.30	0.30	0.30				
510	0.26	0.27	0.26	0.26				
512	0.28	0.29	0.27	0.27				
514	0.30	0.30	0.30	0.30				
516								
518								
520								
522								
524								
526								
528								
530								
532								
534								
536								
538								
540								
542								
544		0.30	0.30	0.30				
546		N/A	0.27	N/A				
548			0.25					
550			0.25					
552			0.30					
554	0.30		0.30					

NOTE: THE 2HC AND 2HVC BLEND CONFIGURATIONS ARE ONLY APPLICABLE IN LOCATIONS BS 534 AND FORWARD

TABLE VII

Keel Beam Structure Allowable Damage
Figure 7 (Sheet 25)

737-100 HGW
P0901-P0905

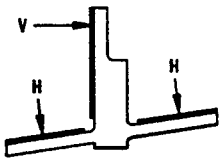

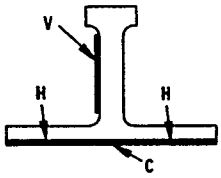

MULTIPLY BLEND LIMIT BY THE NOMINAL DELIVERED PRODUCTION THICKNESS TO OBTAIN MAXIMUM THICKNESS THAT CAN BE REMOVED.

	BLEND LIMITS							
B.S.	1H	2H	1HV/V	2HV	1HT	2HT	1HVT	2HVT
556	0.30		0.30					
558								
560								
562								
564								
566								
568								
570								
572								
574								
576								
578								
580		N/A				N/A		
582								
584								
586								
588								
590								
592								
594								
596								
598								
600								
602								
604								
606								
608								
610	0.30		0.30					

TABLE VII (CONTINUED)

Keel Beam Structure Allowable Damage
Figure 7 (Sheet 26)

737-100 HGW
P0901-P0905

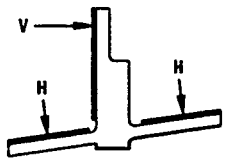

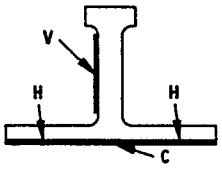

MULTIPLY THE BLEND LIMIT BY THE NOMINAL DELIVERED PRODUCTION THICKNESS TO GET THE MAXIMUM THICKNESS THAT CAN BE REMOVED.

	BLEND LIMITS							
B.S.	1H	2H	1HV/V	2HV	1HT	2HT	1HVT	2HVT
612	0.30		0.30					
614								
616								
618								
620								
622								
624								
626								
628		N/A		N/A				
630								
632			0.30					
634	0.30		0.27					
636	0.24		0.18			N/A		
638	0.30		0.28					
640	0.30		0.30					
642	0.25		0.25					
644			0.25					
646		0.25	0.22	0.22				
648	0.25	0.23	0.25	0.20				
650	0.30	0.25	0.27	0.22				
652		0.28	0.26	0.22				
654		0.30	0.27	0.23				
656			0.30	0.28				
658			0.30	0.30				
660	0.30	0.30	0.30	0.30				
662	0.25	0.25	0.25	0.25				
664	0.18	0.18	0.18	0.18				
666	0.19	0.19	0.19	0.19				

TABLE VII (CONTINUED)

Keel Beam Structure Allowable Damage
Figure 7 (Sheet 27)

737-100 HGW
P0901-P0905

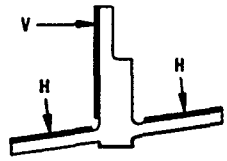

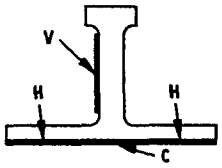

MULTIPLY THE BLEND LIMIT BY THE NOMINAL DELIVERED PRODUCTION THICKNESS TO GET THE MAXIMUM THICKNESS THAT CAN BE REMOVED.

	BLEND LIMITS							
B.S.	1H	2H	1HV/V	2HV	1HT	2HT	1HVT	2HVT
668	0.20	0.20	0.20	0.20				
670	0.21	0.21	0.21	0.21				
672	0.23	0.23	0.23	0.21				
674	0.24	0.24	0.24	0.19				
676	0.25	0.25	0.22	0.17				
678	0.26	0.26	0.19	0.15				
680	0.27	0.27	0.17	0.13				
682	0.28	0.28	0.15	0.12				
684	0.29	0.29	0.13	0.10				
686	0.30	0.30	0.12	↑				
688	↑	0.29	0.10	↓				
690		0.26	0.10	0.10				
692		0.25	0.15	0.12		N/A		
694	↓	0.23	0.12	0.11				
696	0.30	0.21	0.13	0.10				
698	0.28	0.20	0.12	↑				
700	0.26	0.18	0.11					
702	0.24	0.17	0.10					
704	0.23	0.16	↑					
706	0.22	0.15						
708	0.21	0.15						
710	0.20	0.14						
712	0.19	↑						
714	↑							
716		↓						
718		0.14						
720	↓	0.13	↓	↓				
722	0.19	0.14	0.10	0.10				

TABLE VII (CONTINUED)

Keel Beam Structure Allowable Damage
Figure 7 (Sheet 28)

H19752

737-100 HGW
P0901-P0905

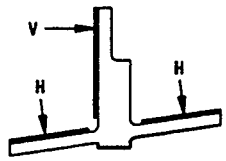

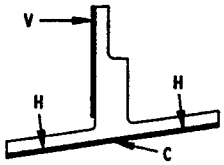

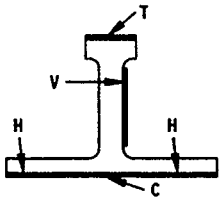

MULTIPLY THE BLEND LIMIT BY THE NOMINAL DELIVERED PRODUCTION THICKNESS TO GET THE MAXIMUM THICKNESS THAT CAN BE REMOVED.

	BLEND LIMITS											
B.S.	1H	2H	1HV/V	2HV	1HT	2HT	1HVT	2HVT	2HC	2HVC	2HTC	2HVTC
724	0.19	0.14	0.13	0.10	N/A							
726	0.30	0.21	0.20	0.16								
728	0.19	0.17	0.17	0.15					0.17	0.14		
730	0.24	0.21	0.22	0.19					0.21	0.18		
732	0.28	0.25	0.15	0.12					0.25	0.12		
734	0.20	0.20	0.10	0.10					0.20	0.10		
736	0.13	0.10	0.10	0.10					0.10	0.10		
738	0.10	0.10	0.10	0.10					0.10	0.10		
740	SPLICE AREA BS 740 - BS 746 NO BLENDING ALLOWED! CONTACT BOEING											
742												
744												
746												
748	0.20	0.18	0.19	0.12	0.20	0.18	0.21	0.12	0.13	0.10	0.13	0.10
750	0.25	0.25	0.25	0.19	0.25	0.25	0.29	0.18	0.24	0.15	0.23	0.15
752	0.30	0.30	0.30	0.24	0.30	0.30	0.30	0.23	0.30	0.22	0.30	0.21
754	0.30	0.30	0.30	0.30	0.30	0.30	0.30	0.29	0.30	0.29	0.30	0.27
756	0.30	0.30	0.25	0.20	0.30	0.30	0.20	0.20	0.20	0.20	0.20	0.20
758	0.30	0.15	0.18	0.13	0.19	0.16	0.13	0.10	0.19	0.13	0.16	0.10
760	0.21	0.10	0.10	0.10	0.16	0.10	0.11	0.10	0.10	0.10	0.10	0.10
762	0.26	0.11	0.14	0.10	0.23	0.11	0.16	0.10	0.11	0.10	0.11	0.10
764	0.30	0.22	0.30	0.21	0.30	0.22	0.30	0.21	0.22	0.21	0.22	0.21
766	↑	0.19	0.30	0.19	0.30	0.19	0.24	0.19	0.17	0.17	0.19	0.19
768		0.20	0.24	0.20	0.18	0.16	0.11	0.10	0.18	0.20	0.17	0.10
770		0.22	0.28	0.22	0.20	0.18	0.13	0.11	0.21	0.24	0.20	0.11
772		0.25	0.30	0.25	0.23	0.20	0.15	0.13	0.25	0.27	0.23	0.13
774		0.28	↑	0.28	0.25	0.21	0.17	0.14	0.27	0.30	0.26	0.14
776	↓	0.30	↓	0.30	0.28	0.23	0.19	0.16	0.30	0.30	0.29	0.16
778	0.30	0.30	0.30	0.30	0.30	0.25	0.21	0.18	0.30	0.30	0.30	0.18

TABLE VII (CONTINUED)

Keel Beam Structure Allowable Damage
Figure 7 (Sheet 29)

737-100 HGW
P0901-P0905

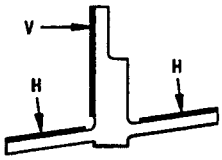

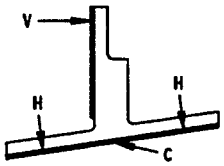

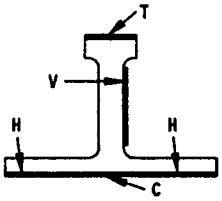

MULTIPLY THE BLEND LIMIT BY THE NOMINAL DELIVERED PRODUCTION THICKNESS TO GET THE MAXIMUM THICKNESS THAT CAN BE REMOVED.

	BLEND LIMITS											
B.S.	1H	2H	1HV/V	2HV	1HT	2HT	1HVT	2HVT	2HC	2HVC	2HTC	2HVTC
780	0.30	0.30	0.30	0.30	0.30	0.26	0.20	0.17	0.30	0.30	0.26	0.17
782	↑	↑	0.28	0.24	↑	0.28	0.19	0.15	↑	0.25	0.25	0.15
784	↓	↓	0.17	0.15	↓	0.27	0.15	0.12	↓	0.15	0.27	0.12
786			0.12	0.11	0.30	0.23	0.13	0.10	0.30	0.11	0.23	0.10
788			0.11	0.10					0.29	0.10		
790			0.15	0.15					0.30	0.15		
792			0.16	0.15		N/A			↑	0.17	N/A	
794			0.17	0.16					↓	0.17		
796	0.30	0.30	0.18	0.17					0.30	0.18		

TABLE VII (CONTINUED)

Keel Beam Structure Allowable Damage
Figure 7 (Sheet 30)

H19761

737-200 BGW
P2501-P2716,
P2801-P3499

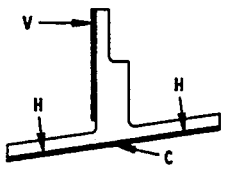

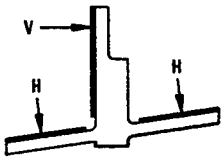

MULTIPLY THE BLEND LIMIT BY THE NOMINAL DELIVERED PRODUCTION THICKNESS TO GET THE MAXIMUM THICKNESS THAT CAN BE REMOVED.

	BLEND LIMITS			
B.S.	1H	2H/ 2HC	1HV/V	2HV/ 2HVC
500A				
500A+2				
500A+4				
500A+6				
500A+8				
500A+10				
500A+12	0.30	0.30	0.30	0.30
500A+14	↑	↑	↑	↑
500A+16				
500B				
500B+2				
500B+4				
500B+6				
500B+8				
500B+10				
500B+12				
500B+14				
500B+16				
520				
522				
524				
526				
528				
530				
532	↓	↓	↓	↓
534	0.30	0.30	0.30	0.30

	BLEND LIMITS			
B.S.	1H	2H	1HV/V	2HV
536	0.30	0.30	0.30	0.30
538	↑	↑	↑	↑
540				
542		↓		↓
544		0.30		0.30
546				
548				
550				
552				
554				
556				
558				
560				
562				
564				
566		N/A		N/A
568				
570				
572				
574				
576				
578				
580				
582				
584	↓		↓	
586	0.30		0.30	

NOTE: THE 2HC AND 2HVC BLEND CONFIGURATIONS ARE ONLY APPLICABLE IN LOCATIONS BS 534 AND FORWARD

TABLE VIII

Keel Beam Structure Allowable Damage
Figure 7 (Sheet 31)

737-200 BGW
P2501-P2716,
P2801-P3499

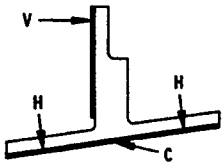

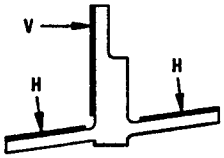

MULTIPLY THE BLEND LIMIT BY THE NOMINAL DELIVERED PRODUCTION THICKNESS TO GET THE MAXIMUM THICKNESS THAT CAN BE REMOVED.

	BLEND LIMITS			
B.S.	1H	2H	1HV/V	2HV
588	0.30		0.30	
590				
592				
594				
596				
598				
600				
602				
604				
606				
608				
610				
612				
614				
616				
618				
620		N/A		N/A
622			0.30	
624	0.30		0.29	
626	0.29		0.28	
628	0.29		0.29	
630	0.28		0.28	
632	0.26		0.26	
634	0.25		0.25	
636	0.16		0.14	
638	0.22		0.22	

	BLEND LIMITS			
B.S.	1H	2H	1HV/V	2HV
640	0.25		0.25	
642		N/A	0.25	N/A
644			0.21	
646	0.25	0.25	0.16	0.16
648	0.25	0.26	0.22	0.18
650	0.30	0.26	0.20	0.16
652		0.26	0.18	0.15
654		0.24	0.15	0.12
656		0.30	0.22	0.18
658			0.24	0.22
660			0.30	0.27
662	0.30		0.30	0.30
664			0.27	0.21
666		0.30	0.25	0.19
668		0.26	0.22	0.16
670		0.23	0.19	0.14
672		0.25	0.19	0.14
674		0.27	0.18	0.14
676		0.28	0.16	0.12
678		0.30	0.15	0.11
680		0.30	0.13	0.10
682		0.29	0.12	0.10
684		0.26	0.11	0.10
686		0.24	0.11	0.11
688		0.23	0.13	0.12
690	0.30	0.22	0.14	0.10

TABLE VIII (CONTINUED)

Keel Beam Structure Allowable Damage
Figure 7 (Sheet 32)

737-200 BGW
P2501-P2716,
P2801-P3499

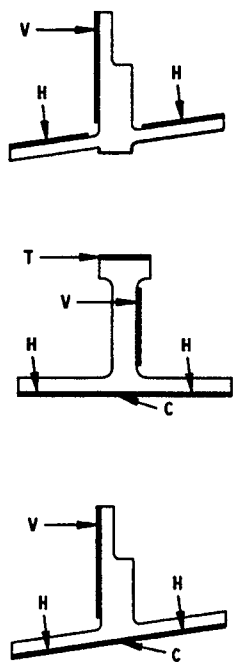

MULTIPLY THE BLEND LIMIT BY THE NOMINAL DELIVERED PRODUCTION THICKNESS TO GET THE MAXIMUM THICKNESS THAT CAN BE REMOVED.

	BLEND LIMITS							
B.S.	1H	2H	1HV/V	2HV	2HC	2HVC	2HTC	2HVTC
692	0.30	0.18	0.11	0.10				
694	0.30	0.19	0.12					
696	0.30	0.18	0.11					
698	0.29	0.16	0.10					
700	0.28	0.15						
702	0.26	0.15						
704	0.25	0.15						
706	0.24	0.14						
708	0.23	0.14						
710	0.22	0.13						
712	0.21		0.10					
714	0.20		0.11					
716	0.19		0.11					
718	0.20	0.13	0.12					
720		0.14	0.13	0.10				
722		0.14	0.14	0.11				
724	0.20	0.15	0.16	0.15				
726	0.24	0.21	0.23	0.17				
727+1	0.25	0.23	0.23	0.21	0.22	0.20		
727+3	0.26	0.24	0.26	0.21	0.23	0.20		
727+5	0.29	0.27	0.23	0.20	0.25	0.19		
727+7	0.30	0.29	0.16	0.14	0.28	0.14		
727+9	0.30	0.20	0.11	0.10	0.20	0.10		
727+11	0.20	0.10	0.10	0.10	0.10	0.10		
727+13	NO BLENDING IN SPLICE AREA (CONTACT BOEING) BS 727+13 TO BS 727+19							
727+15								

N/A

TABLE VIII (CONTINUED)

Keel Beam Structure Allowable Damage
Figure 7 (Sheet 33)

737-200 BGW
P2501-P2716,
P2801-P3499

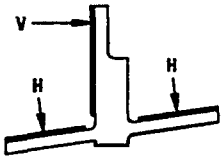

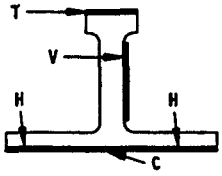

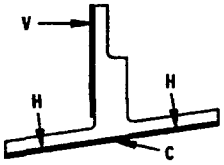

MULTIPLY THE BLEND LIMIT BY THE NOMINAL DELIVERED PRODUCTION THICKNESS TO GET THE MAXIMUM THICKNESS THAT CAN BE REMOVED.

	BLEND LIMITS											
B.S.	1H	2H	1HV/V	2HV	1HT	2HT	1HVT	2HVT	2HC	2HVC	2HTC	2HVTC
727+17	NO BLENDING IN SPLICE AREA (CONTACT BOEING) BS 727+13 TO BS 727+19											
727+19												
727A+1	0.20	0.20	0.15	0.10		N/A			0.20	0.10	0.20	0.11
727A+3	0.30	0.30	0.30	0.21	0.30	0.30	0.29	0.21	0.30	0.21	0.30	0.21
727A+5	↑	↑	↑	0.30	↑	↑	0.30	0.30	↑	0.30	↑	0.29
727A+7	↕	↕	↓	0.30	↕	↓	0.30	0.30	↓	0.30	↓	0.30
727A+9	↕	↕	0.30	0.30	↕	0.30	0.30	0.30	0.30	0.30	0.30	0.30
727A+11	↕	↕	0.23	0.20	↕	0.26	0.19	0.15	0.30	0.19	0.25	0.15
727A+13	↕	↕	0.26	0.22	↕	0.30	0.23	0.20	0.30	0.21	0.30	0.19
727A+15	↕	↕	0.26	0.21	↕	↑	0.23	0.19	↑	0.21	↑	0.19
727A+17	↕	↕	0.26	0.21	↕	↕	0.23	0.20	↕	0.21	↕	0.19
727A+19	↕	↕	0.18	0.17	↕	↕	0.14	0.14	↕	0.17	↕	0.14
727B+1	↕	↕	0.30	0.30	↕	↕	0.25	0.25	↕	0.30	↕	0.25
727B+3	↕	↕	↑	↑	↕	↕	0.25	0.24	↕	↑	↕	0.24
727B+5	↕	↕	↕	↕	↕	↕	0.25	0.25	↕	↕	↕	0.25
727B+7	↕	↕	↕	↕	↕	↕	0.26	0.24	↕	↕	↕	↑
727B+9	↕	↕	↕	↕	↕	↕	0.26	0.25	↕	↕	↕	↓
727B+11	↕	↕	↕	↕	↕	↕	0.26	↑	↕	↕	↕	0.25
727B+13	↕	↕	↕	↕	↕	↕	0.27	↕	↕	↕	↕	0.26
727B+15	↕	↕	↕	↕	↕	↕	0.27	↓	↕	↕	↕	0.26
727B+17	↕	↓	↕	↓	↓	↓	0.27	0.25	↓	↓	↓	0.26
727B+19	↕	0.30	↕	0.30	0.30	0.30	0.20	0.20	0.30	0.30	0.30	0.20
748	↕	0.23	↕	0.20	0.21	0.20	0.10	0.10	0.20	0.20	0.20	0.10
750	↕	0.23	↕	0.20	↑	0.20	0.10	↑	↑	0.20	0.20	↑
752	↓	0.23	↓	0.20	↓	0.19	0.11	↓	↓	0.20	0.19	↓
754	0.30	0.24	0.30	0.21	0.21	0.18	0.11	0.10	0.21	0.21	0.18	0.10

TABLE VIII (CONTINUED)

Keel Beam Structure Allowable Damage
Figure 7 (Sheet 34)

737-200 BGW
P2501-P2716,
P2801-P3499

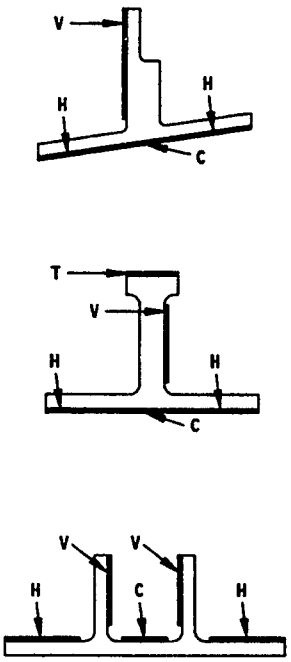

MULTIPLY THE BLEND LIMIT BY THE NOMINAL DELIVERED PRODUCTION THICKNESS TO GET THE MAXIMUM THICKNESS THAT CAN BE REMOVED.

	BLEND LIMITS										
B.S.	1H	2H	1HV/V	2HV	1HT	2HT	1HVT	2HVT	1HC	2HC	1VC
756	0.30	0.24	0.30	0.21	0.21	0.18	0.11	0.10		0.21	
758		0.24		0.22			0.11	0.11		0.21	
760		0.24		0.22			0.12		N/A	0.21	N/A
762		0.24		0.22			0.12			0.22	
764		0.25	0.30	0.23			0.12			0.22	
766		0.25	0.20	0.20	0.21	0.18	0.13	0.11		0.22	
768		0.24	0.10	0.10					0.15	0.20	0.12
770		0.28	0.12	0.10					0.18	0.28	0.15
772		0.30	0.14	0.11					0.30	0.30	0.18
774			0.15	0.12							0.20
776			0.17	0.14							0.22
778			0.19	0.15							0.25
780			0.21	0.17							0.27
782			0.23	0.18							0.29
784			0.25	0.20		N/A					0.30
786			0.27	0.21							
788			0.29	0.23							
790				0.22							
792											
794											
796											
798			0.29								
800			0.28								
802											
804											
806	0.30	0.30	0.28	0.22					0.30	0.30	0.30

TABLE VIII (CONTINUED)

Keel Beam Structure Allowable Damage
Figure 7 (Sheet 35)

737-200 BGW
P2501-P2716,
P2801-P3499

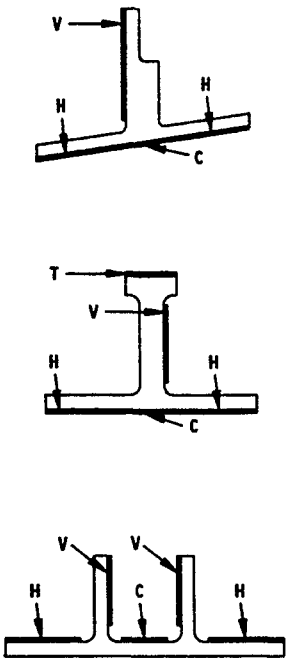

MULTIPLY THE BLEND LIMIT BY THE NOMINAL DELIVERED PRODUCTION THICKNESS TO GET THE MAXIMUM THICKNESS THAT CAN BE REMOVED.

	BLEND LIMITS									
B.S.	2VC/2V	1H2VC	2H2VC	1H1VC	2H1VC	2H2V	1H2V	2HVC	2HTC	2HVTC
756	N/A							0.21	0.18	0.10
758								0.22	0.18	0.11
760								0.22	↑	↑
762								0.22	↕	↕
764								0.23	↓	↓
766								0.20	0.18	0.11
768	0.10	0.10	0.10	0.10	0.10	0.10	0.10	N/A		
770	↑	↑	↑	0.12	0.10	↑	↑			
772	↕	↕	↕	0.14	0.11	↕	↕			
774	↓	↕	↕	0.15	0.12	↕	↕			
776	0.10	↓	↕	0.17	0.14	↕	↓			
778	0.11	0.10	↓	0.19	0.15	↓	0.10			
780	0.13	0.11	0.10	0.21	0.17	0.10	0.11			
782	0.14	0.12	0.11	0.23	0.18	0.11	0.12			
784	0.15	0.13	0.12	0.25	0.20	0.12	0.13			
786	0.16	0.14	0.12	0.27	0.21	0.12	0.14			
788	0.17	0.15	0.13	0.29	0.23	0.13	0.15			
790	↑	↑	↑	0.29	0.22	↑	↑			
792	↕	↕	↕	0.29	↑	↕	↕			
794	↕	↕	↕	0.29	↕	↕	↕			
796	↕	↕	↕	0.29	↕	↕	↕			
798	↕	↕	↕	0.29	↕	↕	↕			
800	↕	↕	↕	0.28	↕	↕	↕			
802	↕	↕	↕	0.28	↕	↕	↕			
804	↓	↓	↓	0.28	↓	↓	↓			
806	0.17	0.15	0.13	0.28	0.22	0.13	0.15			

TABLE VIII (CONTINUED)

Keel Beam Structure Allowable Damage
Figure 7 (Sheet 36)

737-200 HGW
P3501-P3514,
P3601-P4353
P4401-P4419

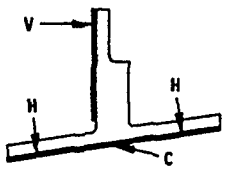

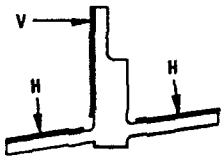

MULTIPLY THE BLEND LIMIT BY THE NOMINAL DELIVERED PRODUCTION THICKNESS TO GET THE MAXIMUM THICKNESS THAT CAN BE REMOVED.

	BLEND LIMITS			
B.S.	1H	2H/ 2HC	1HV/V	2HV/ 2HVC
500A				
500A+2				
500A+4				
500A+6				
500A+8				
500A+10				
500A+12	0.30	0.30	0.30	0.30
500A+14	↑	↑	↑	↑
500A+16				
500B				
500B+2				
500B+4				
500B+6				
500B+8				
500B+10				
500B+12				
500B+14				
500B+16				
520				
522				
524				
526				
528				
530				
532	↓	↓	↓	↓
534	0.30	0.30	0.30	0.30

	BLEND LIMITS			
B.S.	1H	2H	1HV/V	2HV
536	0.30	0.30	0.30	0.30
538	↑	↑	↑	↑
540				
542		↓	↓	↓
544		0.30	0.30	0.30
546			0.29	
548			0.27	
550			0.30	
552			↑	
554				
556				
558				
560				
562				
564				
566				
568		N/A		N/A
570				
572				
574				
576				
578				
580				
582				
584	↓		↓	
586	0.30		0.30	

NOTE: *THE 2HC AND 2HVC BLEND CONFIGURATIONS ARE ONLY APPLICABLE IN LOCATIONS BS 534 AND FORWARD*

TABLE IX

Keel Beam Structure Allowable Damage
Figure 7 (Sheet 37)

737-200 HGW
P3501-P3514,
P3601-4353
P4401-P4419

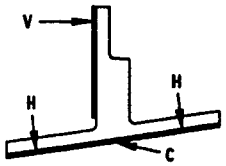

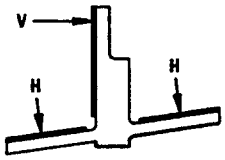

MULTIPLY THE BLEND LIMIT BY THE NOMINAL DELIVERED PRODUCTION THICKNESS TO GET THE MAXIMUM THICKNESS THAT CAN BE REMOVED.

	BLEND LIMITS			
B.S.	1H	2H	1HV/V	2HV
588	0.30		0.30	
590				
592				
594				
596				
598				
600				
602				
604				
606				
608				
610				
612				
614				
616				
618				
620		N/A		N/A
622	0.30			
624	0.29		0.30	
626	0.28		0.28	
628	0.28		0.28	
630	0.27		0.27	
632	0.25		0.25	
634	0.23		0.23	
636	0.10		0.10	
638	0.16		0.16	

	BLEND LIMITS			
B.S.	1H	2H	1HV/V	2HV
640	0.20		0.20	
642	0.21	N/A	0.21	N/A
644	0.21		0.22	
646	0.23	0.23	0.23	0.23
648	0.25	0.10	0.25	0.10
650	0.30	0.13	0.30	0.13
652		0.17	0.27	0.17
654		0.22	0.24	0.18
656		0.26	0.23	0.23
658		0.30	0.25	0.21
660		0.30	0.30	0.26
662		0.30	0.30	0.30
664		0.23	0.18	0.15
666		0.22		0.15
668		0.22		0.14
670		0.22		0.14
672		0.23		0.14
674		0.27	0.18	0.15
676		0.30	0.23	0.17
678			0.26	0.21
680			0.23	0.19
682		0.30	0.20	0.17
684		0.29	0.18	0.15
686		0.28	0.16	0.13
688		0.25	0.14	0.10
690	0.30	0.23	0.11	0.10

TABLE IX (CONTINUED)

Keel Beam Structure Allowable Damage
Figure 7 (Sheet 38)

737-200 HGW
P3501-P3514,
P3601-P4353
P4401-P4419

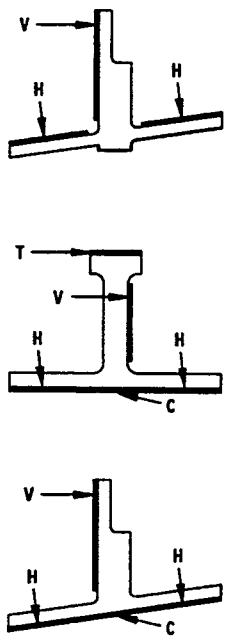

MULTIPLY THE BLEND LIMIT BY THE NOMINAL DELIVERED PRODUCTION THICKNESS TO GET THE MAXIMUM THICKNESS THAT CAN BE REMOVED.

	BLEND LIMITS							
B.S.	1H	2H	1HV/V	2HV	2HC	2HVC	2HTC	2HVTC
692	0.30	0.24	0.13	0.10	N/A	N/A	N/A	N/A
694	0.28	0.18	0.11	0.10	N/A	N/A	N/A	N/A
696	0.25	0.14	0.10	↑	N/A	N/A	N/A	N/A
698	0.21	0.12	↑	↑	N/A	N/A	N/A	N/A
700	0.17	0.10	↑	↑	N/A	N/A	N/A	N/A
702	0.13	↑	↑	↑	N/A	N/A	N/A	N/A
704	0.10	↑	↑	↑	N/A	N/A	N/A	N/A
706	↑	↑	↑	↑	N/A	N/A	N/A	N/A
708	↑	↑	↑	↑	N/A	N/A	N/A	N/A
710	↑	↑	↑	↑	N/A	N/A	N/A	N/A
712	↑	↑	↑	↑	N/A	N/A	N/A	N/A
714	↑	↑	↑	↑	N/A	N/A	N/A	N/A
716	↑	↑	↑	↑	N/A	N/A	N/A	N/A
718	↑	↑	↑	↑	N/A	N/A	N/A	N/A
720	↓	↓	↓	↓	N/A	N/A	N/A	N/A
722	0.10	↓	↓	↓	N/A	N/A	N/A	N/A
724	0.13	0.10	0.10	0.10	N/A	N/A	N/A	N/A
726	0.13	0.11	0.11	0.11	N/A	N/A	N/A	N/A
727+1	0.13	0.12	0.12	0.11	0.11	0.11	N/A	N/A
727+3	0.16	0.15	0.15	0.13	0.14	0.13	N/A	N/A
727+5	0.20	0.19	0.18	0.14	0.18	0.13	N/A	N/A
727+7	0.25	0.22	0.17	0.13	0.21	0.12	N/A	N/A
727+9	0.29	0.24	0.12	0.11	0.23	0.11	N/A	N/A
727+11	0.24	0.24	0.10	0.10	0.23	0.10	N/A	N/A
727+13	NO BLENDING IN SPLICE AREA (CONTACT BOEING) BS 727+13 TO BS 727+19							
727+15								

TABLE IX (CONTINUED)

Keel Beam Structure Allowable Damage
Figure 7 (Sheet 39)

737-200 HGW
P3501-P3514,
P3601-P4353
P4401-P4419

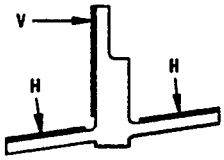

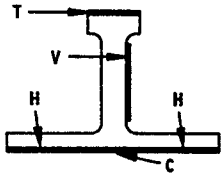

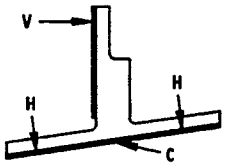

MULTIPLY THE BLEND LIMIT BY THE NOMINAL DELIVERED PRODUCTION THICKNESS TO GET THE MAXIMUM THICKNESS THAT CAN BE REMOVED.

	BLEND LIMITS											
B.S.	1H	2H	1HV/V	2HV	1HT	2HT	1HVT	2HVT	2HC	2HVC	2HTC	2HVTC
727+17	NO BLENDING IN SPLICE AREA (CONTACT BOEING) BS 727+13 TO BS 727+19											
727+19												
727A+1	0.20	0.14	0.10	0.10		N/A			0.13	0.10	0.13	0.10
727A+3	0.30	0.30	0.30	0.24	0.30	0.30	0.29	0.24	0.30	0.24	0.30	0.23
727A+5	↑	↑	↑	0.30	↑	↑	0.30	0.30	↑	0.30	↑	0.30
727A+7	↓	↓	↓	0.30	↓	↓	0.30	0.30	↓	0.30	↓	0.30
727A+9	0.30	0.30	0.30	0.30	0.30	0.30	0.30	0.30	0.30	0.30	0.30	0.30
727A+11	0.10	0.10	0.10	0.10	0.10	0.10	0.10	0.10	0.10	0.10	0.10	0.10
727A+13	0.22	0.19	0.22	0.19	0.20	0.17	0.20	0.17	0.18	0.18	0.14	0.14
727A+15	0.30	0.29	0.30	0.29	0.28	0.24	0.28	0.24	0.28	0.28	0.24	0.24
727A+17	↑	0.30	↑	0.30	0.30	0.30	0.30	0.30	0.30	0.30	0.30	0.30
727A+19		↑		↑	↑	↑	0.30	0.30	↑	↑	↑	0.30
727B+1							0.25	0.24				0.24
727B+3							0.24	↑				0.24
727B+5							0.24					↑
727B+7							0.25					
727B+9							↑					
727B+11												
727B+13												
727B+15								↓				↓
727B+17			↓	↓	↓	↓	↓	0.24	↓	↓	↓	0.24
727B+19			0.30	0.30	0.30	0.30	0.25	0.23	0.30	0.30	0.30	0.23
748			0.26	0.24	0.29	0.28	0.14	0.13	0.28	0.24	0.29	0.13
750			0.26	0.24	0.30	0.29	0.14	0.14	0.28	0.24	0.30	0.14
752	↓	↓	0.27	0.24	0.30	0.29	0.15	0.14	0.29	0.24	0.30	0.14
754	0.30	0.30	0.28	0.25	0.30	0.29	0.15	0.14	0.29	0.25	0.30	0.14

TABLE IX (CONTINUED)

Keel Beam Structure Allowable Damage
Figure 7 (Sheet 40)

H19844

737-200 HGW
P3501-P3514,
P3601-P4353
P4401-P4419

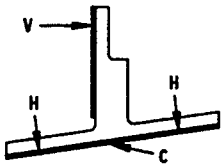

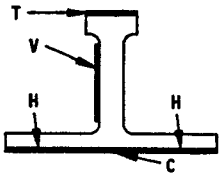

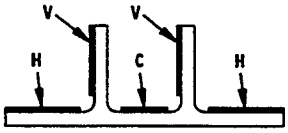

MULTIPLY THE BLEND LIMIT BY THE NOMINAL DELIVERED PRODUCTION THICKNESS TO GET THE MAXIMUM THICKNESS THAT CAN BE REMOVED.

	BLEND LIMITS										
B.S.	1H	2H	1HV/V	2HV	1HT	2HT	1HVT	2HVT	1HC	2HC	1VC
756	0.30	0.30	0.28	0.26	0.30	0.29	0.15	0.14		0.30	
758			0.30	0.27		0.29	0.16	0.15		0.29	
760				0.27		0.28			N/A	0.30	N/A
762				0.27		0.29					
764				0.30	0.28		0.28	0.16			
766			0.30	0.20	0.20	0.30	0.29	0.17	0.15	0.30	
768			0.21	0.10	0.10					0.21	0.21	0.11
770			0.24	0.10	0.10					0.21	0.24	0.14
772			0.29	0.12	0.10					0.30	0.29	0.16
774			0.30	0.14	0.11						0.30	0.18
776				0.15	0.12							0.20
778				0.17	0.14							0.22
780				0.19	0.15							0.25
782				0.21	0.17							0.27
784				0.23	0.18							0.29
786				0.25	0.19		N/A					0.30
788				0.27	0.21							0.30
790				0.28	0.22							
792				0.30	0.23							
794					0.25							
796					0.26							
798					0.27							
800					0.28							
802					0.29							
804					0.30							
806	0.30	0.30	0.30	0.30					0.30	0.30	0.30

TABLE IX (CONTINUED)

Keel Beam Structure Allowable Damage
Figure 7 (Sheet 41)

737-200 HGW
P3501-P3514,
P3601-P4353
P4401-P4419

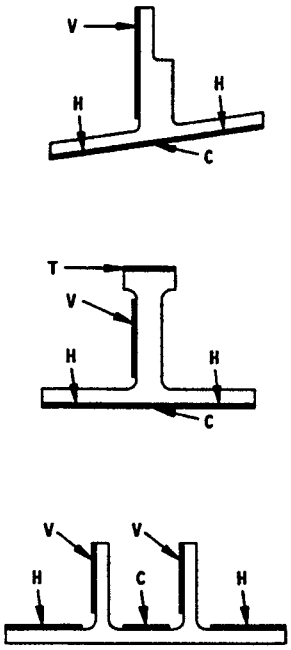

MULTIPLY THE BLEND LIMIT BY THE NOMINAL DELIVERED PRODUCTION THICKNESS TO GET THE MAXIMUM THICKNESS THAT CAN BE REMOVED.

	BLEND LIMITS									
B.S.	2VC/2V	1H2VC	2H2VC	1H1VC	2H1VC	2H2V	1H2V	2HVC	2HTC	2HVTC
756	N/A							0.26	0.29	0.14
758								0.27	0.29	0.15
760								0.27	0.28	↑
762								0.28	0.29	↕
764								0.29	0.28	↓
766								0.20	0.29	0.15
768	0.10	0.10	0.10	0.10	0.10	0.10	0.10	N/A		
770	↑	↑	↑	0.10	↕	↑	↑			
772	↕	↕	↕	0.12	0.10	↕	↕			
774	↕	↕	↕	0.14	0.11	↕	↕			
776	↓	↕	↕	0.15	0.12	↕	↕			
778	0.10	↓	↕	0.17	0.14	↕	↕			
780	0.12	0.10	↓	0.19	0.15	↓	↓			
782	0.13	0.10	0.10	0.21	0.17	0.10	0.10			
784	0.14	0.11	0.11	0.23	0.18	0.11	0.11			
786	0.15	0.12	0.12	0.25	0.19	0.12	0.12			
788	0.16	0.13	0.13	0.27	0.21	0.13	0.13			
790	0.17	0.13	0.13	0.28	0.22	0.13	0.13			
792	0.18	0.14	0.14	0.30	0.23	0.14	0.14			
794	0.19	0.15	0.15	↑	0.25	0.15	0.15			
796	0.20	0.15	0.15	↕	0.26	0.15	0.15			
798	0.21	0.16	0.16	↕	0.27	0.16	0.16			
800	0.22	0.17	0.17	↕	0.28	0.17	0.17			
802	0.23	0.17	0.17	↕	0.29	0.17	0.17			
804	0.24	0.18	0.18	↓	0.30	0.18	0.18			
806	0.25	0.19	0.19	0.30	0.30	0.19	0.19			

TABLE IX (CONTINUED)

Keel Beam Structure Allowable Damage
Figure 7 (Sheet 42)

H19884

737-200C/C HGW
P8501-P8502,
P8801-8826
P8901-8978

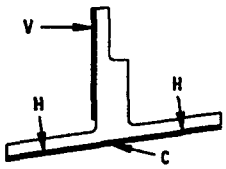

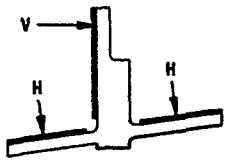

MULTIPLY THE BLEND LIMIT BY THE NOMINAL DELIVERED PRODUCTION THICKNESS TO GET THE MAXIMUM THICKNESS THAT CAN BE REMOVED.

	BLEND LIMITS			
B.S.	1H	2H/ 2HC	1HV/V	2HV/ 2HVC
500A				
500A+2				
500A+4				
500A+6				
500A+8				
500A+10				
500A+12	0.30	0.30	0.30	0.30
500A+14	↑	↑	↑	↑
500A+16				
500B				
500B+2				
500B+4				
500B+6				
500B+8				
500B+10				
500B+12				
500B+14				
500B+16				
520				
522				
524				
526				
528				
530				
532	↓	↓	↓	↓
534	0.30	0.30	0.30	0.30

	BLEND LIMITS			
B.S.	1H	2H	1HV/V	2HV
536	0.30	0.30	0.30	0.30
538	↑	↑	↑	↑
540				
542		↓		↓
544		0.30		0.30
546				
548				
550				
552				
554				
556				
558				
560				
562				
564				
566		N/A		N/A
568				
570				
572				
574				
576				
578				
580				
582				
584	↓		↓	
586	0.30		0.30	

NOTE: THE 2HC AND 2HVC BLEND CONFIGURATIONS ARE ONLY APPLICABLE IN LOCATIONS BS 534 AND FORWARD

TABLE X

Keel Beam Structure Allowable Damage
Figure 7 (Sheet 43)

737-200C/C HGW
P8501-P8502,
P8801-8826
P8901-8978

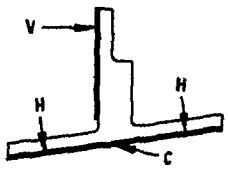

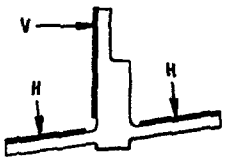

MULTIPLY THE BLEND LIMIT BY THE NOMINAL DELIVERED PRODUCTION THICKNESS TO GET THE MAXIMUM THICKNESS THAT CAN BE REMOVED.

	BLEND LIMITS			
B.S.	1H	2H	1HV/V	2HV
588	0.30		0.30	
590	↑		↑	
592				
594				
596				
598				
600				
602				
604				
606				
608				
610	↓		↓	
612	0.30		0.30	
614	0.27		0.27	
616	0.24		0.24	
618	0.27	N/A	0.27	N/A
620	0.25		0.25	
622	0.23		0.23	
624	0.21		0.21	
626	0.20		0.20	
628	0.23		0.23	
630	0.21		0.21	
632	0.19		0.19	
634	0.14		0.13	
636	0.10		0.10	
638	0.10		0.10	

	BLEND LIMITS			
B.S.	1H	2H	1HV/V	2HV
640	0.12		0.12	
642	0.13	N/A	0.13	N/A
644	0.12		0.10	
646	0.10		0.10	
648	0.20	0.20	0.20	0.20
650	0.30	0.30	0.30	0.29
652	↑	↑	↑	0.30
654				0.28
656				0.28
658				0.30
660				0.30
662				0.30
664				0.27
666				0.27
668				0.26
670				0.25
672				0.23
674				0.20
676				0.21
678			↓	0.21
680			0.30	0.23
682			0.27	0.21
684			0.25	0.20
686			0.24	0.18
688	↓	↓	0.21	0.16
690	0.30	0.30	0.19	0.14

TABLE X (CONTINUED)

Keel Beam Structure Allowable Damage
Figure 7 (Sheet 44)

H19898

737-200C/C HGW
P8501-P8502,
P8801-8826
P8901-8978

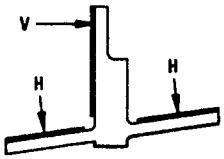

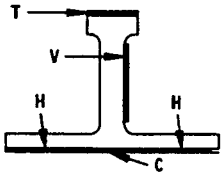

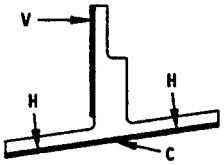

MULTIPLY THE BLEND LIMIT BY THE NOMINAL DELIVERED PRODUCTION THICKNESS TO GET THE MAXIMUM THICKNESS THAT CAN BE REMOVED.

	BLEND LIMITS							
B.S.	1H	2H	1HV/V	2HV	2HC	2HVC	2HTC	2HVTC
692	0.30	0.30	0.18	0.14				
694		0.28	0.15	0.11				
696		0.27	0.13	0.10				
698		0.25	0.12	0.11				
700		0.23	0.12	0.12				
702		0.23	0.13	0.11				
704		0.22	0.13	0.10				
706	0.30	0.20	0.12					
708	0.29	0.18	0.10					
710	0.26	0.16						
712	0.24	0.14						
714	0.24	0.13						
716	0.23	0.12				N/A		
718	0.23	0.12						
720	0.24	0.13						
722	0.26	0.14						
724	0.27	0.17						
726	0.21	0.14						
727+1	0.10	0.10	0.10	0.10	0.10	0.10		
727+3	0.16	0.15	0.16	0.14	0.15	0.13		
727+5	0.22	0.20	0.19	0.16	0.19	0.15		
727+7	0.26	0.24	0.19	0.16	0.23	0.15		
727+9	0.30	0.26	0.14	0.11	0.26	0.11		
727+11	0.20	0.20	0.13	0.10	0.20	0.10		
727+13	NO BLENDING IN SPLICE AREA (CONTACT BOEING) BS 727+13 TO BS 727+19							
727+15								

TABLE X (CONTINUED)

Keel Beam Structure Allowable Damage
Figure 7 (Sheet 45)

737-200C/C HGW
P8501-P8502,
P8801-8826
P8901-8978

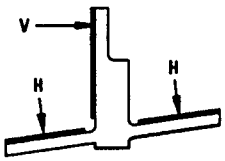

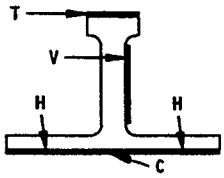

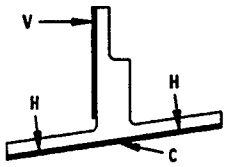

MULTIPLY THE BLEND LIMIT BY THE NOMINAL DELIVERED PRODUCTION THICKNESS TO GET THE MAXIMUM THICKNESS THAT CAN BE REMOVED.

	BLEND LIMITS											
B.S.	1H	2H	1HV/V	2HV	1HT	2HT	1HVT	2HVT	2HC	2HVC	2HTC	2HVTC
727+17	NO BLENDING IN SPLICE AREA (CONTACT BOEING) BS 727+13 TO BS 727+19											
727+19												
727A+1	0.20	0.14	0.10	0.10		N/A			0.14	0.10	0.15	0.10
727A+3	0.30	0.30	0.20	0.25	0.20	0.20	0.20	0.25	0.30	0.20	0.20	0.20
727A+5	0.30	0.30	0.30	0.30	0.30	0.30	0.30	0.30	0.30	0.30	0.30	0.30
727A+7	0.30	0.30	0.30	0.30	0.30	0.30	0.30	0.30	0.30	0.30	0.30	0.30
727A+9	0.20	0.20	0.20	0.20	0.20	0.20	0.20	0.20	0.20	0.20	0.20	0.20
727A+11	0.11	0.10	0.11	0.10	0.10	0.10	0.10	0.10	0.10	0.10	0.10	0.10
727A+13	0.20	0.17	0.20	0.17	0.16	0.13	0.16	0.14	0.16	0.16	0.13	0.13
727A+15	0.30	0.29	0.30	0.29	0.28	0.24	0.28	0.24	0.27	0.27	0.23	0.23
727A+17	↑	0.30	↑	0.30	0.30	0.30	0.30	0.30	0.30	0.30	0.30	0.30
727A+19	↑	↑	↑	↑	0.30	0.29	0.30	0.29	↑	↑	0.29	0.29
727B+1	↑	↑	↑	↑	↑	0.30	0.23	0.23	↑	↓	0.30	0.23
727B+3	↑	↑	↑	↑	↑	↑	0.22	0.21	↑	0.30	↑	0.21
727B+5	↑	↑	↑	↑	↑	↑	0.21	0.21	↑	0.29	↑	0.21
727B+7	↑	↑	↑	↓	↓	↑	0.20	0.19	↓	0.29	↑	0.19
727B+9	↑	↓	0.30	0.30	↓	↓	0.19	0.19	0.30	0.28	↓	0.19
727B+11	↑	0.30	0.29	0.29	0.30	0.30	0.18	0.17	0.29	0.27	0.30	0.17
727B+13	↑	0.29	0.27	0.27	0.28	0.28	0.16	0.16	0.27	0.25	0.27	0.16
727B+15	↑	0.28	0.25	0.25	0.26	0.26	0.14	0.14	0.24	0.24	0.24	0.14
727B+17	↑	0.24	0.22	0.22	0.24	0.24	0.12	0.12	0.20	0.21	0.20	0.12
727B+19	↑	0.19	0.18	0.18	0.19	0.19	0.10	0.10	0.16	0.17	0.16	0.10
748	↑	0.21	0.17	0.17	0.21	0.21	↑	↑	0.18	0.17	0.18	↑
750	↑	0.22	0.18	0.18	0.21	0.21	↑	↑	0.18	0.18	0.18	↑
752	↓	0.22	0.19	0.19	0.22	0.20	↓	↓	0.18	0.18	0.18	↓
754	0.30	0.23	0.19	0.19	0.22	0.20	0.10	0.10	0.19	0.19	0.19	0.10

TABLE X (CONTINUED)

Keel Beam Structure Allowable Damage
Figure 7 (Sheet 46)

H19916

737-200C/C HGW
P8501-P8502,
P8801-8826
P8901-8978

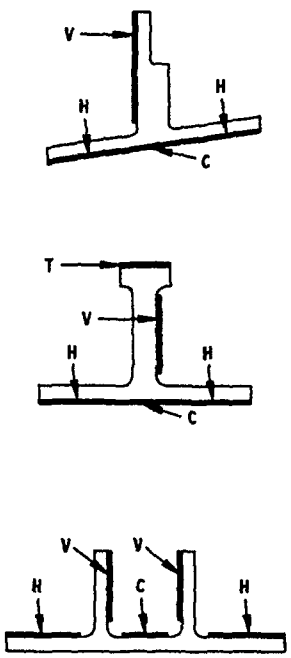

MULTIPLY THE BLEND LIMIT BY THE NOMINAL DELIVERED PRODUCTION THICKNESS TO GET THE MAXIMUM THICKNESS THAT CAN BE REMOVED.

	BLEND LIMITS										
B.S.	1H	2H	1HV/V	2HV	1HT	2HT	1HVT	2HVT	1HC	2HC	1VC
756	0.30	0.23	0.20	0.21	0.22	0.20	0.11	0.10		0.20	
758	↑	0.24	0.21	0.22	0.22	0.20	↑	0.10		0.20	
760		0.24	0.22	0.22	0.23	0.20	↓	0.10	N/A	0.21	N/A
762		0.25	0.23	0.22	↑	0.21	0.11	0.11		0.22	
764	↓	0.25	0.24	0.24	↓	0.21	0.12	0.11		0.22	
766	0.26	0.25	0.25	0.24	0.23	0.21	0.12	0.11		0.22	
768	0.10	0.10	0.10	0.10					0.10	0.10	0.10
770	0.10	0.10	↑	↑					0.10	0.10	↑
772	0.19	0.10							0.13	0.10	
774	0.27	0.11							0.19	0.11	↓
776	0.30	0.16							0.26	0.15	0.10
778	↑	0.20	↓						0.30	0.18	0.11
780		0.22	0.10						↑	0.21	0.13
782		0.27	0.11	↓						0.25	0.15
784		0.30	0.12	0.10		N/A				0.30	0.17
786		↑	0.14	0.11						↑	0.19
788			0.15	0.12							0.20
790			0.17	0.14							0.22
792			0.18	0.15							0.24
794			0.20	0.16							0.26
796			0.21	0.17							0.28
798			0.23	0.18							0.29
800			0.25	0.19							0.30
802			0.26	0.21							↑
804	↓	↓	0.28	0.22					↓	↓	↓
806	0.30	0.30	0.30	0.23					0.30	0.30	0.30

TABLE X (CONTINUED)

Keel Beam Structure Allowable Damage
Figure 7 (Sheet 47)

737-200C/C HGW
P8501-P8502,
P8801-8826
P8901-8978

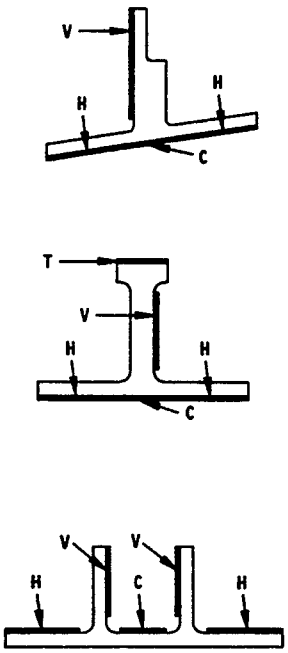

MULTIPLY THE BLEND LIMIT BY THE NOMINAL DELIVERED PRODUCTION THICKNESS TO GET THE MAXIMUM THICKNESS THAT CAN BE REMOVED.

	BLEND LIMITS									
B.S.	2VC/2V	1H2VC	2H2VC	1H1VC	2H1VC	2H2V	1H2V	2HVC	2HTC	2HVTC
756								0.20	0.20	0.10
758								0.20	0.20	0.10
760								0.21	0.20	0.10
762				N/A				0.22	0.21	0.11
764								0.23	0.21	0.11
766								0.23	0.21	0.11
768	0.10	0.10	0.10	0.10	0.10	0.10	0.10			
770										
772										
774										
776										
778										
780					0.10					
782					0.11					
784					0.12	0.10				
786					0.14	0.11			N/A	
788					0.15	0.12				
790	0.10				0.17	0.14				
792	0.11	0.10			0.18	0.15		0.10		
794	0.12	0.11			0.20	0.16		0.11		
796	0.13	0.11	0.10		0.21	0.17	0.10	0.11		
798	0.14	0.12	0.11		0.23	0.18	0.11	0.12		
800	0.15	0.13	0.11		0.25	0.19	0.11	0.13		
802	0.15	0.14	0.12		0.26	0.21	0.12	0.14		
804	0.16	0.15	0.13		0.28	0.22	0.13	0.15		
806	0.17	0.16	0.14		0.30	0.23	0.14	0.16		

TABLE X (CONTINUED)

Keel Beam Structure Allowable Damage
Figure 7 (Sheet 48)

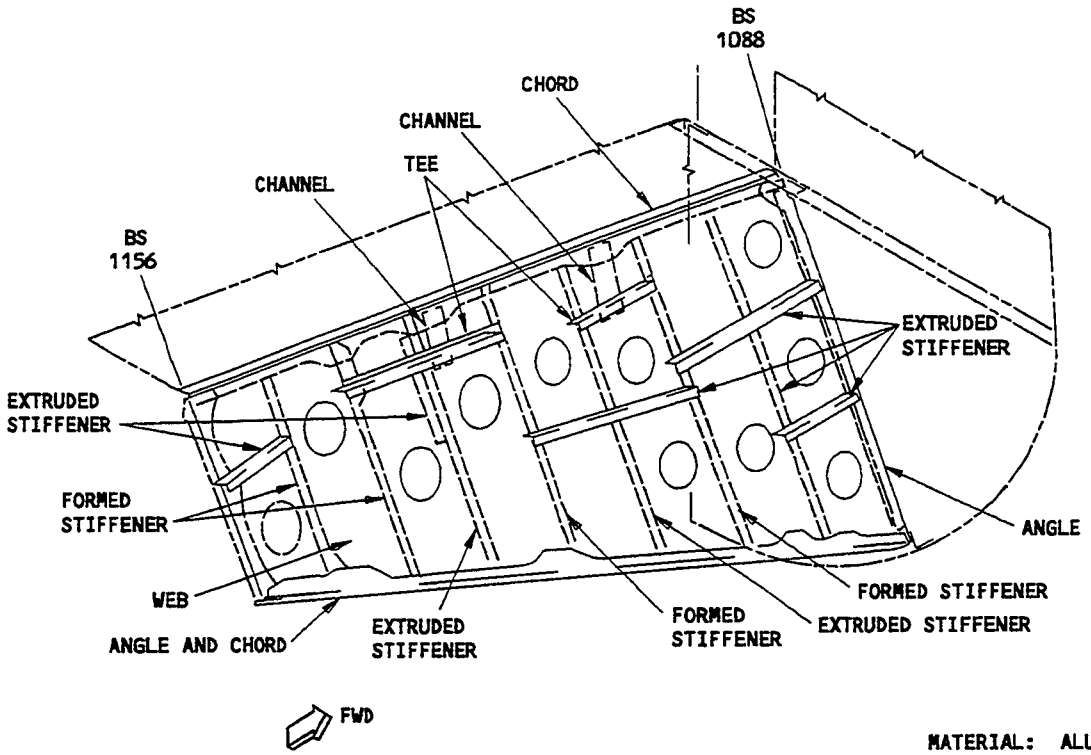

MATERIAL: ALUMINUM

TORQUE BOX - LH SIDE

DETAIL I

DESCRIPTION	CRACKS	NICKS, GOUGES, SCRATCHES AND CORROSION	DENTS	HOLES AND PUNCTURES
CHORD	NOT ALLOWED	A	NOT ALLOWED	F
ANGLE	NOT ALLOWED	A	NOT ALLOWED	E
FORMED STIFFENER	NOT ALLOWED	A	NOT ALLOWED	E
EXTRUDED STIFFENER	NOT ALLOWED	B	NOT ALLOWED	E
TEE	NOT ALLOWED	B	NOT ALLOWED	F
WEB	NOT ALLOWED	C	D	F
CHANNEL	NOT ALLOWED	B	NOT ALLOWED	G

ALLOWABLE DAMAGE FOR DETAIL I

Section 48 Torque Box Beam Allowable Damage
Figure 8 (Sheet 1)

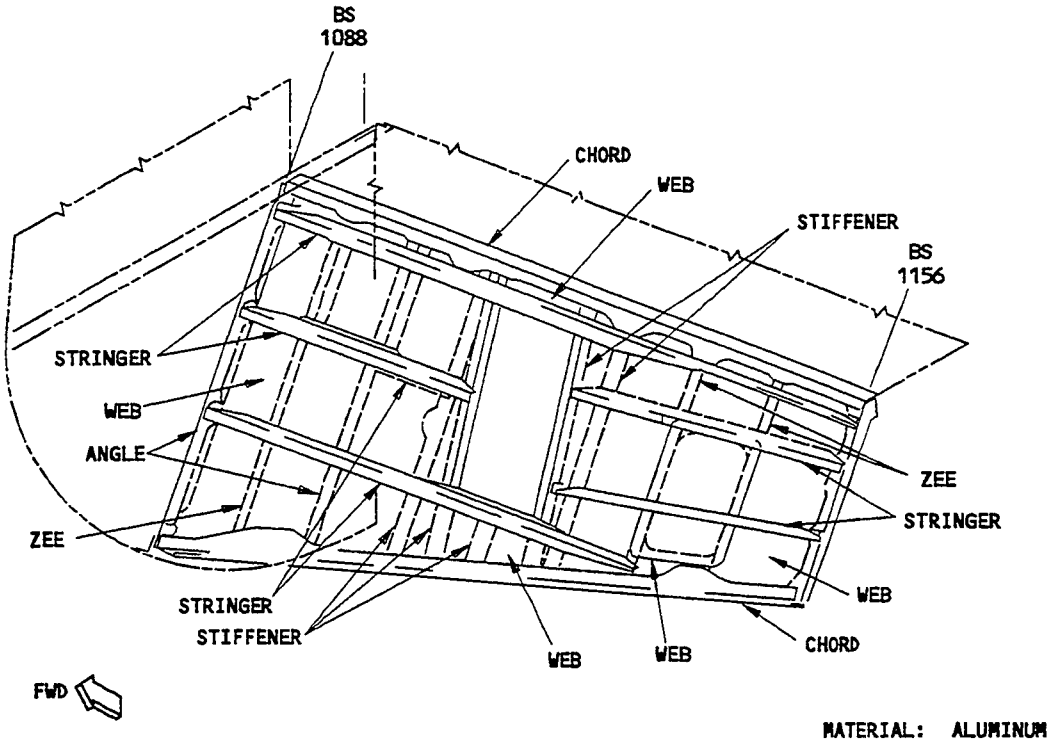

TORQUE BOX - RH SIDE

DETAIL II

DESCRIPTION	CRACKS	NICKS, GOUGES, SCRATCHES AND CORROSION	DENTS	HOLES AND PUNCTURES
CHORD	NOT ALLOWED	A	NOT ALLOWED	F
STRINGER	NOT ALLOWED	B	NOT ALLOWED	NOT ALLOWED
WEB	NOT ALLOWED	C	D	F
ZEE	NOT ALLOWED	B	NOT ALLOWED	F
STIFFENER	NOT ALLOWED	B	NOT ALLOWED	E
ANGLE	NOT ALLOWED	A	NOT ALLOWED	E

ALLOWABLE DAMAGE FOR DETAIL II

Section 48 Torque Box Beam Allowable Damage
Figure 8 (Sheet 2)

NOTES

- DAMAGE, SUCH AS BLENDOUTS, TRIMOUTS, OR DENTS:
  - THAT OCCUR TO A STRUCTURALLY SIGNIFICANT ITEM (SSI) GIVEN IN SRM 51-00-4, FIG. 3 AND,
  - THAT ARE WITHIN THE ALLOWABLE DAMAGE LIMITS OF THE BOEING SRM,

  DO NOT HAVE AN EFFECT ON THE DAMAGE TOLERANCE PROPERTIES OF THE SSI. THEREFORE, EXISTING SUPPLEMENTAL STRUCTURAL INSPECTION DOCUMENT (SSID) INSPECTION PROGRAMS REMAIN EFFECTIVE.
- REFER TO SRM 51-10-1 FOR CLASSIFICATION OF DAMAGE.
- APPLY A CHEMICAL CONVERSION COATING AND ONE LAYER OF BMS 10-11, TYPE I PRIMER TO THE REWORKED SURFACES. REFER TO SRM 51-10-2.
- NICKS, GOUGES, AND SCRATCHES THAT DO NOT GO THROUGH THE CLAD SURFACE DO NOT REQUIRE REWORK OTHER THAN TO APPLY A PROTECTIVE FINISH. REFER TO SRM 51-10-1 TO FIND THE DEPTH OF THE DAMAGE.

[A] REMOVE NICKS, GOUGES, SCRATCHES, OR CORROSION AS SHOWN IN DETAILS III, IV, VI, AND VII.

[B] REMOVE NICKS, GOUGES, SCRATCHES, OR CORROSION AS SHOWN IN DETAILS III, IV, V, VI, AND VII.

[C] REMOVE NICKS, GOUGES, SCRATCHES, OR CORROSION AS SHOWN IN DETAILS III, IV, VI, AND VIII.

[D] DENTS ARE ALLOWED AS SHOWN IN DETAIL X. THE DENTS MUST NOT GO ACROSS ANY STRUCTURE THAT IS ATTACHED. THE DENTS MUST NOT OILCAN.

[E] HOLES AND PUNCTURES ARE ALLOWED IN THE FLANGE THAT IS NOT ATTACHED AS SHOWN IN DETAIL IX.

[F] REMOVE HOLES AND PUNCTURES TO A MAXIMUM DIAMETER OF 0.25 INCH. THE EDGE OF THE DAMAGE MUST BE MORE THAN 1.00 INCH FROM A FASTENER HOLE, MATERIAL EDGE OR OTHER DAMAGE. PUT A 2117-T3 OR 2117-T4 ALUMINUM ALLOY PROTRUDING HEAD RIVET IN THE HOLE.

[G] HOLES AND PUNCTURES ARE ALLOWED IN THE FLANGE THAT IS NOT ATTACHED AS SHOWN IN DETAIL IX. REMOVE HOLES AND PUNCTURES TO A MAXIMUM DIAMETER OF 0.25 INCH. FILL THE HOLE WITH A 2117-T3 OR 2117-T4 ALUMINUM ALLOY PROTRUDING HEAD RIVET.

Section 48 Torque Box Beam Allowable Damage
Figure 8 (Sheet 3)

BOEING PROPRIETARY - Copyright © - Unpublished Work - See title page for details.

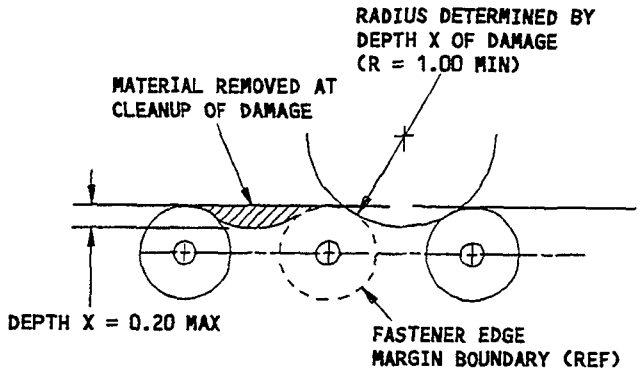

DAMAGE CLEANUP OF EDGES WHERE
FASTENER EDGE MARGINS DO NOT OVERLAP

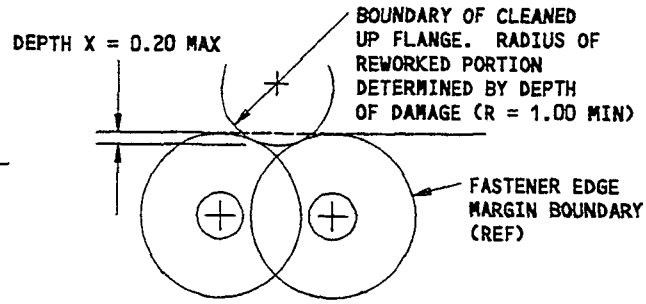

DAMAGE CLEANUP OF EDGES WHERE
FASTENER EDGE MARGINS OVERLAP

DETAIL III

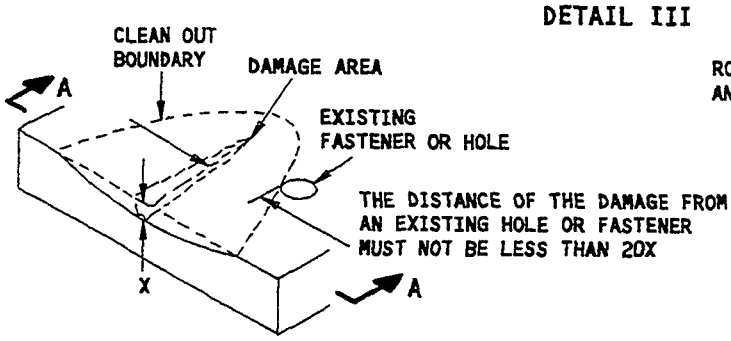

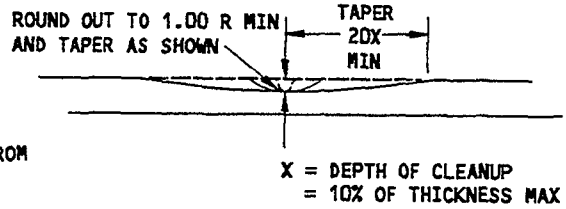

SECTION A-A

REMOVAL OF NICK, GOUGE, CORROSION AND SCRATCH DAMAGE ON A SURFACE
(DAMAGE AT EDGE SHOWN, DAMAGE AWAY FROM EDGE SIMILAR)
DETAIL IV

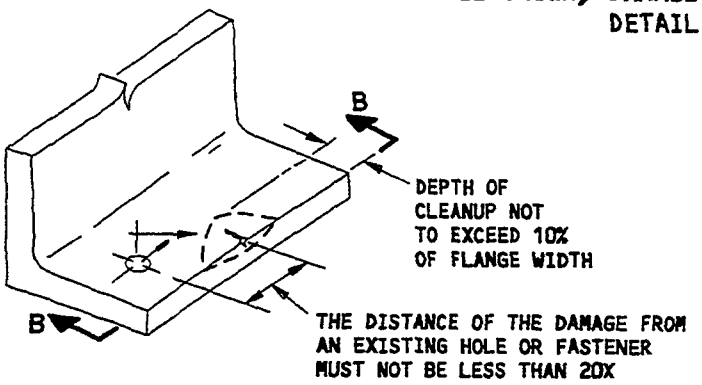

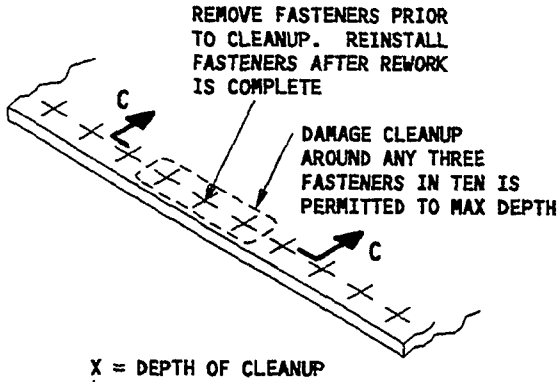

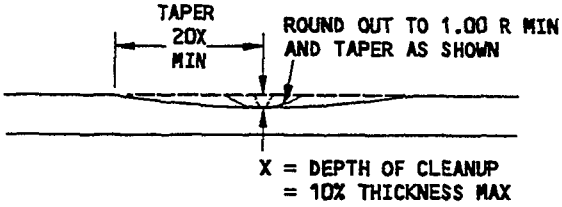

SECTION B-B

REMOVAL OF DAMAGE ON AN EDGE
DETAIL V

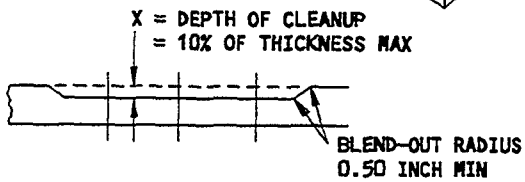

SECTION C-C

DAMAGE CLEANUP
DETAIL VI

Section 48 Torque Box Beam Allowable Damage
Figure 8 (Sheet 4)

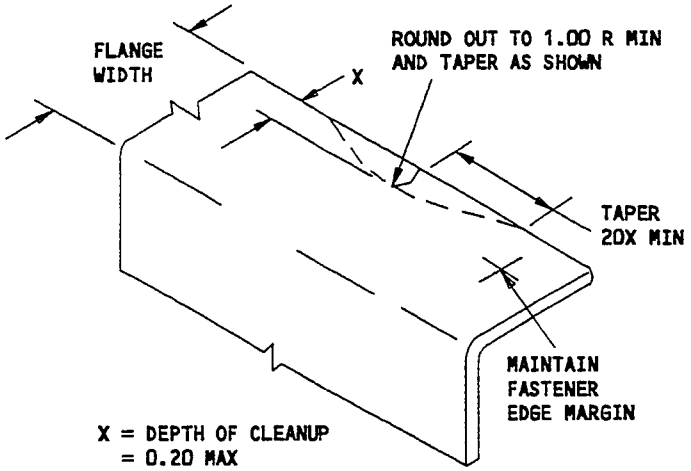

REMOVAL OF DAMAGE ON AN EDGE
DETAIL VII

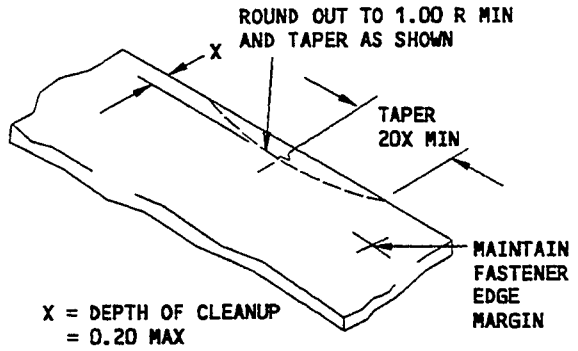

REMOVAL OF DAMAGE ON AN EDGE
DETAIL VIII

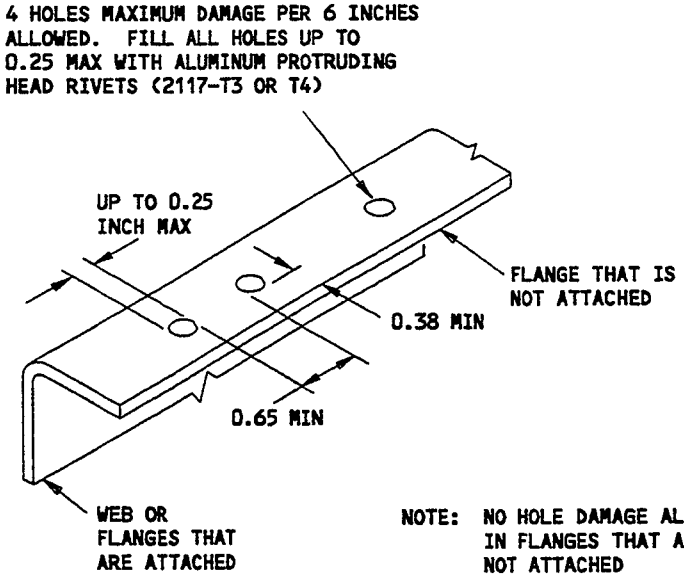

NOTE: NO HOLE DAMAGE ALLOWED IN FLANGES THAT ARE NOT ATTACHED

ALLOWABLE DAMAGE LIMITS FOR
HOLES IN FLANGE THAT IS
NOT ATTACHED
DETAIL IX

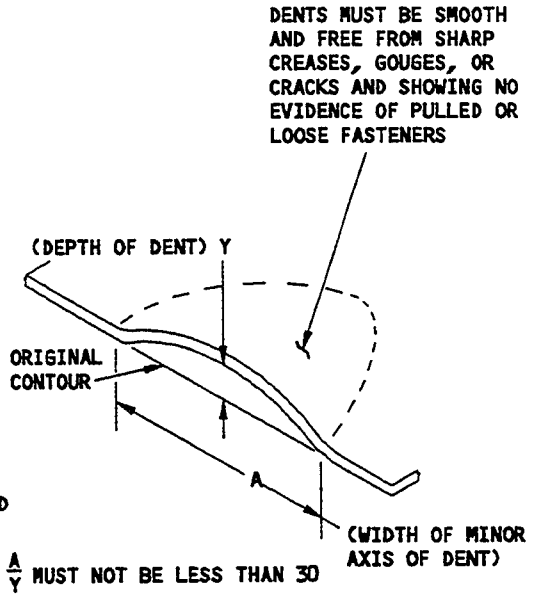

$\frac{A}{Y}$ MUST NOT BE LESS THAN 30
Y = 0.125 MAX

ALLOWABLE DAMAGE FOR DENT
(DENT AT EDGE SHOWN,
DENT AWAY FROM EDGE SIMILAR)
DETAIL X

Section 48 Torque Box Beam Allowable Damage
Figure 8 (Sheet 5)

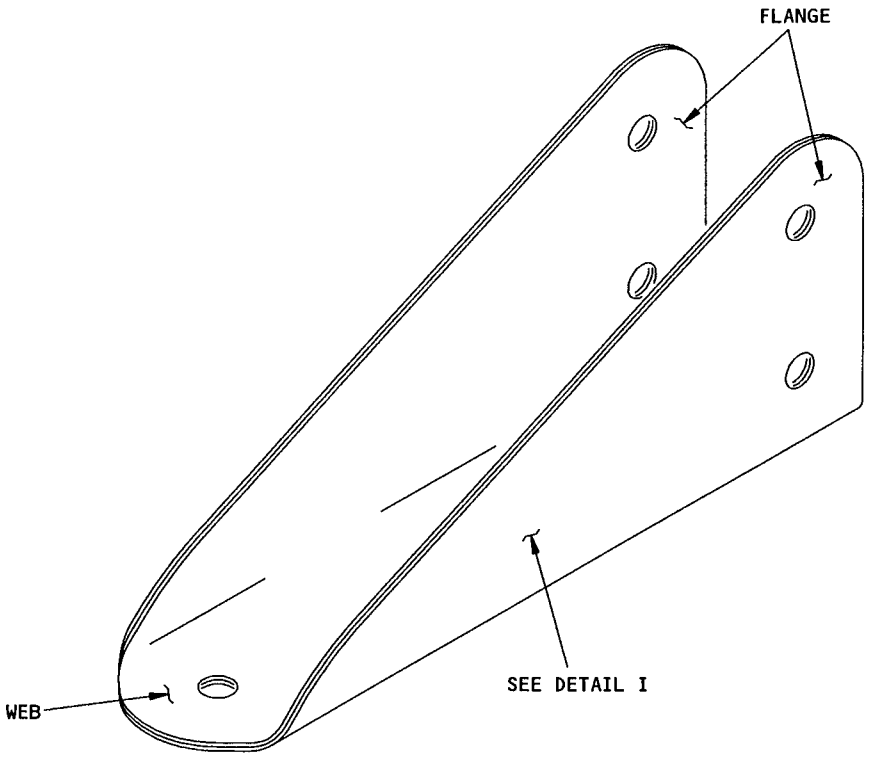

MATERIAL: TWO-PLY 7075-6 BARE ALUMINUM

TYPICAL STRINGER TIE

DESCRIPTION	CRACKS	NICKS, GOUGES AND CORROSION	DENTS	DELAMINATION
FLANGE	NOT PERMITTED	A	NOT PERMITTED	A
WEB	NOT PERMITTED	NOT PERMITTED	NOT PERMITTED	NOT PERMITTED

Allowable Damage - Laminated Stringer Ties
Figure 9 (Sheet 1)

NOTES

- THE ALLOWABLE DAMAGE LIMITS GIVEN IN THIS FIGURE COULD HAVE AN EFFECT ON A STRUCTURALLY SIGNIFICANT ITEM (SSI) GIVEN IN SRM 51-00-4, FIG. 3. BUT, NO CHANGE TO THE SUPPLEMENTAL STRUCTURAL INSPECTION DOCUMENT (SSID) INSPECTION PROGRAM IS NECESSARY.
- ALL DIMENSIONS ARE IN INCHES, UNLESS GIVEN DIFFERENTLY.
- REFER TO SRM 51-10-1 FOR DAMAGE CLASSIFICATION.
- REFER TO SOPM 20-41-02 FOR APPLICATION OF FINISHES.
- REFER TO SRM 51-10-2 FOR PROTECTIVE TREATMENT OF METALLIC AND GRAPHITE MATERIALS.

[A] REMOVE THE DAMAGE AS SHOWN IN DETAIL I. REMOVE THE MINIMUM QUANTITY OF MATERIAL NECESSARY TO REMOVE THE DAMAGE.

EXAMINE THE AREA OF CLEANUP FOR REMAINING DAMAGE OR CORROSION. DO A CLOSE VISUAL INSPECTION TO MAKE SURE THE DAMAGE IS REMOVED FROM THE SURFACE OR FROM THE EDGE.

APPLY A CHEMICAL CONVERSION COATING TO THE REWORKED AREA. REFER TO SRM 51-10-2.

APPLY ONE LAYER OF BMS 10-11, TYPE I PRIMER TO THE REWORKED AREA. REFER TO SOPM 20-41-02.

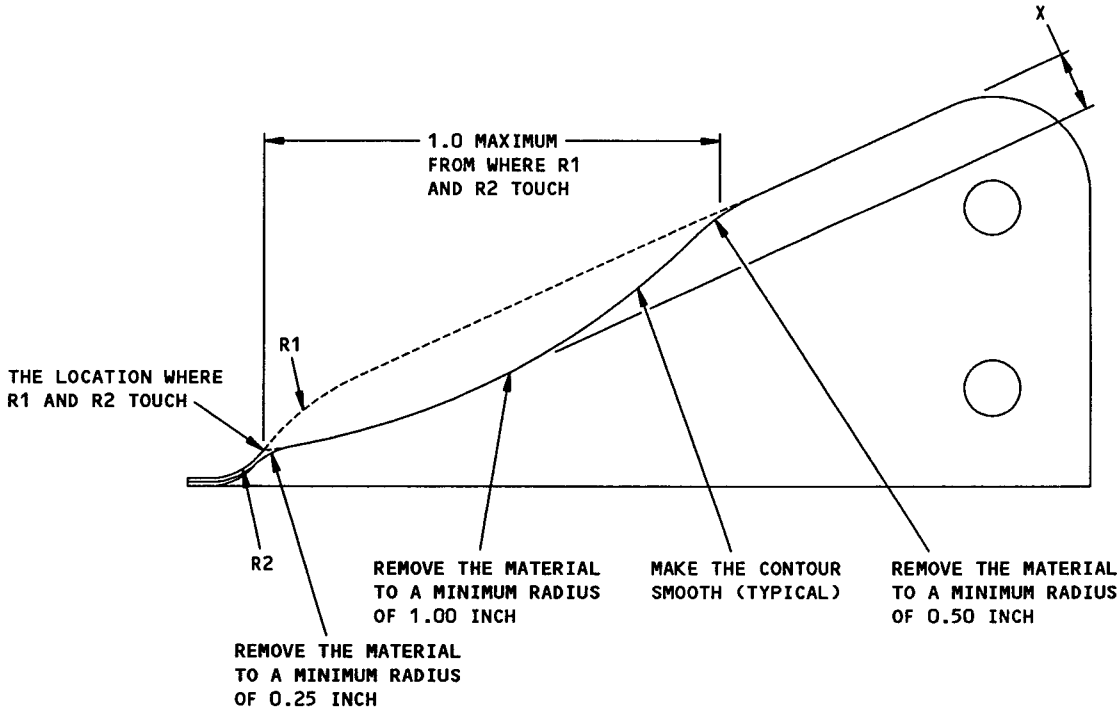

X = THE MAXIMUM DEPTH OF THE MATERIAL THAT CAN BE REMOVED
= 0.10

DETAIL I

Allowable Damage - Laminated Stringer Ties
Figure 9 (Sheet 2)

BOEING PROPRIETARY - Copyright © - Unpublished Work - See title page for details.

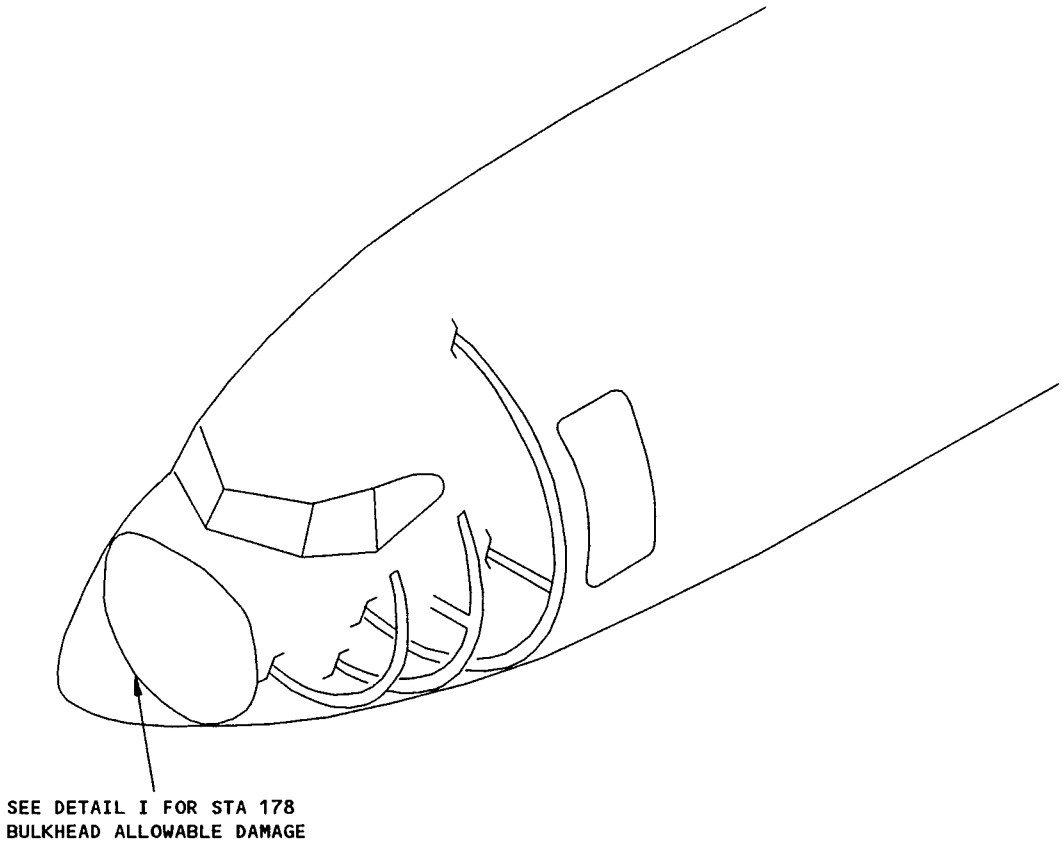

BS 178 Bulkhead Allowable Damage
Figure 10 (Sheet 1)

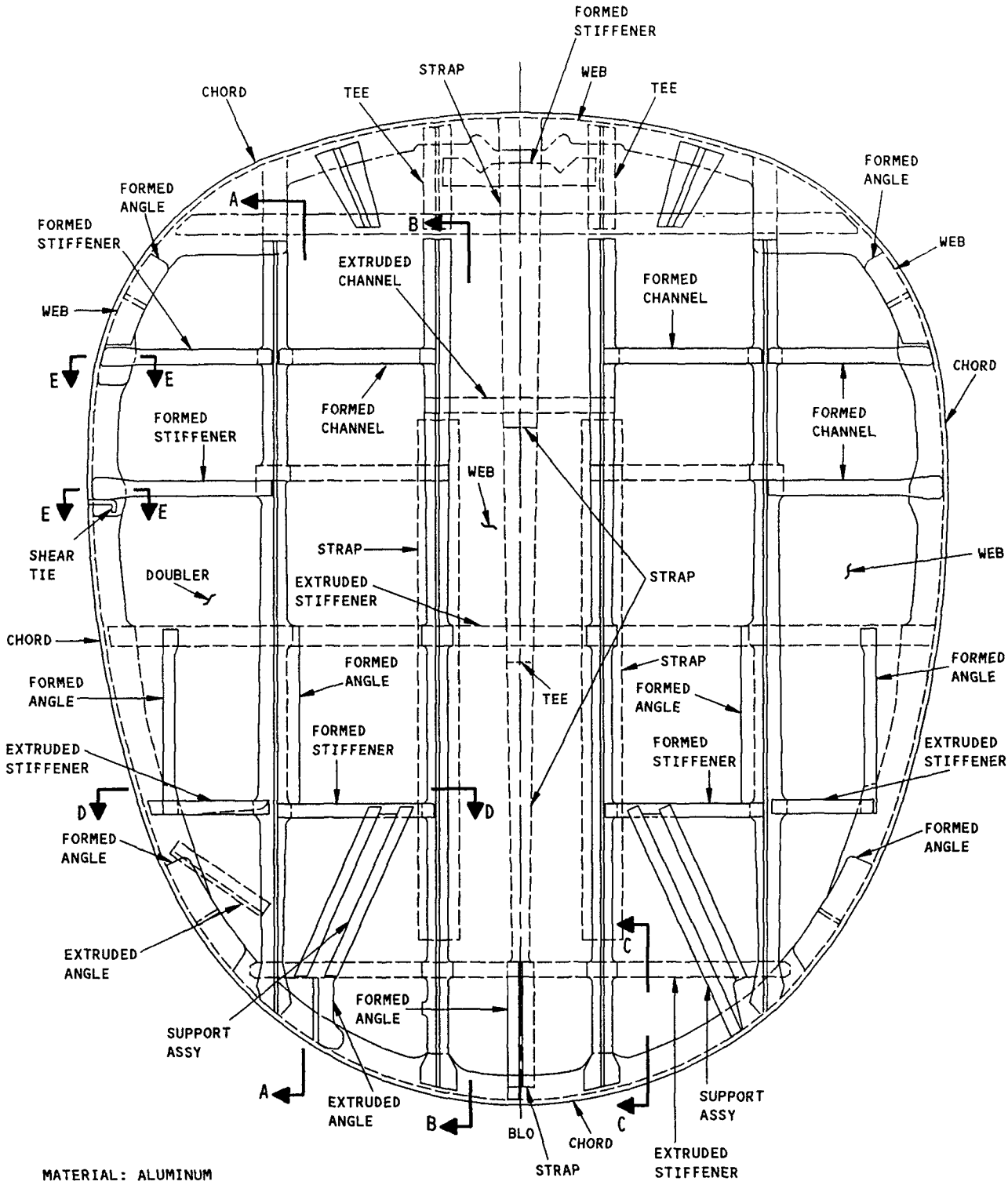

BODY STA 178 BULKHEAD (REAR VIEW)
DETAIL I
BS 178 Bulkhead Allowable Damage
Figure 10 (Sheet 2)

DESCRIPTION	CRACKS	NICKS, GOUGES, SCRATCHES AND CORROSION	DENTS	HOLES AND PUNCTURES
CHORD	NOT ALLOWED	A	NOT ALLOWED	E
FORMED ANGLE	NOT ALLOWED	A	NOT ALLOWED	E
EXTRUDED ANGLE	NOT ALLOWED	B	NOT ALLOWED	F
WEB	NOT ALLOWED	C	D	F
DOUBLER	NOT ALLOWED	C	D	F
SUPPORT ASSY	NOT ALLOWED	C	NOT ALLOWED	G
FORMED STIFFENER	NOT ALLOWED	C	NOT ALLOWED	E
EXTRUDED STIFFENER	NOT ALLOWED	B	NOT ALLOWED	E
STRAP	NOT ALLOWED	C	NOT ALLOWED	F
TEE	NOT ALLOWED	B	NOT ALLOWED	F
SHEAR TIE	NOT ALLOWED	C	NOT ALLOWED	F
FORMED CHANNEL	NOT ALLOWED	C	NOT ALLOWED	F
EXTRUDED CHANNEL	NOT ALLOWED	B	NOT ALLOWED	F

ALLOWABLE DAMAGE FOR DETAIL I

BS 178 Bulkhead Allowable Damage
Figure 10 (Sheet 3)

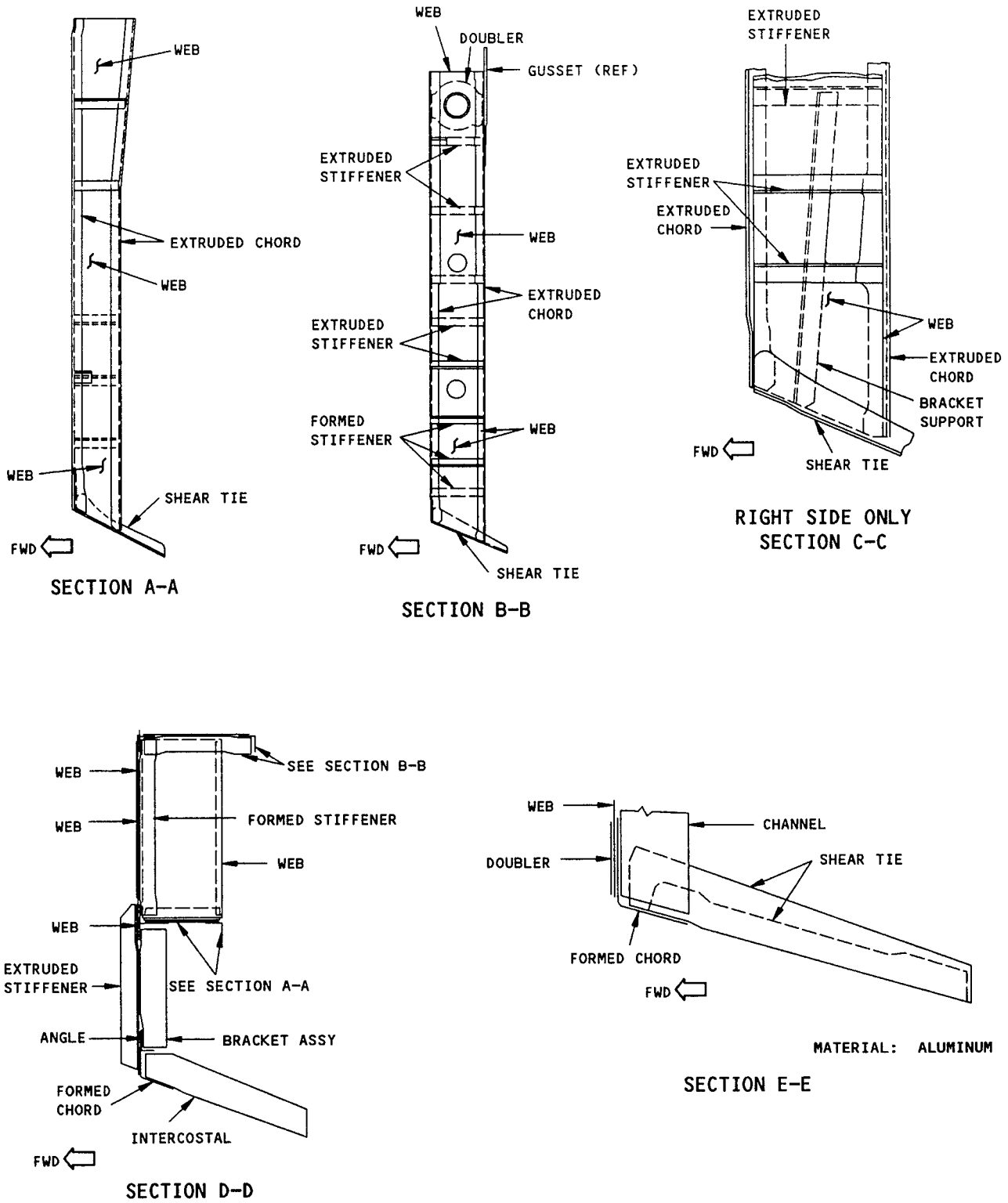

BS 178 Bulkhead Allowable Damage
Figure 10 (Sheet 4)

DESCRIPTION	CRACKS	NICKS, GOUGES, SCRATCHES AND CORROSION	DENTS	HOLES AND PUNCTURES
FORMED CHORD	NOT ALLOWED	A	NOT ALLOWED	E
EXTRUDED CHORD	NOT ALLOWED	B	NOT ALLOWED	F
WEB	NOT ALLOWED	C	D	F
SHEAR TIE	NOT ALLOWED	C	NOT ALLOWED	F
FORMED STIFFENER	NOT ALLOWED	A	NOT ALLOWED	E
EXTRUDED STIFFENER	NOT ALLOWED	B	NOT ALLOWED	E
DOUBLER	NOT ALLOWED	C	D	F
INTERCOSTAL	H	C	NOT ALLOWED	G
BRACKET ASSY	NOT ALLOWED	C	NOT ALLOWED	E
BRACKET SUPPORT	NOT ALLOWED	B	NOT ALLOWED	F
CHANNEL	NOT ALLOWED	B	NOT ALLOWED	F
ANGLE	NOT ALLOWED	A	NOT ALLOWED	E

ALLOWABLE DAMAGE FOR SECTIONS A-A,B-B,C-C,D-D,E-E

BS 178 Bulkhead Allowable Damage
Figure 10 (Sheet 5)

NOTES

- FOR INVESTIGATION AND CLEANUP OF DAMAGE, REFER TO SRM 51-10-1.
- FOR REWORKED ALUMINUM SURFACES, APPLY A CHEMICAL CONVERSION COATING. REFER TO SRM 51-10-2.
- REFINISH REWORKED AREAS AS GIVEN IN 51-21 OF THE MAINTENANCE MANUAL.
- NICKS, GOUGES, AND SCRATCHES THAT DO NOT PENETRATE ALL THE WAY THROUGH CLAD SURFACES MAY BE IGNORED. INSPECT PENETRATION DEPTH AS GIVEN IN SRM 51-10-1.

A REMOVE NICKS, GOUGES, SCRATCHES, OR CORROSION AS GIVEN IN DETAILS II, III, V, AND VI.

B REMOVE NICKS, GOUGES, SCRATCHES, OR CORROSION AS GIVEN IN DETAILS II, III, IV, V, AND VI.

C REMOVE NICKS, GOUGES, SCRATCHES, OR CORROSION AS GIVEN IN DETAILS II, III, V, AND VII.

D DENTS ARE PERMITTED AS GIVEN IN DETAIL IX. DENTS MUST NOT EXTEND ACROSS ANY ATTACHED STRUCTURE. DENTS MUST NOT SHOW EVIDENCE OF "OILCANNING".

E HOLES AND PUNCTURES ARE PERMITTED ONLY IN THE FREE FLANGE AS GIVEN IN DETAIL VIII.

F HOLES AND PUNCTURES ARE PERMITTED UP TO 0.25 MAXIMUM DIAMETER AFTER CLEANUP IF DAMAGE IS 1.00 MINIMUM FROM ANY OTHER HOLE, PART EDGE, EDGE OF CHEM MILLED POCKET OR OTHER DAMAGE. CLEAN UP DAMAGE AND FILL WITH A 2117-T3 OR 2117-T4 ALUMINUM PROTRUDING HEAD RIVET.

G HOLES AND PUNCTURES ARE PERMITTED IN FREE FLANGE AS GIVEN IN DETAIL VIII. HOLES AND PUNCTURES ARE PERMITTED IN WEB UP TO 0.25 MAXIMUM DIAMETER AFTER CLEANUP IF DAMAGE IS 1.0 INCH MINIMUM FROM ANY OTHER HOLE, PART EDGE, OR OTHER DAMAGE. CLEAN UP DAMAGE AND FILL WITH A 2117-T3 OR 2117-T4 ALUMINUM PROTRUDING HEAD RIVET.

H REMOVE CRACKS FROM THE WL 195 INTERCOSTAL AS SHOWN IN DETAIL X AND SECTIONS I-I AND J-J. KEEP THE MACHINE SURFACE FINISH OF 125 MICROINCHES Ra OR LESS.

I THE WL 195 INTERCOSTAL WAS INITIALLY ATTACHED TO THE FLOOR BEAM LOWER CHORD ON SOME AIRPLANES.

J IF THE DAMAGE EXTENDS INTO THE OUTBOARD FLANGE, REMOVE THE DAMAGED AREA OF THE OUTBOARD FLANGE ALSO.

K FILL THE TOOLING HOLE WITH A 0.25 DIAMETER 2117-T3 OR -T4 ALUMINUM PROTRUDING HEAD RIVET. KEEP A MINIMUM OF 1.5D EDGE MARGIN.

L REPLACE THE INITIAL FASTENER THROUGH THE FLOOR BEAM LOWER CHORD WITH A FASTENER THAT IS THE SAME TYPE AND DIAMETER AS THE INITIAL FASTENER (2 LOCATIONS).

BS 178 Bulkhead Allowable Damage
Figure 10 (Sheet 6)

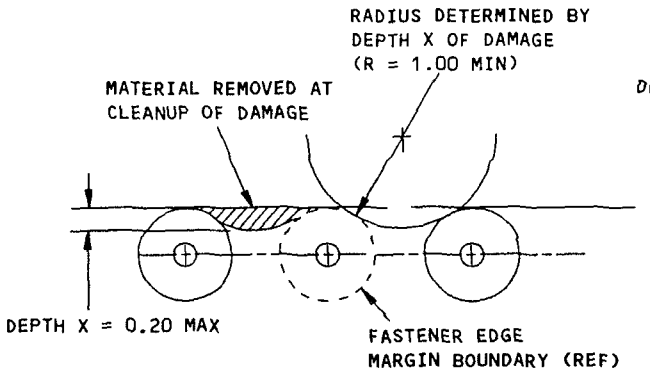

DAMAGE CLEANUP OF EDGES WHERE
FASTENER EDGE MARGINS DO NOT OVERLAP

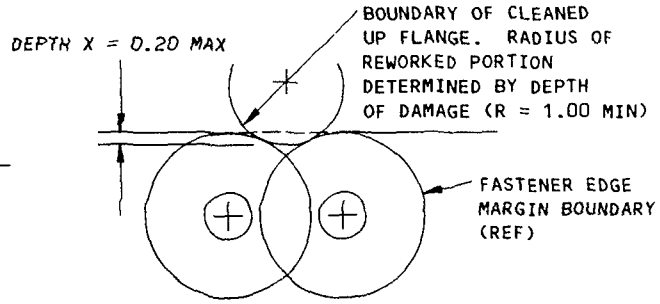

DAMAGE CLEANUP OF EDGES WHERE
FASTENER EDGE MARGINS OVERLAP

DETAIL II

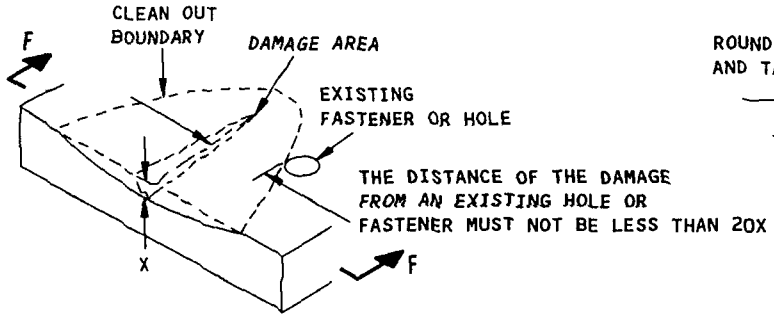

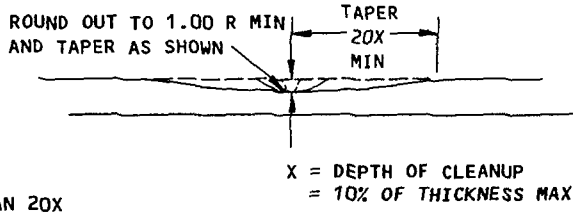

SECTION F-F

REMOVAL OF NICK, GOUGE, CORROSION AND SCRATCH DAMAGE ON A SURFACE
(DAMAGE AT EDGE SHOWN, DAMAGE AWAY FROM EDGE SIMILAR)
DETAIL III

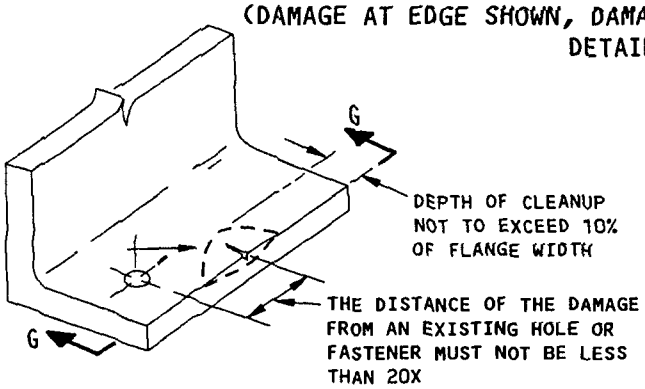

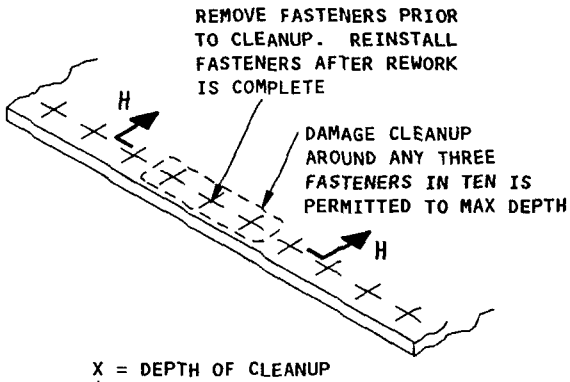

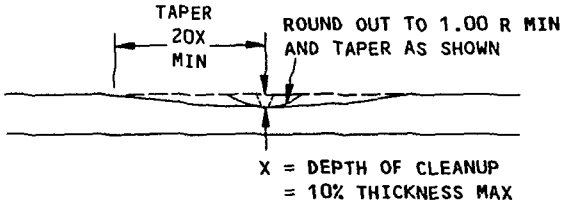

SECTION G-G
REMOVAL OF DAMAGE ON AN EDGE
DETAIL IV

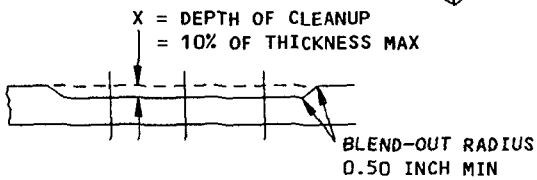

SECTION H-H
DAMAGE CLEANUP
DETAIL V

BS 178 Bulkhead Allowable Damage
Figure 10 (Sheet 7)

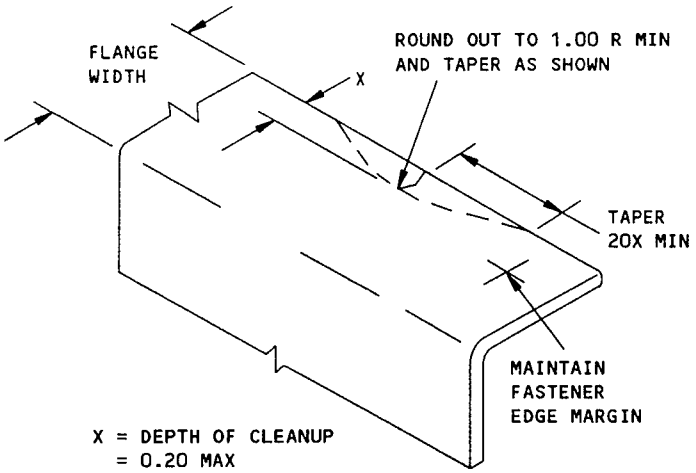

REMOVAL OF DAMAGE ON AN EDGE
DETAIL VI

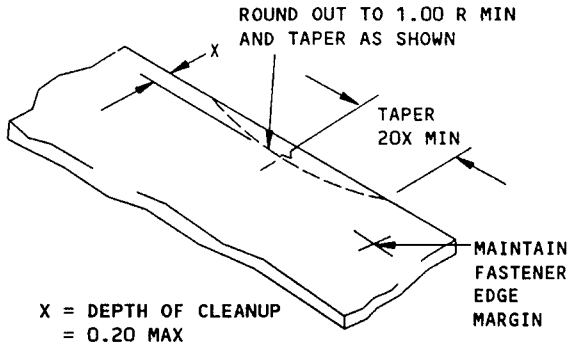

REMOVAL OF DAMAGE ON AN EDGE
DETAIL VII

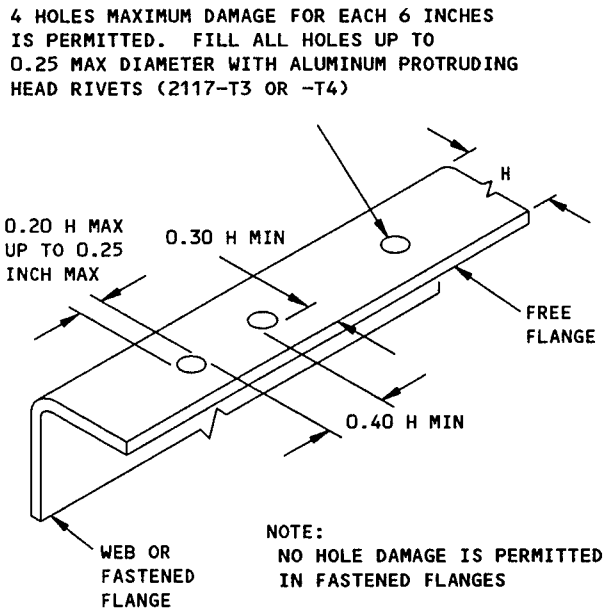

ALLOWABLE DAMAGE LIMITS FOR
HOLES IN FREE FLANGE
DETAIL VIII

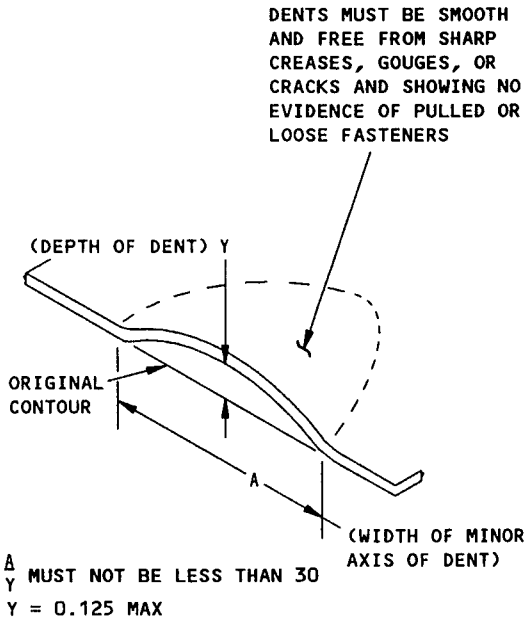

ALLOWABLE DAMAGE FOR DENT
(DENT AT EDGE SHOWN,
DENT AWAY FROM EDGE SIMILAR)
DETAIL IX

BS 178 Bulkhead Allowable Damage
Figure 10 (Sheet 8)

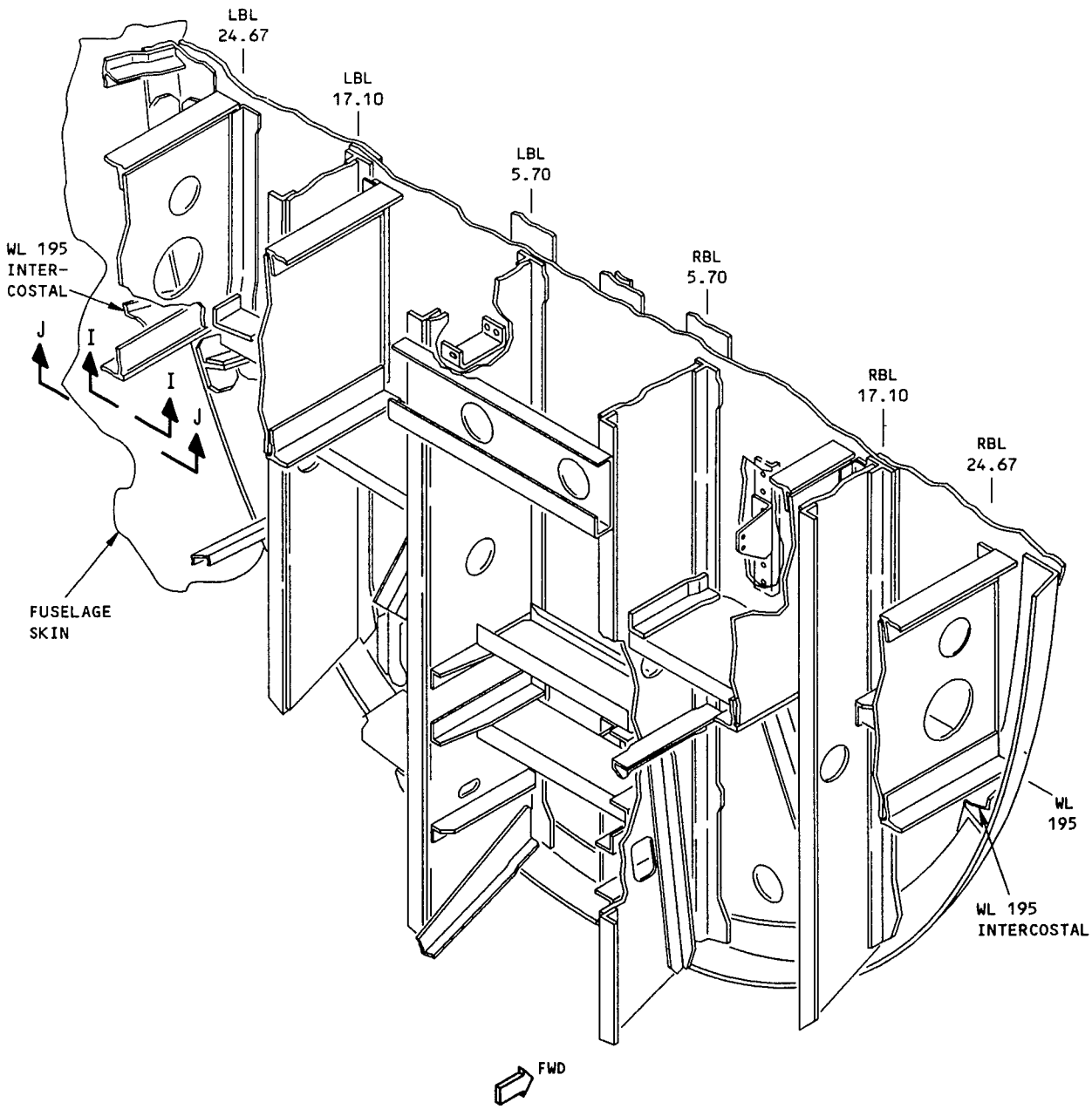

BODY STATION 178 BULKHEAD BELOW WL 207

REAR VIEW

DETAIL X

BS 178 Bulkhead Allowable Damage
Figure 10 (Sheet 9)

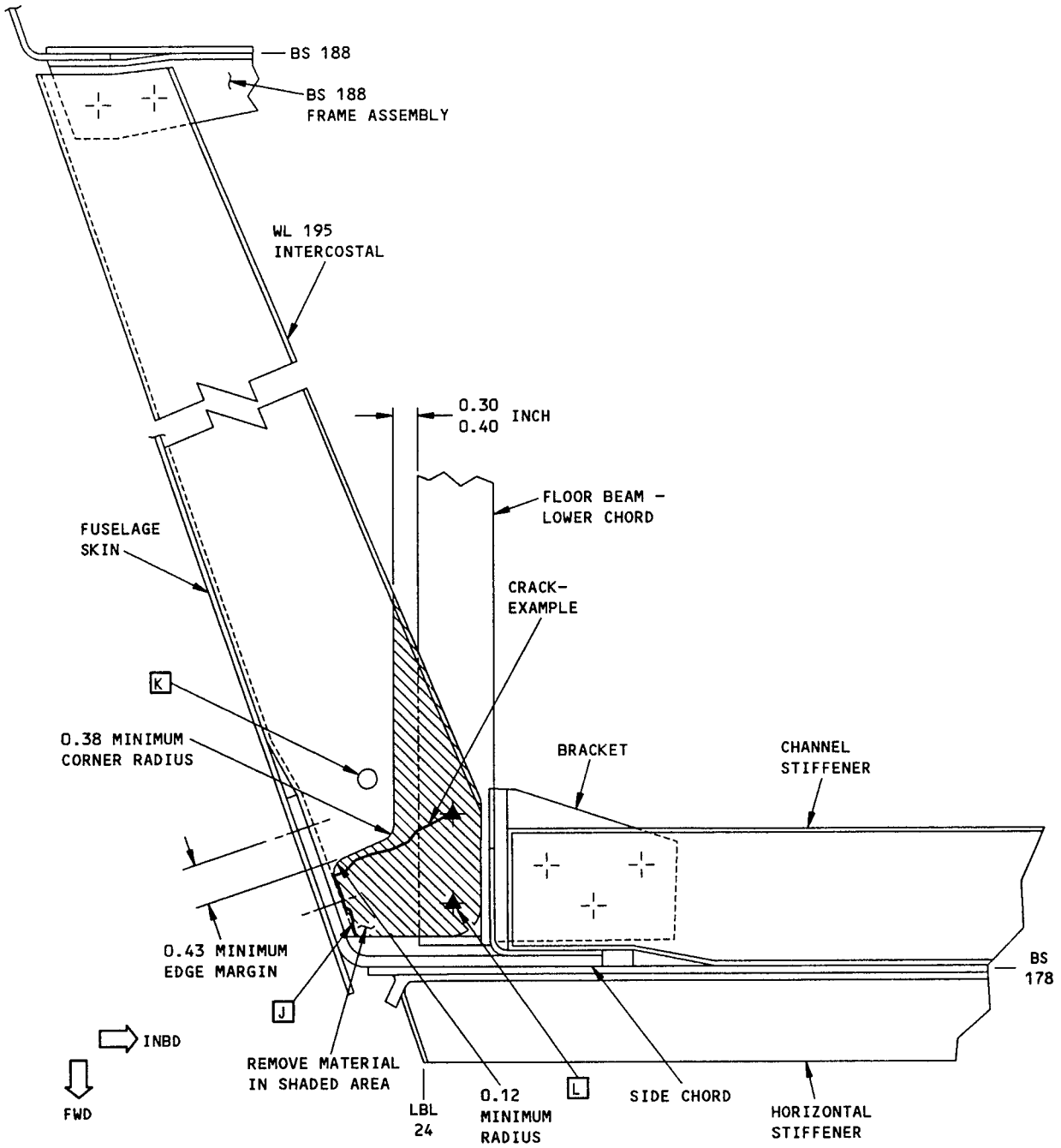

WL 195 INTERCOSTAL (WITH A LARGE CRACK) INITIALLY ATTACHED TO FLOOR BEAM I

LEFT SIDE IS SHOWN, RIGHT SIDE IS OPPOSITE

SECTION I-I

BS 178 Bulkhead Allowable Damage
Figure 10 (Sheet 10)

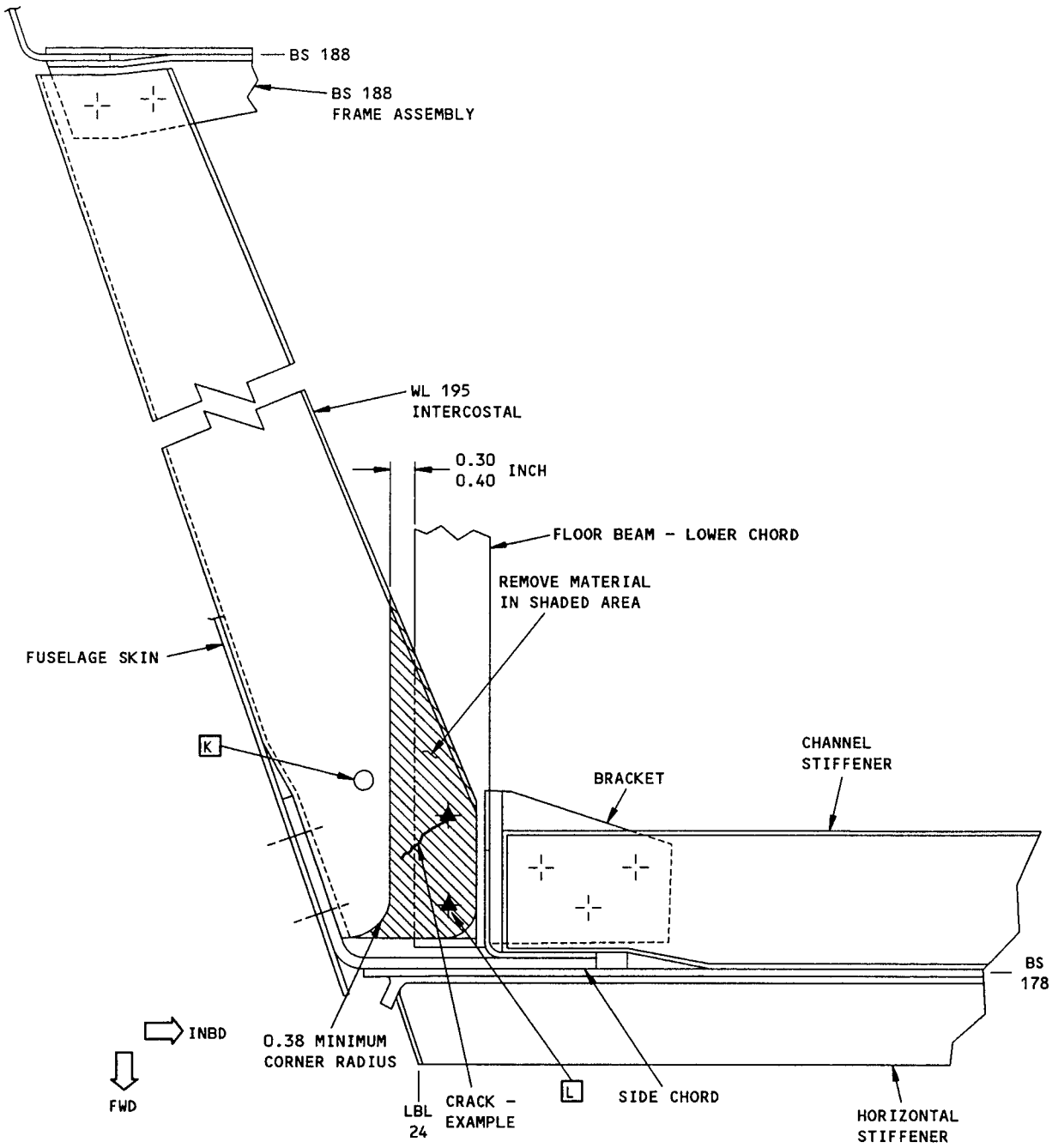

WL 195 INTERCOSTAL (WITH A SMALL CRACK) INITIALLY ATTACHED TO FLOOR BEAM I

LEFT SIDE SHOWN, RIGHT SIDE OPPOSITE

SECTION J-J

BS 178 Bulkhead Allowable Damage
Figure 10 (Sheet 11)

DESCRIPTION	CRACKS	NICKS, GOUGES, SCRATCHES AND CORROSION	DENTS	HOLES AND PUNCTURES
ALUMINUM FLOOR PANEL [F]	[A]	[B]	[C]	[E]

NOTES

- REFER TO SRM 51-10-01 FOR INVESTIGATION AND CLEANUP OF DAMAGE.
- REFINISH REWORKED AREAS AS GIVEN IN SOPM 20-41-02.
- THE ALLOWABLE DAMAGE CRITERIA STATED HEREIN APPLIES TO STRUCTURAL INTEGRITY ONLY AND SHOULD NOT BE USED WHERE FLOOR PANEL FUNCTIONAL UTILITY WOULD BE IMPAIRED.

[A] 2.00 INCH MAXIMUM LENGTH CRACK PERMITTED. CRACKS MUST BE 1.00 INCH MINIMUM FROM FASTENER HOLES AND ANOTHER DAMAGE. STOP DRILL THE END OF CRACKS WITH 0.25 INCH DIAMETER HOLE. REMOVE EDGE DAMAGE AS SHOWN IN DETAIL I. [D]

[B] REMOVE DAMAGE AS SHOWN IN DETAILS I AND II. IF THE DEPTH OF CLEANUP "X" IS BETWEEN 15 PERCENT AND 50 PERCENT, REPAIR THE DAMAGE BY THE NEXT "C" CHECK OR 6000 FLIGHT CYCLES, WHICHEVER IS FIRST.

[C] DENTS ARE PERMITTED AS SHOWN IN DETAIL III. DENTS THAT ARE LESS THAN 1.0 INCH FROM A HOLE, MATERIAL EDGE, RADIUS OR OTHER DAMAGE ARE NOT PERMITTED. DENTS THAT ARE MORE THAN 0.25 INCH DEEP ARE NOT PERMITTED. REPAIR DENTS AS GIVEN IN SRM 51-40-1. IF A DENT IS MORE THAN 0.25 INCH DEEP BUT DOES NOT GO TO THE EDGE OF THE FLOOR PANEL, YOU MUST REPAIR THE DENT BY THE NEXT "C" CHECK OR 6,000 FLIGHT CYCLES, WHICHEVER IS FIRST.

[D] APPLY ALUMINUM FOIL TAPE (SPEED TAPE) 3M-Y436 OR EQUIVALENT OVER THE DAMAGE AREA. RECORD THE LOCATION AND INSPECT THE TAPE EVERY 250 FLIGHT CYCLES. REPLACE THE ALUMINUM FOIL TAPE IF YOU SEE ANY PEELING OR DETERIORATION OF THE TAPE. REPAIR DAMAGE IF IT IS MORE THAN THE ALLOWABLE DAMAGE LIMITS OR IF THERE IS NEW CRACK GROWTH.

[E] HOLES AND PUNCTURES ARE PERMITTED UP TO 0.25 INCH MAXIMUM DIAMETER AFTER CLEANUP. THE DAMAGE MUST BE 1.00 INCH MINIMUM FROM ANY OTHER HOLE OR MATERIAL EDGE, RADIUS, OR DAMAGE. FILL THE HOLE WITH A 2117-T3 OR T4 ALUMINUM RIVET. HOLES AND PUNCTURES UP TO 1.00 INCH IN DIAMETER CAN BE REPAIRED WITH SPEED TAPE AS GIVEN IN FLAGNOTE [D]. ALL OTHER HOLES ARE TO BE REPAIRED AS GIVEN IN SRM 51-40-2.

[F] DO NOT USE THIS ALLOWABLE DAMAGE FOR NON-ALUMINUM FLOOR PANELS.

Section 43 and 46 Cargo Floor Panel Allowable Damage
Figure 11 (Sheet 1)

BOEING PROPRIETARY - Copyright © - Unpublished Work - See title page for details.

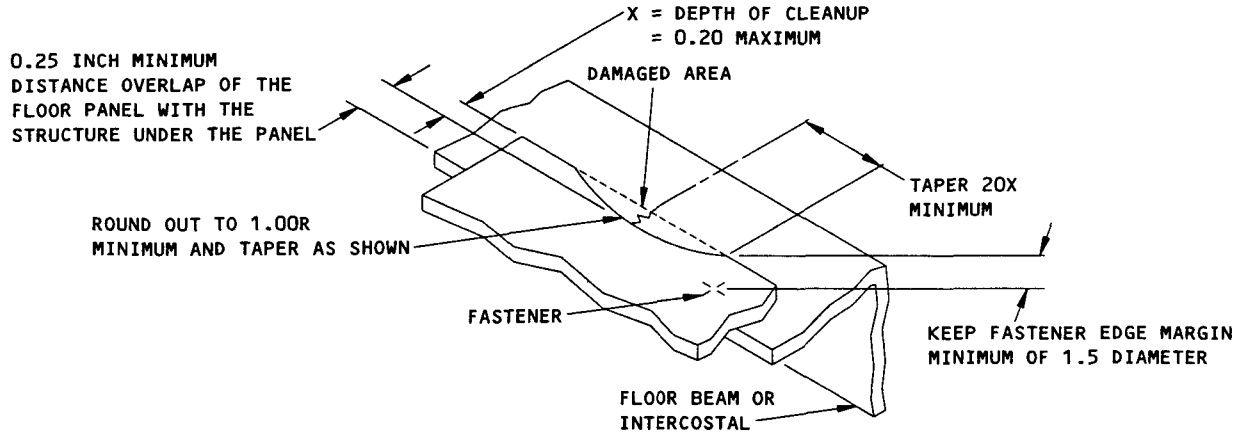

REMOVAL OF DAMAGE ON AN EDGE
DETAIL I

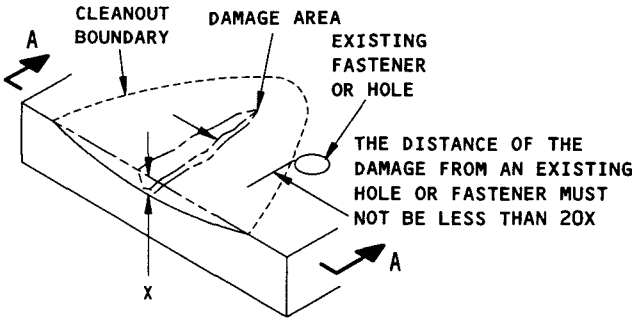

REMOVAL OF NICK, GOUGE, CORROSION
AND SCRATCH DAMAGE ON A SURFACE
DETAIL II

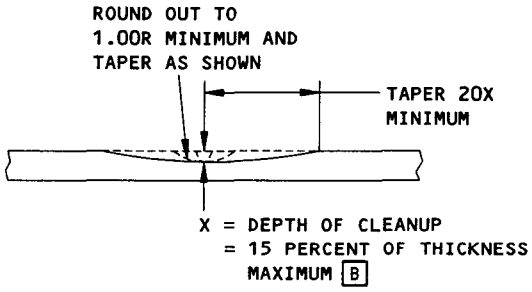

A-A

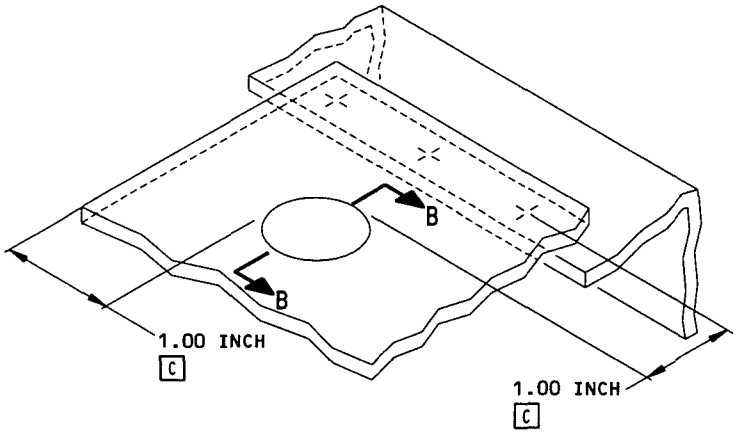

ALLOWABLE DAMAGE FOR DENT
ON ALUMINUM CARGO FLOOR PANELS
DETAIL III

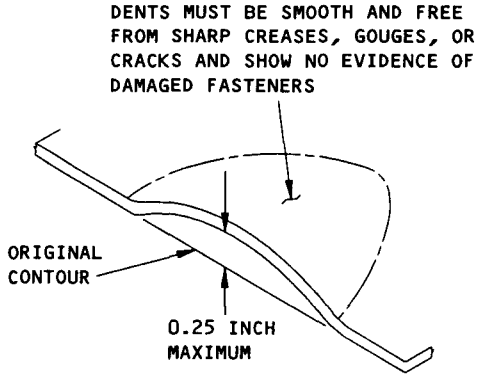

B-B

Section 43 and 46 Cargo Floor Panel Allowable Damage
Figure 11 (Sheet 2)

BOEING PROPRIETARY - Copyright © - Unpublished Work - See title page for details.

ITEM	INBOARD CHORD		WEB OR FORMED SECTION		OUTBOARD CHORD	
	MATERIAL	REPAIR FIG. NO.	MATERIAL	REPAIR FIG. NO.	MATERIAL	REPAIR FIG. NO.
1			BAC1493-599 CLAD 7075-T6	51-40-3 Fig. 1	BAC1514-1538 (FWD) BAC1514-1537 (AFT) 2024-T42	51-40-4
2	BAC1517-1154 2024-T42	51-40-4				
3			BAC1517-1470 CLAD 7075-T6	51-40-3 Fig. 1		
4	BAC1506-1653 2024-T42	51-40-4	0.063 CLAD 7075-T6	51-40-2 Fig. 1	BAC1517-1153 2024-T42	51-40-4
5	BAC1517-1491 CLAD 7075-T6	51-40-3 Fig. 1	0.040 CLAD 7075-T6	51-40-2 Fig. 1		
6	BAC1505-100542 2024-T42	51-40-4	0.032 CLAD 7075-T6	51-40-2 Fig. 1	BAC1506-1743 2024-T42 OPT 7075-T6	51-40-4
7	BAC1506-923 2024-T42	51-40-4			BAC1506-922 2024-T42	51-40-4
8					BAC1506-864 7075-T6	51-40-4
9	BAC1506-919 2024-T4	51-40-4			BAC1506-921 2024-T42	51-40-4
10			0.051 CLAD 7075-T6	51-40-2 Fig. 1	BAC1506-867 2024-T4	51-40-4
11			BAC1517-1470 CLAD 7075-T6	51-40-3 Fig. 1		
12			0.072 CLAD 7075-T6	51-40-3 Fig. 1	BAC1506-729 7075-T6	51-40-4
13	AND10134-1206 7075-T6	51-40-4	0.063 CLAD 7075-T6	51-40-2 Fig. 1		
14	BAC1505-100190 2024-T42	51-40-4	0.080 CLAD 7075-T6	51-40-2 Fig. 1	BAC1503-4223 (FWD) 7075-T6	51-40-4

Section 41 Structure Identification
Figure 1 (Sheet 1)

ITEM	INBOARD CHORD		WEB OR FORMED SECTION		OUTBOARD CHORD	
	MATERIAL	REPAIR FIG. NO.	MATERIAL	REPAIR FIG. NO.	MATERIAL	REPAIR FIG. NO.
15	BAC1505-100361 (FWD) 7075-T6511	51-40-4	0.056 CLAD 7075-T6	51-40-2 Fig. 1	AND10136-2404 (AFT) 2024-T3511	51-40-4
16	BAC1505-100361 (FWD) 7075-T6511	51-40-4	UPPER 0.020 CENTER 0.036 CLAD 7075-T6	51-40-2 Fig. 1	AND10133-1001 (AFT) 2024-T3511	51-40-4
17	AND10134-1206 2024-T42	51-40-4	0.071 CLAD 7075-T6	51-40-2 Fig. 1		
18	AND10134-1204 7075-T6	51-40-4	0.036 CLAD 7075-T6	51-40-2 Fig. 1	BAC1506-1308 2024-T42	51-40-4
19	BAC1514-329 2024-T42	51-40-4	0.032 CLAD 7075-T6	51-40-2 Fig. 1	BAC1506-916 7075-T6	51-40-4
20	BAC1503-100228 7075-T6	51-40-4	0.025 CLAD 7075-T6	51-40-2 Fig. 1	BAC1506-1565 2024-T42	51-40-4
21	BAC1514-967 2024-T42	51-40-4	0.025 CLAD 7075-T6	51-40-2 Fig. 1	BAC1506-1488 7178-T6	51-40-4
22	BAC1514-1701 7075-T6	51-40-4	0.063 CLAD 7075-T6	51-40-2 Fig. 1	BAC1506-1805 7075-T6	51-40-4
23	AND10133-1001 7075-T6	51-40-4	0.025 CLAD 7075-T6	51-40-2 Fig. 1	BAC1506-1744 2024-T42	51-40-4
24	BAC1503-100018 2024-T42	51-40-4	0.032 CLAD 7075-T6	51-40-2 Fig. 1	BAC1506-1082 2024-T42	51-40-4
25	BAC1503-100230 2024-T42	51-40-4	0.025 CLAD 7075-T6	51-40-2 Fig. 1	BAC1506-1744 2024-T42	51-40-4
26	BAC1505-100542 2024-T42	51-40-4	0.036 CLAD 7075-T6	51-40-2 Fig. 1	BAC1506-1743 2024-T42	51-40-4
27	BAC1514-1017 7075-T6	51-40-4	0.040 CLAD 7075-T6	51-40-2 Fig. 1	BAC1490-2804 7075-T6	51-40-4
28	BAC1505-100221 7075-T6	51-40-4	0.063 CLAD 7075-T6	51-40-2 Fig. 1	BAC1514-1532 7075-T6	51-40-4
29	BAC1506-1653 2024-T42	51-40-4	0.090 CLAD 7075-T6	51-40-2 Fig. 1	BAC1517-1153 2024-T4	51-40-4

Section 41 Structure Identification
Figure 1 (Sheet 2)

BOEING PROPRIETARY - Copyright © - Unpublished Work - See title page for details.

	INBOARD CHORD		WEB OR FORMED SECTION		OUTBOARD CHORD	
ITEM	MATERIAL	REPAIR FIG. NO.	MATERIAL	REPAIR FIG. NO.	MATERIAL	REPAIR FIG. NO.
30	0.090 CLAD 7075-T6	51-40-3 Fig. 1	0.040 CLAD 7075-T6	51-40-2 Fig. 1	0.100 2024-T4	51-40-3 Fig. 1
31	BAC1514-1273 2024-T42	51-40-4			BAC1517-1154 2024-T42	51-40-4
32	BAC1514-689 2024-T4 (+ 0.063 CLAD 2024-T3 REINF STRAP H K)	51-40-4	0.056 WEB + 0.020 DOUBLER CLAD 7075-T6	51-40-2 Fig. 1	BAC1505-100276 2024-T4	51-40-4
33	REINF STRAP K 0.16 2024-T3		0.045 CLAD 7075-T6	51-40-3 Fig. 1	BAC1514-1538 (FWD) BAC1514-1537 (AFT) 2024-T42	51-40-4
34	BAC1503-2732 2024-T4	51-40-4	0.040 CLAD 7075-T6	51-40-2 Fig. 1	BAC1503-2732 2024-T4	51-40-4
35					BAC1520-694 2024-T4	51-40-4
36	BAC1505-10021 7075-T6	51-40-4	0.063 CLAD 7075-T6	51-40-2 Fig. 1	BAC1514-850 7075-T6	51-40-4
37	AND10134-1602 2024-T42	51-40-4	FWD 0.040 AFT 0.063 CLAD 7075-T6	51-40-2 Fig. 1	BAC1506-888 (FWD) BAC1506-887 (AFT) 7075-T6	51-40-4
38			0.040 CLAD 2024-T3	53-10-11 Fig. 1		
39			0.032 CLAD 2024-T3	53-10-11 Fig. 1		
40	AND10133-1403 7075-T6	51-40-4				
41			0.094 CLAD 7075-T6	51-40-3 Fig. 1		
42			0.090 CLAD 7075-T6	51-40-3 Fig. 1		

Section 41 Structure Identification
Figure 1 (Sheet 3)

ITEM	INBOARD CHORD		WEB OR FORMED SECTION		OUTBOARD CHORD	
	MATERIAL	REPAIR FIG. NO.	MATERIAL	REPAIR FIG. NO.	MATERIAL	REPAIR FIG. NO.
43	AND10138-1402 7075-T6	51-40-4				
44	AND10134-2008 7057-T6	51-40-4				
45			0.071 CLAD 2024-T3			
46			0.063 CLAD 2024-T3			
47			0.045 CLAD 7075-T6	51-40-3 Fig. 1	BAC1490-2569 CLAD 7075-T6	51-40-3 Fig. 1
48			0.071 CLAD 7075-T6	51-40-3 Fig. 1	BAC1514-1674 2024-T42	51-40-4
49	0.080 CLAD 7075-T6	51-40-3 Fig. 1	0.032 CLAD 7075-T6	51-40-2 Fig. 1	BAC1506-1186 2024-T42	51-40-4
50			0.071 CLAD 7075-T6	51-40-3 Fig. 1	BAC1514-1673 2024-T42	51-40-4
51	BAC1490-2734 7075-T6 CLAD	51-40-3 Fig. 1	0.032 CLAD 7075-T6	51-40-2 Fig. 1	BAC1503-100147 7075-T6511	51-40-4
52	BAC1505-100542 2024-T4	51-40-4	0.036 CLAD 7075-T6	51-40-2 Fig. 1	BAC1506-01642 7075-T6	51-40-4
53	BAC1503-100225 7075-T6511	51-40-4				
54	BAC1514-329 2024-T42	51-40-4	0.040 CLAD 7075-T6	51-40-2 Fig. 1	BAC1506-916 2024-T42	51-40-4
55	AND10134-1204 7075-T6	51-40-4	0.020 CLAD 7075-T6	51-40-2 Fig. 1	BAC1506-1308 2024-T42	51-40-4
56	BAC1503-2729 2024-T42	51-40-4	0.071 CLAD 7075-T6	51-40-2 Fig. 1	BAC1489-92 7075-T6	51-40-4
57	AND10136-2404 (AFT) 2024-T3511	51-40-4	0.025 CLAD 7075-T6	51-40-2 Fig. 1	BAC1505-100361 (FWD) 7075-T6511	51-40-4

Section 41 Structure Identification
Figure 1 (Sheet 4)

ITEM	INBOARD CHORD		WEB OR FORMED SECTION		OUTBOARD CHORD	
	MATERIAL	REPAIR FIG. NO.	MATERIAL	REPAIR FIG. NO.	MATERIAL	REPAIR FIG. NO.
58	BAC1503-2729 2024-T42	51-40-4	0.020 CLAD 7075-T6	51-40-2 Fig. 1	BAC1489-92 7075-T6	51-40-3 Fig. 1
59	BAC1503-2729 2024-T42	51-40-4	0.020 CLAD 7075-T6	51-40-2 Fig. 1	BAC1489-172 7075-T6	51-40-3 Fig. 1
60	BAC1503-100055 7075-T6	51-40-4	0.032 CLAD 7075-T6	51-40-2 Fig. 1	BAC1506-1744 2024-T42	51-40-4
61	BAC1505-100274 7075-T6	51-40-4	0.025 CLAD 7075-T6	51-40-2 Fig. 1	BAC1506-1744 2024-T42	51-40-4
62	BAC1514-1701 7075-T6	51-40-4	0.040 CLAD 7075-T6	51-40-2 Fig. 1	BAC1506-1532 7075-T6	51-40-4
63	AND10137-2402 7075-T6511	51-40-4				
64	AND10133-1202 7075-T6511	51-40-4				
65	BAC1514-1536 7075-T6511	51-40-4				
66	BAC1506-1742 2024-T3511	51-40-4				
67	BAC1503-100055 7075-T6	51-40-4	0.032 CLAD 7075-T6	51-40-2 Fig. 1	BAC1506-1082 2024-T42	51-40-4
68	AND10133-1002 7075-T6511	51-40-4				
69			0.063 CLAD 7075-T6	51-40-3 Fig. 1	BAC1489-51 7075-T6	51-40-3 Fig. 1
70	BAC1503-100071 7075-T6	51-40-4	0.040 CLAD 7075-T6	51-40-2 Fig. 1	BAC1489-209 7075-T6	51-40-3 Fig. 1
71	BAC1505-100550 7075-T6	51-40-4	0.040 CLAD 2024-T3	51-40-2 Fig. 1	BAC1506-1765 7075-T6	51-40-4
72			0.045 CLAD 7075-T6	51-40-3 Fig. 1	BAC1490-2808 7075-T6 CLAD	51-40-3 Fig. 1

Section 41 Structure Identification
Figure 1 (Sheet 5)

ITEM	INBOARD CHORD		WEB OR FORMED SECTION		OUTBOARD CHORD	
	MATERIAL	REPAIR FIG. NO.	MATERIAL	REPAIR FIG. NO.	MATERIAL	REPAIR FIG. NO.
73			0.040 CLAD 7075-T6	51-40-3 Fig. 1	BAC1514-952 7075-T6	51-40-4
74			0.045 CLAD 7075-T6	51-40-3 Fig. 1	BAC1505-100364 2024-T42	51-40-4
75	BAC1514-1613 2024-T42	51-40-4	0.071 CLAD 7075-T6	51-40-2 Fig. 1	BAC1506-1652 2024-T42	51-40-4
76	BAC1520-1377 7075-T6511		0.040 CLAD 7075-T6	51-40-2 Fig. 1	BAC1490-2759 7075-T6	51-40-3 Fig. 1
77	BAC1490-2642 7075-T6	51-40-3 Fig. 1	0.040 CLAD 7075-T6	51-40-2 Fig. 1	BAC1490-2759 7075-T6	51-40-3 Fig. 1
78	AND10134-1204 7075-T6	51-40-4	0.040 CLAD 7075-T6	51-40-2 Fig. 1	BAC1489-233 7075-T6	51-40-3 Fig. 1
79	AND10134-1204 7075-T6	51-40-4	0.040 CLAD 7075-T6	51-40-2 Fig. 1	BAC1506-921 2024-T42	51-40-4
80	AND10133-1001 7075-T6	51-40-4	0.040 CLAD 7075-T6	51-40-2 Fig. 1	AND10136-2402 2024-T4	51-40-4
81			0.040 CLAD 7075-T6	51-40-3 Fig. 1	BAC1490-2808 7075-T6 CLAD	51-40-3 Fig. 1
82	AND10134-1204 7075-T6511	51-40-4	0.040 CLAD 7075-T6	51-40-2 Fig. 1	BAC1490-63 7075-T6511	51-40-3 Fig. 1
83	BAC1503-100007 7075-T6	51-40-4	0.063 CLAD 7075-T6	51-40-2 Fig. 1	BAC1490-2522 7075-T6	51-40-3 Fig. 1
84	BAC1503-100028 7075-T6	51-40-4	0.045 CLAD 7075-T6	51-40-2 Fig. 1	BAC1490-63 CLAD 7075-T6	51-40-3 Fig. 1
85			0.040 CLAD 7075-T6	51-40-3 Fig. 1	BAC1490-2579 7075-T6	51-40-3 Fig. 1
86			0.040 CLAD 7075-T6	51-40-3 Fig. 1	BAC1490-2579 7075-T6	51-40-3 Fig. 1
87			BAC1517-1491 7075-T6 CLAD			

Section 41 Structure Identification
Figure 1 (Sheet 6)

ITEM	INBOARD CHORD		WEB OR FORMED SECTION		OUTBOARD CHORD	
	MATERIAL	REPAIR FIG. NO.	MATERIAL	REPAIR FIG. NO.	MATERIAL	REPAIR FIG. NO.
88			0.045 CLAD 7075-T6	51-40-3 FIG. 1	BAC1490-2808 CLAD 7075-T6	51-40-3 FIG. 1
89	REINF STRAP J K 0.16 2024-T3		0.045 CLAD 7075-T6	51-40-3 FIG. 1	BAC1489-286 CLAD 7075-T6	51-40-3 FIG. 1
90			0.062 INCONEL X AMS 5542			
91			0.025 CORROSION RESISTANT STEEL			
92			REINFORCEMENT STRAP 0.125 CRES AISI 301 TO MIL-S-5059 COMP 301 SURFACE COND 2D 1/2 HARD			
93			0.040 CLAD 7075-T6		BAC1490-63 CLAD 7075-T6	
94			INTERCOSTAL 0.040 CLAD 7075-T6			
95	INTERCOSTAL 0.050 CLAD 7075-T6					
96	INTERCOSTAL 0.056 CLAD 7075-T6					
97	INTERCOSTAL 0.063 CLAD 7075-T6					
98			0.056 CLAD 7075-T6			
99	ANGLE 0.040 2024-T42					

Section 41 Structure Identification
Figure 1 (Sheet 6A)

ITEM	INBOARD CHORD		WEB OR FORMED SECTION		OUTBOARD CHORD	
	MATERIAL	REPAIR FIG. NO.	MATERIAL	REPAIR FIG. NO.	MATERIAL	REPAIR FIG. NO.
100			0.10 7075-T6 CHEM MILLED L OR BONDED WEB ASSY 0.063 WEB 7075-T6 0.040 DOUBLER 7075-T6 M			
101			BAC1493-512 2024-T3			
102			0.080 CLAD 2024-T3			
103			INTERCOSTAL 0.045 CLAD 7075-T6			
104			INTERCOSTAL 0.040 CLAD 7075-T6			
105			INTERCOSTAL 0.050 CLAD 7075-T6			
106	INTERCOSTAL 0.071 CLAD 7075-T6					
107	INTERCOSTAL 0.063 CLAD 7075-T6					
108	TEE BAC1505-100557 7075-T6511		INTERCOSTAL 0.071 CLAD 7075-T6			
109			INTERCOSTAL 0.050 CLAD 7075-T6			
110			INTERCOSTAL 0.045 CLAD 7075-T6			

Section 41 Structure Identification
Figure 1 (Sheet 6B)

ITEM	INBOARD CHORD		WEB OR FORMED SECTION		OUTBOARD CHORD	
	MATERIAL	REPAIR FIG. NO.	MATERIAL	REPAIR FIG. NO.	MATERIAL	REPAIR FIG. NO.
111			INTERCOSTAL 0.056 CLAD 7075-T6			
112	TEE AND10136-3005 7075-T6511		INTERCOSTAL 0.071 CLAD 7075-T6			
113	TEE AND10136-176 7075-T6511		INTERCOSTAL 0.071 CLAD 7075-T6			
114	TEE AND10136-2404 7075-T6511		INTERCOSTAL 0.071 CLAD 7075-T6			
115			ANGLE 0.051 CLAD 7075-T6			
116			TEE BAC1506-1289 2024-T3511 EXTRUSION			
117			ANGLE BAC1514-1576 2024-T3511 EXTRUSION			
118			ANGLE 0.051 CLAD 7075-T6			

Section 41 Structure Identification
Figure 1 (Sheet 7)

NOTES

[A] FOR CUM LINE NUMBERS:
1 THRU 32

[B] FOR ALL PASSENGER AIRPLANES EXCEPT THOSE COVERED BY [A]

[C] BONDED ASSEMBLY

[D] FOR CUM LINE NUMBERS:
448 AND ON AND AIRPLANES WITH SB 53-1023 INCORPORATED

[E] DELETED

[F] FOR MODIFICATION OF THIS AREA INCORPORATED SB 53-1040

[G] FORWARD AIRSTAIRS AND AIRSTAIRS DOOR ARE NOT INCLUDED ON AIRPLANE LINE NUMBERS:
726, 727, 734, 735, 745, 754, 759, 762, 766, 768, 770, 776, 780, 781, 785, 788, 791, 792, 794, 796, 798

[H] FOR CUM LINE NUMBERS:
952 THRU 974 AND 976 THRU 989

[J] FOR CUM LINE NUMBERS:
939 THRU 950, 952 THRU 974, 976 THRU 994, 997 THRU 1000, 1003 THRU 1011

[K] FOR AIRPLANES WITH SB 53A1064 INCORPORATED, LEFT SIDE FRAME ONLY

[L] FOR CUM LINE NUMBER:
1422 THRU 1585 (BOEING REF: P4350-P4399, P4801-P5499, P8979-P9995)

[M] FOR AIRPLANES NOT LISTED IN [L]

[N] FOR AIRPLANES WITH SB 737-53-1090 INCORPORATED

[O] FOR AIRPLANES WITH SB 737-53A1108 INCORPORATED

[P] FOR PASSENGER AIRPLANES CUM LINE NUMBERS:
1 THRU 1426

[Q] FOR PASSENGER AIRPLANES CUM LINE NUMBERS:
1427 THRU 1488 AND AIRPLANES WITH PREVENTIVE MODIFICATION PER 53A1108

[R] FOR PASSENGER AIRPLANES CUM LINE NUMBER:
1489

[S] FOR CARGO AIRPLANES WITH PREVENTIVE MODIFICATION PER 53A1108

[T] FOR ALL CARGO AIRPLANES EXCEPT THOSE COVERED BY [S]

[U] FOR PASSENGER AIRPLANES CUM LINE NUMBERS:
773, 792 WITH SB 52-1106 INCORPORATED

Section 41 Structure Identification
Figure 1 (Sheet 7A)

REF. DWG. 65-73741

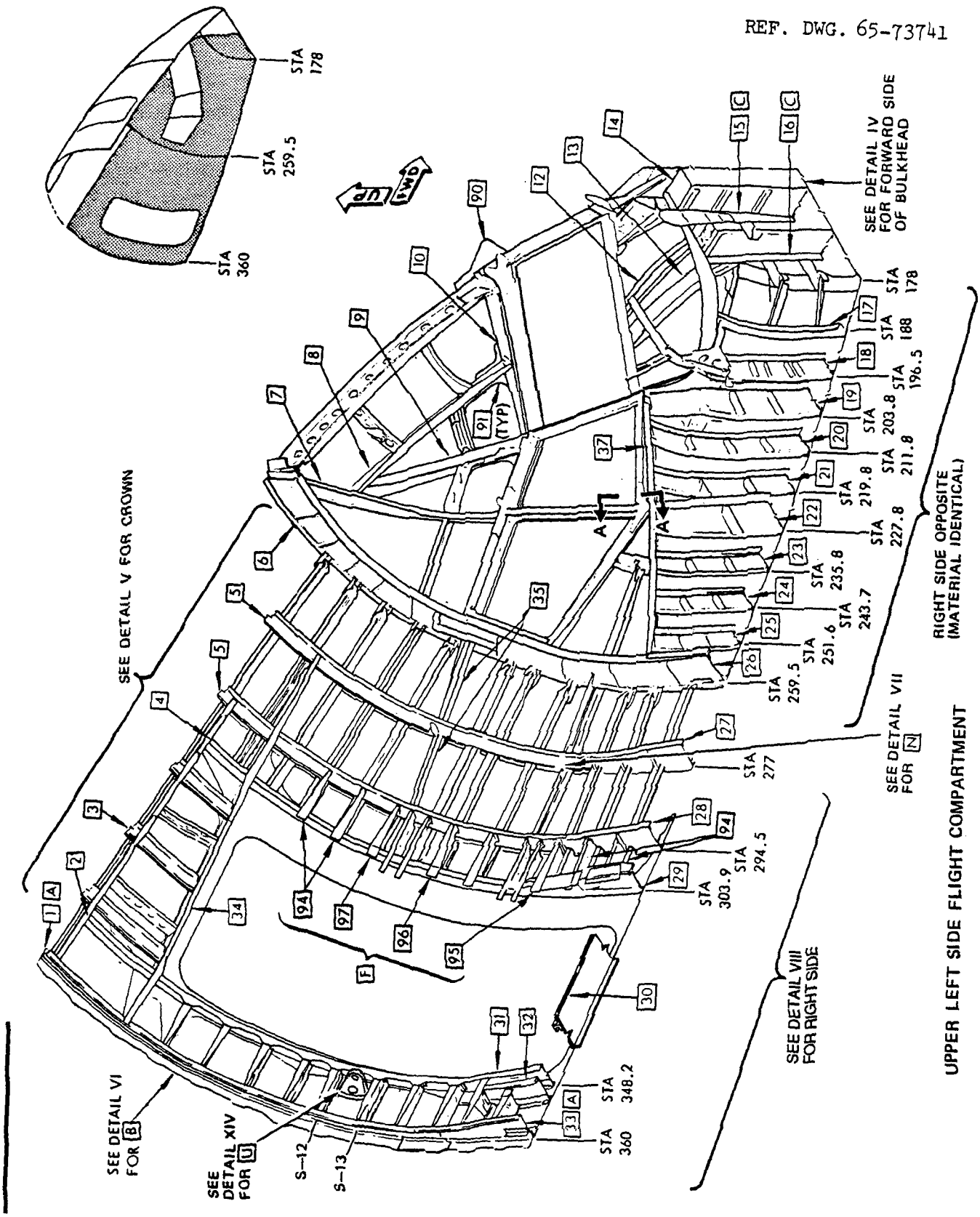

Section 41 Structure Identification
Figure 1 (Sheet 8)

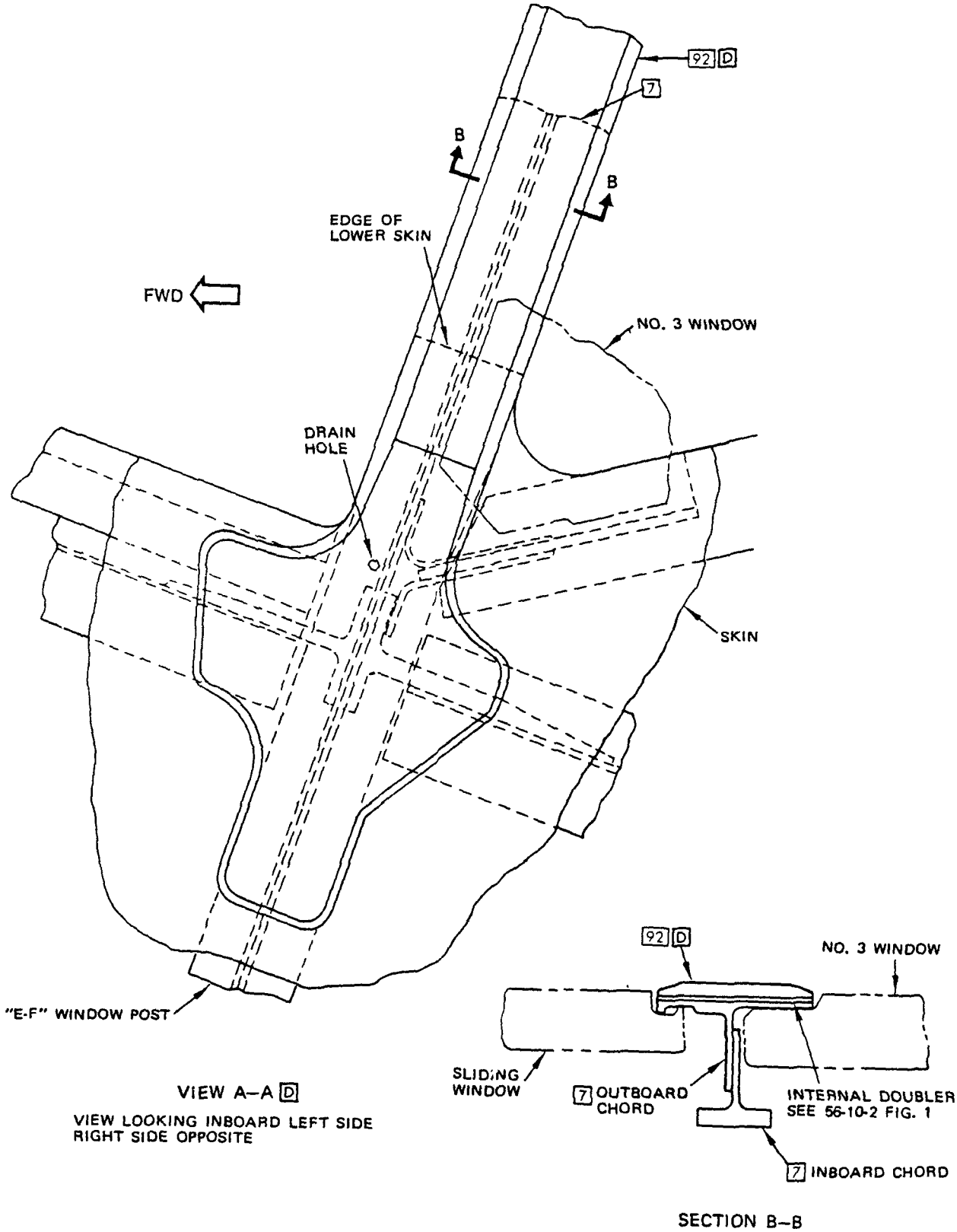

Section 41 Structure Identification
Figure 1 (Sheet 9)

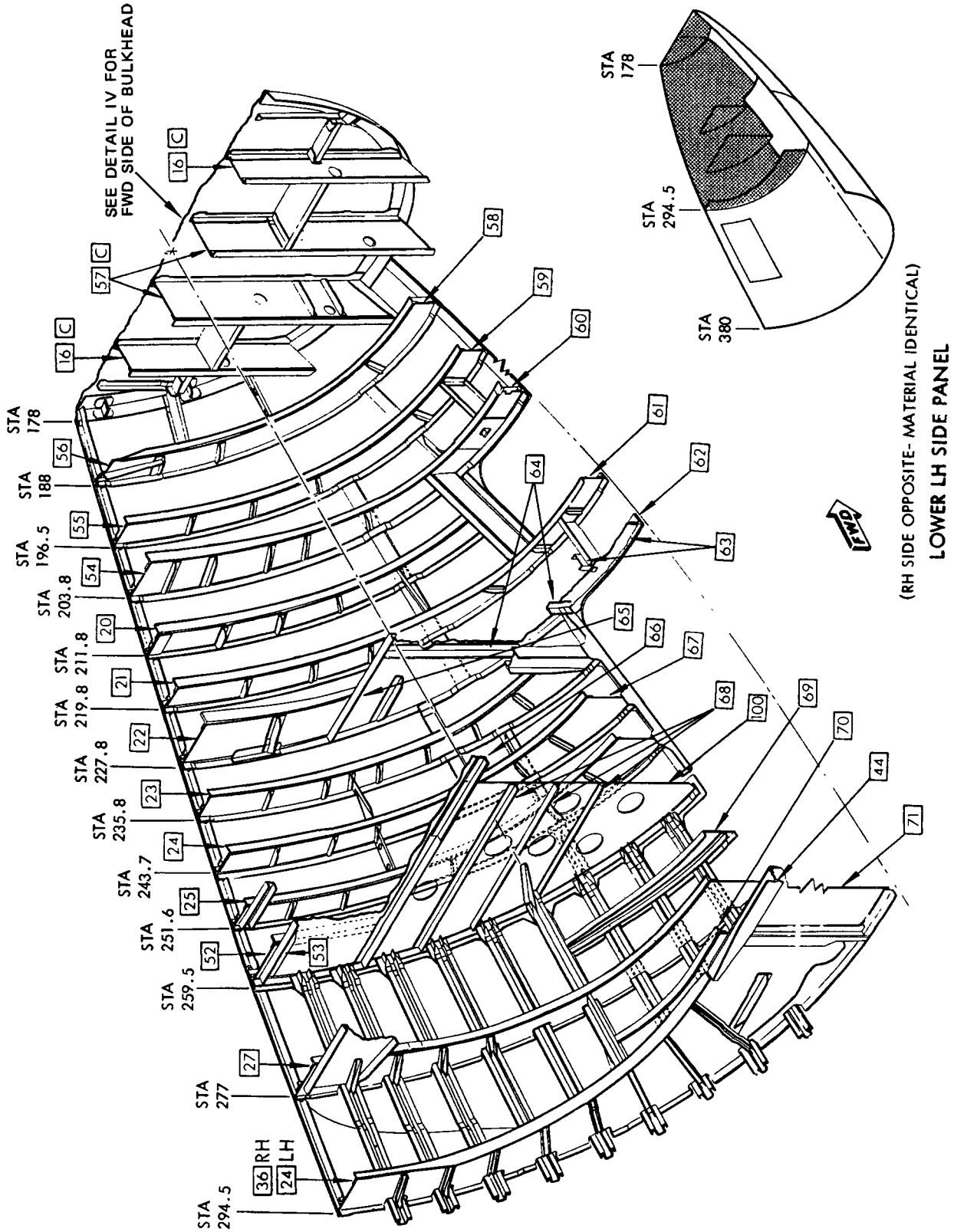

Section 41 Structure Identification
Figure 1 (Sheet 10)

BOEING PROPRIETARY - Copyright © - Unpublished Work - See title page for details.

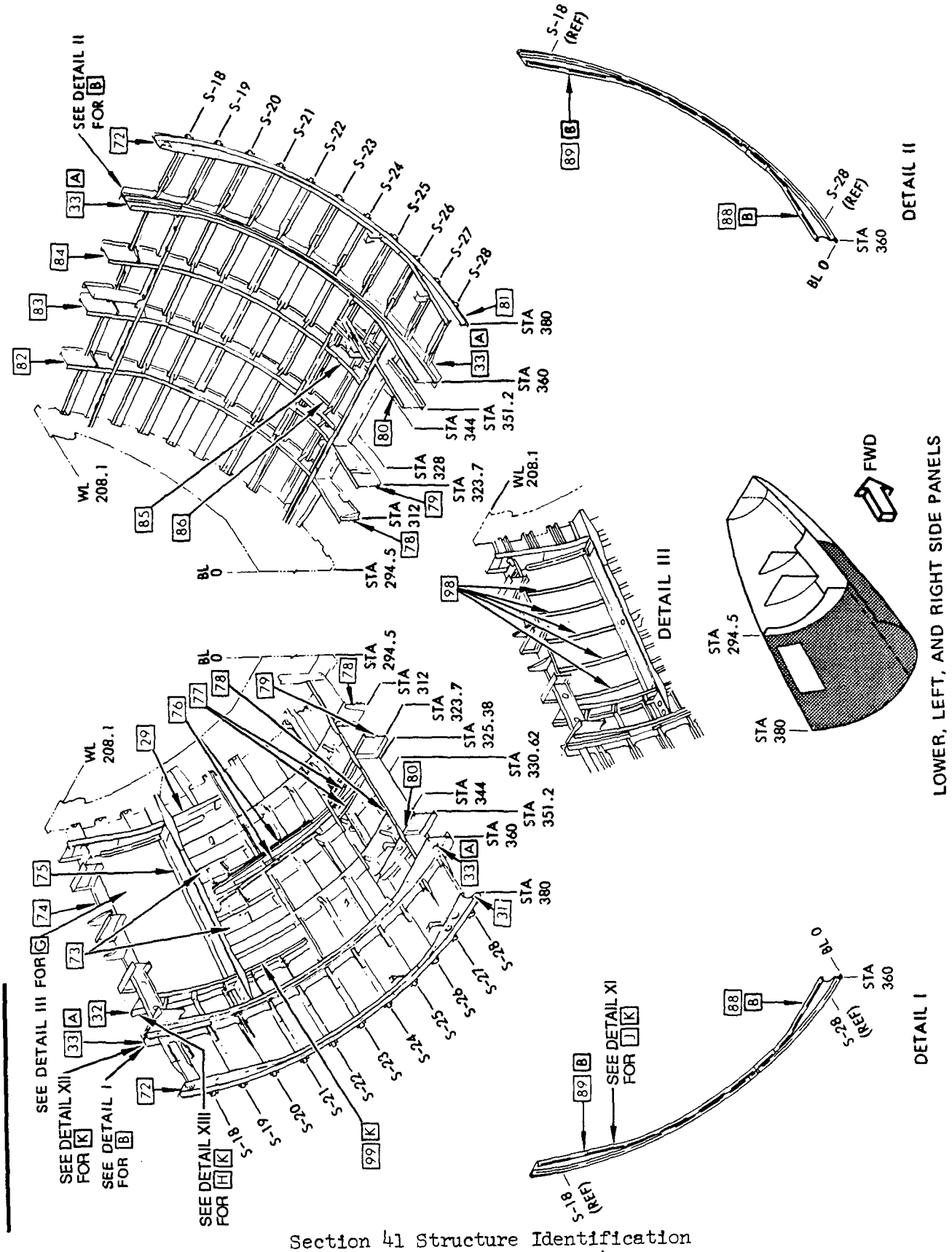

Section 41 Structure Identification
Figure 1 (Sheet 11)

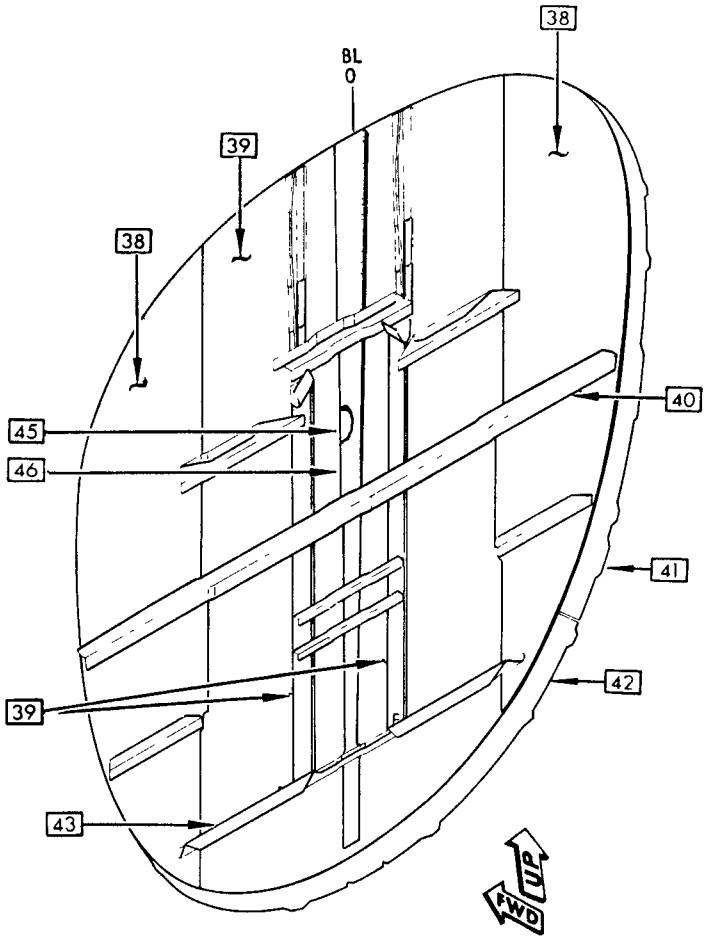

FWD SIDE OF BULKHEAD AT STA 178.0
DETAIL IV

UPPER RH FLIGHT COMPARTMENT

Section 41 Structure Identification
Figure 1 (Sheet 12)

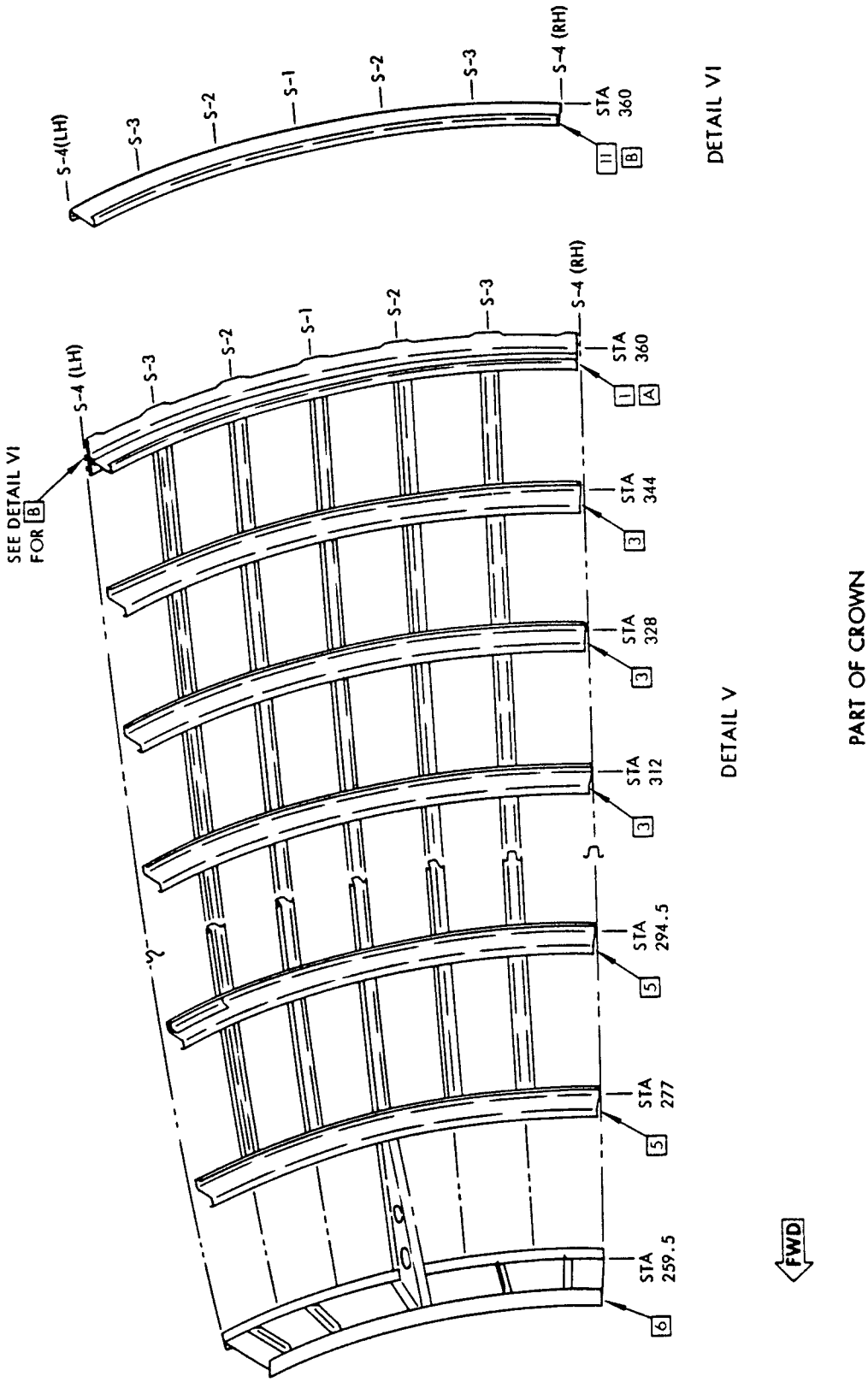

Section 41 Structure Identification
Figure 1 (Sheet 13)

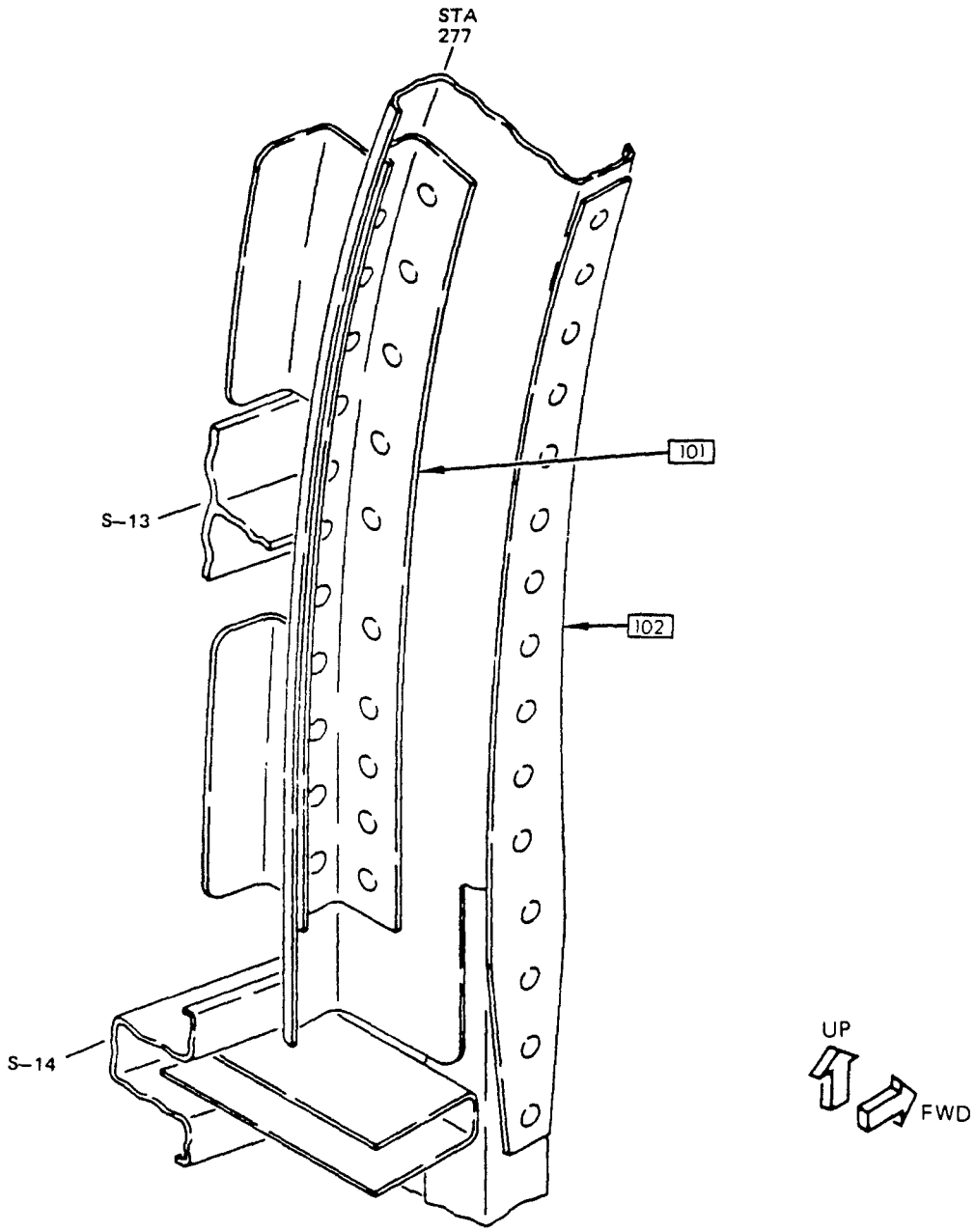

LEFT SIDE SHOWN
RIGHT SIDE OPPOSITE

DETAIL VII N

Section 41 Structure Identification
Figure 1 (Sheet 14)

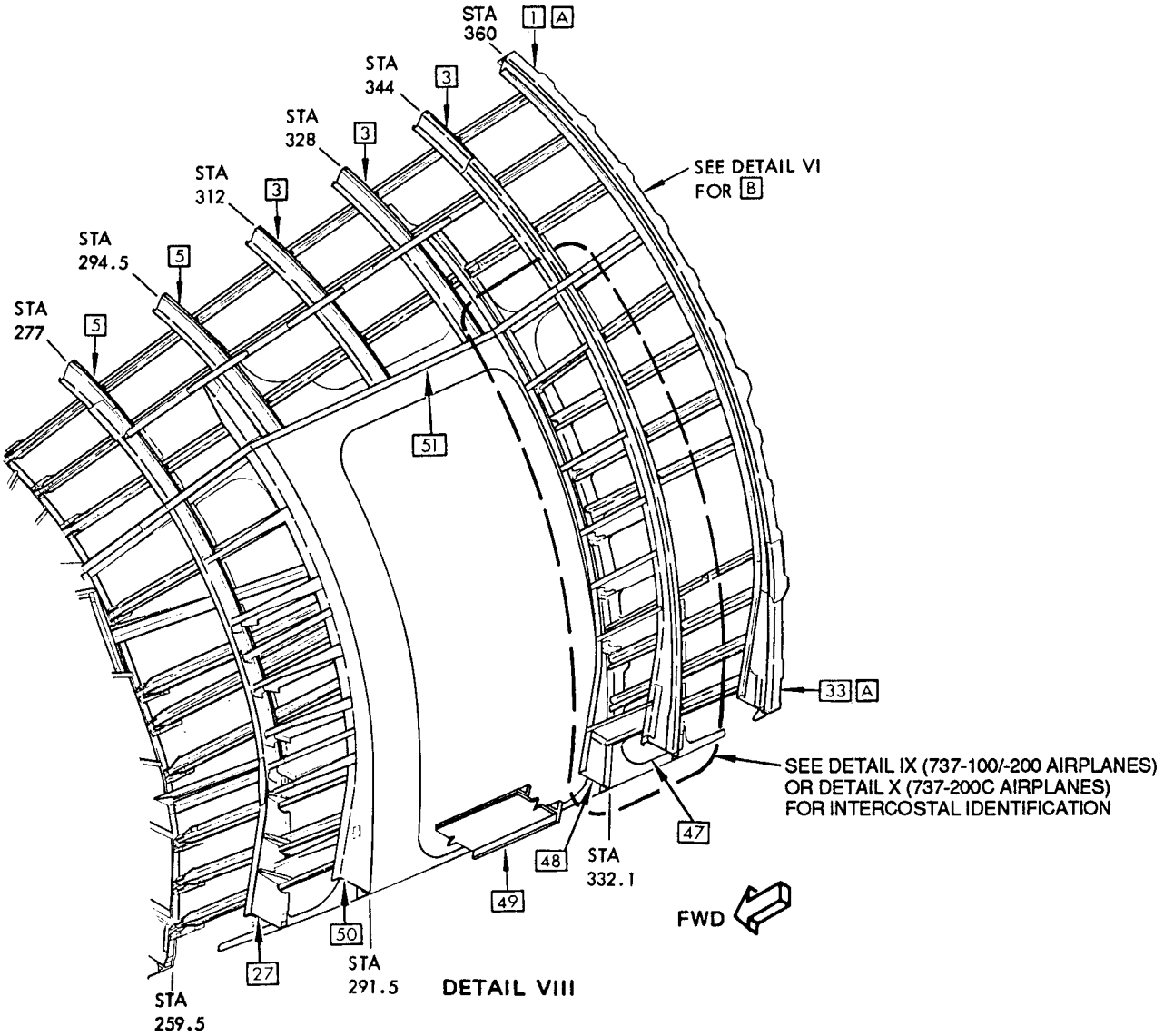

DETAIL VIII

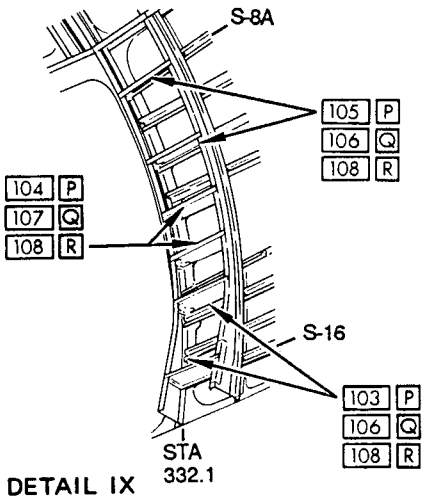

DETAIL IX
(737-100/-200 AIRPLANES)

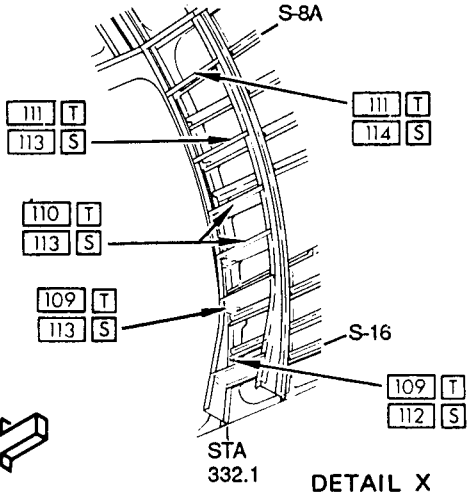

FWD

DETAIL X
(737-200C AIRPLANES)

Section 41 Structure Identification
Figure 1 (Sheet 15)

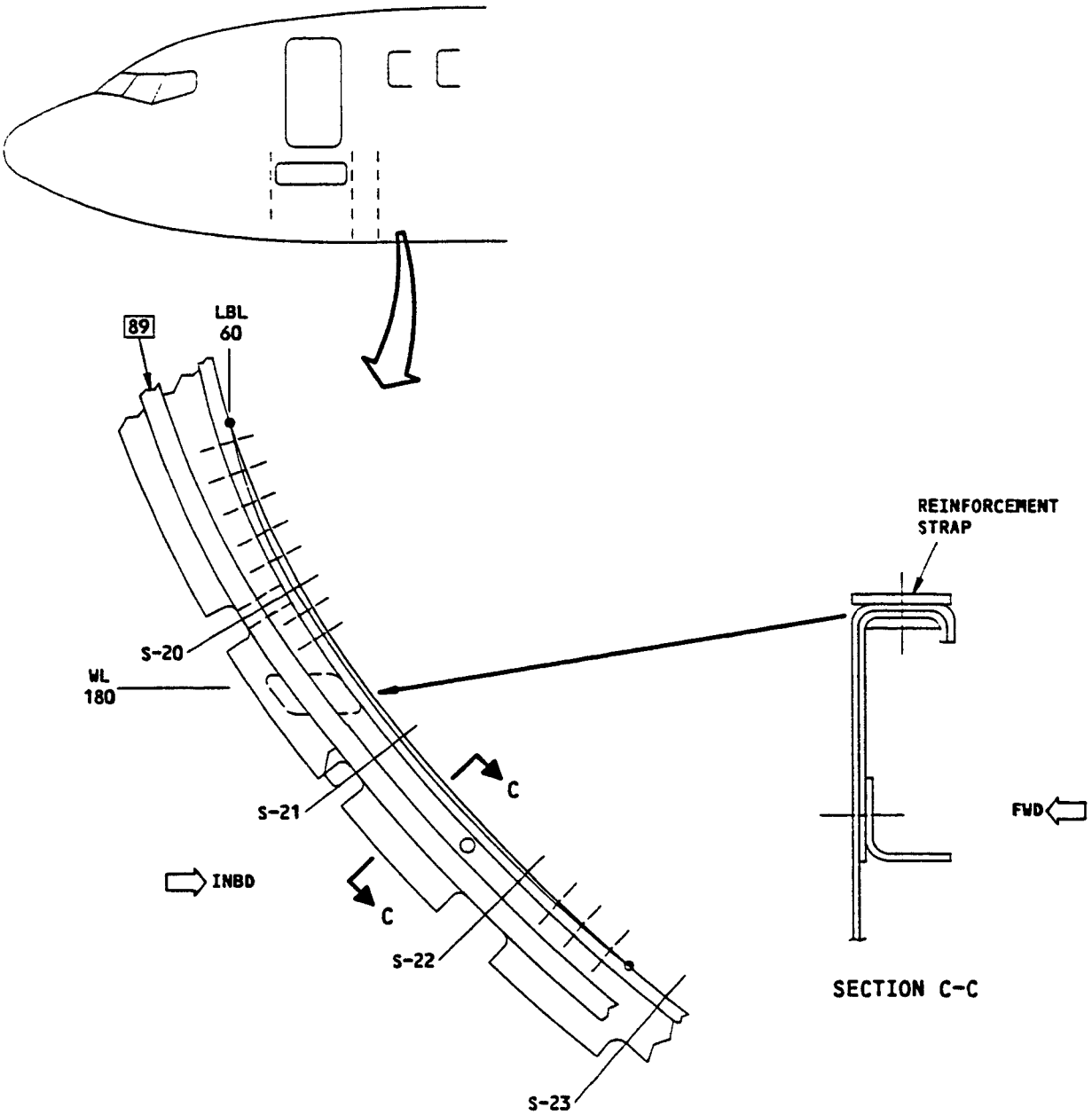

BODY STATION 360 FRAME
(VIEW LOOKING FORWARD)

DETAIL XI [J][K]

Section 41 Structure Identification
Figure 1 (Sheet 16)

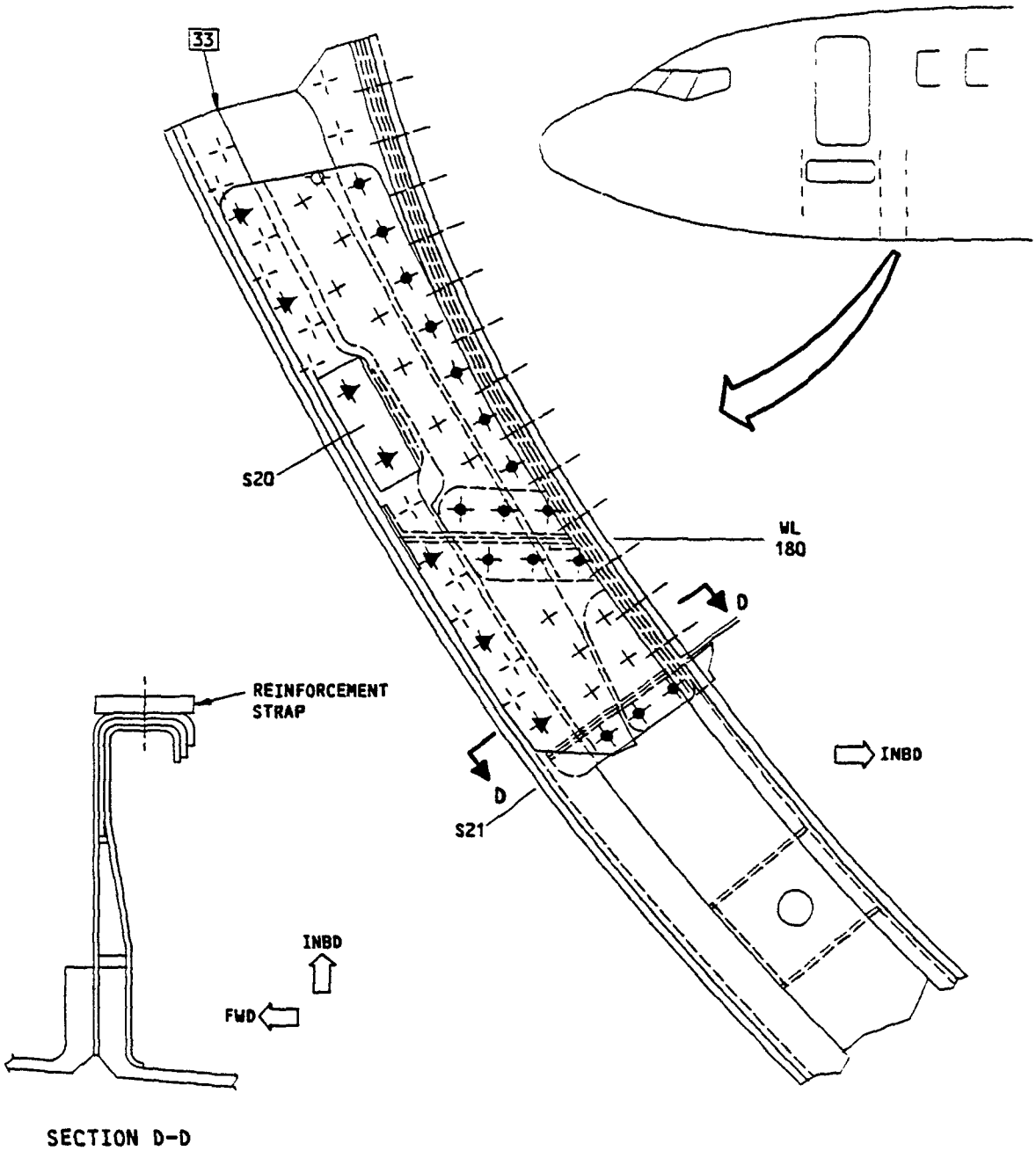

BODY STATION 360 FRAME
(VIEW LOOKING FORWARD)

DETAIL XII K

Section 41 Structure Identification
Figure 1 (Sheet 17)

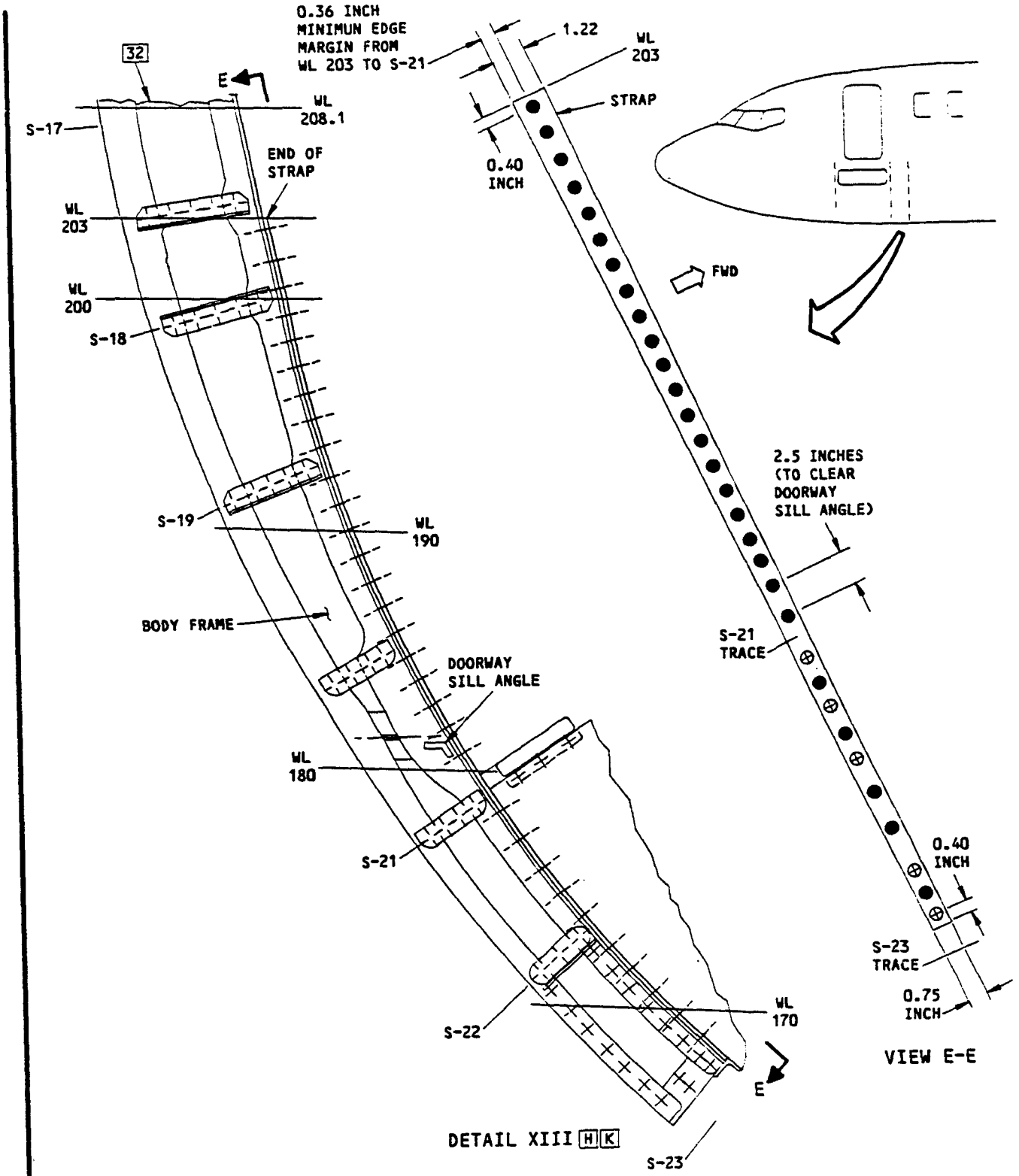

Section 41 Structure Identification
Figure 1 (Sheet 18)

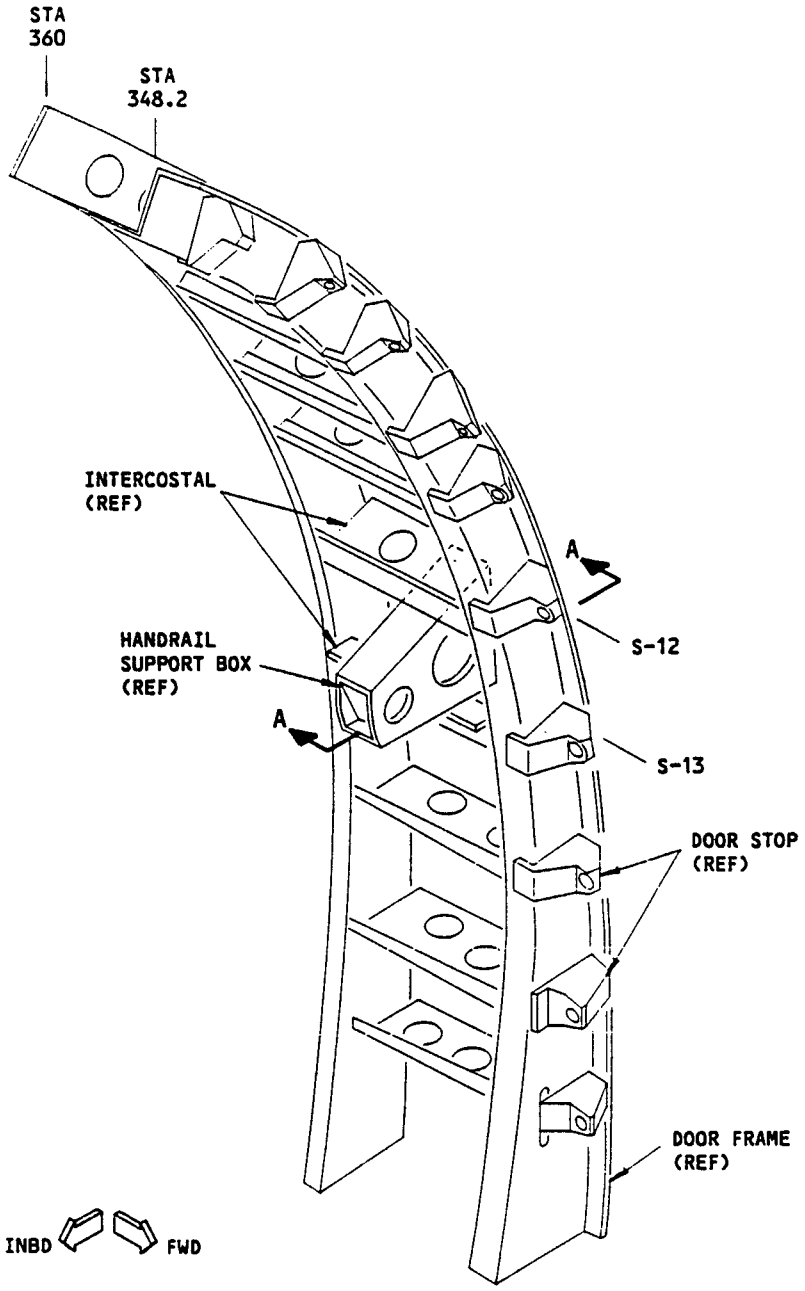

DETAIL XIV U

Section 41 Structure Identification
Figure 1 (Sheet 19)

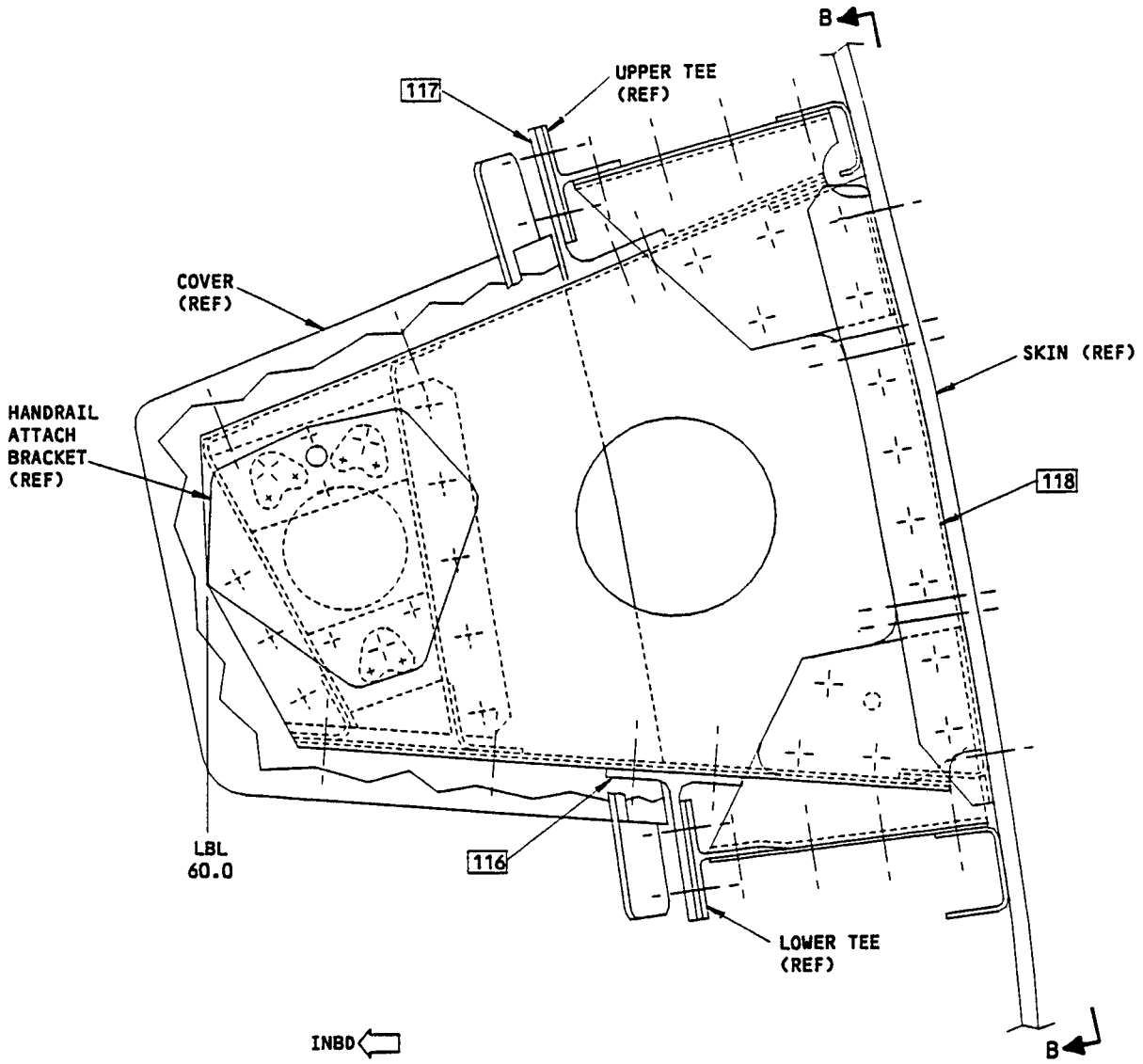

SECTION A-A

Section 41 Structure Identification
Figure 1 (Sheet 20)

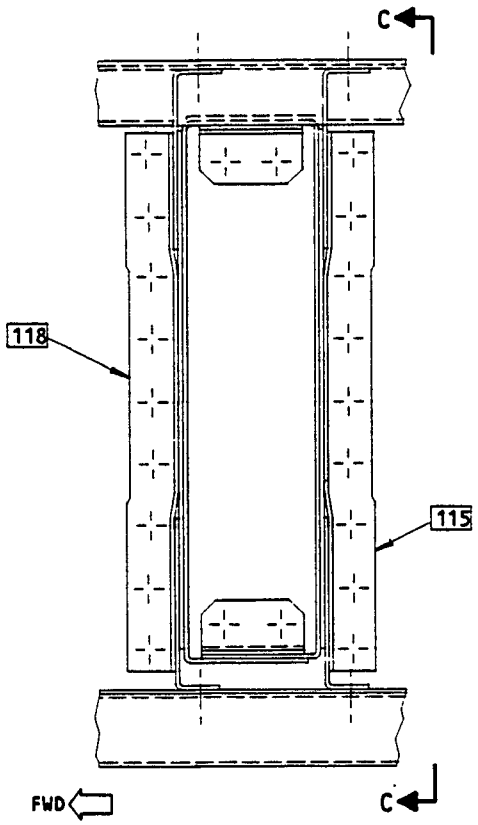

SKIN NOT SHOWN FOR CLARITY

SECTION B-B

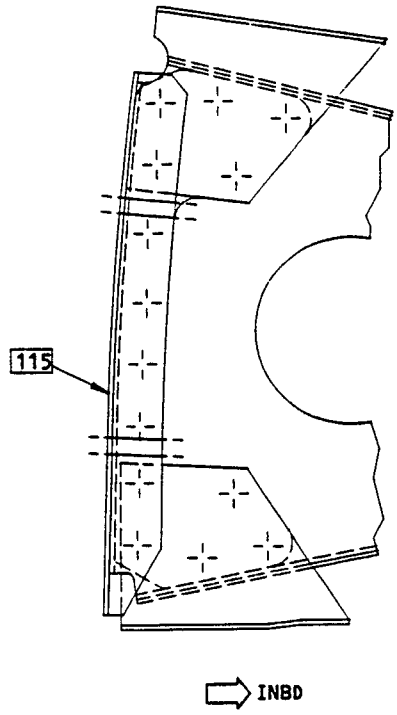

SECTION C-C

Section 41 Structure Identification
Figure 1 (Sheet 21)

ITEM	MATERIAL	REPAIR FIG. NO.
1	BAC1503-100096 7075-T6511	51-40-4
2	BAC1518-406 7075-T6511	51-40-4
3	AND10139-1107 7075-T6511	51-40-4
4	AND10137-2202 7075-T6511	51-40-4
5	BAC1505-100114 7075-T6511	51-40-4
6	BAC1505-100232 7075-T6511	
7	BAC1506-1742 2024-T3511	51-40-4
8	AND10136-2007 7075-T6	51-40-4
9	AND10134-2403 7075-T6511	51-40-4
10	AND10141-1602 7075-T6411	
11	BAC1505-100164 7075-T6511	
12	AND10137-2402 7075-T6511	51-40-4
13	0.063 CLAD 7075-T6	
14	0.040 CLAD 7075-T6	
15	AND10137-2005 7075-T6511	
16	0.071 7075-T6	
17	0.040 CLAD 2024-T3	
18	AND10136-2405 7075-T6511	51-40-4
19	BAC1505-100191 7075-T6511	51-40-4 Fig. 1
20	AND10134-1206 7075-T6511	
21	FORGING A 7075-T6 B 7075-T73 S 4340-STEEL HT 125-145KSI T V	
22	0.090 CLAD 7075-T6	
23	AND10137-2004 7075-T6511	51-40-4
24	AND10133-1203 7075-T6511	51-40-4
25	AND10134-2403 7075-T6511	51-40-4
26	AND10136-2002 7075-T6511	
27	0.125 7075-T6	51-40-3 Fig. 1
28	AND10133-1202 7075-T6511	51-40-4
29	BAC1503-2963 7075-T6511	
30	BAC1518-405 7075-T6511	51-40-4

Nose Wheel Well Structure Identification
Figure 2 (Sheet 1)

BOEING PROPRIETARY - Copyright © - Unpublished Work - See title page for details.

ITEM	MATERIAL	REPAIR FIG. NO.
31	BAC1506-1779 7075-T6511	
32	BAC1518-403 7075-T6511	51-40-4
33	BAC1506-1783 7075-T6511	51-40-4
34	BAC1517-486 7075-T6	
35	0.050 CLAD 7075-T6	
36	AND10136-2005 7075-T6511	
37	BAC1503-10874 7075-T6511	
38	AND10136-2007 7075-T6511	
39	FORGING 7079-T6 D 7075-T73 E	
40	FORGING 7079-T6 7075-T73	
41	FORGING 7079-T6 B 7075-T73 C	
42	FORGING 7079-T6 D 7075-T73 E	
43	FORGING 7079-T6 F 7075-T73 G H	
44	0.063 CLAD 2024-T3	

ITEM	MATERIAL	REPAIR FIG. NO.
45	0.050 CLAD 2024-T3	
46	BAC1506-1768 7075-T6511	
47	BAC1493-525 CLAD 2024-T3	
48	BAC1505-100550 7075-T6511	
49	BAC1493-318 CLAD 2024-T4	
50	0.032 CLAD 2024-T3	
51	BAC1490-2760 CLAD 7075-T6	
52	BAC1490-2548 CLAD 7075-T6	
53	AND10133-1001 7075-T6511	
54	BAC1506-1674 2024-T4	
55	0.040 CLAD 2024-T4	
56	0.056 CLAD 2024-T3	
57	0.071 CLAD 2024-T3	
58	0.063 CLAD 2024-T3	
59	AND10136-2402 7075-T6511	

Nose Wheel Well Structure Identification
Figure 2 (Sheet 2)

BOEING PROPRIETARY - Copyright © - Unpublished Work - See title page for details.

NOTES:

A ATTACHMENT FITTING

B FOR CUM LINE NUMBERS:
1 THRU 125

C FOR CUM LINE NUMBERS:
126 AND ON

D FOR CUM LINE NUMBERS:
1 THRU 142

E FOR CUM LINE NUMBERS:
143 AND ON

F FOR CUM LINE NUMBERS:
1 THRU 289

G FOR CUM LINE NUMBERS:
290 AND ON

H DELETED

J DELETED

K FOR CUM LINE NUMBERS:
1 THRU 344 WITH SB 53-1054
INCORPORATED

L FOR CUM LINE NUMBERS:
1 THRU 353

M FOR CUM LINE NUMBERS:
354 AND ON

N FOR CUM LINE NUMBERS:
1 THRU 344 WITHOUT SB 53-1054
INCORPORATED

P FOR CUM LINE NUMBERS:
345 AND ON

Q FOR CUM LINE NUMBERS:
1 THRU 374

R FOR CUM LINE NUMBERS:
375 AND ON

S FOR CUM LINE NUMBERS:
126 THRU 446

T FOR CUM LINE NUMBERS:
447 AND ON

U FOR AIRPLANES WITH SB 737-53-1079
INCORPORATED

V FOR CUM LINE NUMBERS:
1 THRU 446 WITH SB 53-1119
INCORPORATED

W FOR CUM LINE NUMBERS:
21011, 22751, 23092 THRU 23094
WITH SB 32-1400 INCORPORATED

Nose Wheel Well Structure Identification
Figure 2 (Sheet 3)

BOEING PROPRIETARY - Copyright © - Unpublished Work - See title page for details.

REF DWG
65-45819

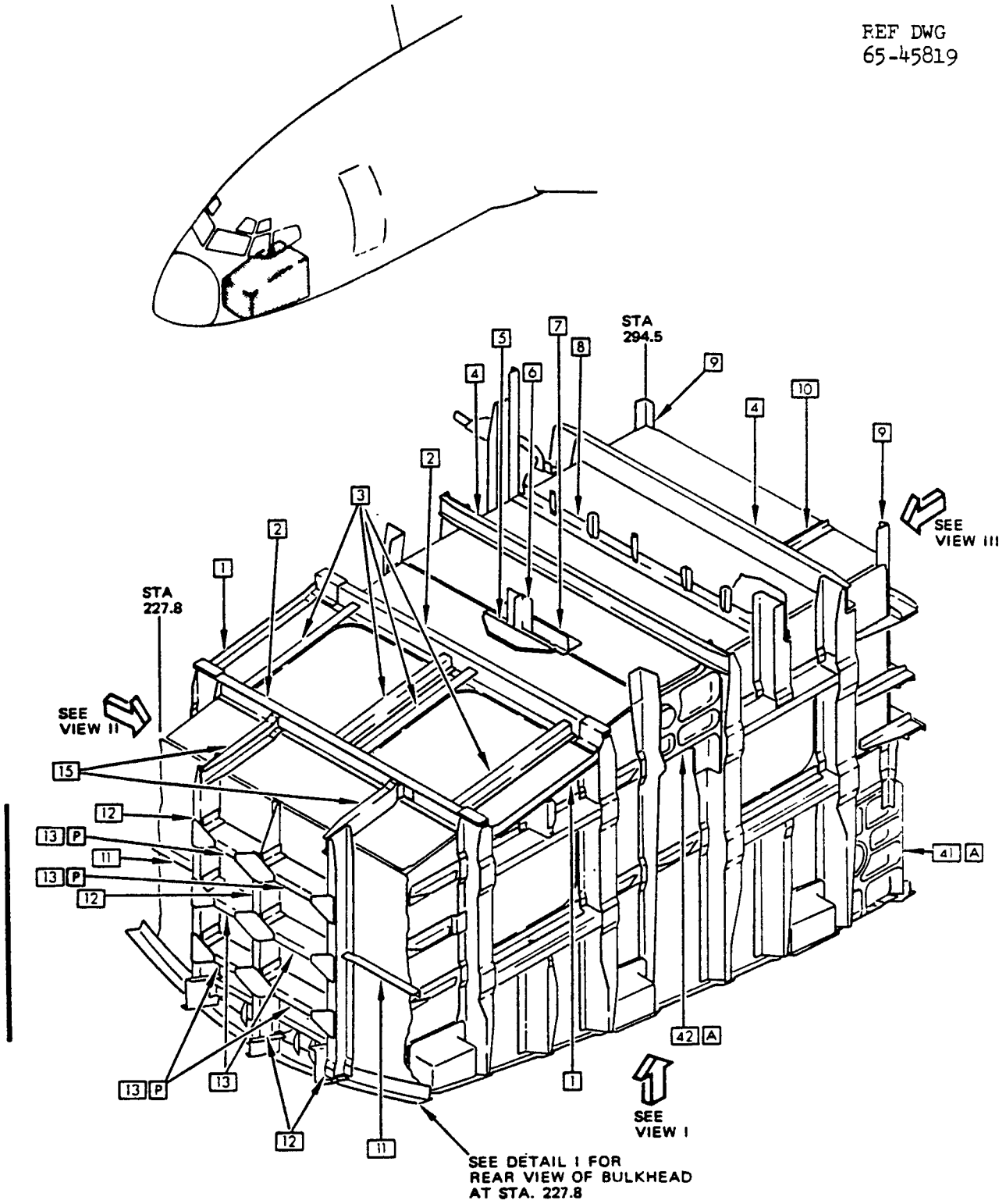

Nose Wheel Well Structure Identification
Figure 2 (Sheet 4)

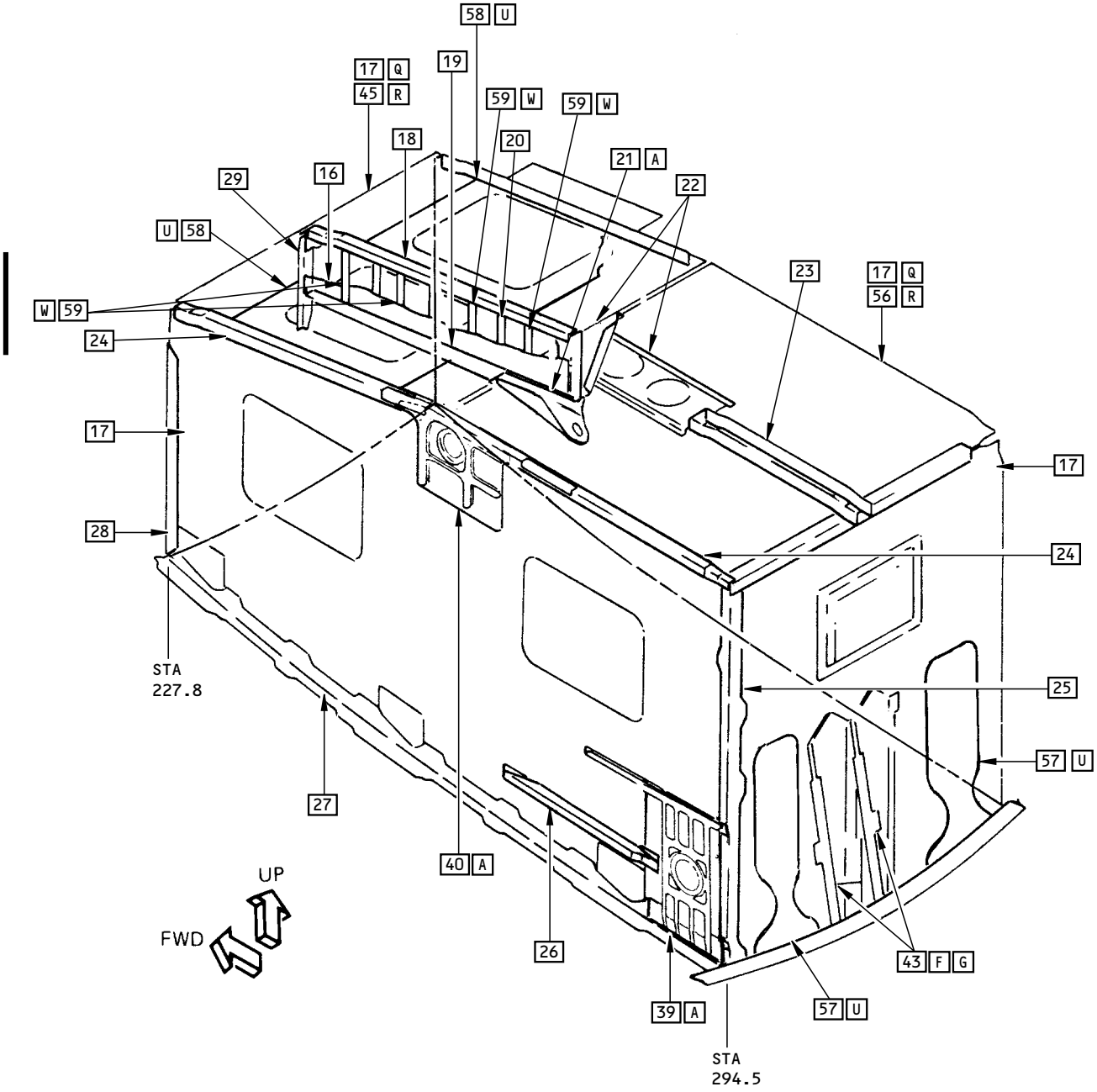

VIEW I
SHOWING INSIDE OF WHEEL WELL

Nose Wheel Well Structure Identification
Figure 2 (Sheet 5)

BOEING PROPRIETARY - Copyright © - Unpublished Work - See title page for details.

REF DWG
65-45808

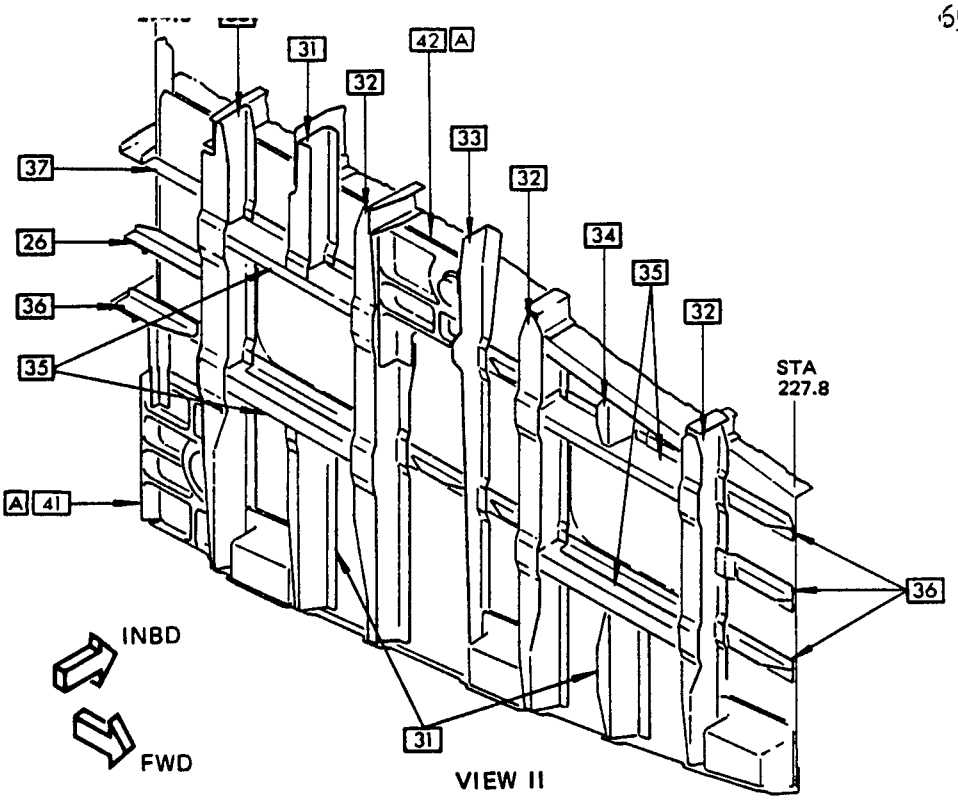

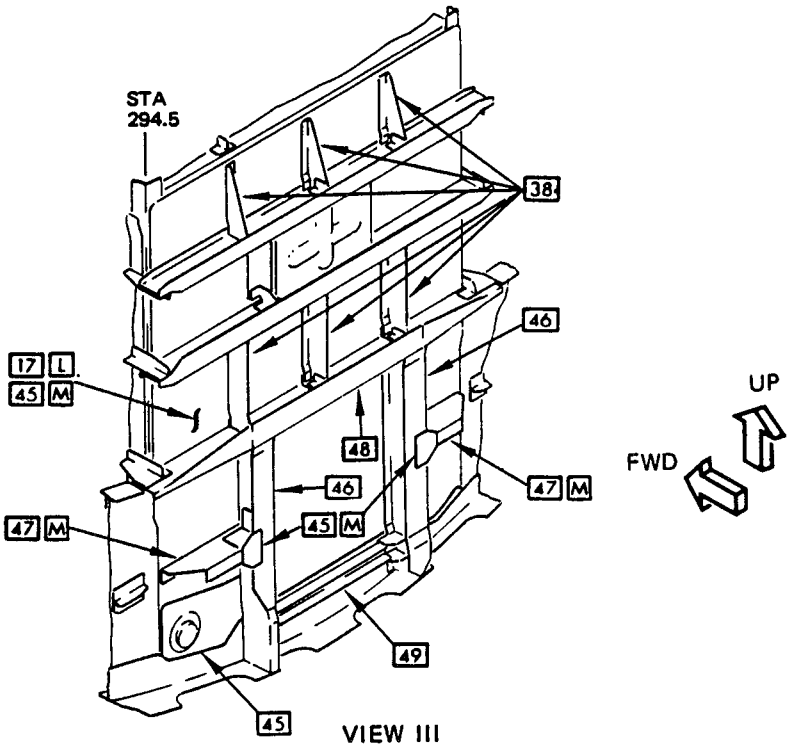

Nose Wheel Well Structure Identification
Figure 2 (Sheet 6)

REF DWG
65-45801

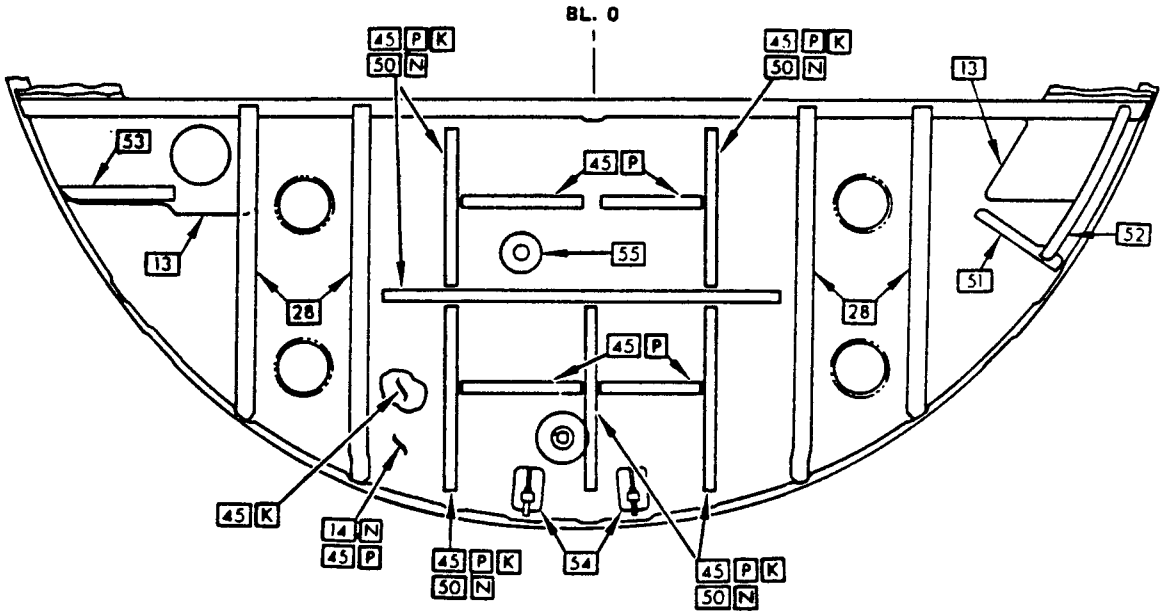

DETAIL I
REAR VIEW
LOWER BULKHEAD STA 227.8

Nose Wheel Well Structure Identification
Figure 2 (Sheet 7)

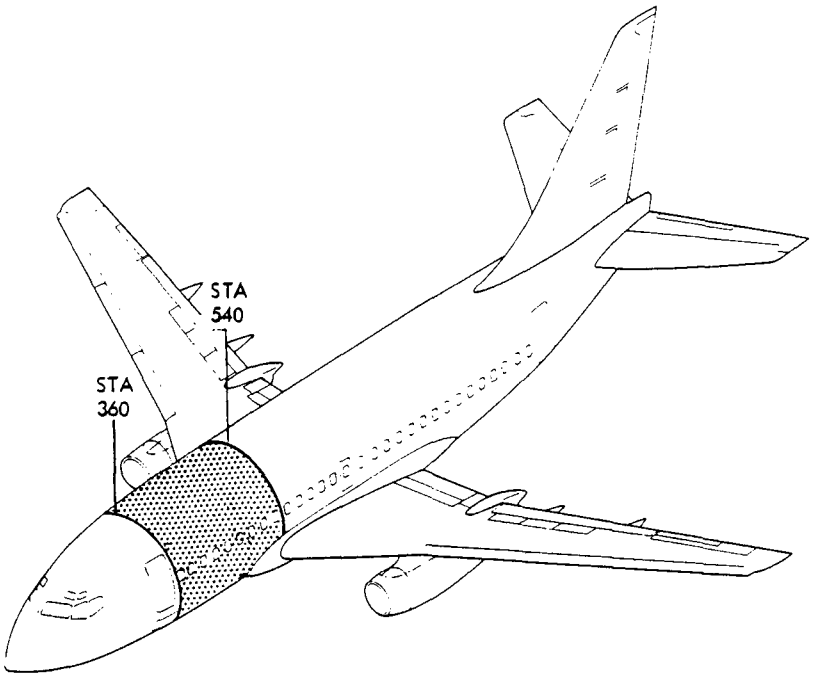

NOTES

[A] ATTACHMENT FITTING

[B] LEFT SIDE ONLY FOR CUM LINE NUMBERS:
1 THRU 89, 91 THRU 93

[C] LEFT SIDE ONLY FOR CUM LINE NUMBERS:
90, 94 AND ON

[D] RIGHT SIDE ONLY FOR CUM LINE NUMBERS:
1 THRU 75, 79, 82

[E] RIGHT SIDE ONLY FOR CUM LINE NUMBERS:
76 THRU 78, 80, 81, 83 AND ON

[F] FOR CUM LINE NUMBERS:
1 THRU 509

[G] FOR CUM LINE NUMBERS:
510 AND ON

[H] FOR BOEING REF NUMBERS:
P4168-P4399

[J] FOR BOEING REF NUMBERS:
P4159-P4399

[K] FOR CUM LINE NUMBERS:
1 THRU 509 WITH
SB 53-1051 INCORPORATED

[L] SEE 53-10-4 SERVICE BULLETIN REPAIR LIST FOR OTHER REPAIRS

[M] FOR CUM LINE NUMBERS:
1 THRU 945, EXCLUDING CARGO AIRPLANES, WITH SB 53-1069 INCORPORATED

Section 43 Structure Identification
Figure 3 (Sheet 1)

ITEM	INBOARD CHORD MATERIAL	INBOARD CHORD REPAIR FIG. NO.	WEB OR FORMED SECTION MATERIAL	WEB OR FORMED SECTION REPAIR FIG. NO.	OUTBOARD CHORD MATERIAL	OUTBOARD CHORD REPAIR FIG. NO.
1			BAC1517-1470 7075-T6 CLAD	51-40-3 Fig. 1		
2			.045 7075-T6 CLAD	51-40-3 Fig. 1	BAC1490-2808 7075-T6 CLAD	51-40-3 Fig. 1
3			.045 7075-T6 CLAD	51-40-3 Fig. 1	BAC1490-2808 7075-T6 CLAD	51-40-3 Fig. 1
4			.050 7075-T6 CLAD	51-40-3 Fig. 1	BAC1490-2808 7075-T6 CLAD	51-40-3 Fig. 1
5			.050 7075-T6 CLAD			
6			.056 7075-T6 CLAD	51-40-3 Fig. 1 L		
7			BAC1518-398 7075-T6 CLAD	51-40-4		
8			7079-T611 A FORGING			
9			.040 7075-T6 CLAD		BAC1490-2706 7075-T6 CLAD	
10	BAC1493-580 7075-T6 CLAD	51-40-3 Fig. 1	.045 7075-T6 CLAD	51-40-2 Fig. 1	AND10136-2006 2024-T3511	51-40-4
11					BAC1514-1537 2024-T42	51-40-4
12			7075-T73 FORGING			
13			BAC1509-100269 7075-T73	54-40-4		
14			.056 WEB + .056 DOUBLER CLAD 7075-T6	51-40-3 Fig. 1	BAC1490-2736 CLAD 7075-T6	51-40-3 Fig. 1
15			BAC1517-1062 CLAD 7075-T6	51-40-3 Fig. 1		
16			.063 CLAD 7075-T6		BAC1490-2506 CLAD 7075-T6	

Section 43-Structure Identification
Figure 3 (Sheet 2)

ITEM	INBOARD CHORD		WEB OR FORMED SECTION		OUTBOARD CHORD	
	MATERIAL	REPAIR FIG. NO.	MATERIAL	REPAIR FIG. NO.	MATERIAL	REPAIR FIG. NO.
17			.045 CLAD 7075-T6	51-40-3 Fig. 1	BAC1490-2810 7075-T6 CLAD	51-40-3 Fig. 1
18			.040 CLAD 7075-T6	51-40-3 Fig. 1	BAC1490-2807 7075-T6	51-40-3 Fig. 1
19			.050 CLAD 7075-T6	51-40-3 Fig. 1	BAC1490-2807 CLAD 7075-T6	51-40-3 Fig. 1
20	BAC1503-4206 7075-T6	51-40-4	.050 CLAD 7075-T6	51-40-3 Fig. 1	BAC1490-2763 CLAD 7075-T6	51-40-3 Fig. 1
			BAC1505-100038 7075-T6	SHEAR TIE		
21			.056 CLAD 7075-T6		BAC1490-2763 CLAD 7075-T6	
			BAC1511-645 7075-T6511 RADIUS FILLER			
22			BAC1506-856 7075-T6	51-40-4		
			BAC1505-100038 7075-T6	SHEAR TIE		
23			.05 CLAD 7075-T6	51-40-3 Fig. 1	BAC1490-2530 CLAD 7075-T6	51-40-4
24	AND10134-1407 EXTR 7075-T6	51-40-4	.045 WEB + .045 DOUBLER CLAD 7075-T6	51-40-3 Fig. 1	BAC1490-2763 CLAD 7075-T6	51-40-4
25			BAC1517-1062 CLAD 7075-T6 + BAC1511-645 7075-T6511 RADIUS FILLER			
26			.050 CLAD 7075-T6	51-40-3 Fig. 1	BAC1490-2506 CLAD 7075-T6	51-40-3 Fig. 1
27			.045 CLAD 7075-T6	51-40-3 Fig. 1	BAC1490-2506 CLAD 7075-T6	51-40-3 Fig. 1

Section 43 - Structure Identification
Figure 3 (Sheet 3)

ITEM	INBOARD CHORD		WEB OR FORMED SECTION		OUTBOARD CHORD	
	MATERIAL	REPAIR FIG. NO.	MATERIAL	REPAIR FIG. NO.	MATERIAL	REPAIR FIG. NO.
28			7075-T73 A FORGING			
29			0.063 CLAD 7075-T6			
30			0.056 CLAD 7075-T6		AND10134-1404 7075-T6	
31			0.056 CLAD 7075-T6		AND10134-1206 7075-T6	
32	BAC1506-2036 EXTR 2024-T3511	51-40-4	0.050 CLAD 2024-T3	51-40-2 FIG. 1	BAC1503-100300 EXTR 2024-T3511	51-40-4
33	BAC1506-2036 EXTR 2024-T3511	51-40-4	0.050 CLAD 2024-T3	51-40-2 FIG. 1	BAC1506-2036 EXTR 2024-T3511	51-40-4
34			BAC1517-1470 CLAD 7075-T6			
35			0.040 CLAD 7075-T6			
36	AND10136-2404 7075-T6	51-40-4	0.080 CLAD 7075-T6	51-40-3 FIG. 1		
37					AND10134-1407 7075-T6	51-40-4
38					AND10134-1407 7075-T6	
39	AND10134-1407 7075-T6	51-40-4	0.045 FRAME + 0.050 WEB CLAD 7075-T6	51-40-3 FIG. 1		
40			0.045 CLAD 7075-T6	51-40-3 FIG. 1	0.080 CLAD 7075-T6	51-40-3 FIG. 1
41	0.112 CLAD 7075-T6	51-40-4				

Section 43 - Structure Identification
Figure 3 (Sheet 4)

BOEING PROPRIETARY - Copyright © - Unpublished Work - See title page for details.

ITEM	INBOARD CHORD MATERIAL	INBOARD CHORD REPAIR FIG. NO.	WEB OR FORMED SECTION MATERIAL	WEB OR FORMED SECTION REPAIR FIG. NO.	OUTBOARD CHORD MATERIAL	OUTBOARD CHORD REPAIR FIG. NO.
42			0.071 CLAD 7075-T6	51-40-3 Fig. 1		
43			ANGLE BAC1490-2808 CLAD 7075-T6			
44			ANGLE 0.040 CLAD 7075-T6			
46	DOUBLER FRAME 0.071 CLAD 7075-T6					
47			TEE BAC1505-100596 7075-T6			
48					DOUBLER FRAME 0.071 CLAD 7075-T6	

Section 43-Structure Identification
Figure 3 (Sheet 4A)

EFFECTIVITY
737-100, 737-200 AIRPLANES

REF DWG
65-73743

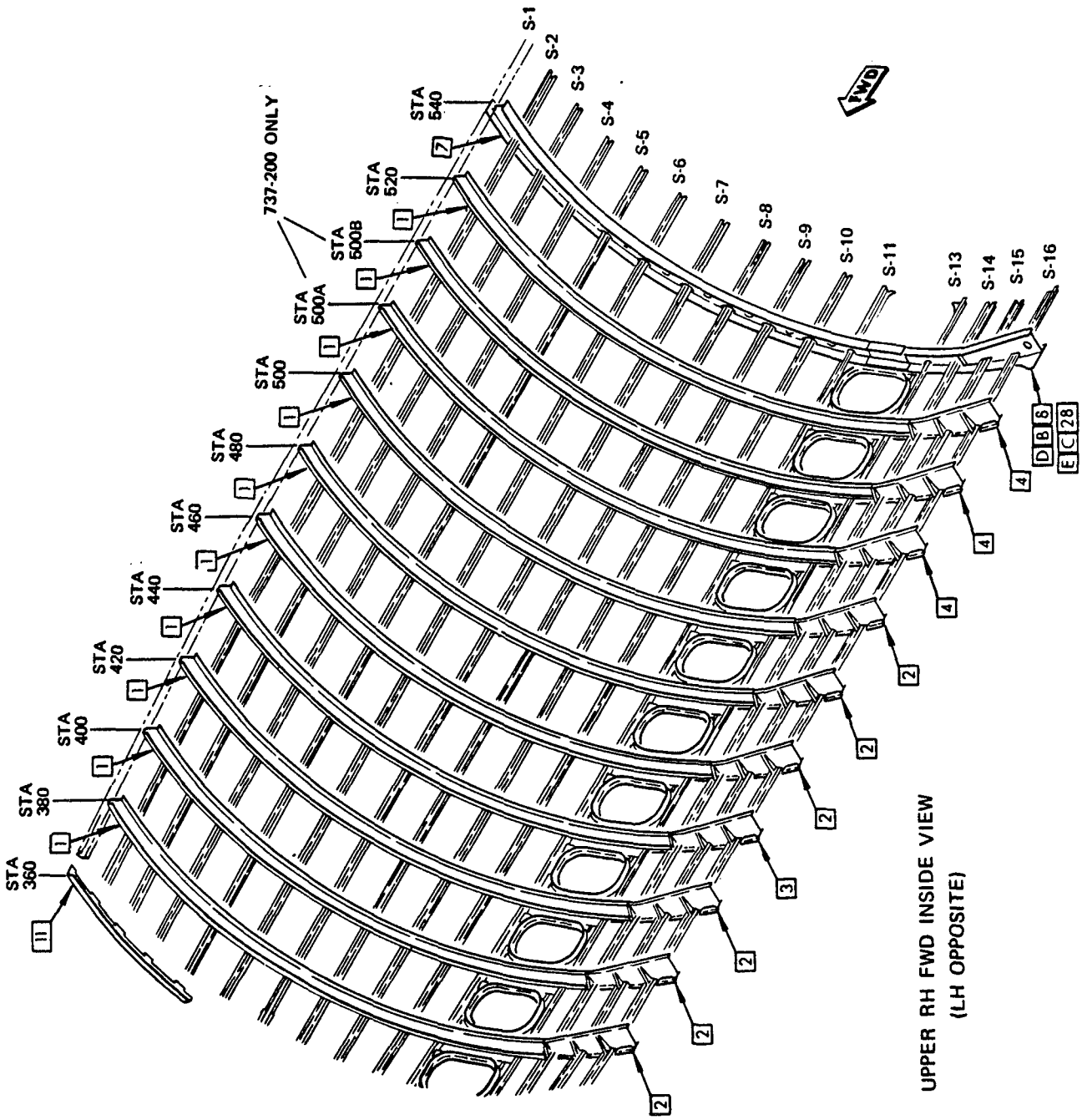

REF DWG
65-73743

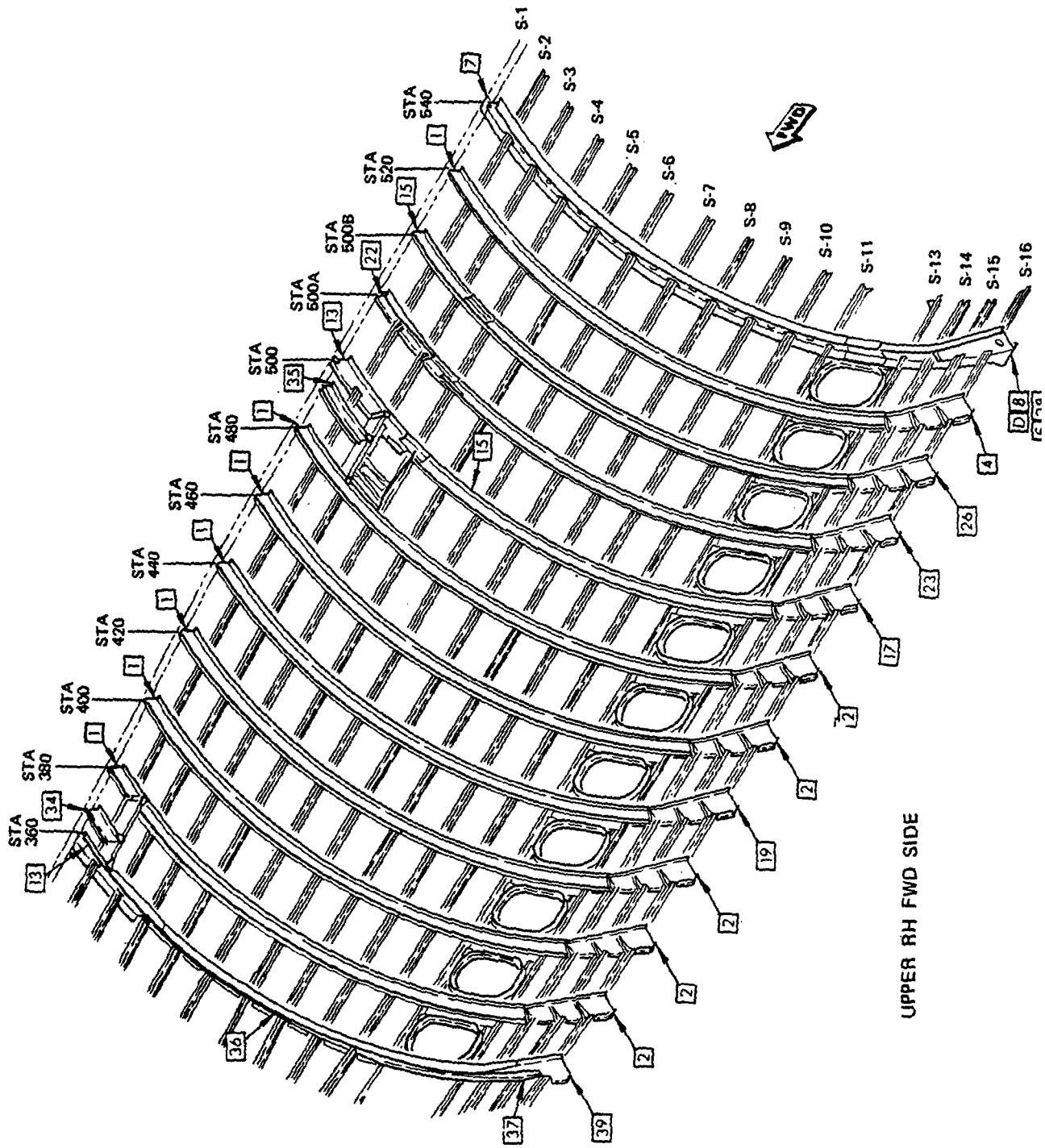

EFFECTIVITY

737-200C AIRPLANES

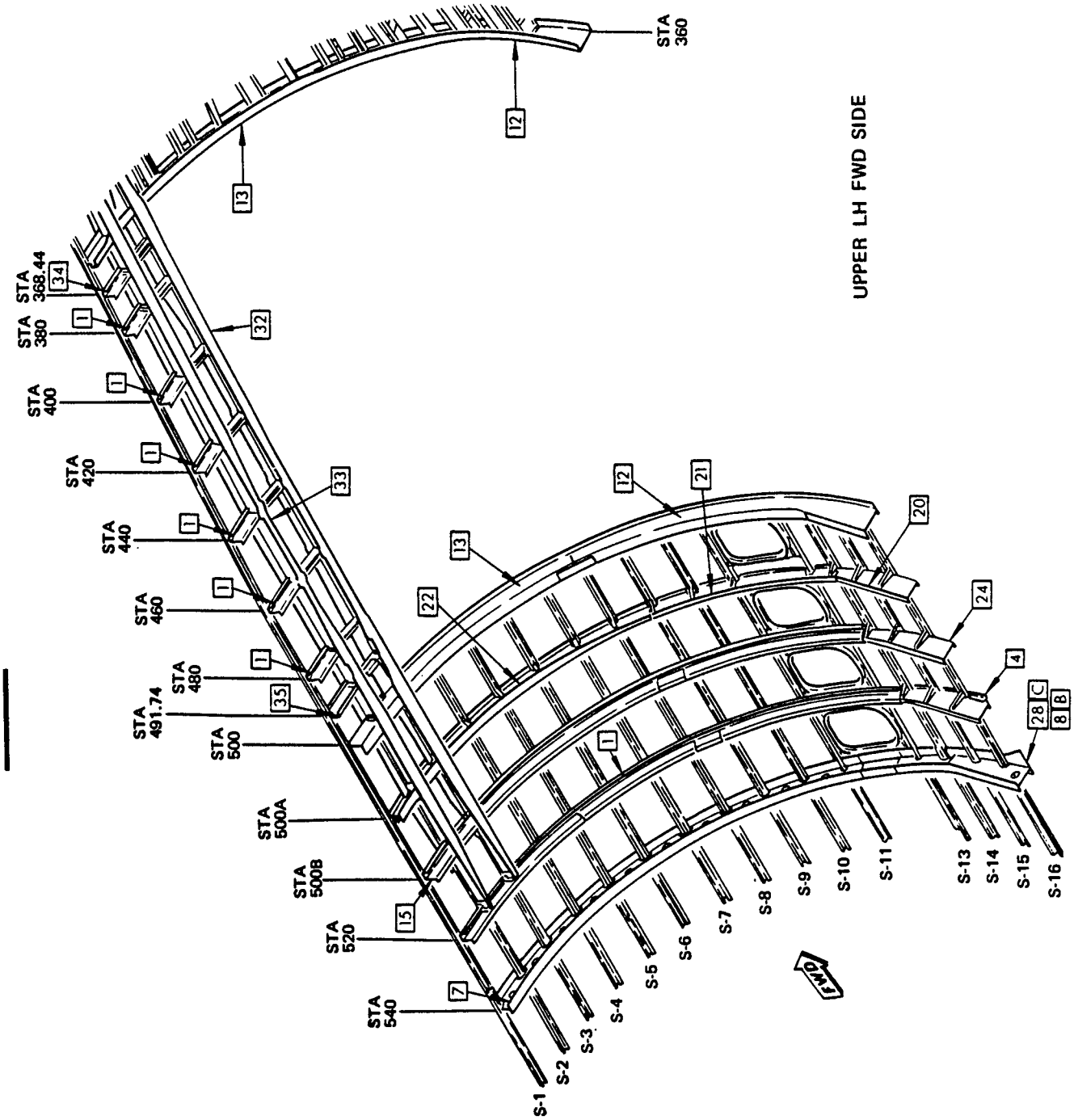

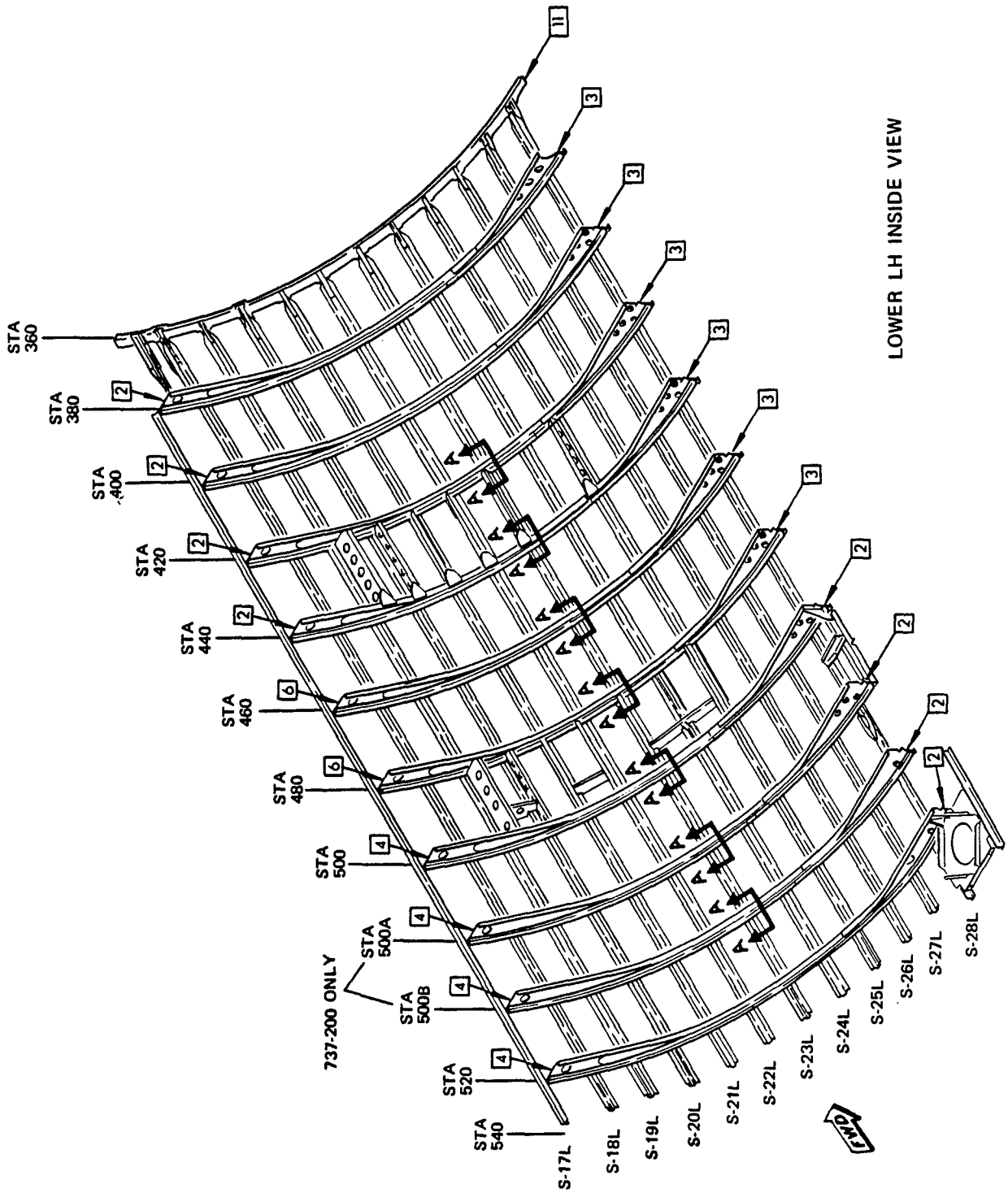
LOWER LH INSIDE VIEW
STA 360
STA 380
STA 400
STA 420
STA 440
STA 460
STA 480
STA 500
STA 500A
STA 500B
737-200 ONLY
STA 520
STA 540
S-17L
S-18L
S-19L
S-20L
S-21L
S-22L
S-23L
S-24L
S-25L
S-26L
S-27L
S-28L
FWD
11
3
2
6
4

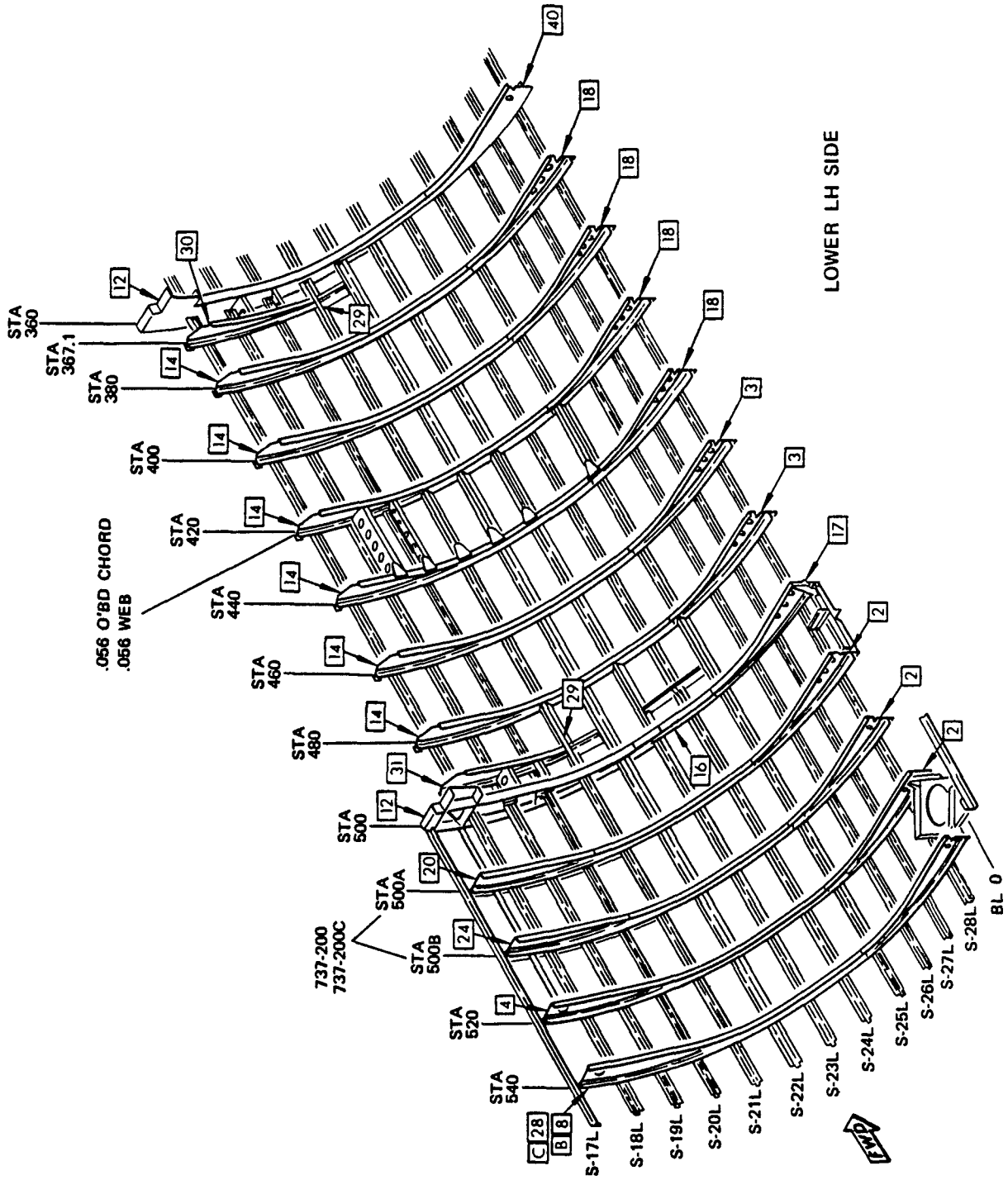
LOWER LH SIDE
STA 360
STA 367.1
STA 380
STA 400
STA 420
STA 440
STA 460
STA 480
STA 500
STA 500A
STA 500B
STA 520
STA 540
737-200
737-200C
.056 O'BD CHORD
.056 WEB
S-17L
S-18L
S-19L
S-20L
S-21L
S-22L
S-23L
S-24L
S-25L
S-26L
S-27L
S-28L
BL 0
FWD

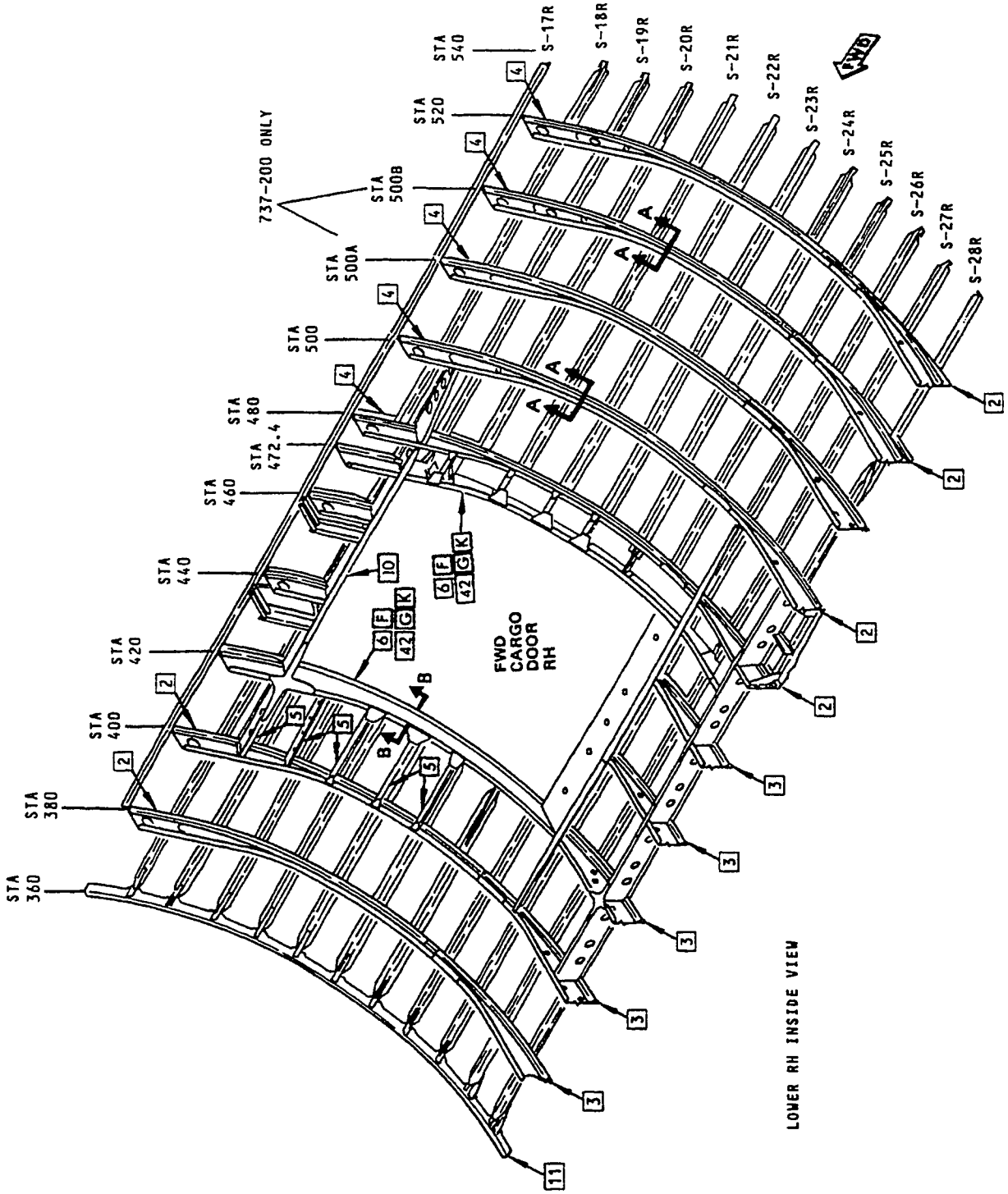

Section 43 - Structure Identification
Figure 3 (Sheet 10)

EFFECTIVITY

737-200,
737-200C AIRPLANES

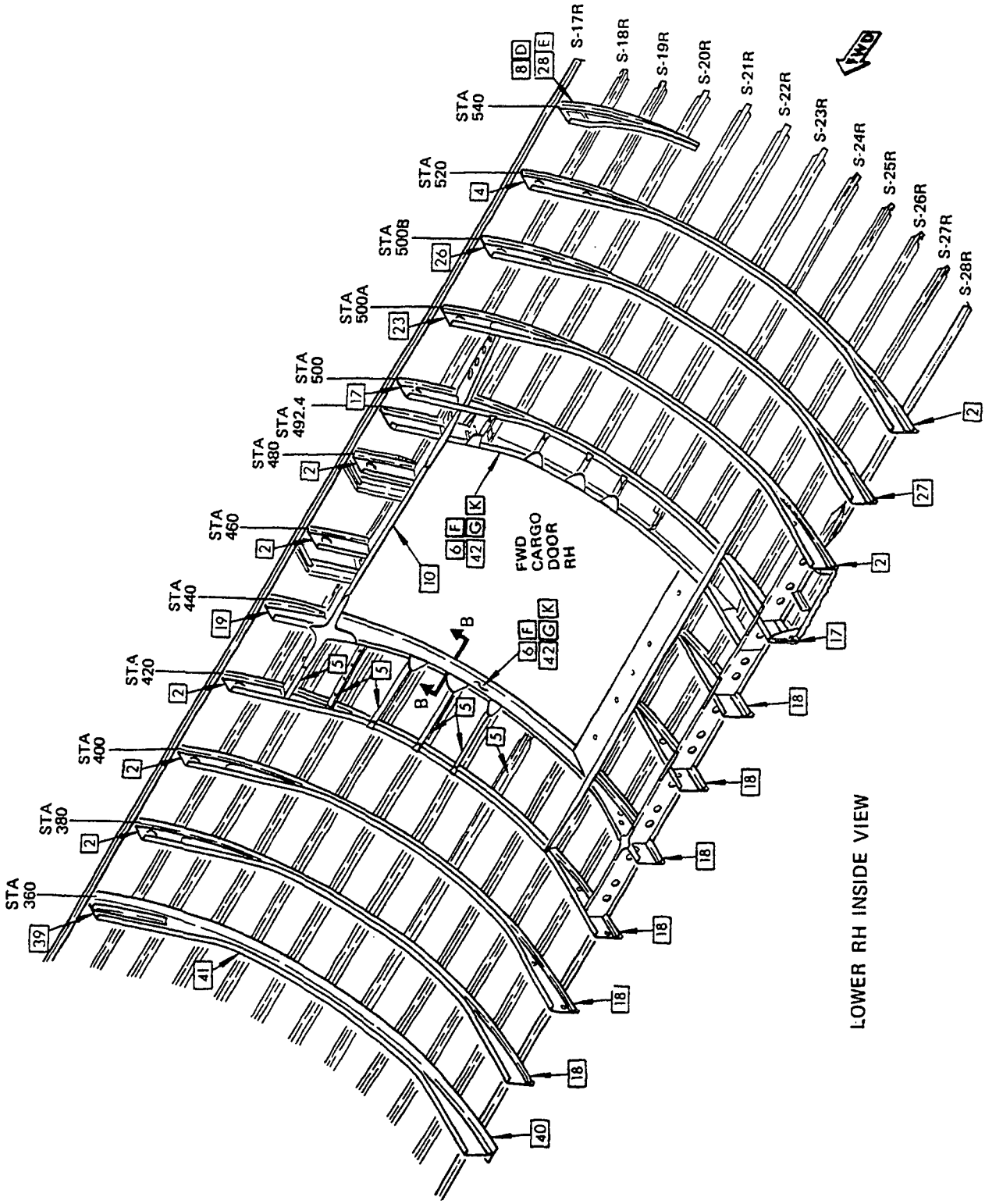

Section 43 - Structure Identification
Figure 3 (Sheet 11)

C07333

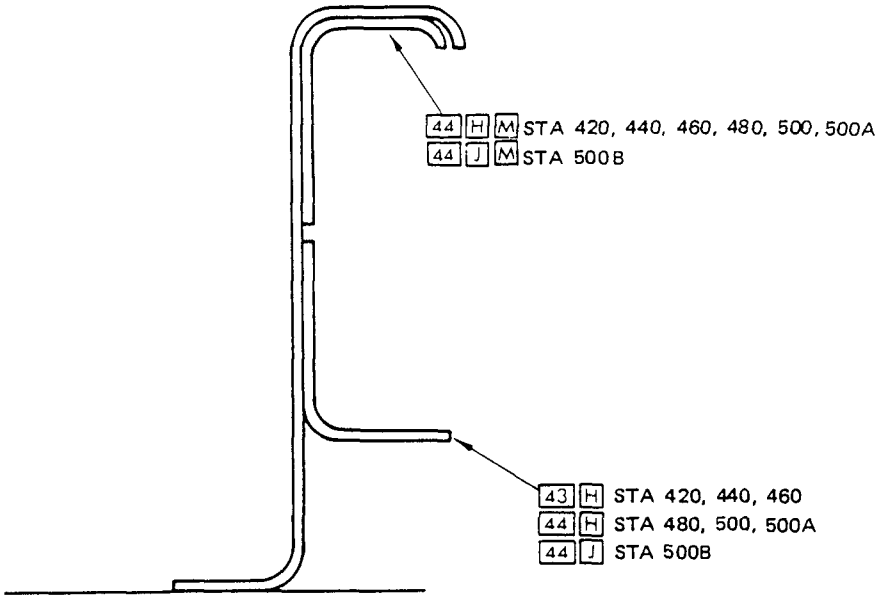

SECTION A–A

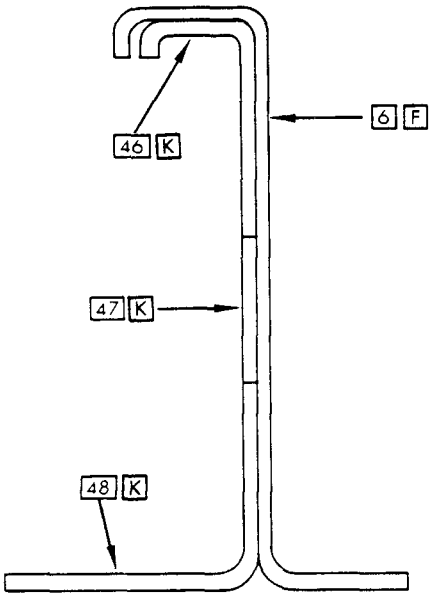

FWD FRAME SHOWN
(AFT FRAME OPPOSITE)

SECTION B–B

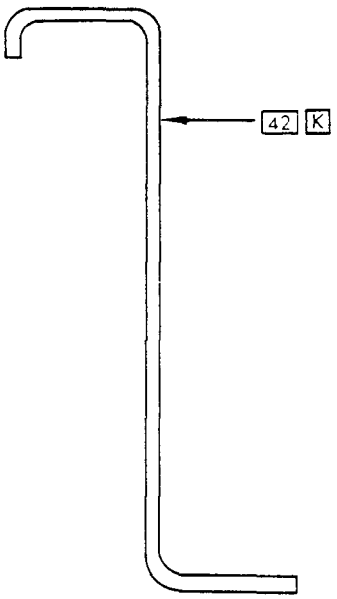

FWD FRAME SHOWN
(AFT FRAME OPPOSITE)
PREFERRED MODIFICATION
FROM SB 53-1051

ITEM	MATERIAL	REPAIR FIG. NO.
1	BAC1506-1788 7178-T6511	
2	BAC1505-100364 7075-T6	
3	0.080 CLAD SHT 7075-T6	
4	0.036 + 0.036 CLAD SHT 7075-T6 [A]	
5	BAC1517-1490 7075-T6	
6	GLASS FABRIC REINFORCED EPOXY LAMINATE	51-40-9 Fig. 1
7	BAC1506-2002 7178-T6511	
8	BAC1506-2001 7178-T6511	
9	BAC1517-1486 7075-T6	
10	0.071 CLAD 7075-T6	
11	0.032 CLAD 7050-T6	
12	0.040 CLAD 7075-T6	
13	0.063 CLAD 7075-T6	
14	0.050 + 0.050 CLAD 7075-T6 [A]	
15	AND10134-2401 7075-T6511	

ITEM	MATERIAL	REPAIR FIG. NO.
16	AND10133-1001 7075-T6511	
17	AND10134-1005 7075-T6511	
18	AND10134-1001 7075-T6511	
19	AND10135-1002 7075-T6511	
20	AND10135-1005 7075-T6511	
21	BAC1503-100236 7075-T6511	
22	BAC1505-100322 7075-T6511	
23	AND10134-2001 7075-T6511	
24	BAC1506-1745 7075-T6511	
25	AND10136-2402 7075-T6511	
26	AND10136-2003 7075-T6511	
27	MACHINED FROM 0.20 CLAD OR BARE 7075-T6	53-10-6 Fig. 1
28	0.036 CLAD 7075-T6	
29	0.050 CLAD 7075-T6	
30	AND10134-1205 7075-T6511	

Keel Beam and Wing Center Section Support - Structure Identification
Figure 4 (Sheet 1)

ITEM	MATERIAL	REPAIR FIG. NO.
31	0.125 7075-T6	
32	0.25 7075-T6	
33	BAC1506-1789 7178-T6511	
34	0.020 + 0.025 + 0.020 CLAD 7075-T6 [A]	
35	BAC1490-2631 7075-T6	
36	BAC1517-1486 CLAD 7075-T6	
37	BAC1505-29222 7075-T6	
38	BAC1493-128 7178-T6511	
39	BAC1490-2506 7075-T6	
40	0.020 + 0.036 CLAD 7075-T6	
41	0.025 + 0.020 CLAD 7075-T6	
42	0.120 CLAD 7075-T6	
43	BAC1590-2572 7075-T6	
44	BAC1505-100364 7075-T6511	
45	0.025 CLAD 7075-T6	

ITEM	MATERIAL	REPAIR FIG. NO.
46	AND10136-1405 7075-T6	
47	AND10136-2004 7075-T6	
48	0.036 + 0.025 CLAD 7075-T6	
49	0.020 CLAD 7075-T6	
50	BAC1490-2734 7075-T6	
51	BAC1490-63 7075-T6	
52	0.040 + 0.036 + 0.025 7075-T6 CLAD	
53	0.040 + 0.036 CLAD 7075-T6	
54	0.160 CLAD 7075-T6	
55	BAC1490-2572 7075-T6	
56	BAC1517-1490 7075-T6	
57	0.036 + 0.025 + 0.025 + 0.020 CLAD 7075-T6	
58	0.140 CLAD 7075-T6	
59	AND10136-1701 7075-T6	
60	STIFFENER 0.090 CLAD 7075-T6	

Keel Beam and Wing Center Section Support - Structure Identification
Figure 4 (Sheet 2)

ITEM	MATERIAL	REPAIR FIG. NO.
61	ANGLE 0.080 CLAD 7075-T6	
62	DOUBLER 0.125 CLAD 7075-T6	
63	STIFFENER BAC1517-1490 7075-T6	
64	STRAP 0.080 CLAD 7075-T6	
65	DOUBLER 0.080 CLAD 7075-T6	
66	FILLER 0.080 CLAD 7075-T6	
67	CHORD - MACHINED BAC1506-2001 7178-T6511	
68	SPLICE PLATE 0.125 CLAD 7075-T6	
69	BAC1517-1490 7075-T6511	
70	0.045 CLAD 7075-T6	
71	0.016 CLAD 7075-T6	
72	0.080 CLAD 7075-T6	
73	0.090 CLAD 7075-T6	

ITEM	MATERIAL	REPAIR FIG. NO.
74	0.112 CLAD 7075-T6	
75	BLOWOUT DOOR ASSY - ARAMID/EPOXY HONEYCOMB SANDWICH INNER SKIN - PREPREG ARAMID FABRIC PER BMS 8- 219, STYLE 285 CORE - NONMETALLIC HONEYCOMB PER BMS 8-124, TYPE V, CLASS IV, GRADE 3.0 OUTER SKIN - PREPREG ARAMID FABRIC PER BMS 8- -219, STYLE 285 WITH OUTER PLY OF PREPREG NONWOVEN KEVLAR MAT PER BMS 8-310	
76	BLOWOUT DOOR ASSY ARAMID/EPOXY HONEY- COMB SANDWICH INNER SKIN - PREPREG ARAMID PER BMS 8-219, STYLE 285 CORE - NONMETALLIC HONEYCOMB PER BMS 8-124, TYPE V, CLASS IV, GRADE 3.0 OUTER SKIN - PREPREG ARAMID FABRIC PER BMS 8- 219, STYLE 285 WITH OUTER PLY OF PREPREG GLASS FABRIC PER BMS 8- 79, TYPE 120	

Keel Beam and Wing Center Section Support - Structure Identification
Figure 4 (Sheet 3)

ITEM	MATERIAL	REPAIR FIG. NO.
77	SPLICE TEE BAC1505-39375 7075-T6511	
78	SPLICE TEE BAC1505-100644 7075-T73511	
79	SPLICE TEE BAC1505-100644 7075-T3511	

ITEM	MATERIAL	REPAIR FIG. NO.

Keel Beam and Wing Center Section Support - Structure Identification
Figure 4 (Sheet 3A)

NOTES

[A] BONDED

[B] FOR CUM LINE NUMBERS:
1 THRU 71, 73 THRU 83, 85 THRU 101, 103 THRU 109, 111 THRU 127, 129 THRU 138, 140 THRU 142, 144 THRU 148, 150 THRU 154, 156, 159 THRU 161, 163, 165, 167 THRU 172, 174 THRU 183, 185 THRU 193, 195, 197, 198, 200 THRU 202, 204, 206, 207, 209 THRU 211, 213, 214, 216, 218 THRU 222, 224, 226 THRU 229, 231 THRU 233, 235 THRU 237, 239 THRU 241, 243, 244, 246 THRU 248, 250, 252, 253, 257, 259 THRU 262, 264, 266, 267, 269 THRU 273, 275

[C] FOR CUM LINE NUMBERS:
7 THRU 11, 15, 17, 23, 26, 32 AND ON

[D] FOR CUM LINE NUMBERS:
1 THRU 50

[E] FOR CUM LINE NUMBERS:
51 AND ON

[F] FOR CUM LINE NUMBERS:
277, 279, 280, 282 THRU 285, 287, 291 THRU 293, 296, 323 THRU 327, 331, 374, 375, 380, 383

[G] FOR AIPLANES NOT LISTED IN [B], [F], AND [M]

[H] FOR CUM LINE NUMBER:
1023 AND ON

[I] FOR CUM LINE NUMBER:
1022 AND PRIOR 737-200 AIRPLANES

[J] FOR CUM LINE NUMBERS:
1 THRU 240

[K] FOR CUM LINE NUMBERS:
241 AND ON

[L] FOR AIRPLANES NOT LISTED IN [B] AND [M]

[M] FOR CUM LINE NUMBERS:
184, 194, 203, 212, 217

[N] DELETED

[O] FOR AIRPLANES WITH SB 53-1026 INCORPORATED AND FOLLOWING AIRPLANE CUM LINE NUMBERS:
258, 263, 265, 268, 274, 276, 278

[P] FOR CUM LINE NUMBERS:
295, 297 THRU 322, 328 THRU 330, 332 THRU 373, 376 THRU 379, 381, 382, 384 AND ON

[Q] FOR CUM LINE NUMBERS:
280, 282 THRU 285, 287, 291, 292

[R] FOR CUM LINE NUMBERS:
281, 288, 290

[S] FOR CUM LINE NUMBERS:
286, 289, 294

[T] DELETED

[U] FOR AIRPLANES WITH CUM LINE NUMBERS:
P4236 THRU P4345, P8971 THRU P8978

[V] FOR AIRPLANES WITH CUM LINE NUMBERS:
P4346 THRU P4399, P4801 THRU P5499, P8979 THRU P9995

[W] FOR ALL AIRPLANES NOT INCLUDED IN [U] AND [V]

Keel Beam and Wing Center Section Support - Structure Identification
Figure 4 (Sheet 4)

NOTES (CONT)

[X] FOR CUM LINE NUMBERS:
1 THRU 71, 73 THRU 83, 85 THRU 101, 103 THRU 109, 111 THRU 127, 129 THRU 138, 140 THRU 142, 144 THRU 148, 150 THRU 154, 156, 159 THRU 161, 163, 165, 167 THRU 172, 174 THRU 195, 197, 198, 200 THRU 204, 206, 207, 209 THRU 214, 216 THRU 222, 224 THRU 229, 231 THRU 233, 235 THRU 237, 239 THRU 241, 243, 244, 246 THRU 248, 250, 252, 253, 255, 257, 259 THRU 262, 264, 266, 267, 269 THRU 273, 275, 277, 279 THRU 285, 287, 288, 290 THRU 293, 296 THRU 303, 305 THRU 308, 310, 312 THRU 320, 323 THRU 332, 335 THRU 342, 351 THRU 353, 356 THRU 367, 369, 370, 372 THRU 395, 397 THRU 400, 402, 404, 406, 407, 409, 410, 412, 415 THRU 418, 420 THRU 426, 428, 431 THRU 435, 438, 440 THRU 442, 445, 448 THRU 480, 482, 483, 485, 487 THRU 512, 514, 516 THRU 519, 521 THRU 545, 547 THRU 570, 572, 574, 575, 577 THRU 579, 581 THRU 589, 591 THRU 596, 598, 599, 601, 602, 604, 606, 607, 609, 611 THRU 614, 616 THRU 636, 638 THRU 654, 656 THRU 662, 664 THRU 687, 689 THRU 746, 748 THRU 759, 761 THRU 766, 768 THRU 778, 780 THRU 812, 814 THRU 879, 881 THRU 927, 929 THRU 950, 952 THRU 974, 976 THRU 988, 990 AND AIRPLANES WITH SB 53-1138 NOT INCORPORATED.

[Y] FOR CUM LINE NUMBERS:
72, 84, 102, 139, 157, 173, 199, 208, 215, 223, 230, 234, 238, 242, 245, 249, 251, 254, 256, 258, 263, 265, 268, 274, 276, 278, 286, 289, 294, 295, 304, 309, 311, 321, 322, 333, 344 THRU 348, 354, 368, 371, 396, 401, 403, 405, 408, 411, 413, 414, 419, 427, 429, 430, 436, 437, 439, 443, 444, 446, 447, 481, 484, 486, 513, 515, 520, 546, 571, 573, 576, 580, 590, 597, 600, 603, 605, 608, 610, 615, 637, 655, 663, 688, 747, 760, 767, 779, 813, 880, 928, 951, 975, 989

[Z] FOR AIRPLANES WITH SB 53-1138 INCORPORATED

Keel Beam and Wing Center Section Support - Structure Identification
Figure 4 (Sheet 4A)

REF DWGS
65-45413
65-45866

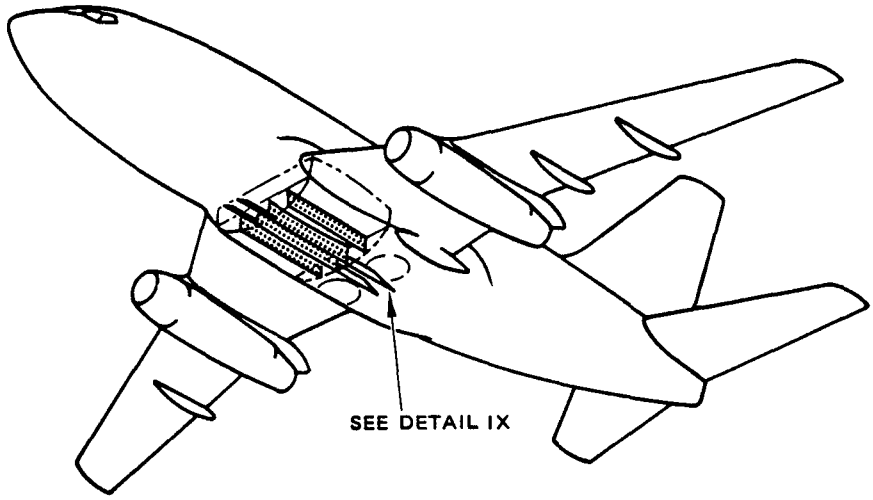

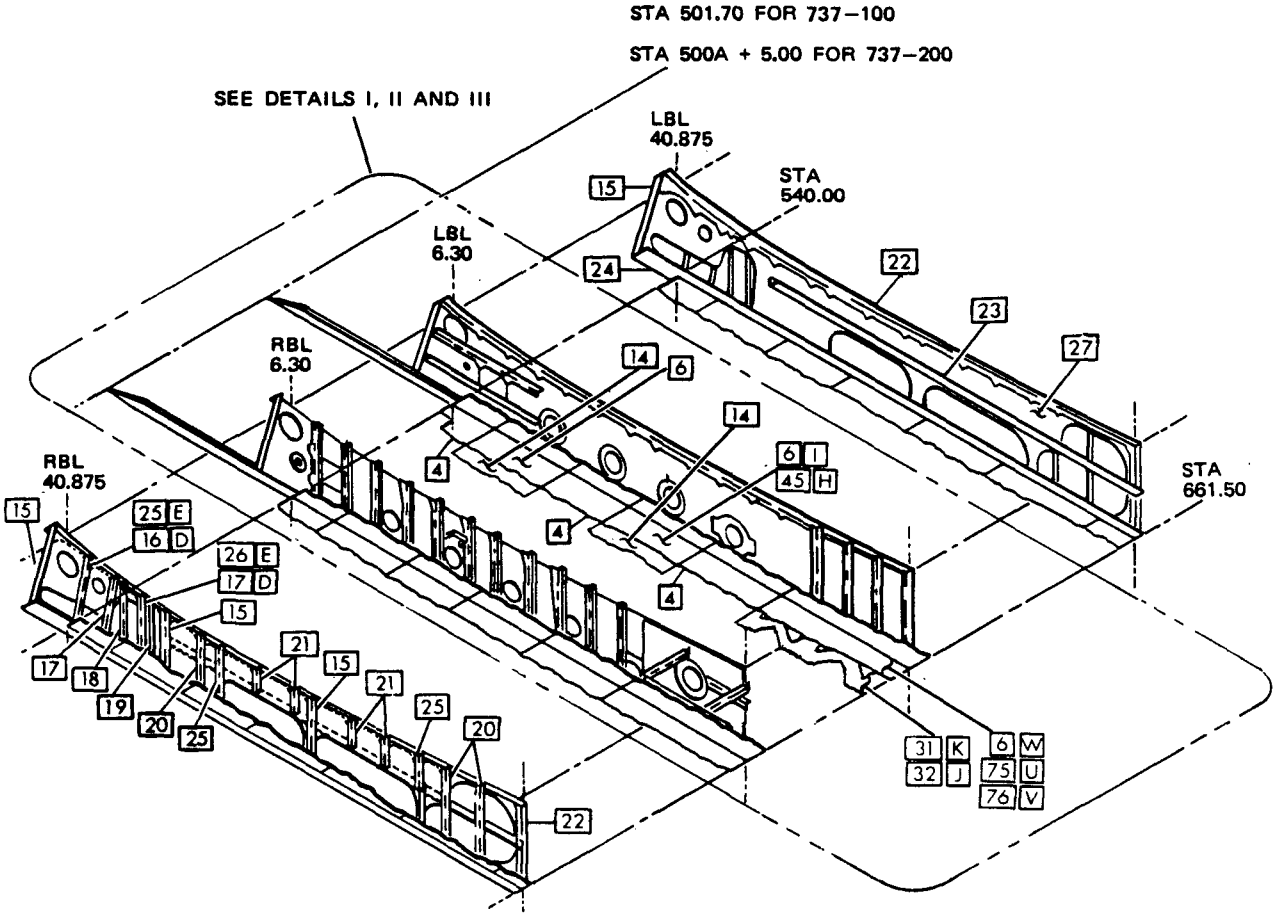

Keel Beam and Wing Center Section Support - Structure Identification
Figure 4 (Sheet 5)

REF DWG
65-45866

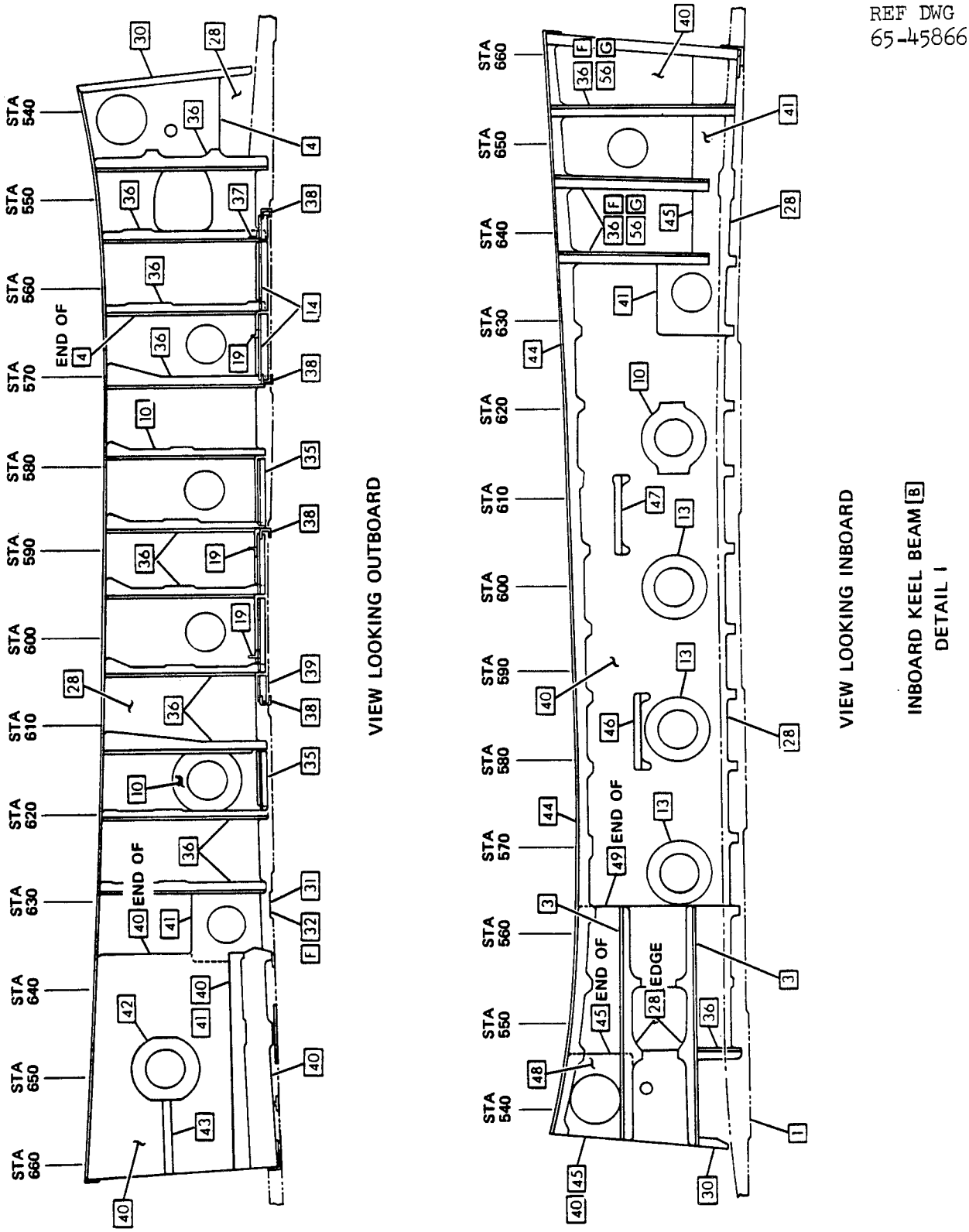

Keel Beam and Wing Center Section Support - Structure Identification
Figure 4 (Sheet 6)

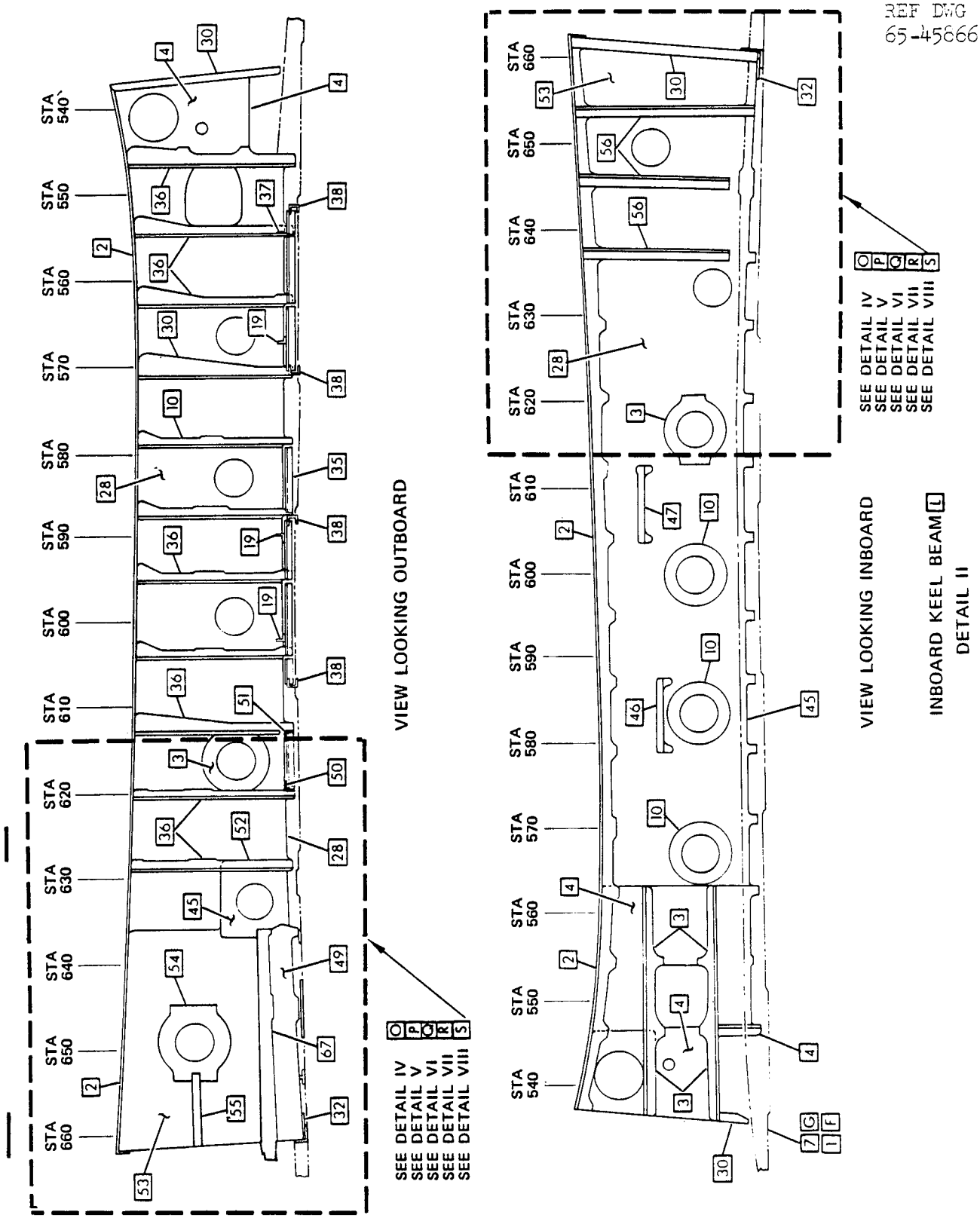

Keel Beam and Wing Center Section Support - Structure Identification
Figure 4 (Sheet 7)

REF DWG
65-45866

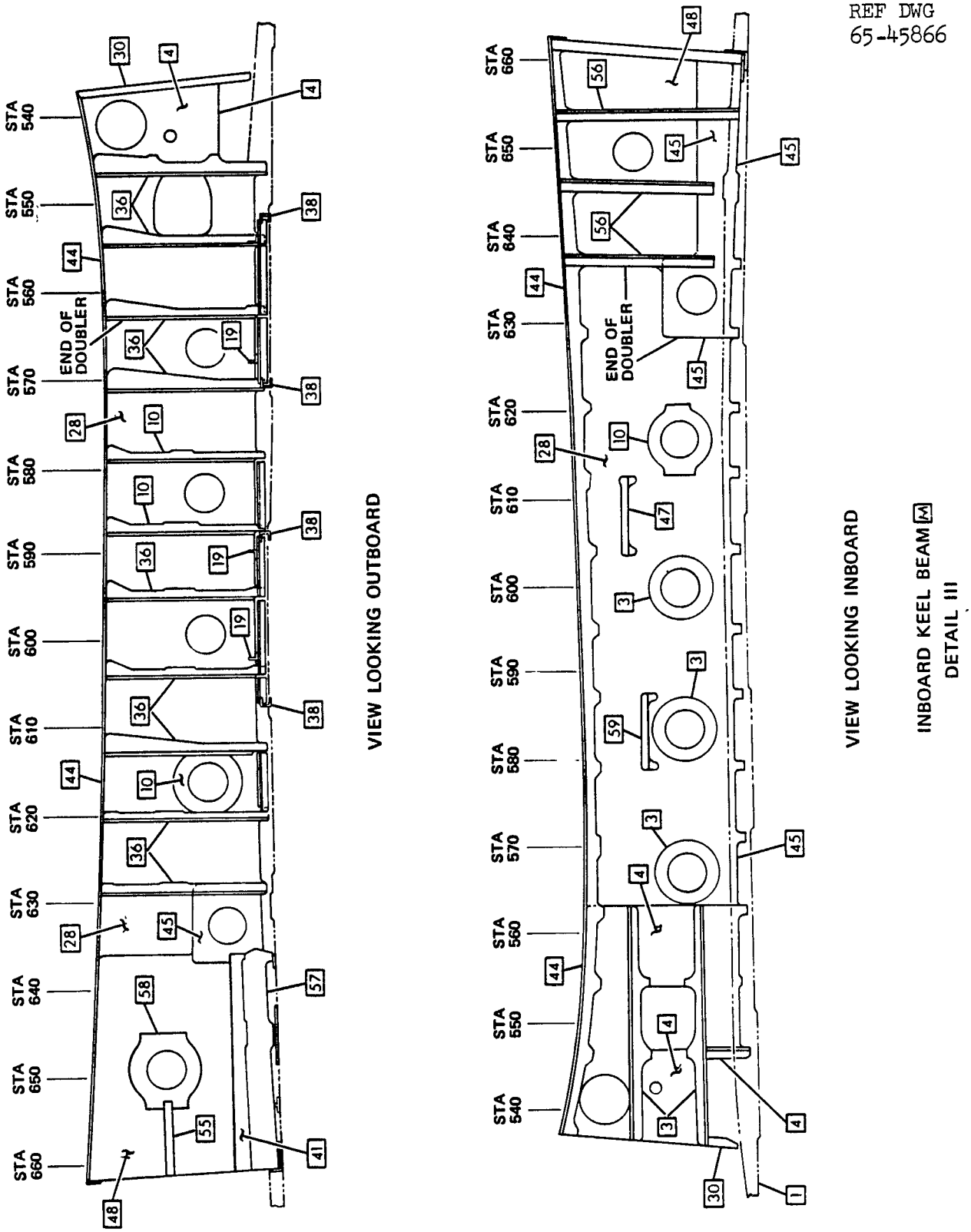

Keel Beam and Wing Center Section Support - Structure Identification
Figure 4 (Sheet 8)

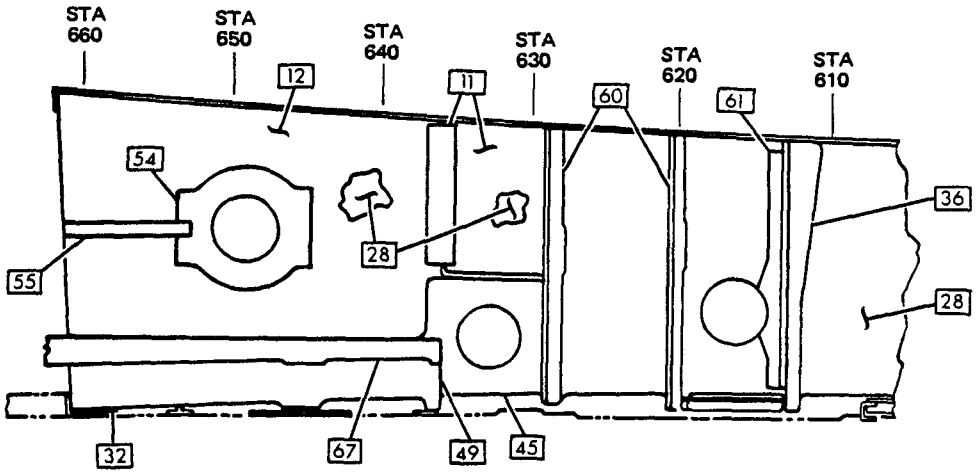

VIEW LOOKING OUTBOARD

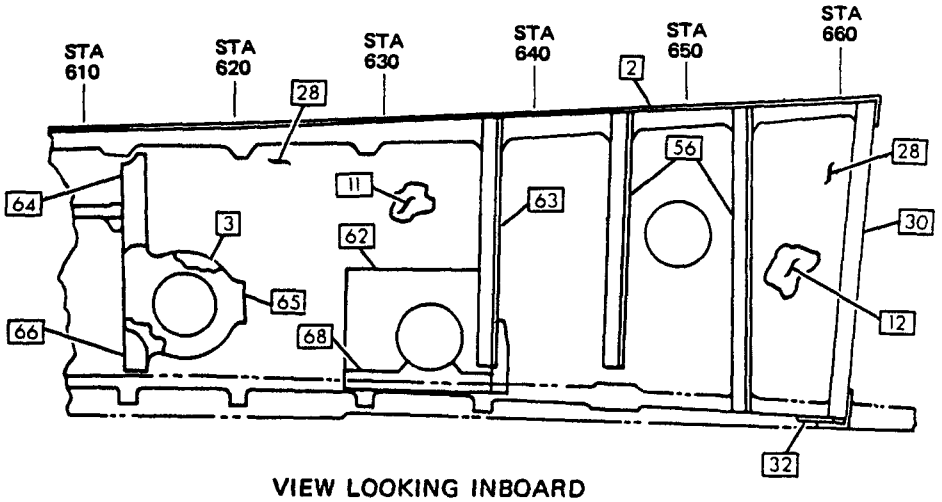

VIEW LOOKING INBOARD

INBOARD KEEL BEAM ⊡
DETAIL IV

Keel Beam and Wing Center Section Support - Structure Identification
Figure 4 (Sheet 9)

REF DWG
65-45866

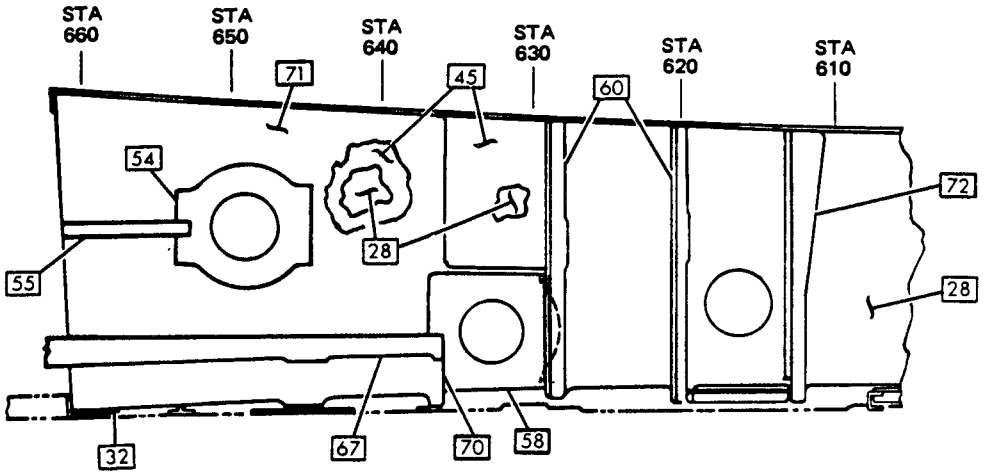

VIEW LOOKING OUTBOARD

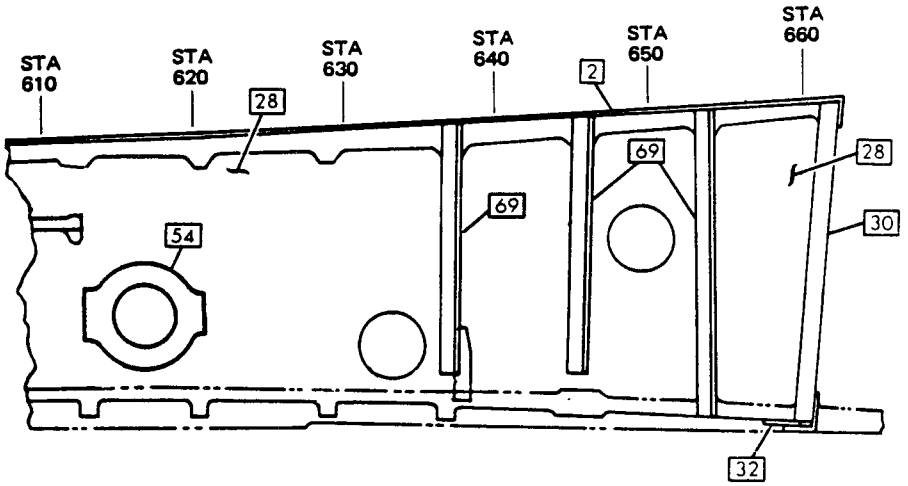

VIEW LOOKING INBOARD

INBOARD KEEL BEAM P
DETAIL V

Keel Beam and Wing Center Section Support - Structure Identification
Figure 4 (Sheet 10)

REF DWG
65-79786

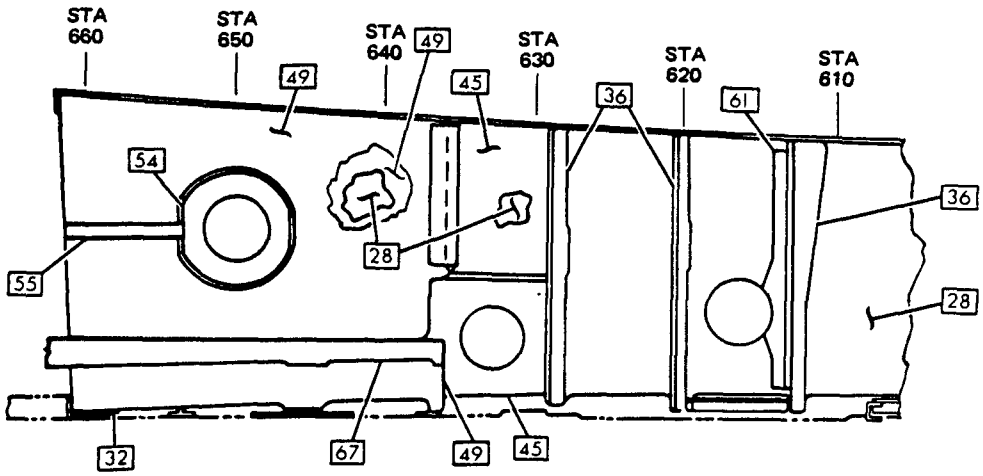

VIEW LOOKING OUTBOARD

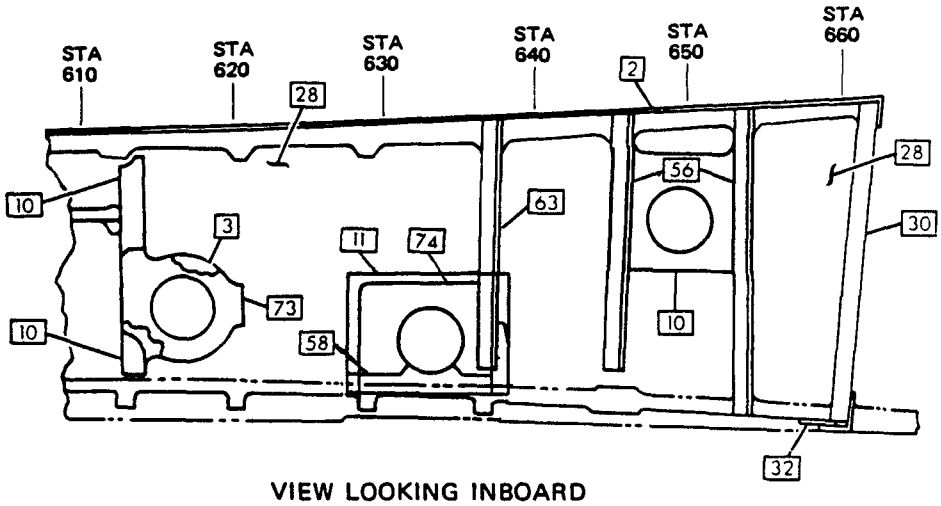

VIEW LOOKING INBOARD

INBOARD KEEL BEAM Ⓠ
DETAIL VI

Keel Beam and Wing Center Section Support - Structure Identification
Figure 4 (Sheet 11)

REF DWG
65-79786

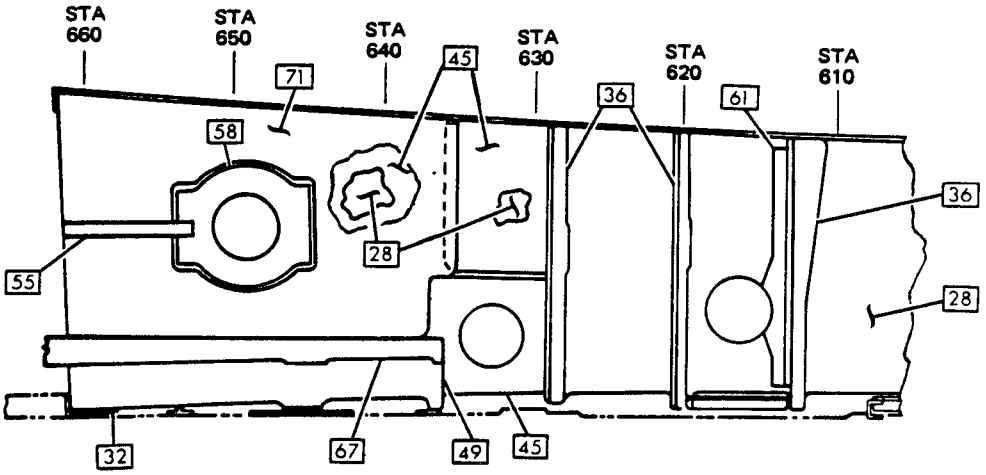

VIEW LOOKING OUTBOARD

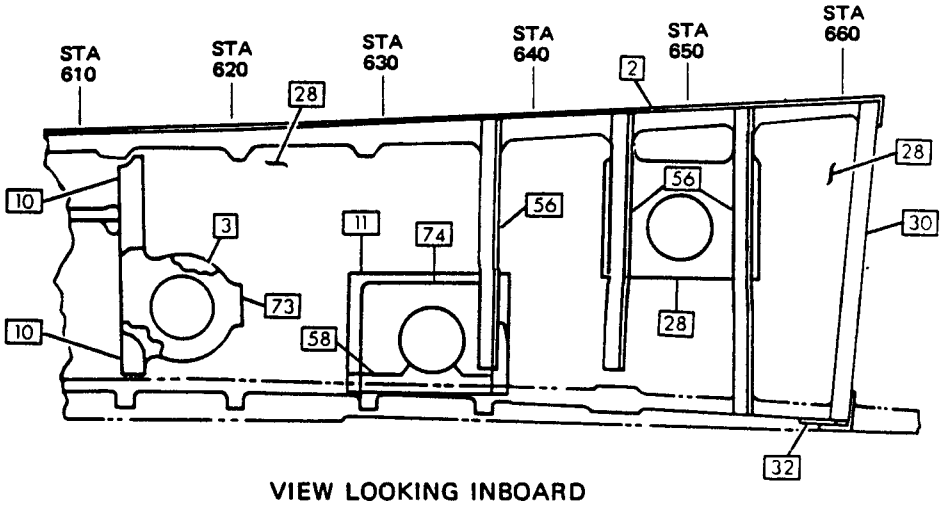

VIEW LOOKING INBOARD

INBOARD KEEL BEAM R
DETAIL VII

Keel Beam and Wing Center Section Support - Structure Identification
Figure 4 (Sheet 12)

REF DWG
65-79786

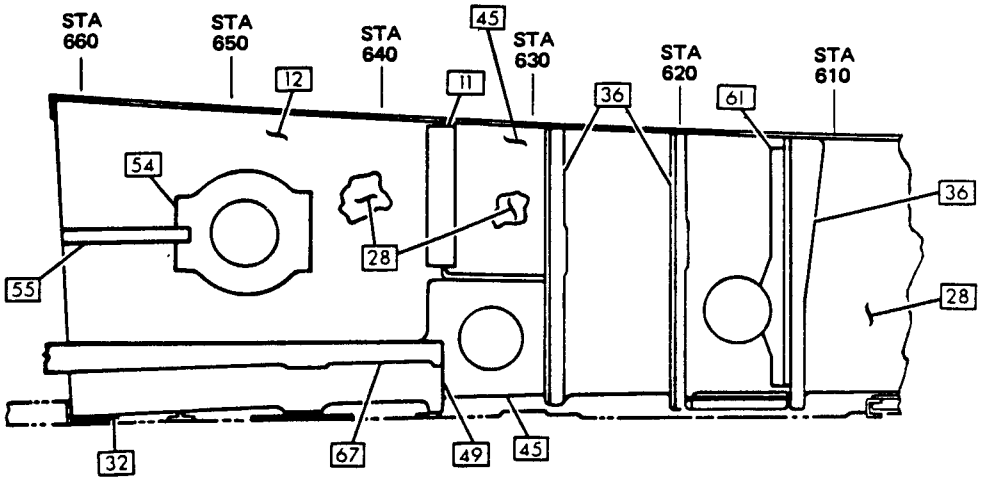

VIEW LOOKING OUTBOARD

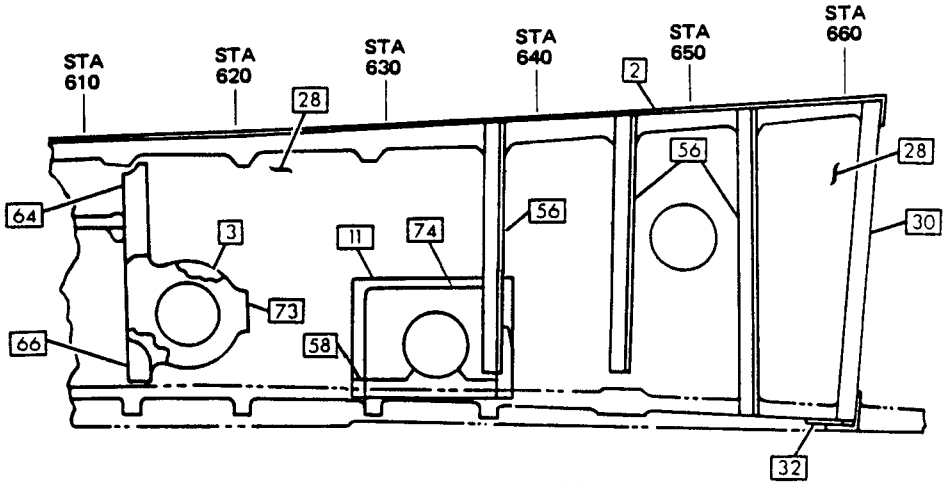

VIEW LOOKING INBOARD

INBOARD KEEL BEAM [S]
DETAIL VIII

Keel Beam and Wing Center Section Support - Structure Identification
Figure 4 (Sheet 13)

REF DWG
65-45866

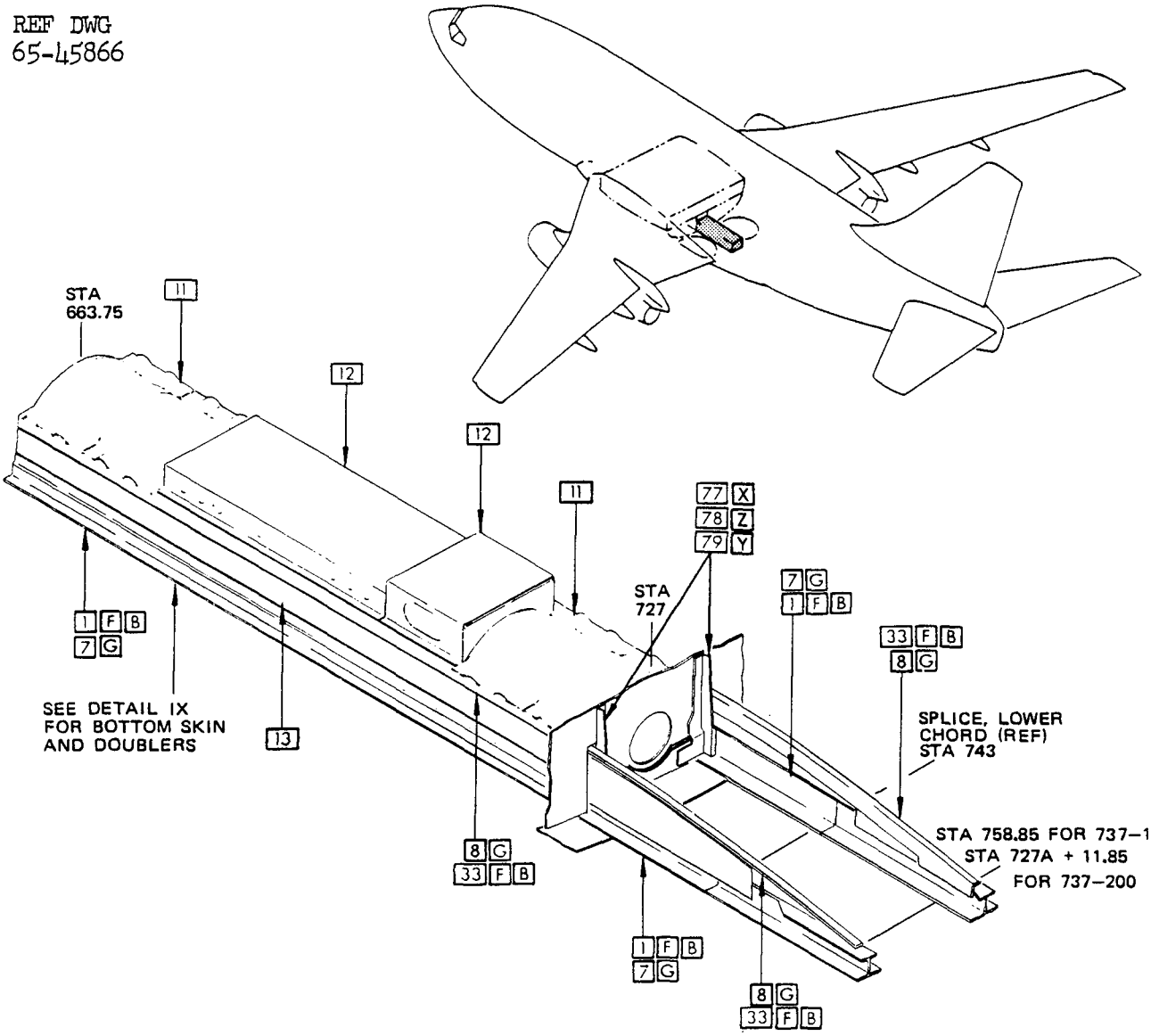

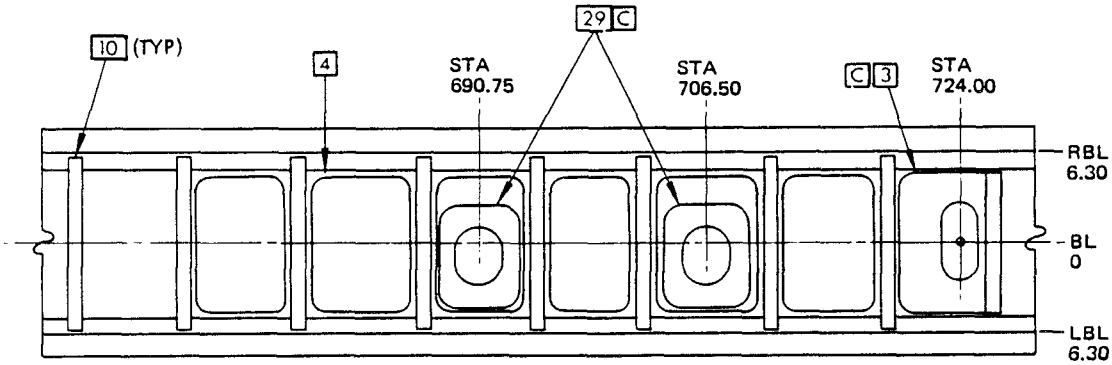

PLAN VIEW OF BOTTOM SKIN AND DOUBLERS

DETAIL IX

Keel Beam and Wing Center Section Support - Structure Identification
Figure 4 (Sheet 14)

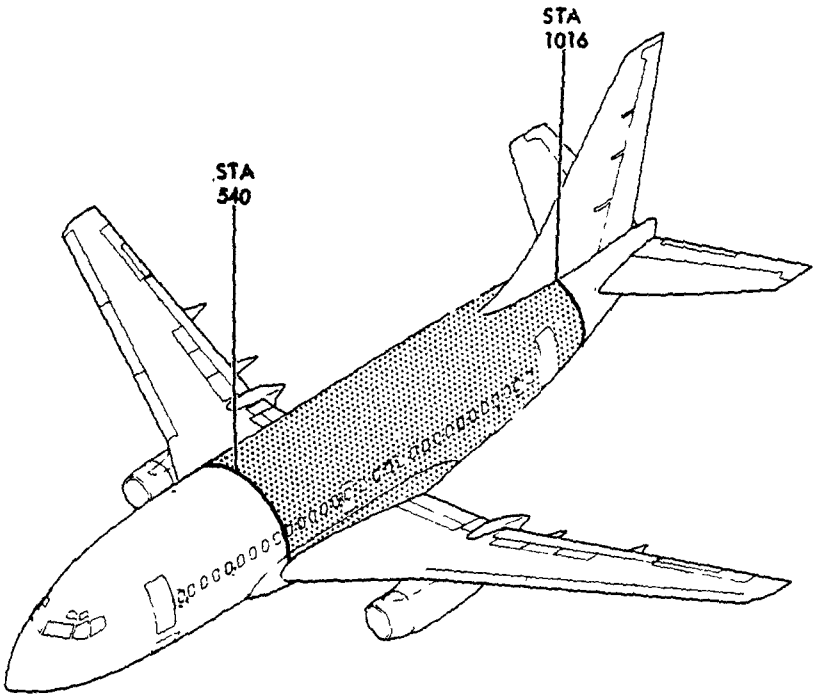

ITEM	UPPER CHORD		WEB OR FORMED SECTION		LOWER CHORD	
	MATERIAL	REPAIR FIG. NO.	MATERIAL	REPAIR FIG. NO.	MATERIAL	REPAIR FIG. NO.
1			BAC1517-705 7075-T6 CLAD			
2			.050 7075-T6 CLAD		BAC1490-2506 7075-T6 CLAD	
3			.071 7075-T6 CLAD		BAC1490-2506 7075-T6 CLAD	
4	BAC1514-447 7075-T6				BAC1514-1087 7075-T6	
5			.063 2024-T3 CLAD		BAC1514-1087 7075-T6	
6			BAC1509-100239 7075-T6			
7			BAC1517-706 7075-T6 CLAD			
8			BAC1495-70 7075-T6 CLAD			

Section 46 - Structure Identification
Figure 5 (Sheet 1)

ITEM	INBOARD CHORD		WEB OR FORMED SECTION		OUTBOARD CHORD	
	MATERIAL	REPAIR FIG. NO.	MATERIAL	REPAIR FIG. NO.	MATERIAL	REPAIR FIG. NO.
9			7079-T611 FORGING A			
10			BAC1517-1470 7075-T6 CLAD			
11			.063 CLAD 7075-T6		BAC1490-2807 7075-T6 CLAD	
12			.056 CLAD 7075-T6		BAC1490-2807 7075-T6 CLAD	
13			.045 CLAD 7075-T6		.045 CLAD 7075-T6	
14			.051 CLAD 7075-T6		BAC1490-2807 7075-T6 CLAD	
15			BAC1518-394 7075-T6		.050 2024-T3 CLAD B	
16			.063 CLAD 7075-T6		BAC1514-1699 2024-T42	
17			BAC1517-1147 7075-T6 CLAD			
18			.045 CLAD 7075-T6		BAC1490-2807 7075-T6 CLAD	
19			.056 CLAD 7075-T6		BAC1490-2506 7075-T6 CLAD	
20	.16 7075-T6		.050 CLAD 7075-T6		AND10136-1603 2024-T42	
21	BAC1503-100225 7075-T6		.080 CLAD 7075-T6		BAC1505-100537 7075-T6	
22			BAC1517-1062 7075-T6 CLAD			
23			.071 CLAD 7075-T6		BAC1514-1738 2024-T42	
24			.063 CLAD 7075-T6		BAC1514-1700 2024-T42	

Section 46 - Structure Identification
Figure 5 (Sheet 2)

ITEM	UPPER CHORD		WEB OR FORMED SECTION		LOWER CHORD	
	MATERIAL	REPAIR FIG. NO.	MATERIAL	REPAIR FIG. NO.	MATERIAL	REPAIR FIG. NO.
25	.080 2024-T3		.032 CLAD 7075-T6			
26					AND10134-1205 7075-T6	
27					AND10134-1005 7075-T6	
28					.050 CLAD 7075-T6	
29			.040 CLAD 7075-T6			
30					AND10137-2408 7075-T6	
31			.012 + .012 CLAD 7075-T6 B			
32					AND10140-1403 7075-T6	
33			.032 CLAD 2024-T3	53-10-4 Fig. 3		
34			.036 CLAD 2024-T3	53-10-4 Fig. 3		
35			.040 CLAD 2024-T3	53-10-4 Fig. 3		
36					BAC1506-1739 2024-T42	
37					BAC1514-1668 2024-T42	
38					BAC1514-1667 2024-T42	
39					BAC1514-413 2024-T42	
40					FORGING 7075-T73 A	

Section 46 - Structure Identification
Figure 5 (Sheet 3)

ITEM	INBOARD CHORD		WEB OR FORMED SECTION		OUTBOARD CHORD	
	MATERIAL	REPAIR FIG. NO.	MATERIAL	REPAIR FIG. NO.	MATERIAL	REPAIR FIG. NO.
41					BAC1518-393 7075-T6 or 7075-T6511	
42			0.045+0.045 +0.025 CLAD 2024-T3 [B]			
43			0.025 CLAD 2024-T4			
44	BAC1503-100225 7075-T6					
45			0.063 7075-T6			
46					AND10140-2401 7075-T6511	
47					AND10136-3005 7075-T6	
48					BAC1505-100537 7075-T6	
49					AND10134-1407 7075-T6	
50					BAC1490-2811 7075-T6	
51					AND10134-2004 7075-T6511	
52	BAC1514-914 7075-T6511		0.125 CLAD 7075-T6		0.071 CLAD 7075-T6	
53			0.080 CLAD 7075-T6			
54	0.071 CLAD 7075-T6					
55			0.080 CLAD 2024-T3			
56			0.045 7075-T6			

Section 46 - Structure Identification
Figure 5 (Sheet 4)

ITEM	INBOARD CHORD		WEB OR FORMED SECTION		OUTBOARD CHORD	
	MATERIAL	REPAIR FIG. NO.	MATERIAL	REPAIR FIG. NO.	MATERIAL	REPAIR FIG. NO.
57			0.071 7075-T6			
58	0.080 CLAD 7075-T6		0.040 CLAD 7075-T6		AND10134-1206 2024-T3511	
59	0.080 CLAD 7075-T6		0.040 CLAD 7075-T6		AND10136-2003 2024-T42	
60	0.032 CLAD 2024-T42	51-40-3 Fig. 1				
61	0.071 CLAD 7075-T6		0.036 CLAD 7075-T6		BAC1506-1828 2024-T42	
62			0.032 CLAD 7075-T6			
63	BAC1505-100052 7075-T6511		0.071 CLAD 2024-T42		0.056 CLAD 7075-T6	
64	STEEL BAR 4330 HT TR 220-240 KSI					
65	PLATE 7075-T7351					
66			0.025 CLAD 2024-T3	53-10-4 Fig. 3		
67			0.036 CLAD	51-40-3 Fig. 1		
68	BAC1509-100243 7075-T65111				BAC1509-100244 7075-T6511	
69	BAC1510-534 7075-T6		0.045 CLAD 7075-T6		BAC1503-100018 7075-T6	
70					BAC1490-2820 CLAD 7075-T6	
71					BAC1490-2810 CLAD 7075-T6	

Section 46 - Structure Identification
Figure 5 (Sheet 5)

ITEM	INBOARD CHORD		WEB OR FORMED SECTION		OUTBOARD CHORD	
	MATERIAL	REPAIR FIG. NO.	MATERIAL	REPAIR FIG. NO.	MATERIAL	REPAIR FIG. NO.
72	7075-T73 FORGING					
73			STUB BEAM BAC1518-402 7075-T6511 EXTRUSION			
74			STUB BEAM BAC1518-438 7075-T6511 EXTRUSION			
75					SUPPORT FITTING 7075-F FORGING	
76					SUPPORT FITTING BMS 7-186 FORGING 7075-T411	
77					INTERCOSTAL 0.100 CLAD 7075-T6	
78					INTERCOSTAL 7075-T411 FORGING HT-T73	
79	0.050 CLAD 7075-T6		0.071 CLAD 7075-T6		0.071 CLAD 7075-T6	
80			0.045 CLAD 2024-T3			
81	CHORD AND 10136-3005 7075-T6511					
82	CHORD BAC1490-2644 2024-T42					
83	BACK-UP STRAP 0.25 7075-T6					

Section 46 - Structure Identification
Figure 5 (Sheet 6)

ITEM	INBOARD CHORD		WEB OR FORMED SECTION		OUTBOARD CHORD	
	MATERIAL	REPAIR FIG. NO.	MATERIAL	REPAIR FIG. NO.	MATERIAL	REPAIR FIG. NO.
84	BAC1514-447 7075-T6					
87			REINFORCING STRAP 0.25 7075-T7651 CLAD PLATE			
88			FRAME 0.50 7075-T6			
89			DOUBLER 7075-T6 CLAD SH			
90			ANGLE 0.040 CLAD 2024-T3			
91			ANGLE BAC1490-2667 2024-T3			
92			CAP 0.020 CLAD 2024-T3			
93			COMPRESSION STRAP 0.63 CLAD 7075-T6			
94			ANGLE 0.032 CRES 301 1/4 HARD			
95	BAC1517-1176 7075-T73511		0.050 TITANIUM 6AL-4V TO MIL-T-9046 TYPE III COND C ANNEALED		BAC1517-1176 7075-T73511	

Section 46 - Structure Identification
Figure 5 (Sheet 6A)

ITEM	INBOARD CHORD		WEB OR FORMED SECTION		OUTBOARD CHORD	
	MATERIAL	REPAIR FIG. NO.	MATERIAL	REPAIR FIG. NO.	MATERIAL	REPAIR FIG. NO.
96	ANGLE 0.050 CLAD 2024-T3					
97			FRAME 0.071 CLAD 7075-T6			
98			DOUBLER 0.050 CLAD 2024-T3			
99			REINFORCING STRAP BAC1512-327 2024-T3511			
100	COMPRESSION CHORD 0.05 TITANIUM 6AL-4V MIL- T-9046E TYPE III COMP C, ANNEALED					
101			STIFFENER AND 10135-1002 7075-T6511 EXTRUSION			
102	REINFORCING STRAP 0.063 2024-T3					
103			FRAME 0.056 CLAD 7075-T6			
104					BAC1490-2506 CLAD 7075-T6	
105					BAC1490-2645 CLAD 7075-T6	
106			0.071 CLAD 7075-T6		BAC1490-2645 CLAD 7075-T6	

Section 46 - Structure Identification
Figure 5 (Sheet 6B)

ITEM	INBOARD CHORD		WEB OR FORMED SECTION		OUTBOARD CHORD	
	MATERIAL	REPAIR FIG. NO.	MATERIAL	REPAIR FIG. NO.	MATERIAL	REPAIR FIG. NO.
107			TRIPLER 0.050 CLAD 2024-T3			
108	UPPER CHORD BAC1503-13069 7075-T73511					
109			REINFORCEMENT PLATE 0.080 7075-T651 CLAD PLATE			
110			DOUBLER 0.040 7075-O CLAD			
111	0.040 CLAD 2024-T42					

Section 46 - Structure Identification
Figure 5 (Sheet 6C)

NOTES

[A] ATTACHMENT FITTING

[B] BONDED

[C] FOR AIRPLANES WITH AFT BODY FUEL PROVISION

[D] FOR CUM LINE NUMBERS THRU 503. STUB FRAME AT STA 716 HAS BEEN DELETED ON CUM LINE 504 AND ON

[E] DELETED

[F] FOR CUM LINE NUMBERS: 1 THRU 22

[G] FOR CUM LINE NUMBERS: 23 AND ON

[H] FOR CUM LINE NUMBERS: 1 THRU 24

[J] FOR CUM LINE NUMBERS: 25 AND ON

[K] FOR CUM LINE NUMBERS: 1 THRU 72, 74, 75, 79, 82

[L] FOR CUM LINE NUMBERS: 73, 76 THRU 78, 80, 81, 83 AND ON

[M] FOR CUM LINE NUMBERS: 1 THRU 87, 89, 92 THRU 94, 99, 100

[N] FOR CUM LINE NUMBERS: 88, 89, 91, 95 THRU 98, 101 AND ON

[O] FOR CUM LINE NUMBERS: 1 THRU 89, 91 THRU 94, 96, 98 THRU 100, 103, 108

[P] FOR CUM LINE NUMBERS: 90, 95, 97, 101, 102, 104 THRU 107, 109 AND ON

[Q] CAPPING INSTALLED ON CUM LINE NUMBERS: 236, 280, 281, 283 THRU 293 AT VARIOUS LOCATIONS BETWEEN BS 727 AND BS 907 IN THE LOWER LOBE

[R] FOR AIRPLANES WITH SB 737-53-1034 INCORPORATED

[S] FOR CUM LINE NUMBERS: 294, 295, 297 THRU 299

[T] FORGING OR 7079-T6 MATERIAL HAVE BEEN REPLACED BY FORGINGS OF 7075-T73. 7075-T73 FORGINGS ARE RECOMMENDED WHEN EXISTING STOCKS OF 7079-T6 ARE EXHAUSTED

[U] DELETED

[V] DELETED

[W] DELETED

[X] DELETED

[Y] DELETED

[Z] DELETED

[AA] FOR AIRPLANES WITH SB 57-1038 OR 57-1071 INCORPORATED, THE SURFACE OF HOLE WAS FLAP-PEENED (SHOT-PEENED) PRIOR TO INSTALLATION OF BUSHING

NOTE: SB 57-1038 HAS BEEN SUPERSEDED BY SB 57-1071

[AB] BOLT-ON REPAIR LUG FITTING OR REPLACEMENT FITTING FOR AIRPLANES WITH SB 53-1038 (PART III - LUG REPLACEMENT) INCORPORATED

Section 46 - Structure Identification
Figure 5 (Sheet 6D)

NOTES (CONT)

AC FOR CUM LINE NUMBERS:
561, 562
SOUND DAMPING ANGLES EXTENDING FROM PASSENGER FLOOR TO CROWN

AD FOR CUM LINE NUMBERS:
561 AND 562

AE FOR CUM LINE NUMBERS:
849 AND ON

AF FOR CUM LINE NUMBERS:
578, 698, 705, 818, 825, 850, 856, 888, 912, 914, 916, 921, 924, 932, 938, 940, 956, 963, 964, 984, 987

AG SEE FIGURE 7 FOR STRUCTURE IDENTIFICATION

AH FOR CUM LINE NUMBERS:
1 THRU 4, 7 THRU 98, 6 THRU 8, 13, 16 THRU 109 WITH SB 53-1061 INCORPORATED

AI FOR AIRPLANES WITH SB 53-1072 INCORPORATED

AJ FOR AIRPLANES WITH SB 53-1065 INCORPORATED

AK FOR AIRPLANES NOT LISTED IN AI

AL FOR CUM LINE NUMBERS:
1223 THRU 1585 AND AIRPLANES WITH SB 53-1094 INCORPORATED

AM FOR ALL PASSENGER AIRPLANES WITH CUM LINE NUMBERS:
849 THRU 1531

AN FOR ALL PASSENGER AIRPLANES WITH CUM LINE NUMBERS:
1565 AND ON

AO FOR ALL PASSENGER AIRPLANES

AP FOR ALL CARGO AIRPLANES

AQ FOR AIRPLANES CUM LINE NUMBERS 311 AND ON AND FOR CUM LINE NUMBERS 1 THRU 310 WITH SB 53-1038 (PART II - FITTING REPLACEMENT) INCORPORATED

AR FOR AIRPLANES CUM LINE NUMBERS 1 THRU 310 WITHOUT SB 53-1038 (PART II - FITTING REPLACEMENT) INCORPORATED

AS FOR CUM LINE NUMBERS:
1 THRU 5, 7, 9 THRU 11, 15, 17, 23, 26, 32, 35, 52, 89, 94, 98, 108, 113, 118 THRU 120, 127, 184, 194, 203, 212, 217 WITH SB 53-1121 INCORPORATED

Section 46 - Structure Identification
Figure 5 (Sheet 7)

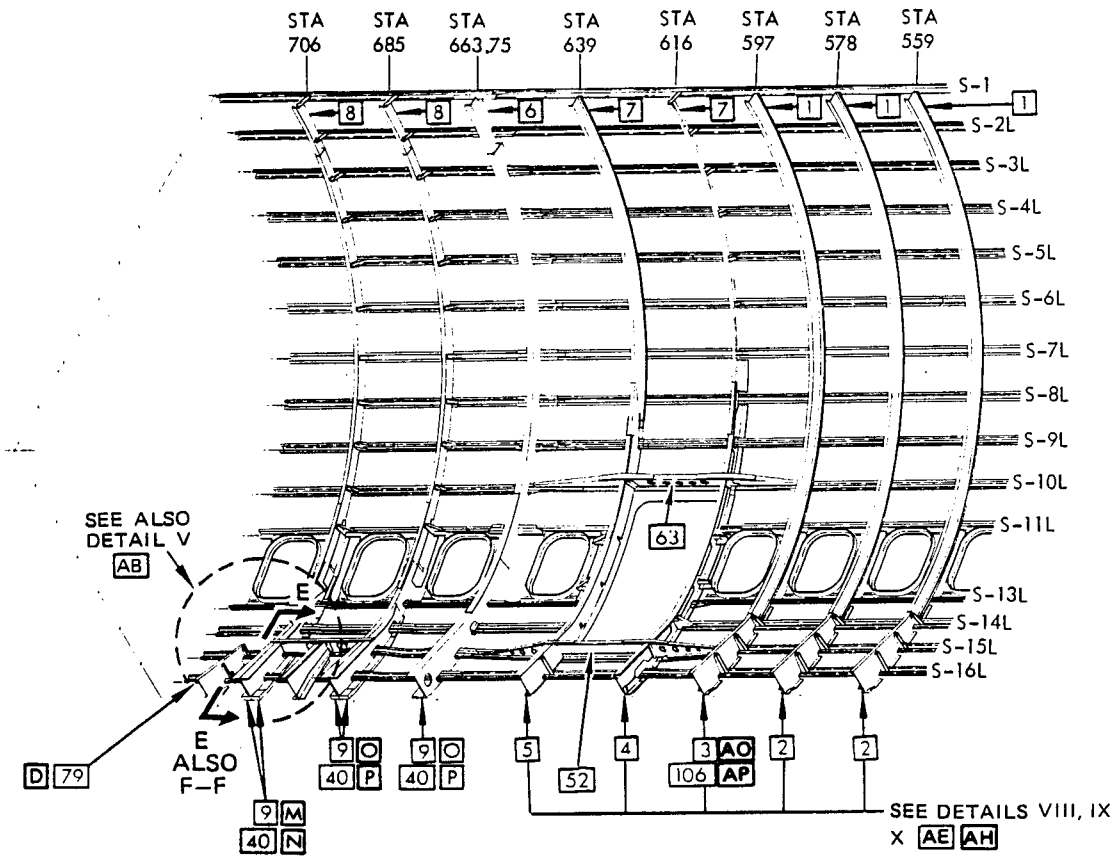

UPPER LEFT SIDE INSIDE VIEW
RIGHT SIDE OPPOSITE

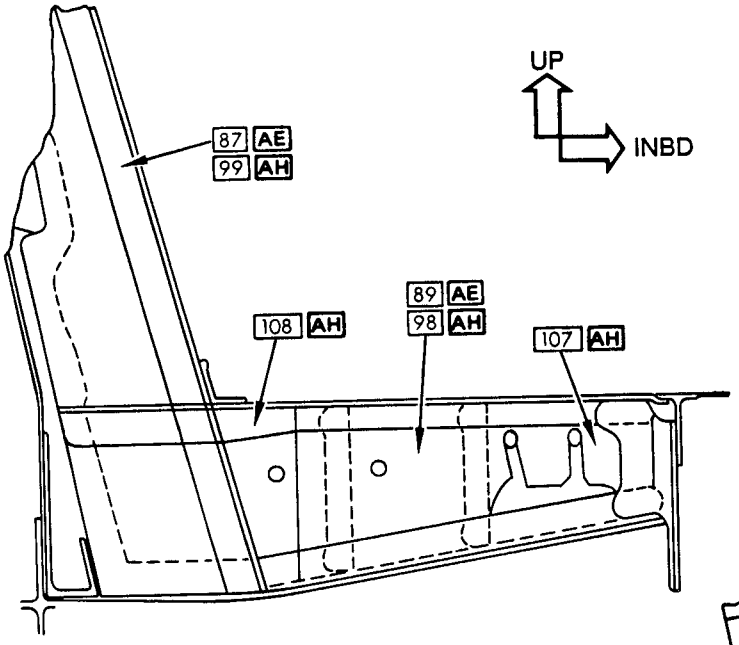

REAR VIEW B. S. 616 AND 639
DETAIL VIII AE AH

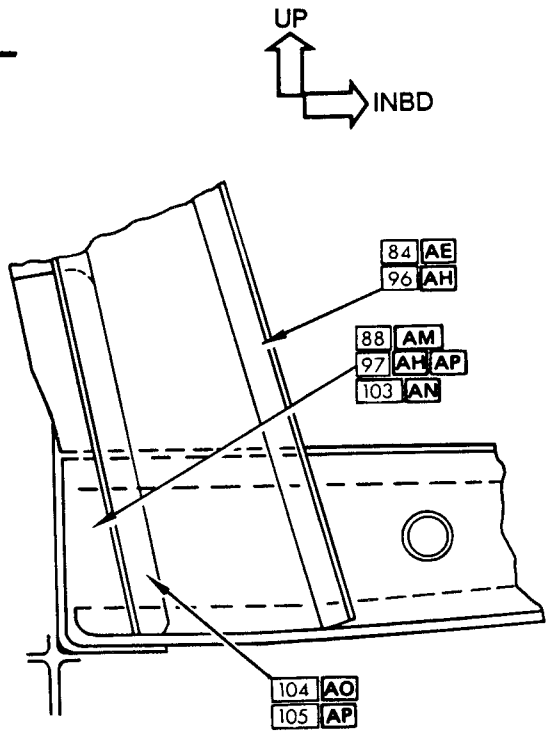

REAR VIEW B.S. 597
DETAIL IX AE AH

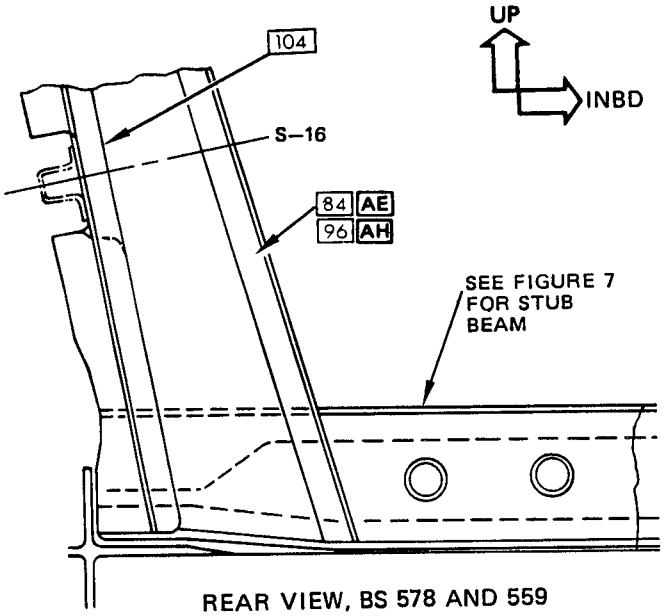

REAR VIEW, BS 578 AND 559
DETAIL X AE AH

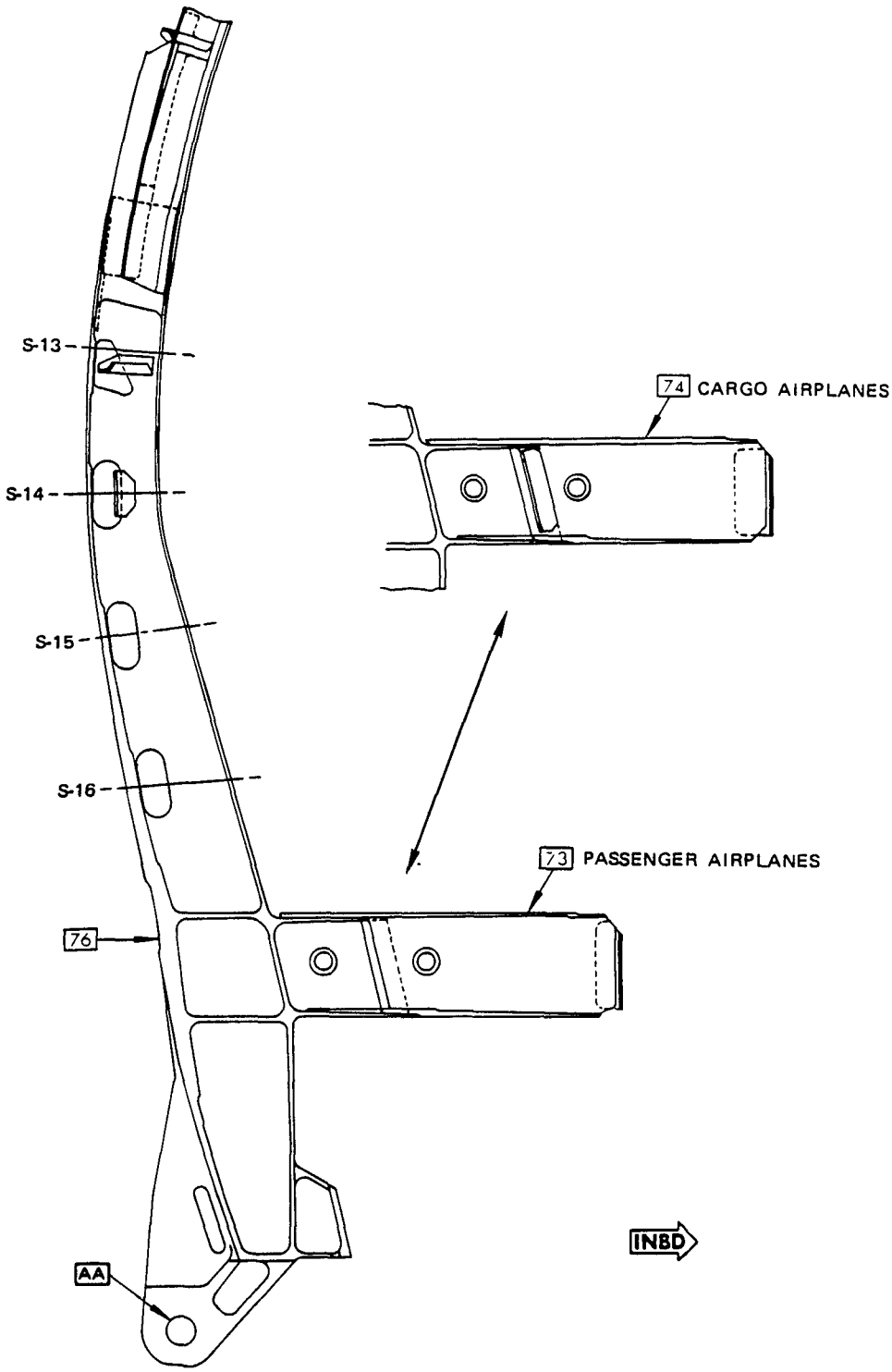

FRAME INSTALLATION, TRUNNION BEAM SUPPORT, STA 706 AQ
SECTION E–E

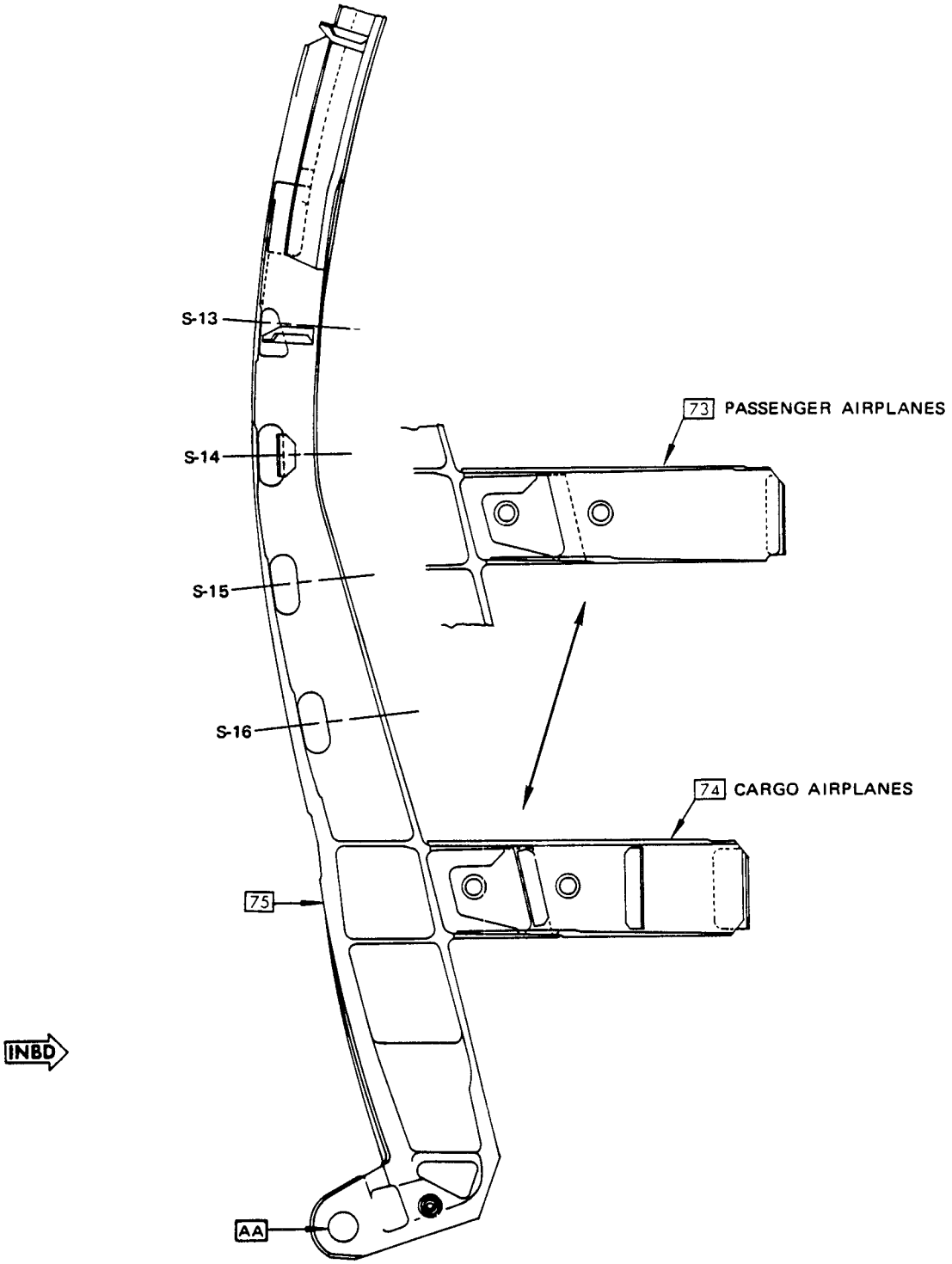

FRAME INSTALLATION, TRUNNION BEAM SUPPORT, STA 706 AR
SECTION F–F

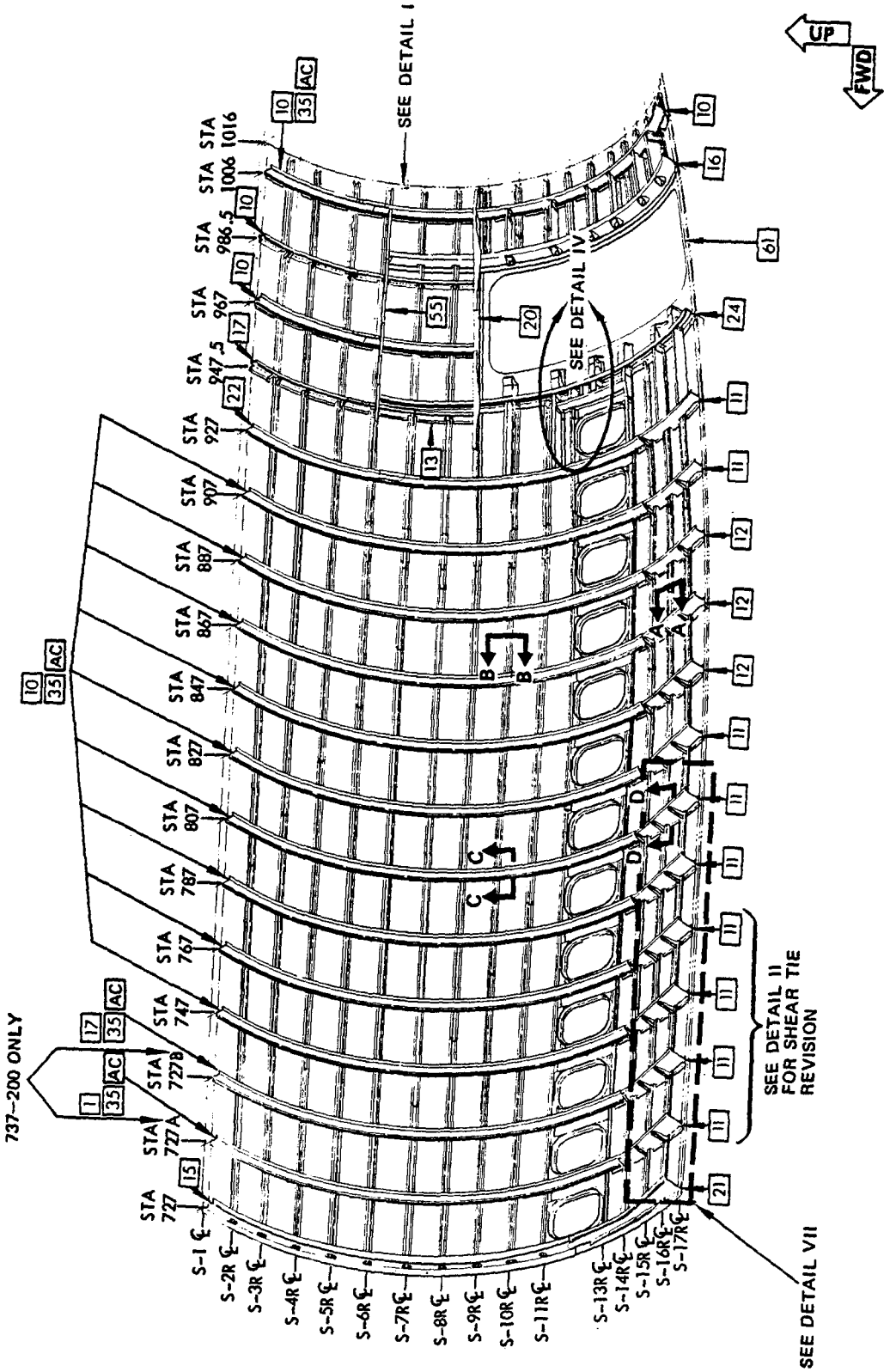

UPPER RH AFT INSIDE VIEW

EFFECTIVITY
737-100 AIRPLANES
AND
737-200 AIRPLANES .

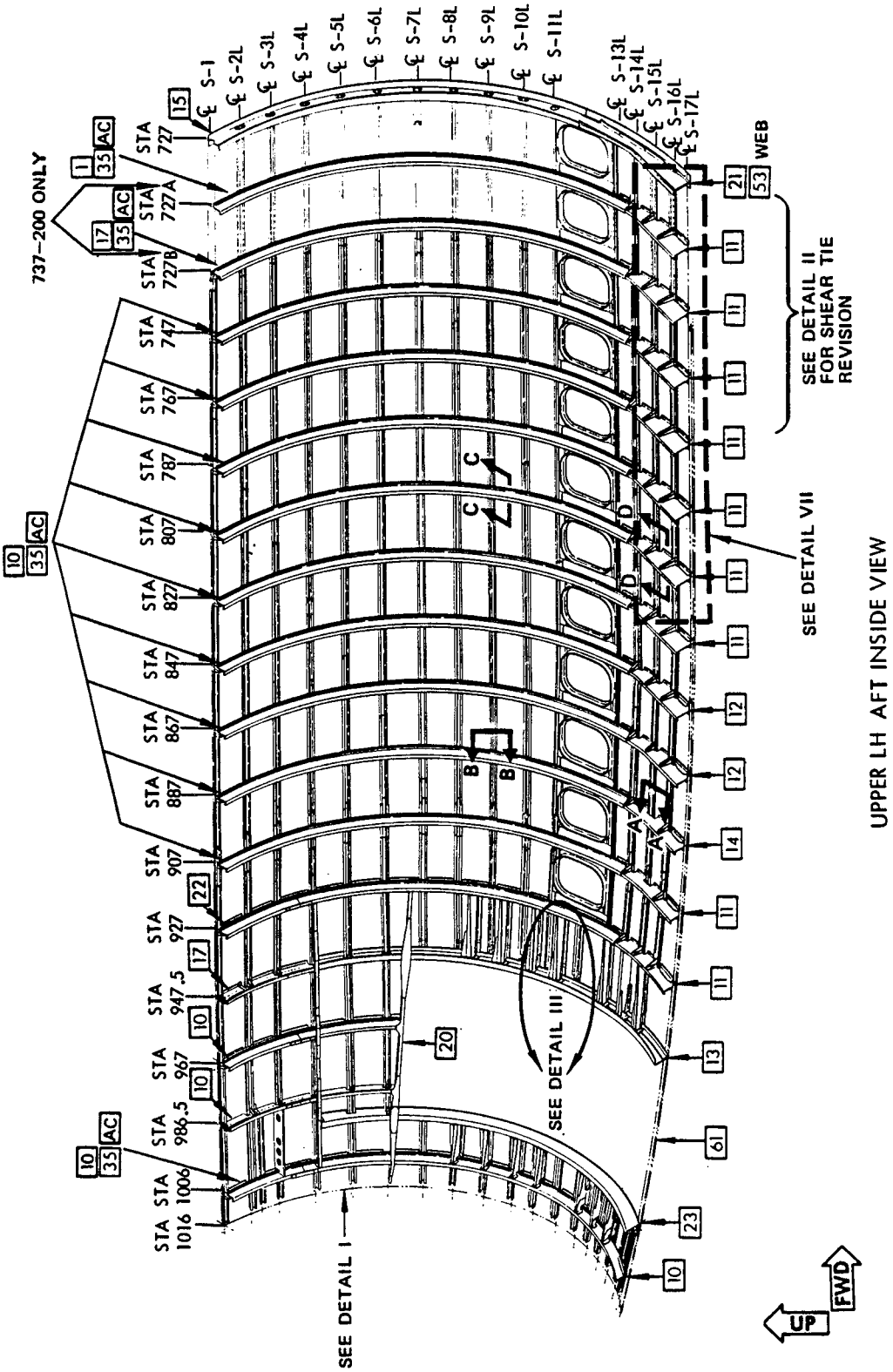

Section 46 - Structure Identification
Figure 5 (Sheet 10)

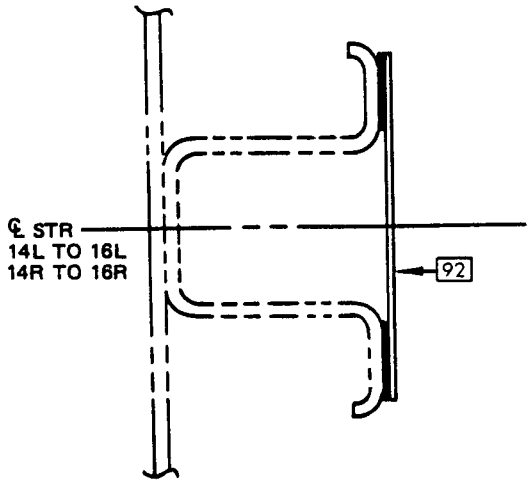

SECTION A–A

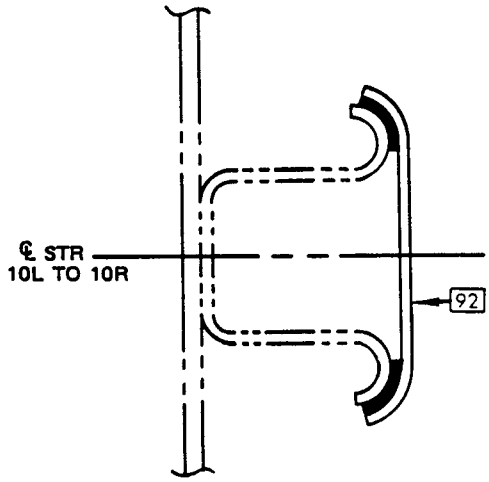

SECTION B–B

TYPICAL SECTIONS THROUGH STRINGERS FOR AIRPLANES LISTED IN AD

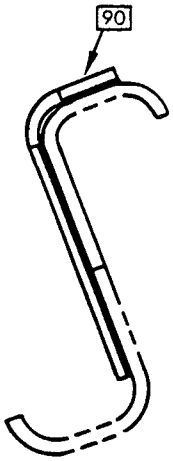

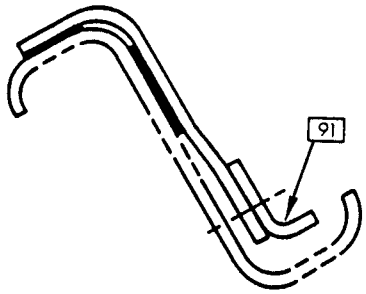

SECTION D–D

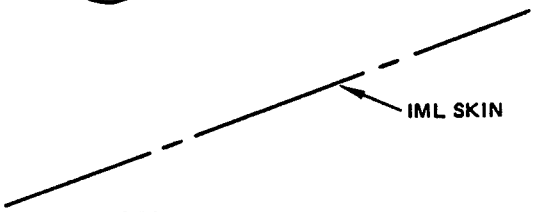

SECTION C–C

TYPICAL SECTIONS FOR ANGLES FOR AIRPLANES LISTED IN AD

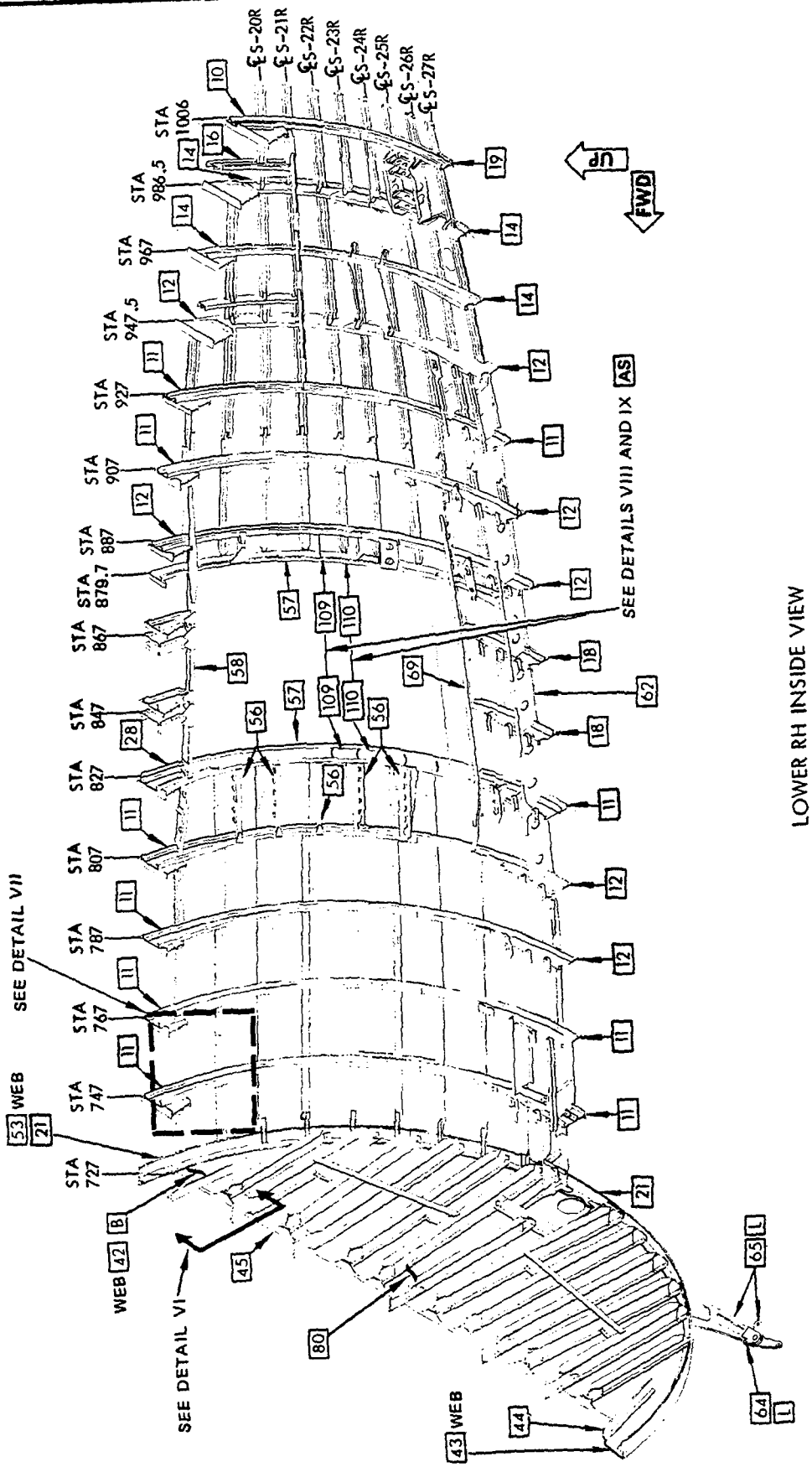

LOWER RH INSIDE VIEW

Section 46 - Structure Identification
Figure 5 (Sheet 11)

EFFECTIVITY
737-200 AIRPLANES

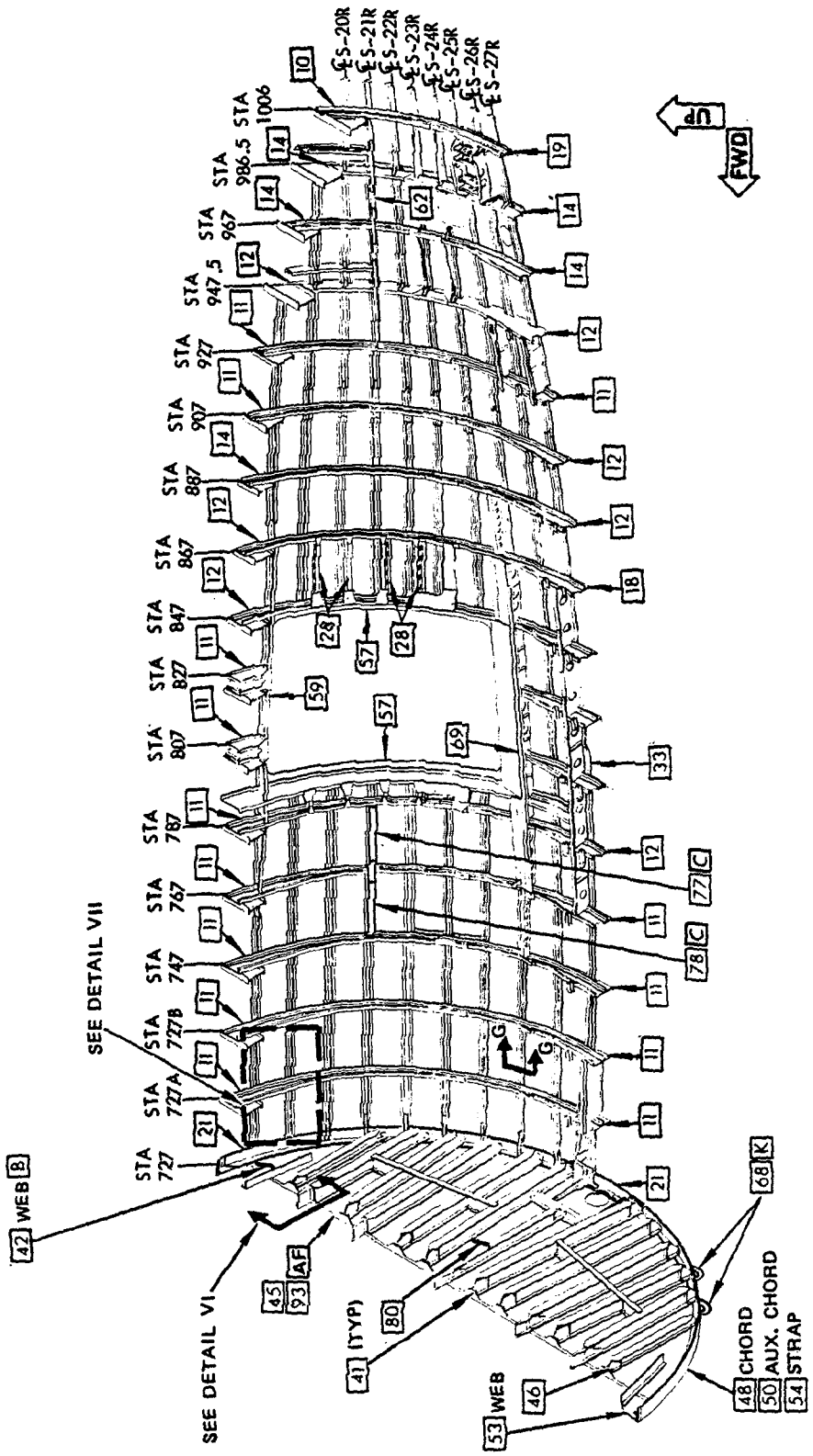

Section 46 - Structure Identification
Figure 5 (Sheet 12)

EFFECTIVITY
737-100 AIRPLANES

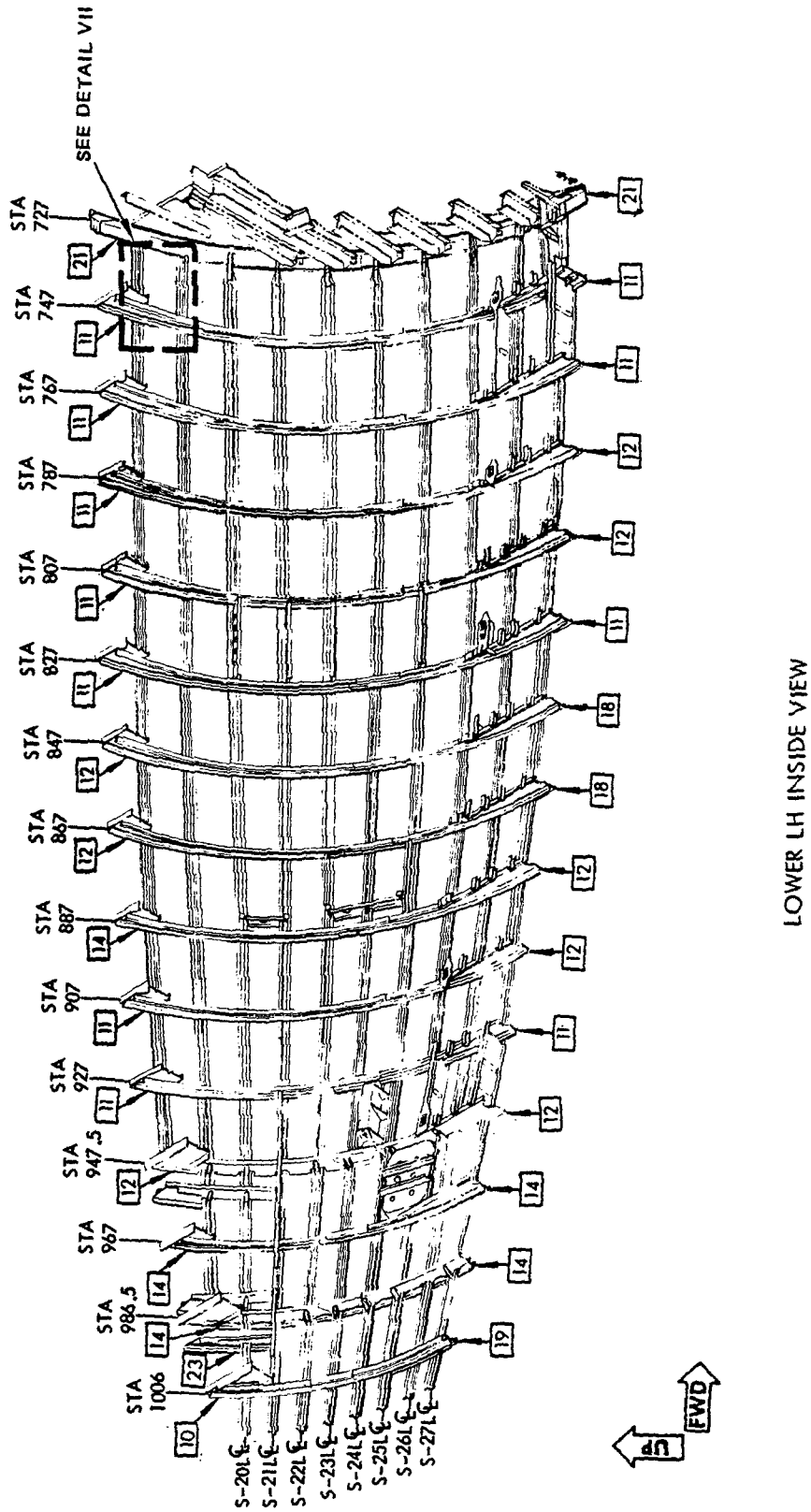

LOWER LH INSIDE VIEW

EFFECTIVITY
737-200 AIRPLANES

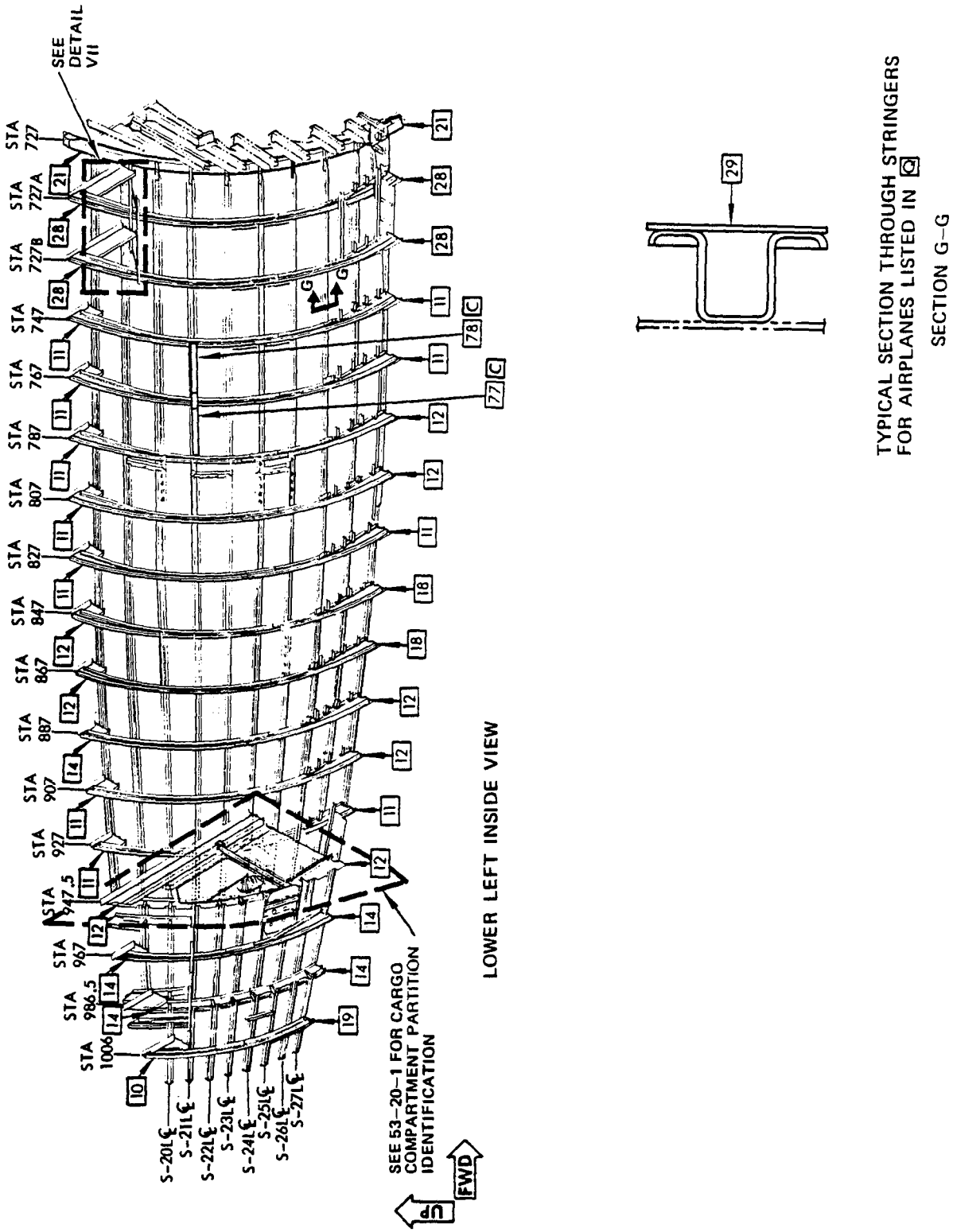

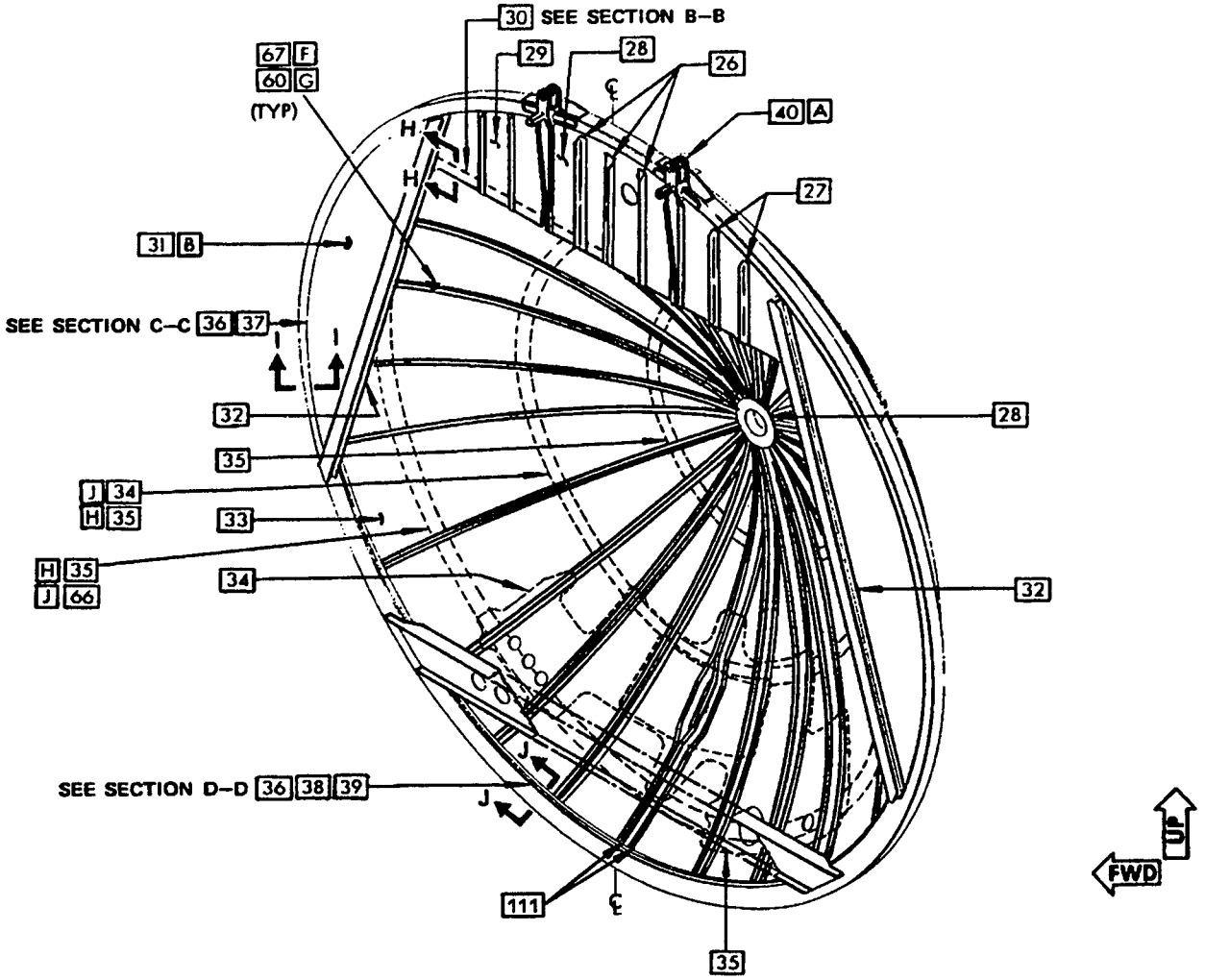

STATION 1016 BULKHEAD
DETAIL I

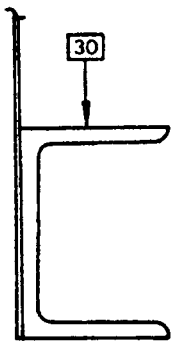

SECTION H-H

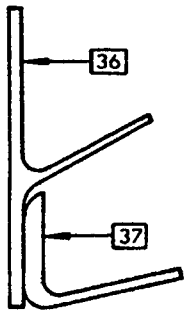

SECTION I-I

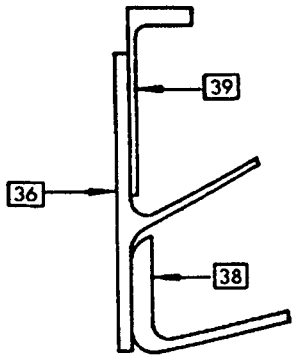

SECTION J-J

Section 46 - Structure Identification
Figure 5 (Sheet 15)

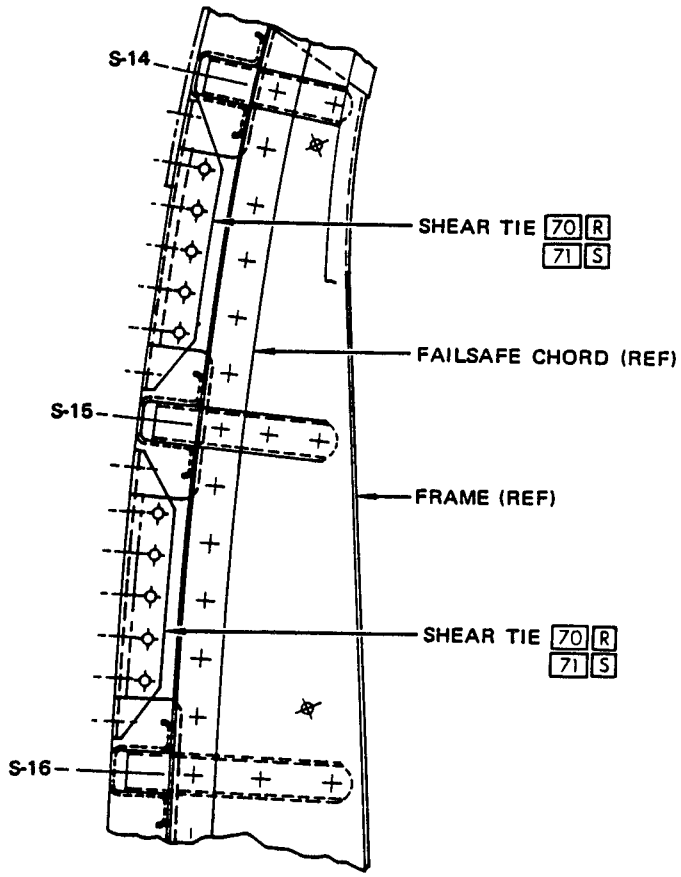

STA 747 (737-100), STA 727A (737-200)
STA 767 (737-100), STA 727B (737-200)
LEFT SIDE SHOWN, RIGHT SIDE OPPOSITE

SHEAR TIE REVISION
DETAIL II

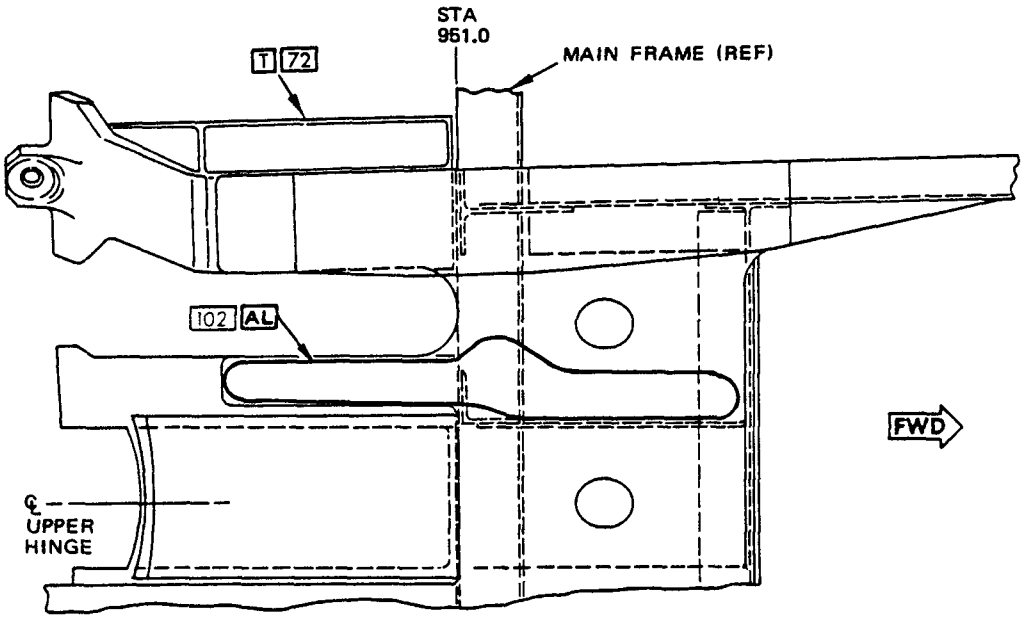

DETAIL III

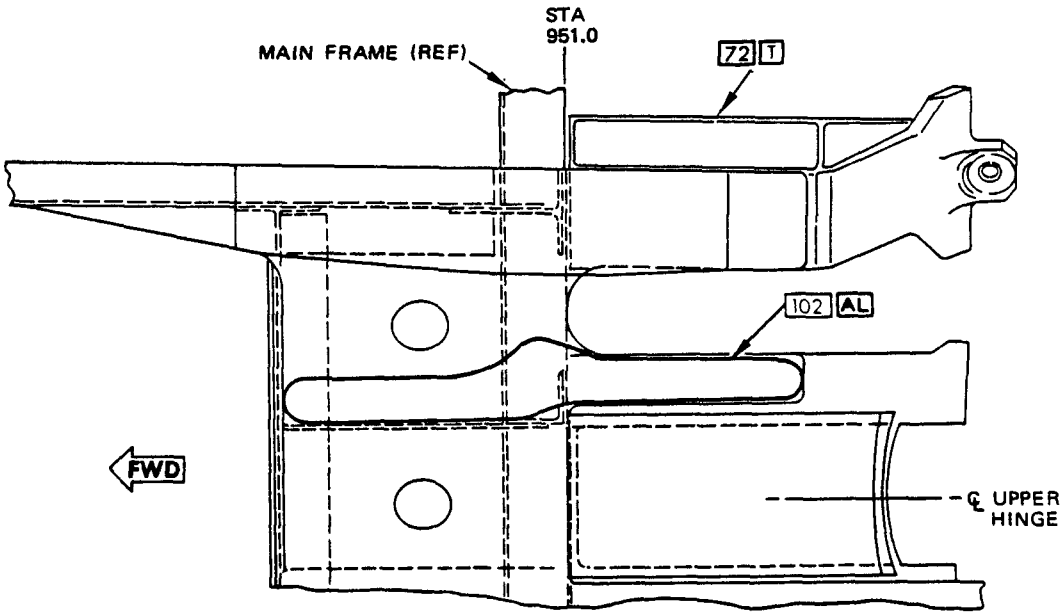

DETAIL IV

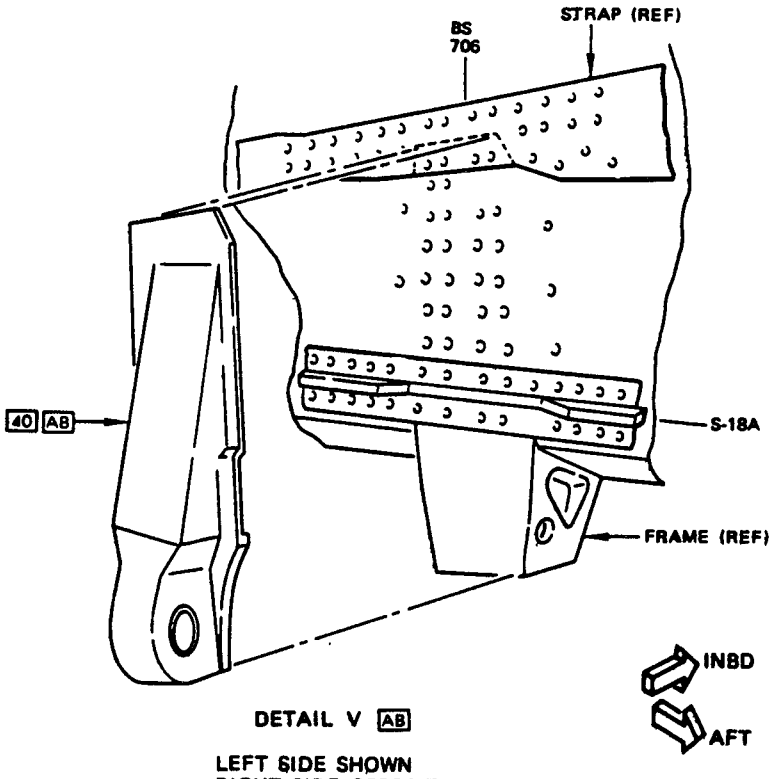

DETAIL V AB

LEFT SIDE SHOWN
RIGHT SIDE OPPOSITE

Section 46 - Structure Identification
Figure 5 (Sheet 18)

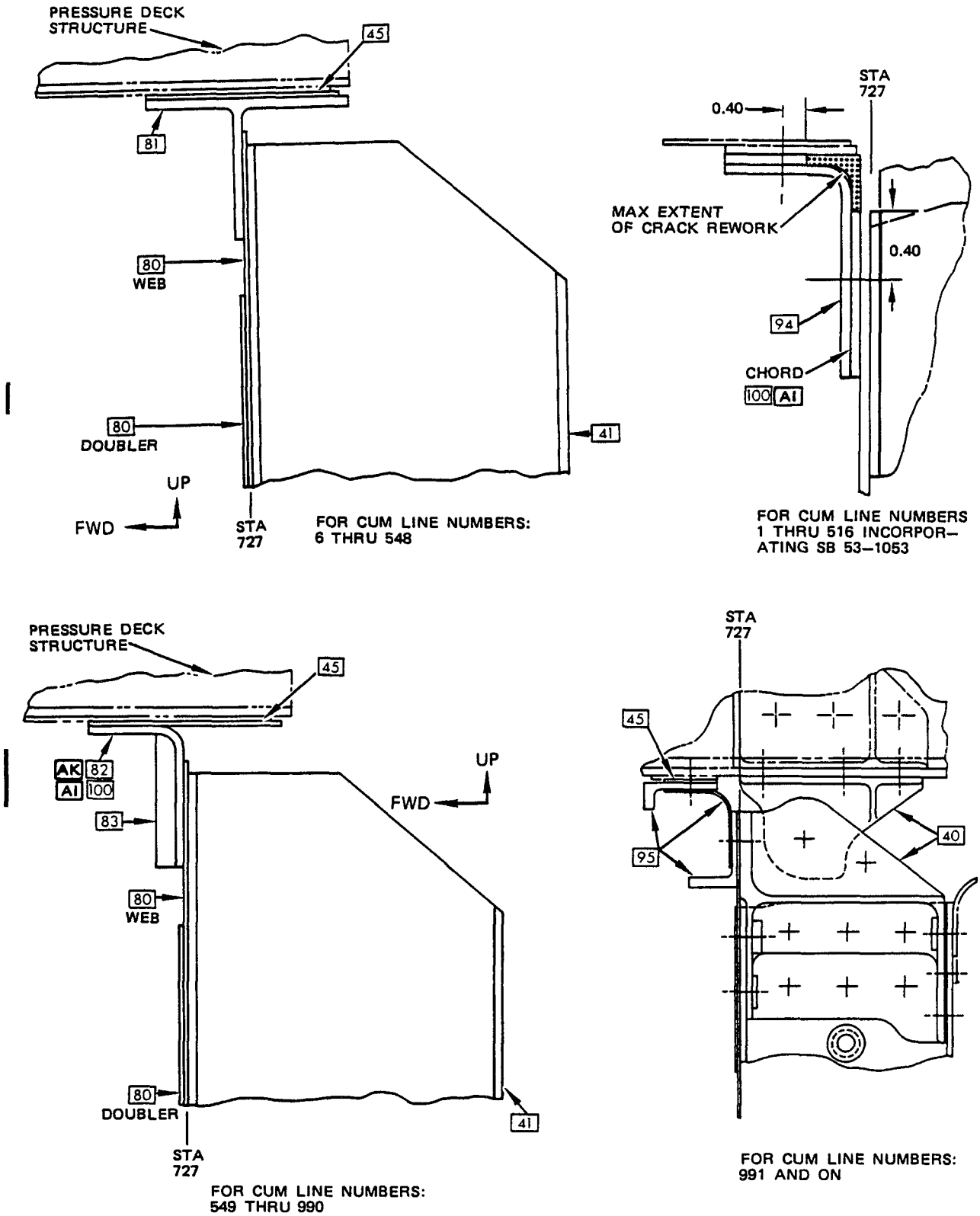
PRESSURE DECK STRUCTURE
45
81
80
WEB
80
DOUBLER
41
UP
FWD
STA 727
FOR CUM LINE NUMBERS: 6 THRU 548
STA 727
0.40
MAX EXTENT OF CRACK REWORK
0.40
94
CHORD
100 AI
FOR CUM LINE NUMBERS 1 THRU 516 INCORPORATING SB 53-1053
PRESSURE DECK STRUCTURE
45
AK 82
AI 100
83
UP
FWD
80
WEB
80
DOUBLER
41
STA 727
FOR CUM LINE NUMBERS: 549 THRU 990
STA 727
45
95
40
FOR CUM LINE NUMBERS: 991 AND ON

DETAIL VI

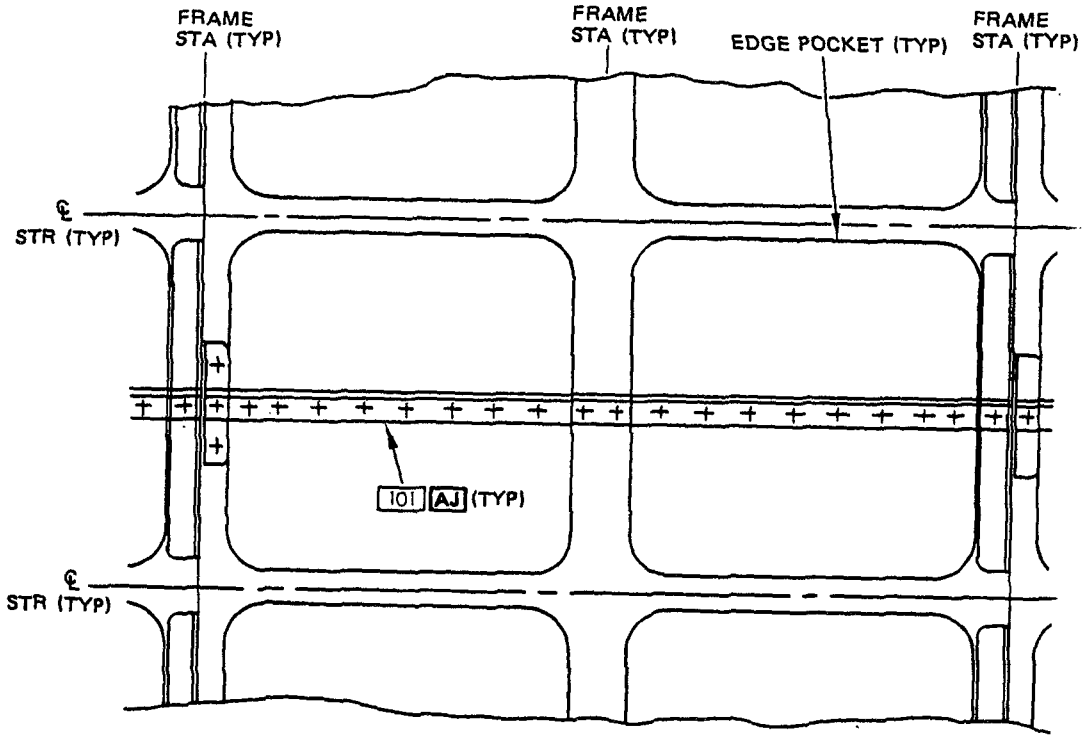

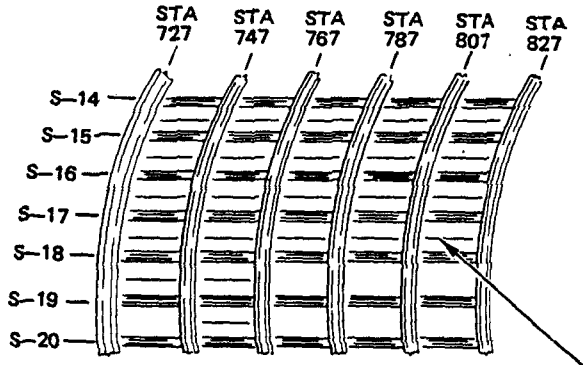

STIFFENER POSITIONS
737–100 AIRPLANES

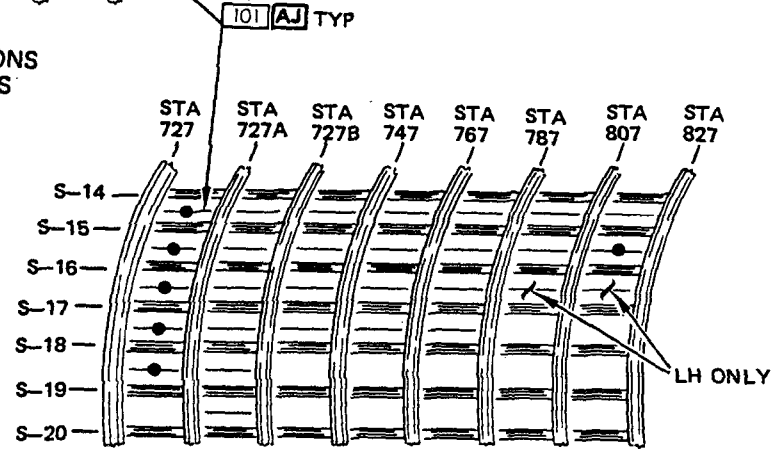

STIFFENER POSITIONS
737–200 AND 737–200C AIRPLANES
● = 737–200 ONLY

DETAIL VII

Section 46 - Structure Identification
Figure 5 (Sheet 18B)

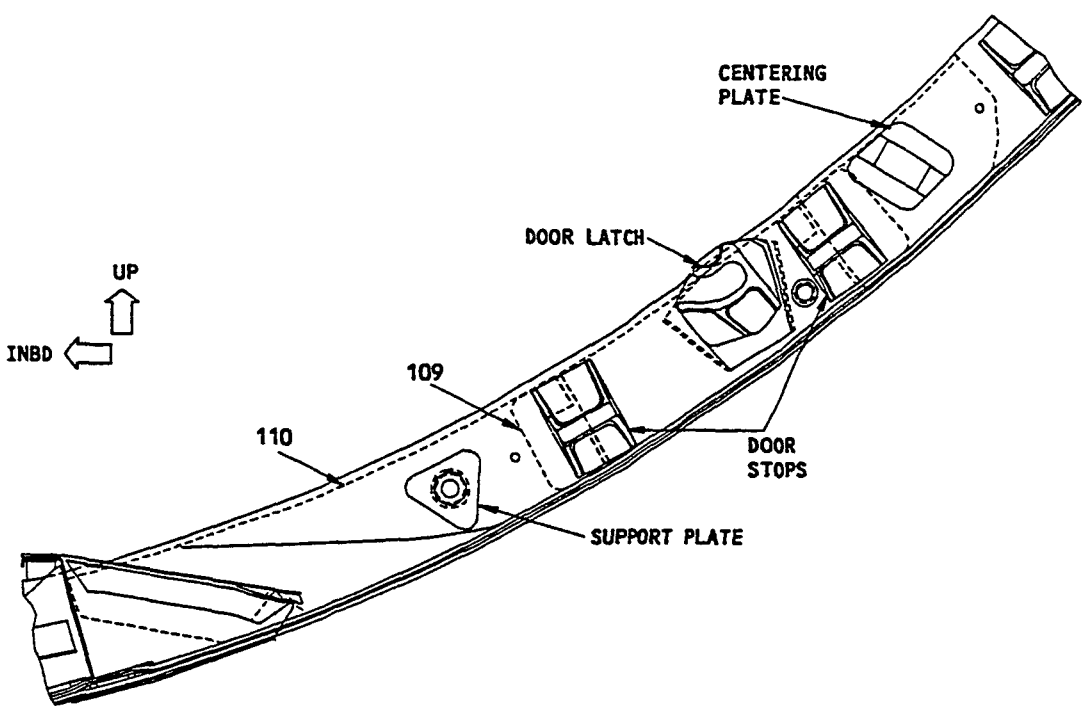

REAR VIEW STA 827
AFT CARGO DOORWAY FRAME REINFORCEMENT
DETAIL VIII AS

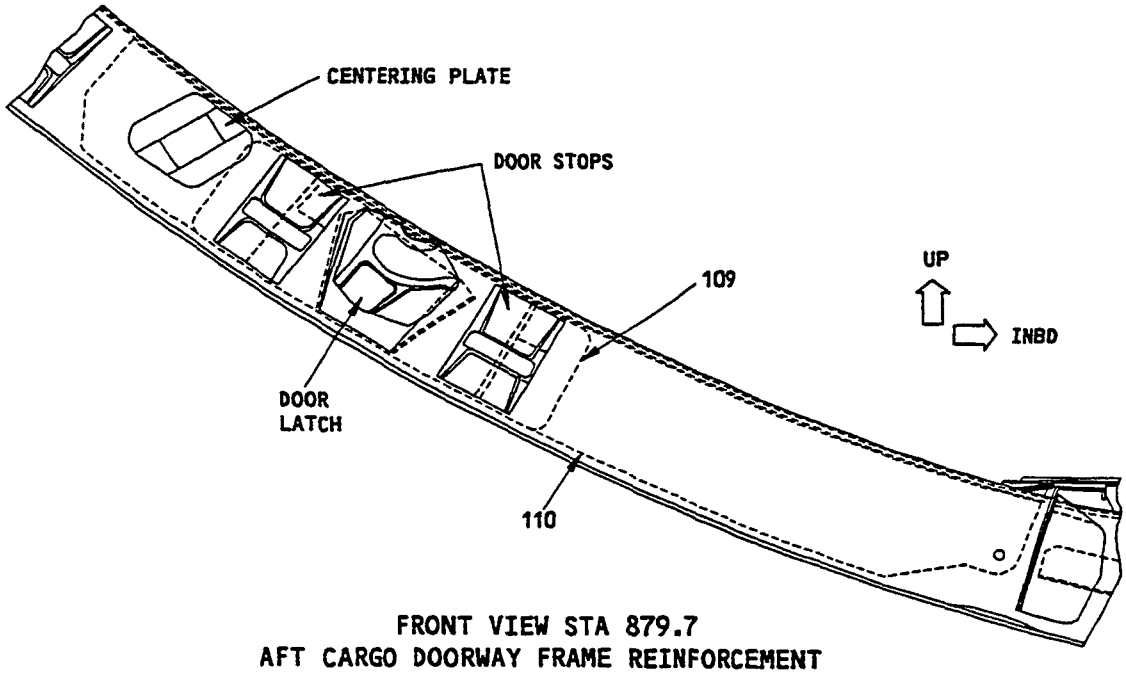

FRONT VIEW STA 879.7
AFT CARGO DOORWAY FRAME REINFORCEMENT
DETAIL IX AS

Section 46 - Structure Identification
Figure 5 (Sheet 18C)

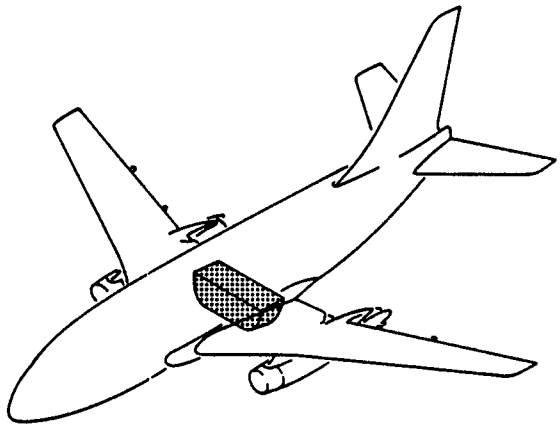

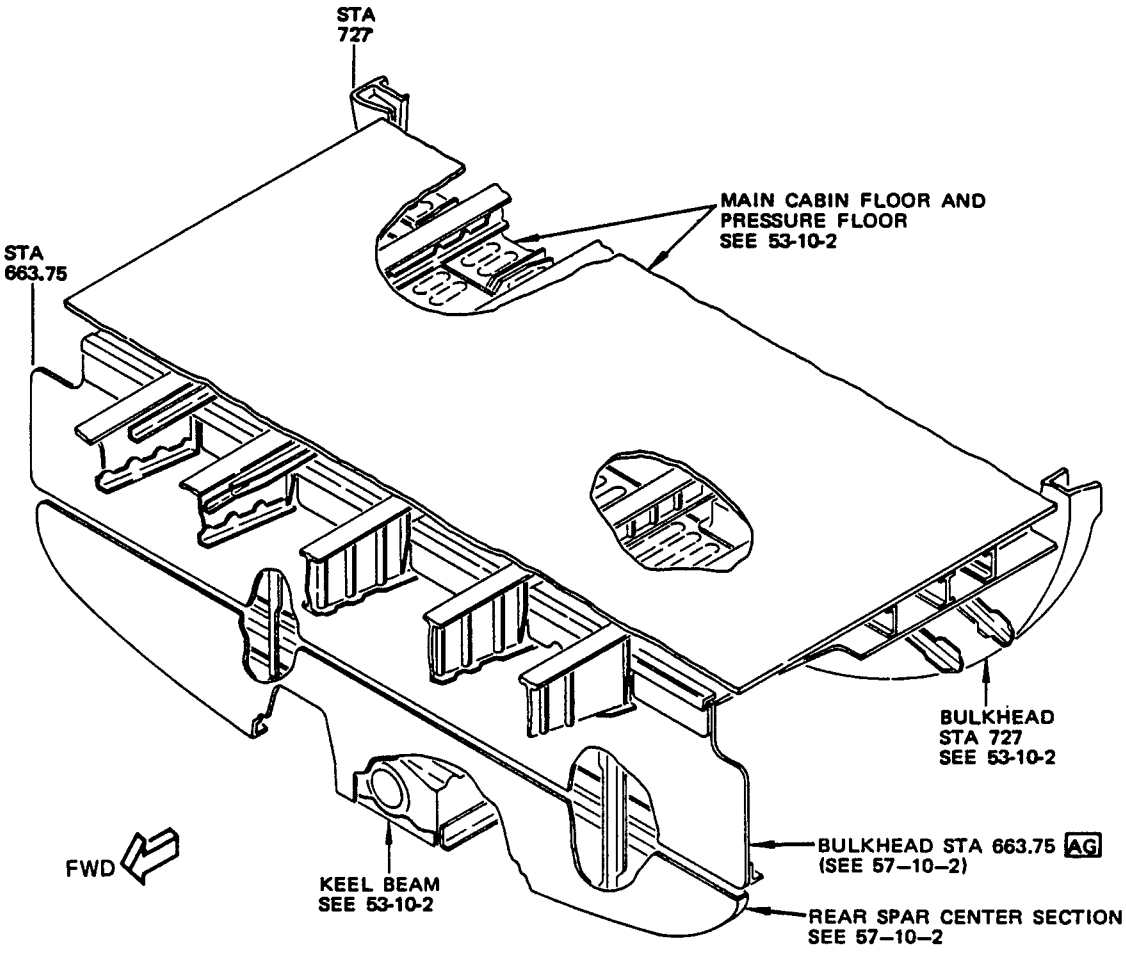

MAIN WHEEL WELL

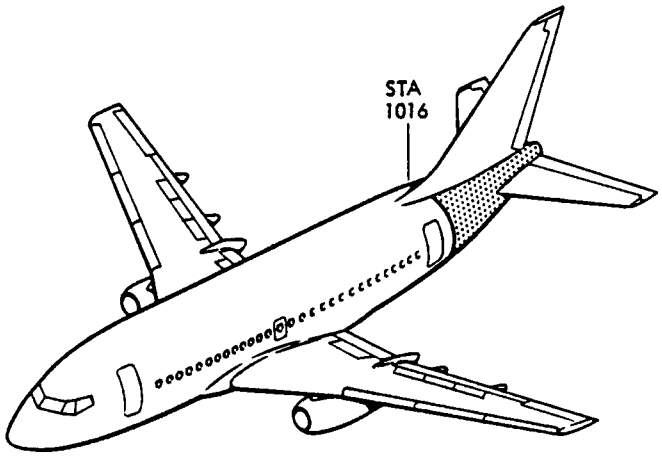

ITEM	MATERIAL	REPAIR FIG. NO.
1	BAC1514-1668 2024-T42	
2	BAC1517-1470 7075-T6	
3	0.050 CLAD 2024-T3	
4	BAC1490-2631 7075-T6	
5	0.063 CLAD 7075-T6	
6	0.056 CLAD 7075-T6	
7	0.063 CLAD 2024-T3	
8	0.050 CLAD 7075-T6	
9	0.040 CLAD 2024-T3	
10	BAC1503-100133 7075-T6	
11	BAC1506-1796 7075-T6511	

ITEM	MATERIAL	REPAIR FIG. NO.
12	BAC1504-8180 7075-T6	
13	BAC1493-133 7075-T6	
14	BAC1506-1808 7075-T6	
15	0.090 CLAD 7075-T6	
16	AND10133-1002 7075-T6	
17	0.040 CLAD 2024-T42	
18	AND10134-1404 7075-T6	
19	0.071 CLAD 7075-T6	
20	BAC1514-1712 7075-T6	
21	AND10135-1005 7075-T6	
22	AND10141-2001 7075-T6	

Section 48 - Structure Identification
Figure 6 (Sheet 1)

ITEM	MATERIAL	REPAIR FIG. NO.
23	0.032 CLAD 7075-T6	
24	AND10135-1004 7075-T6	
25	BAC1506-1792 7075-T6	
26	0.040 CLAD 7075-T6	
27	0.160 CLAD 7075-T6	
28	BAC1503-100115 7075-T6	
29	MACHINED FORGING 7075-T73 [A]	
30	BAC1506-1793 7075-T3	
31	BAC1503-100231 2024-T3	
32	BAC1520-1412 7075-T6	
33	0.125 CLAD 7075-T6	
34	MACHINED FORGING [A] 7079-T611 [B] 7075-T73 [C]	
35	0.080 CLAD 7075-T6	
36	BAC1503-100195 7075-T6511	
37	BAC1503-100026 7075-T6	
38	BAC1514-1696 7075-T6	

ITEM	MATERIAL	REPAIR FIG. NO.
39	0.500 CLAD 7075-T6	
40	0.032 CLAD 2024-T3	51-40-2 FIG. 1
41	BAC1503-100238 7075-T6	
42	BAC1503-100237 7075-T6	
43	BAC1514-1697 7075-T6	
44	BAC1503-100239 7075-T6	
45	BAC1514-1742 7075-T6	
46	BAC1503-1430 7075-T6	
47	BAC1514-1706 7075-T6	
48	BAC1506-626 7075-T6	
49	BAC1506-854 7075-T6	
50	0.071 CLAD 7075-T6	
51	BAC1506-2323 7075-T73	
52	7079-T611 7075-T3	
53	BAC1514-1847 7075-T6	
54	0.625 PLATE 2024-T351	

Section 48 - Structure Identification
Figure 6 (Sheet 2)

C08642

ITEM	MATERIAL	REPAIR FIG. NO.
55	BAC1505-100155 7075-T6	
56	0.012 + 0.012 CLAD 2024-T3 BONDED	51-40-2 FIG. 1
57	AND10136-1401 7075-T6511	
58	BAC1505-18600 7075-T6511	
59	BAC1505-100082 7075-T6	
60	0.032 COMMERCIALLY PURE (C.P.) TITANIUM	
61	0.020 C.P. TITANIUM	
62	0.032 CLAD 2024-T42	
63	0.012 C.P. TITANIUM	
64	0.025 C.P. TITANIUM	
65	0.036 C.P. TITANIUM	
66	0.063 CLAD 7075-T6	
67	0.036 + 0.040 CLAD 7075-T6 BONDED ASSY	

ITEM	MATERIAL	REPAIR FIG. NO.

C08643

Section 48 - Structure Identification
Figure 6 (Sheet 3)

NOTES

A ATTACHMENT FITTING

B FOR CUM LINE NUMBERS:
1 THRU 95, 97, 99, 103

C FOR CUM LINE NUMBERS:
96, 98, 100 THRU 102, 104 AND ON

D FOR CUM LINE NUMBERS:
1 THRU 101, 103 THRU 105, 107, 109

E FOR CUM LINE NUMBERS:
102, 106, 108, 110 AND ON

F FOR CUM LINE NUMBERS:
1 THRU 36

G FOR CUM LINE NUMBERS:
37 AND ON

H FOR CUM LINE NUMBERS:
100 THRU 102, 104 THRU 138, 140 AND ON

J FOR CUM LINE NUMBERS:
1 THRU 35 AFTER INCORPORATION OF SB 53-1001 AND 36 THRU 171

K FOR CUM LINE NUMBERS:
172 AND ON

L FOR CUM LINE NUMBERS:
1 THRU 101, 103 THRU 105, 107 THRU 109, 111, 112, 114 THRU 117, 121 THRU 125, 129 THRU 133, 135, 136, 157

M FOR CUM LINE NUMBERS:
102, 106, 110, 113, 118 THRU 120, 126 THRU 128, 134, 137 THRU 156, 158 AND ON

N DELETED

O DELETED

P FOR CUM LINE NUMBERS:
1 THRU 171 AFTER INCORPORATION OF SB 53-1013

Q FOR CUM LINE NUMBERS:
1 THRU 171 PRIOR TO INCORPORATION OF SB 53-1013

R FOR CUM LINE NUMBERS:
172 THRU 236 PRIOR TO INCORPORATION OF SB 49-1016

S FOR CUM LINE NUMBERS:
237 AND ON AND EARLIER AIRPLANES WITH SB 49-1016 INCORPORATED

T FOR CUM LINE NUMBERS:
1 THRU 168 AFTER INCORPORATION OF SB 53-1008 AND 169 AND ON

Section 48 - Structure Identification
Figure 6 (Sheet 4)

REF. DWG.
65-73748

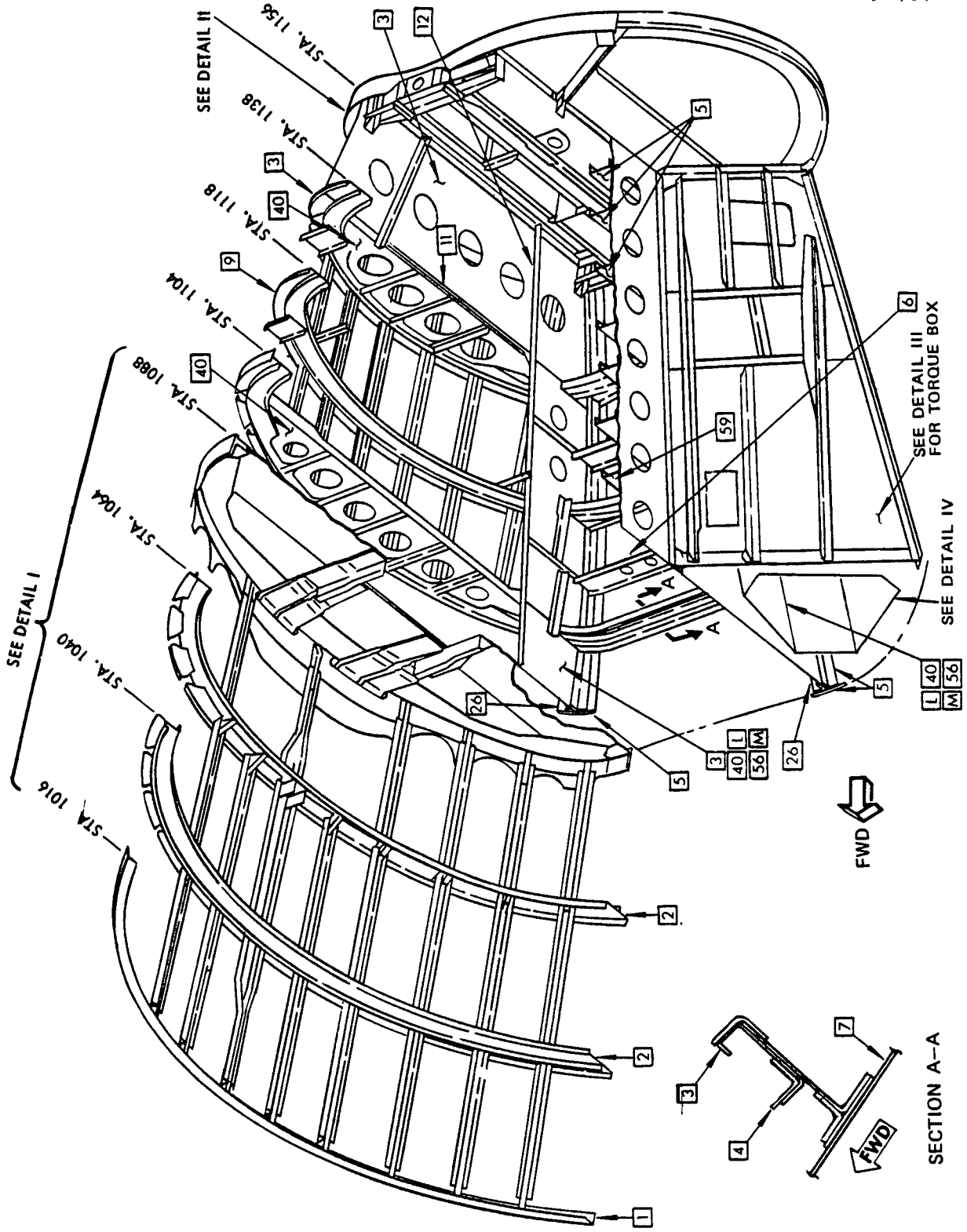

Section 48 - Structure Identification
Figure 6 (Sheet 5)

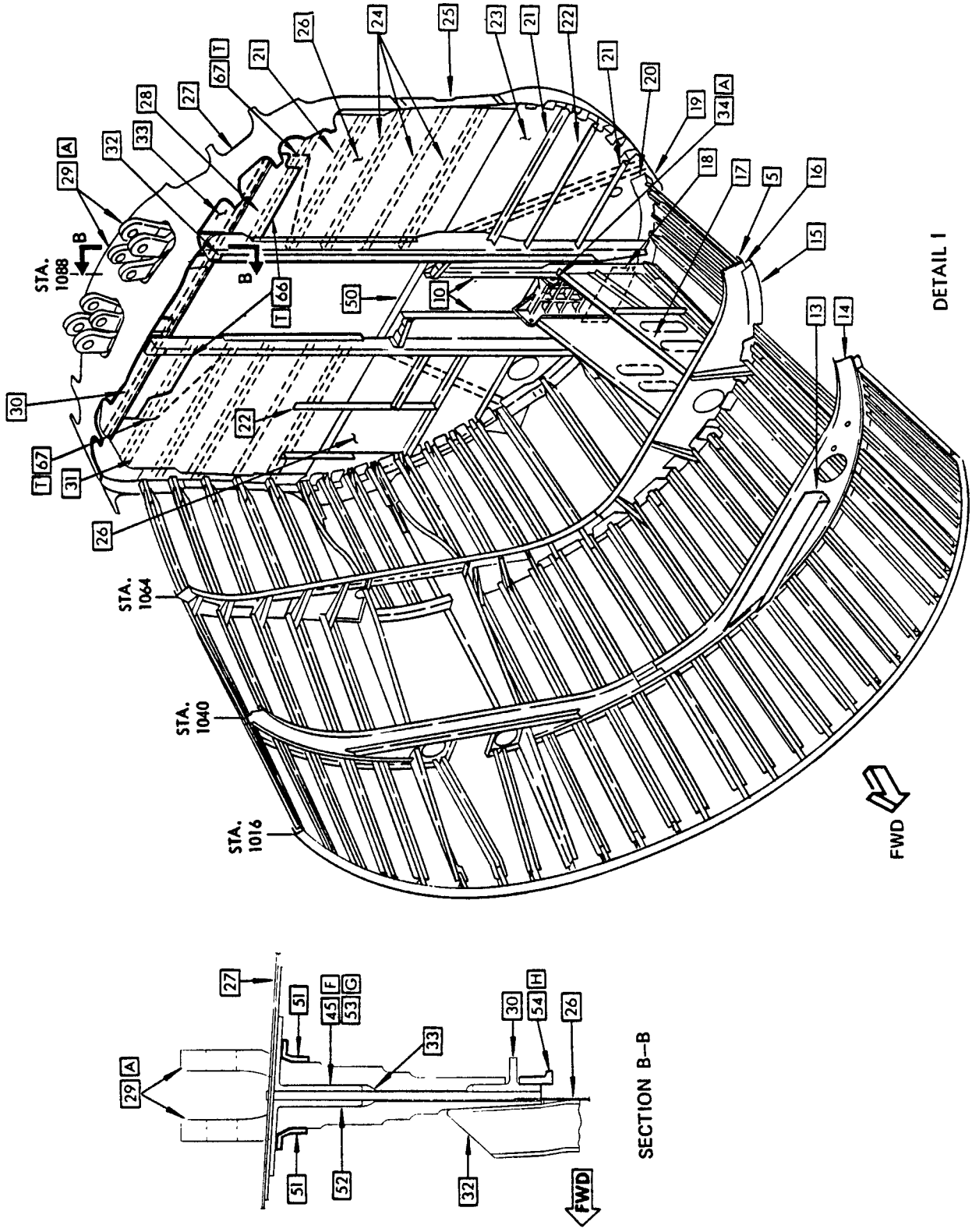

Section 48 - Structure Identification
Figure 6 (Sheet 6)

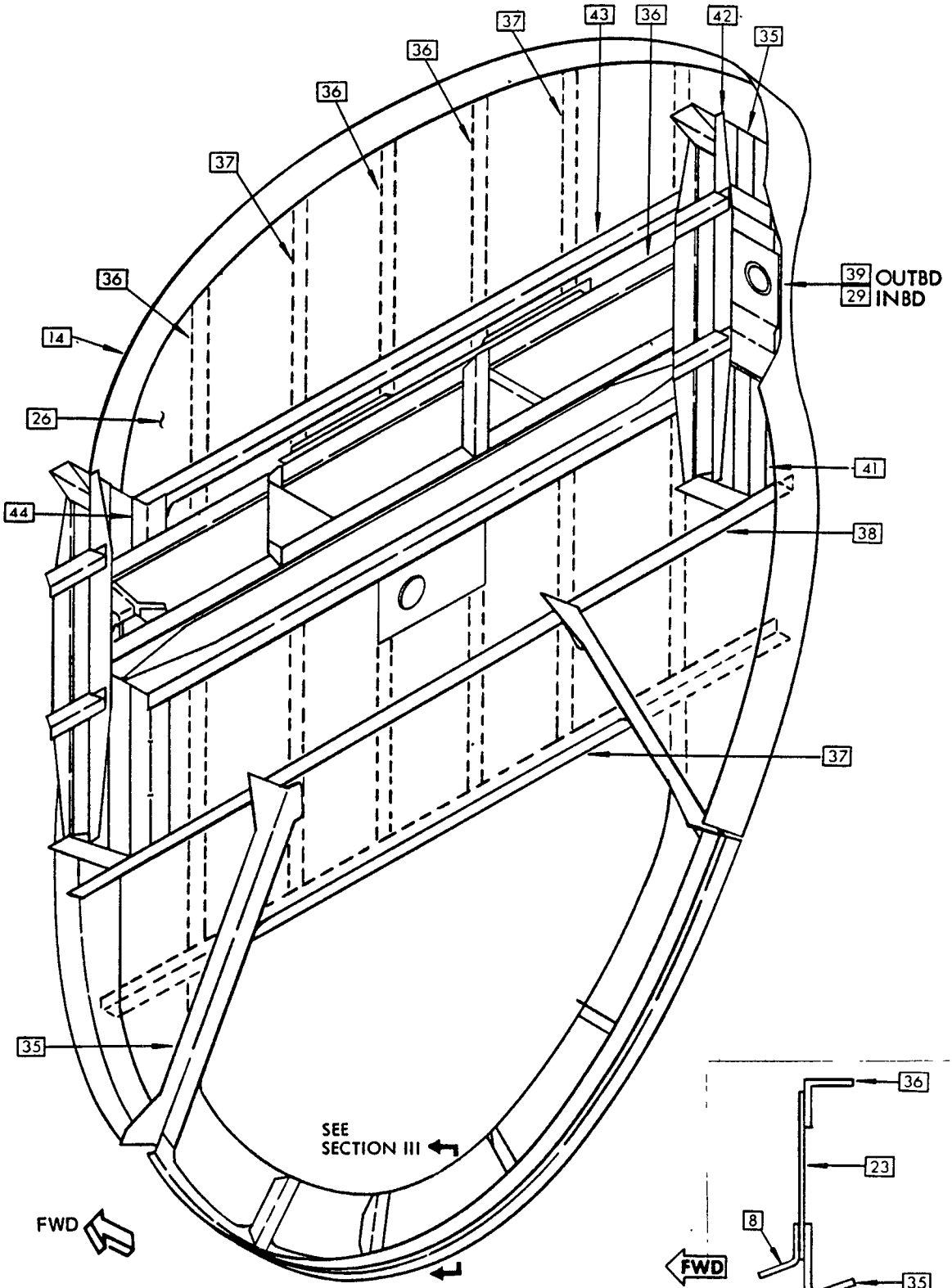

STATION 1156 BULKHEAD

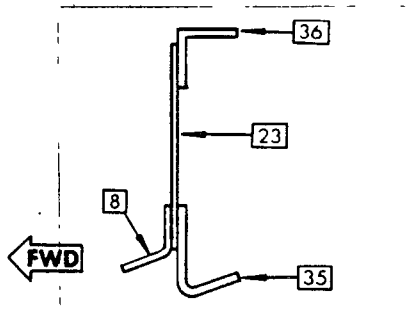

SECTION III

DETAIL II

Section 48 - Structure Identification
Figure 6 (Sheet 7)

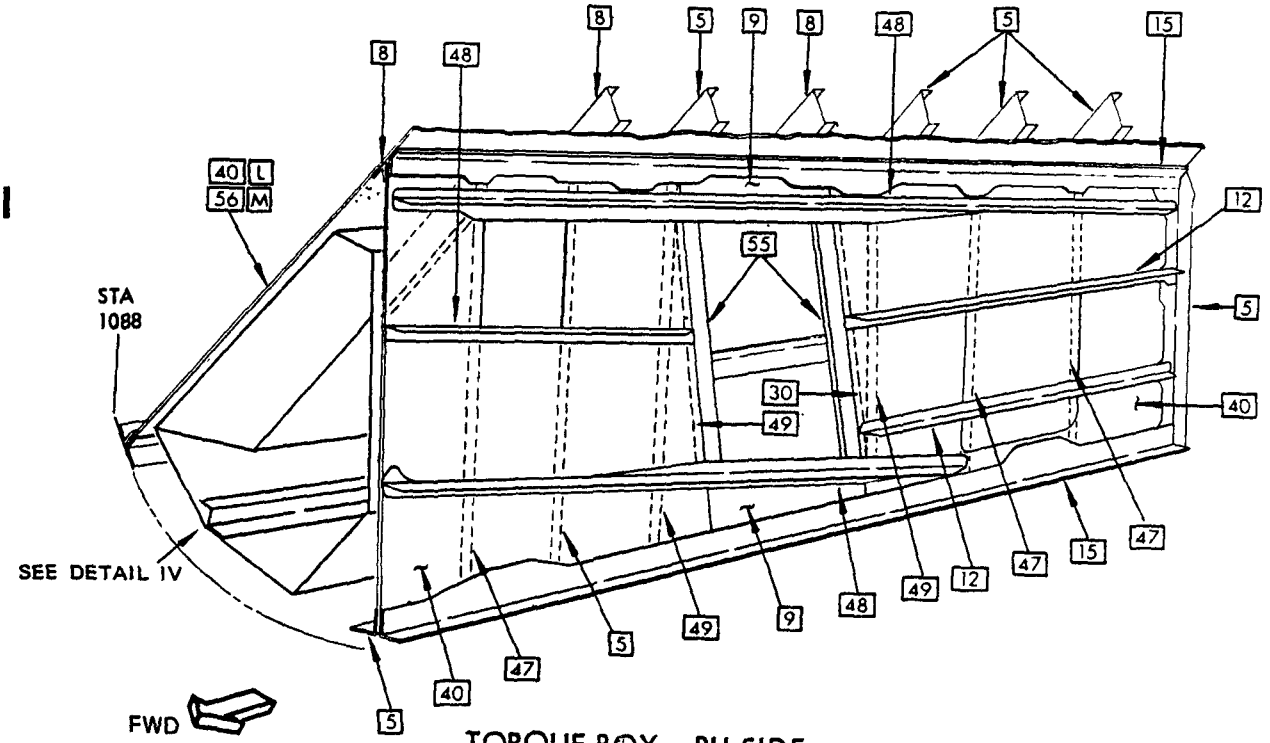

TORQUE BOX - RH SIDE

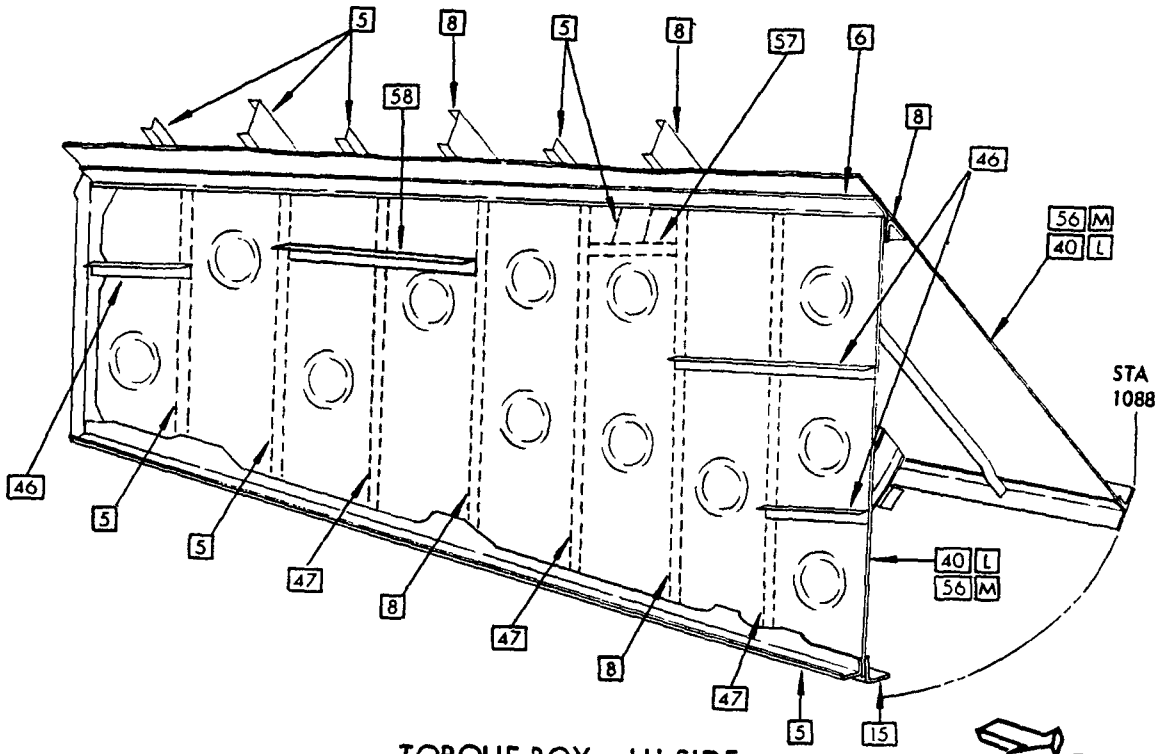

TORQUE BOX - LH SIDE

DETAIL III

Section 48 - Structure Identification
Figure 6 (Sheet 8)

REF. DWG.
65-68918
65-68939

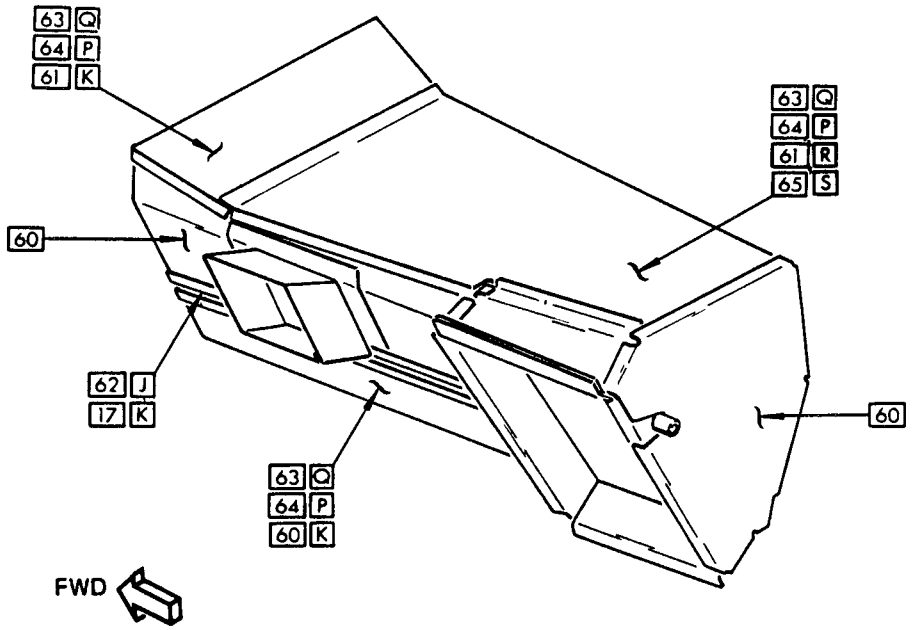

VIEW LOOKING OUTBOARD

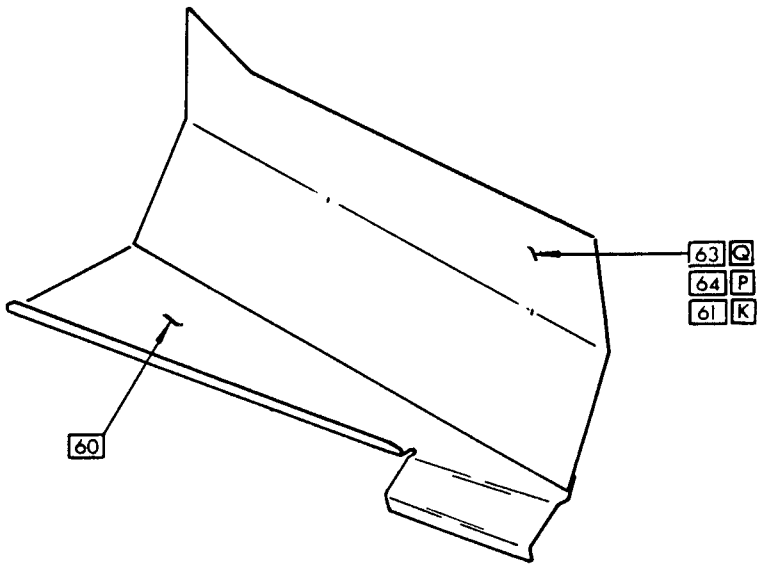

VIEW SHOWING OUTBOARD AND BOTTOM PANELS
DETAIL IV

Section 48 - Structure Identification
Figure 6 (Sheet 9)

ITEM	UPPER CHORD		WEB OR FORMED SECTION		LOWER CHORD	
	MATERIAL	REPAIR FIG. NO.	MATERIAL	REPAIR FIG. NO.	MATERIAL	REPAIR FIG. NO.
1	BAC1505-39042 7075-T6		0.032 CLAD 7075-T6		AND 10136-2005	
2			0.025 CLAD 7075-T6			
3			0.032 CLAD 7075-T6			
4			0.036 CLAD 7075-T6			
5	AND 10136-2404 7075-T6		0.025 CLAD 7075-T6		AND 10136-2005 7075-T6	
6			0.063 CLAD 7075-T6			
7			BAC1493-280 CLAD 2024-T4			
8	AND 10133-1001 7075-T6		0.040 CLAD 7075-T6			
9			AND 10137-2012 2024-T4			
10			BAC1493-459 CLAD 2024-T4			
11			BAC1493-494 2024-T3			
12	BAC1506-1794 7075-T6					
13	BAC1503-100229 7075-T6		0.050 CLAD 7075-0 HT-T6		BAC1506-1742 2024-T3	
14					BAC1490-2787 CLAD 2024-T4	
15	BAC1503-10281 7075-T6		0.036 + 0.025 CLAD 7075-T6 BONDED		AND 10134-1403 7075-T6	
16			0.032 CLAD 7075-T6		AND 10136-2007 7075-T6	

Main Cabin Floor Beams and Seat Tracks - Material Identification
Figure 7 (Sheet 1)

ITEM	UPPER CHORD		WEB OR FORMED SECTION		LOWER CHORD	
	MATERIAL	REPAIR FIG. NO.	MATERIAL	REPAIR FIG. NO.	MATERIAL	REPAIR FIG. NO.
17	AND 10136-2401 7075-T6		0.032 CLAD 7075-T6		BAC1505-18884 7075-T6	
18	BAC1505-100246 7075-T6		0.025 CLAD 7075-T6		AND 10136-2004 7075-T6	
19			BAC1518-338 7075-T6			
20			BAC1493-577 CLAD 7075-T6			
21			0.050 CLAD 2024-T3			
22			BAC1513-295 2024-T4			
23	AND 10134-1205 2024-T3		0.050 CLAD 7075-T6		BAC1506-1774 7075-T6	
24	AND 10134-1205 2024-T3		0.050 CLAD 7075-T6		BAC1506-1238 7075-T6	
25	AND 10133-1204 2024-T3		0.071 CLAD 7075-T6		BAC1505-100428 7075-T6	
26			BAC1518-402 7075-T6			
27	AND 10134-1601 7075-T6		0.032 CLAD 7075-T6		AND 10134-2007 7075-T6	
28	AND 10133-1002 7075-T6		0.036 CLAD 7075-T6		AND 10136-2005 7075-T6	
29	BAC1505-100096 7075-T6				BAC1505-100257 7075-T6	
30			0.040 CLAD 7075-T6		BAC1505-100548 7075-T6	
31			0.125 7075-T6 DBLR			
32					BAC1505-100257 7075-T6	

Main Cabin Floor Beams and Seat Tracks - Material Identification
Figure 7 (Sheet 2)

ITEM	UPPER CHORD		WEB OR FORMED SECTION		LOWER CHORD	
	MATERIAL	REPAIR FIG. NO.	MATERIAL	REPAIR FIG. NO.	MATERIAL	REPAIR FIG. NO.
33	BAC1506-1108 7075-T6				BAC1505-100257 7075-T6	
34			0.040 CLAD 7075-T6		BAC1505-100257 7075-T6	
35			0.090 7075-T6 DBLR			
36			BAC1509-100241 7075-T6			
37			BAC1504-8207 7075-T6			
38			0.025 CLAD 7075-T6 DBLR			
39	AND10136-2004 2024-T3		0.040 CLAD 7075-T6		AND10136-1403 2024-T3	
40			BAC1518-399 7075-T6			
41			AND10140-1204 7075-T6			
42	BAC1520-792 7178-T6	53-10-5 Fig. 2, Fig. 3				
43	BAC1520-1342 7178-T6					
44	BAC1520-841 7178-T6	53-10-5 Fig. 1				
45	BAC1520-1417 7178-T6					
46	BAC1520-1430 EXTR 7178-T6511	53-10-5 Fig. 7				
47	BAC1520-1434 EXTR 7178-T6511	53-10-5 Fig. 8				

Main Cabin Floor Beams and Seat Tracks - Material Identification
Figure 7 (Sheet 3)

ITEM	UPPER CHORD		WEB OR FORMED SECTION		LOWER CHORD	
	MATERIAL	REPAIR FIG. NO.	MATERIAL	REPAIR FIG. NO.	MATERIAL	REPAIR FIG. NO.
48	BAC1520-1431 EXTR 7178-T6511					
49	BAC1520-1432 EXTR 7178-T6511	53-10-5 Fig. 8				
50	BAC1520-1429 EXTR 7178-T6511	53-10-5 Fig. 1				
51	BAC1520-1433 EXTR 7178-T6511	53-10-5 Fig. 9				
52	AND10134-1403 7075-T6511		0.040 CLAD 7075-T6		AND10134-1403 7075-T6511	
53			0.050 2024-T4 OR -T42			
54			0.050 CLAD 7075-T6			
55			0.063 2024-T4 OR -T42			
56			PLASTIC, GLASS FABRIC REIN-FORCED PHENOLIC LAMINATE			
57					AND10140-2002 EXTR 7075-T6511	
58					BAC1514-1679 EXTR 7178-T6511	
59			0.063 CLAD 2024-T3			
60	BAC1506-714 EXTR 7075-T6					

Main Cabin Floor Beams and Seat Tracks - Material Identification
Figure 7 (Sheet 4)

ITEM	UPPER CHORD		WEB OR FORMED SECTION		LOWER CHORD	
	MATERIAL	REPAIR FIG. NO.	MATERIAL	REPAIR FIG. NO.	MATERIAL	REPAIR FIG. NO.
61	BAC1520-1331 EXTR 7178-T6511	53-10-5 Fig. 10				
62	BAC1520-792 7178-T6511	53-10-5 FIG.2,3				
63	BAC1520-1417 7178-T6511	53-10-5 FIG. 1				
64	BAC1520-841 7178-T6511	53-10-5 FIG. 1				
65	BAC1520-1342 7178-T6511					
66	PANEL 0.050 CLAD 2024-T3					
67	MACHINED WEB 0.250 2024-T351					
68			7075-T411 FORGING HT-T73			
69	BAC1505-45585 2024-T3511					
70	AND10136-2004 2024-T3511		0.040 CLAD 7075-T6		AND10134-1403 2024-T3511	
71			BAC1518-431 7075-T6511			
72			BAC1513-295 2024-T3511			
73	AND10134-1205 7075-T6511		0.040 CLAD 7075-T6		AND10134-1403 7075-T6511	
74			BAC1518-399 7075-T6511			

Main Cabin Floor Beams and Seat Tracks - Material Identification
Figure 7 (Sheet 5)

ITEM	INBOARD CHORD		WEB OR FORMED SECTION		OUTBOARD CHORD	
	MATERIAL	REPAIR FIG. NO.	MATERIAL	REPAIR FIG. NO.	MATERIAL	REPAIR FIG. NO.
75			0.056 CLAD 7075-T6			
76					AND10134-1205 7075-T6511	
77			0.071 CLAD 7075-T6			
78			BAC1518-615 7075-T6511			
79	BAC1510-350 2024-T3511					
80	BAC1489-234 CLAD 7075-T6					
81	BAC1503-1000 16 7075-T6511		0.071 + 0.032 CLAD 7075-T6 BONDED		BAC1505-100639 7075-T6511	
82	BAC1503-1000 16 7075-T6511		0.071 + 0.032 CLAD 7075-T6 BONDED		AND10136-2405 7075-T6511	
83					BAC1518-690 7075-T73	
84			BAC1520-792 7178-T6511			
85			BAC1518-615 7075-T6511			
86			MACHINED TRACK 7075-T7351			
87			BAC1493-577 CLAD 7075-T6			
88			BAC1505-100403 7075-T6511			
89			0.040 CLAD 7075-T6			

Main Cabin Floor Beams and Seat Tracks - Material Identification
Figure 7 (Sheet 6)

ITEM	INBOARD CHORD		WEB OR FORMED SECTION		OUTBOARD CHORD	
	MATERIAL	REPAIR FIG. NO.	MATERIAL	REPAIR FIG. NO.	MATERIAL	REPAIR FIG. NO.
90			AND 10136-2001 7075-T6511			
91			BAC1506-43 7075-T6511			
92			BAC1493-114 CLAD 7075-T6			
93			AND 10133-1001 7075-T6511			
94			BAC1493-100096 7075-T6511			
95			BAC1490-2760 CLAD 7075-T6			
96	BAC1510-350 7075-T6511		0.040 CLAD 2024-T3		AND 10136-2001 7075-T6511	
97			0.050 CLAD 7075-T6			
98			BAC1506-1500 7075-T6511			
99			BAC1518-638 7075-T73511			
100			BAC1518-638 7050-T76511			
101	BAC1503-100016 7075-T73511		0.050 CLAD 7075-T6		BAC1506-1774 7075-T73511	
102	AND10134-2003 7075-T73511		0.050 CLAD 7075-T6		BAC1506-1774 7075-T73511	
103	BAC1503-100279 7075-T73511		0.050 CLAD 7075-T6		BAC1506-1238 7075-T73511	
104	AND10136-2405 7075-T73511		0.071 CLAD 7075-T6		BAC1506-2483 7075-T73511	

Main Cabin Floor Beams and Seat Tracks - Material Identification
Figure 7 (Sheet 7)

ITEM	INBOARD CHORD		WEB OR FORMED SECTION		OUTBOARD CHORD	
	MATERIAL	REPAIR FIG. NO.	MATERIAL	REPAIR FIG. NO.	MATERIAL	REPAIR FIG. NO.
105	BAC1505-100547 7075-T73511		0.050 CLAD 7075-T6		BAC1506-1774 7075-T73511	
106	BAC1505-100547 7075-T73511		0.050 CLAD 7075-T6		BAC1506-1238 7075-T73511	
107	BAC1503-100342 7075-T73511		0.071 CLAD 7075-T6		BAC1506-2483 7075-T73511	
108	BAC1503-100398 2024-T3511		0.050 CLAD 7075-T6		BAC1506-1774 7075-T6511	
109	AND10134-3006 2024-T3511		0.050 CLAD 7075-T6		BAC1505-101060 OR BAC1506-2427 7075-T73511	
110			BAC1518-399 7050-T76511			
111	0.071 CLAD 7075-T6					
112	BAC1503-11337 7075-T73511					
113	BAC1503-11178 7075-T73511					
114	AND10133-3002 7075-T73511				BAC1506-1238 7075-T73	
115					BAC 1506-2427 7075-T73511	
116			BAC1490-2774 7075-T6			
117			AND10133-1001 7075-T6511			
118			BAC1504-2583 7075-T6511			

Main Cabin Floor Beams and Seat Tracks - Material Identification
Figure 7 (Sheet 8)

ITEM	UPPER CHORD		WEB OR FORMED SECTION		LOWER CHORD	
	MATERIAL	REPAIR FIG. NO.	MATERIAL	REPAIR FIG. NO.	MATERIAL	REPAIR FIG. NO.
119	BAC1505-100186 7075-T76511		0.025 CLAD 7075-T6		AND10136-2004 7075-T6	
120	BAC1505-100186 7075-T6511		0.025 CLAD 7075-T6		AND10136-2004 7075-T6	
121			AND10137-1309 7075-T6			
122	0.071 7075-T6					
123					BAC1503-100163 7075-T651	
124			0.125 7075-T6			
125			0.125 7075-T6			
126	0.125 7075-T6					
127	0.125 7075-T6					
128	0.125 7075-T6					
129	0.071 7075-0					
130			0.050 7075-T6			

Main Cabin Floor Beams and Seat Tracks - Material Identification
Figure 7 (Sheet 8A)

BOEING PROPRIETARY - Copyright © - Unpublished Work - See title page for details.

	INBOARD CHORD		WEB OR FORMED SECTION		OUTBOARD CHORD	
ITEM	MATERIAL	REPAIR FIG. NO.	MATERIAL	REPAIR FIG. NO.	MATERIAL	REPAIR FIG. NO.
131			0.040 7075-T6			
132					BACS1503-100398 7075-T6511	
133	BAC1505-100361 7075-T6511					
134	BAC1505-100361 7050-T76511					
135	BAC1505-100403 7050-T76511					
136	BAC1506-43 7050-T76511					
137	BAC1503-100096 7050-T76511					
138	BAC1505-100403 7075-T6511					
139	BAC1506-43 7075-T6511					
140			0.040 CLAD 7075-T6			
141			0.040 CLAD 7075-T6			
142	BAC1503-100096 7075-T6511					
143	BAC1490-2760 CLAD 7075-T6					
144	BAC1490-2760 CLAD 7075-T6					
145			0.071 CLAD 7075-T6			
146					BAC1514-2320 7075-T7611	
147					BAC1514-2320 TI-6AL-AV	

Main Cabin Floor Beams and Seat Tracks - Material Identification
Figure 7 (Sheet 8B)

BOEING PROPRIETARY - Copyright © - Unpublished Work - See title page for details.

NOTES

[A] FOR AIRPLANES WITHOUT PROVISION FOR AFT BODY FUEL

[B] FOR AIRPLANES WITH PROVISION FOR AFT BODY FUEL

[C] DELETED

[D] DELETED

[E] FOR CUM LINE NUMBERS:
1 THRU 25

[F] FOR CUM LINE NUMBERS:
26 AND ON

[G] FOR CUM LINE NUMBERS:
246, 247

[H] FOR CUM LINE NUMBERS:
290

[J] DELETED

[K] FOR CUM LINE NUMBERS:
302, 303, 305 THRU 308, 310 AND ON

[L] DELETED

[M] FOR 737-200C AIRPLANES

FOR 737-200 PASSENGER AIRPLANES

[O] FOR CUM LINE NUMBERS:
463, 464, 474, 475 491, 492, 674, 683, 691, 692

FOR PASSENGER AIRPLANES

FOR CARGO AIRPLANES THRU CUM LINE NUMBER 486

[R] FOR CARGO AIRPLANES CUM LINE NUMBERS:
513 AND ON

[S] FOR CUM LINE NUMBERS THRU 503

[T] FOR CUM LINE NUMBERS:
504 AND ON AND AIRPLANES WITH SB 57-1106 INCORPORATED

[U] FOR CUM LINE NUMBERS:
612, 624

[V] FOR CUM LINE NUMBERS:
669, 670, 677, 686, 694, 703, 712, AND 719

[W] FOR ALL AIRPLANES EXCEPT CUM LINE NUMBERS:
649, 657, 694, 695, 701, 703, 704, 714, 715, 720, 721, 726, 727, 734, 735, 744, 745, 752, 754, 762, 764, 769, 772, 774, 777, 781, 783, 788, 790, 791, 792, 793, 795, 797, 808, 838, 840, 848, 1075, 1078, 1079, 1082, 1085, 1089 (BOEING REF: PK939-PK970, PK975-PK999)

[X] FOR CUM LINE NUMBERS:
649, 657, 694, 695, 701, 703, 704, 714, 715, 720, 721, 726, 727, 734, 735, 744, 745, 752, 754, 762, 763, 764, 769, 772, 773, 774, 777, 781, 783, 788, 790, 791, 792, 793, 795, 797, 808, 815, 824, 829, 838, 840, 848, 1075, 1078, 1079, 1082, 1085, 1089 (BOEING REF: PK939-PK970, PK975-PK999, PL507-PL550)

[Y] FOR CUM LINE NUMBERS:
744, 839, 841, 849 (BOEING REF: PK975-PK999)

[Z] FOR CUM LINE NUMBERS:
822, 1120, 1453 (BOEING REF: PL748-PL755)

[AA] FOR CUM LINE NUMBERS:
919, 927

[AB] FOR CUM LINE NUMBERS:
917, 922 (BOEING REF: PN003-PN020)

Main Cabin Floor Beams and Seat Tracks - Material Identification
Figure 7 (Sheet 8C)

NOTES (CONT)

AC FOR CUM LINE NUMBERS:
951

AD FOR CUM LINE NUMBERS:
930, 936, 937, 939, 941, 943, 944, 948, 952, 958, 959, 971, 1135, 1256, 1267, 1397, 1426 (BOEING REF: PN 118-PN 130)

AE FOR CUM LINE NUMBERS:
989, 992

AF BOEING REF: PY058-PY080

AG FOR CUM LINE NUMBERS:
991, 993 THRU 999, 1001, 1003, 1004

AH FOR CUM LINE NUMBERS:
1056 THRU 1453, 1486 (BOEING REF: P4341 THRU P4399, P4801 THRU P5499)

AI FOR CUM LINE NUMBERS:
1040, 1042, 1046, 1113 (BOEING REF: P8979 THRU P9995)

AJ FOR CUM LINE NUMBERS:
823 AND ON EXCEPT AIRPLANES LISTED IN AH AND AI

AK FOR CUM LINE NUMBERS:
1 THRU 822 WITH SB 53-1061 INCORPORATED

AL FOR CUM LINE NUMBERS:
1093, 1097, 1099 (BOEING REF: PM284-PM299)

AM FOR CUM LINE NUMBERS:
928, 951, 975, 989, 992, 1002, 1025, 1032, 1034, 1036, 1040, 1042, 1046, 1113 (BOEING REF: P8979-P9995) AND AIRPLANES WITH SB 53-1070 INCORPORATED

AN FOR CUM LINE NUMBERS:
1 THRU 848 WITH SB 53-1061R1 INCORPORATED

AO FOR AIRPLANES WITH SB 737-53-1090 INCORPORATED

AP FOR CUM LINE NUMBERS:
1075, 1078, 1079, 1082, 1085, 1089 (BOEING REF: PK933-PK970, PK975-PK999, PL633-PL650)

AQ FOR CUM LINE NUMBERS:
649, 657, 694, 701, 703, 704, 714, 715, 720, 721, 726, 727, 734, 735, 744, 745, 752, 754, 762, 764, 769, 772, 774, 777, 781, 783, 788, 790, 791, 793, 795, 797, 808, 838, 840, 848, 910, 919 (BOEING REF: PK901-PK932, PK971-PK974, PL631-PL632)

AR FOR ALL AIRPLANES NOT LISTED IN AP AND AQ

AS FOR CUM LINE NUMBERS:
539 THRU 1585 (BOEING REF: P3785-P4399, P4501-P8499, P8942-P9995)

AT FOR AIRPLANES WITH SB 737-57-1139 INCORPORATED

AU FOR AIRPLANES NOT LISTED IN AT

AV FOR CUM LINE NUMBERS:
1313, 1405, 1415

AW FOR CUM LINE NUMBERS:
1 THRU 1585 WITH SB 737-57-1210 INCORPORATED

AX FOR CUM LINE NUMBERS:
1 THRU 999

AY FOR CUM LINE NUMBERS:
1000 THRU 1585

AZ FOR CUM LINE NUMBERS:
1 THRU 228

Main Cabin Floor Beams and Seat Tracks - Material Identification
Figure 7 (Sheet 8D)

NOTES (CONT)

BA FOR CUM LINE NUMBERS:
229 THRU 1585

BB FOR CUM LINE NUMBERS:
1 THRU 310, 323

BC FOR AIRPLANES NOT LISTED IN BB OR IN BD

BD FOR AIRPLANES WITH BASIC EFFECTIVITIES:
P0031 THRU P0899, P0911 THRU P2499,
P2831 THRU P3499

Main Cabin Floor Beams and Seat Tracks - Material Identification
Figure 7 (Sheet 8E)

EFFECTIVITY
737-100 AIRPLANES
737-200 AIRPLANES

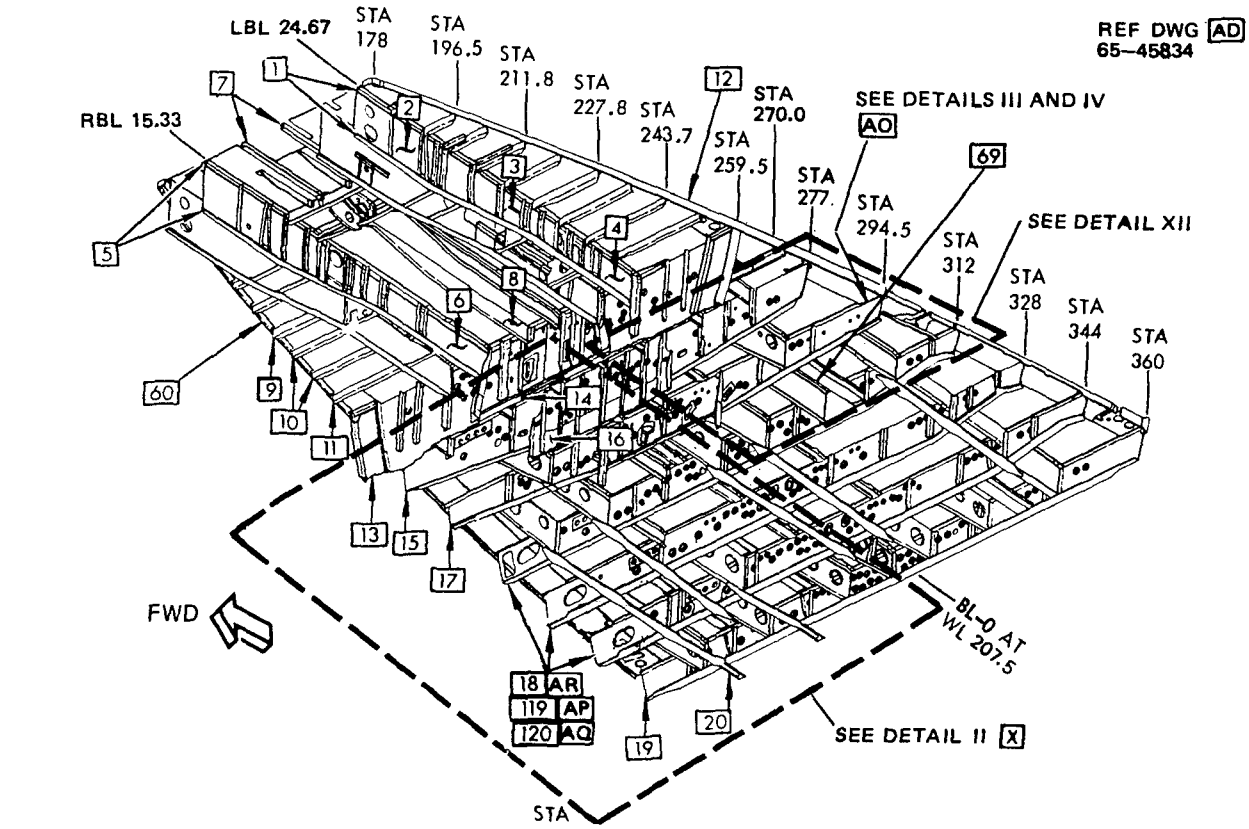

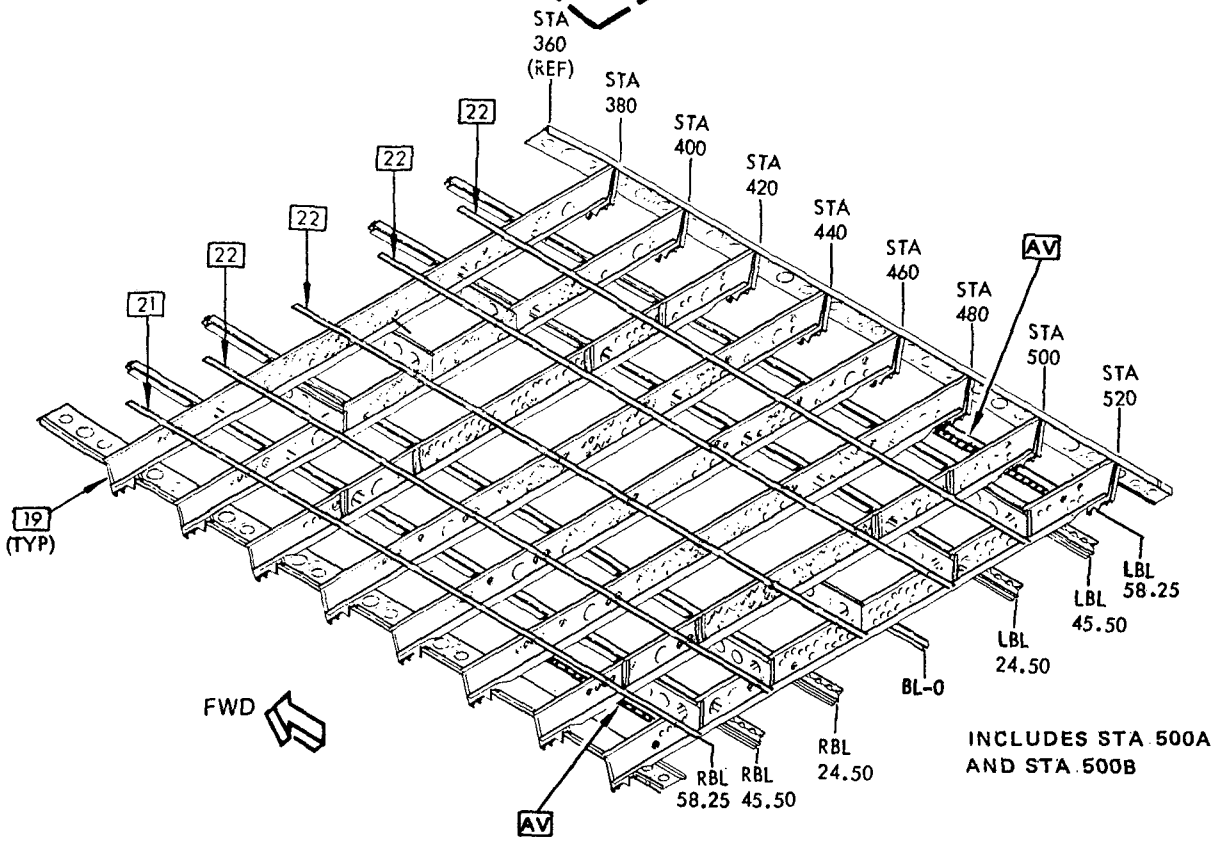

VIEW LOOKING UP AND AFT
DETAIL I

Main Cabin Floor Beams and Seat Tracks - Material Identification
Figure 7 (Sheet 8F)

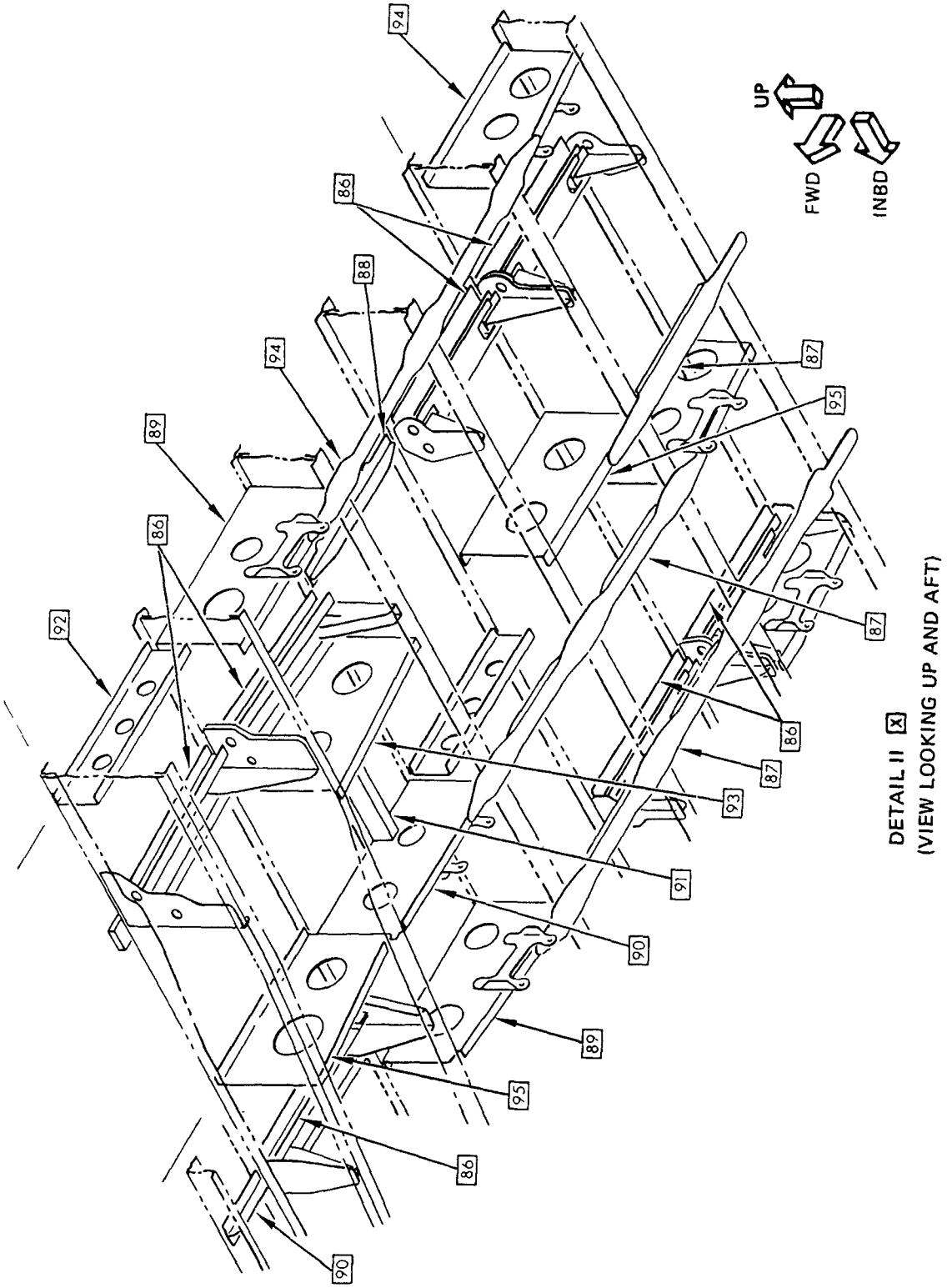

Main Cabin Floor Beams and Seat Tracks - Material Identification
Figure 7 (Sheet 8G)

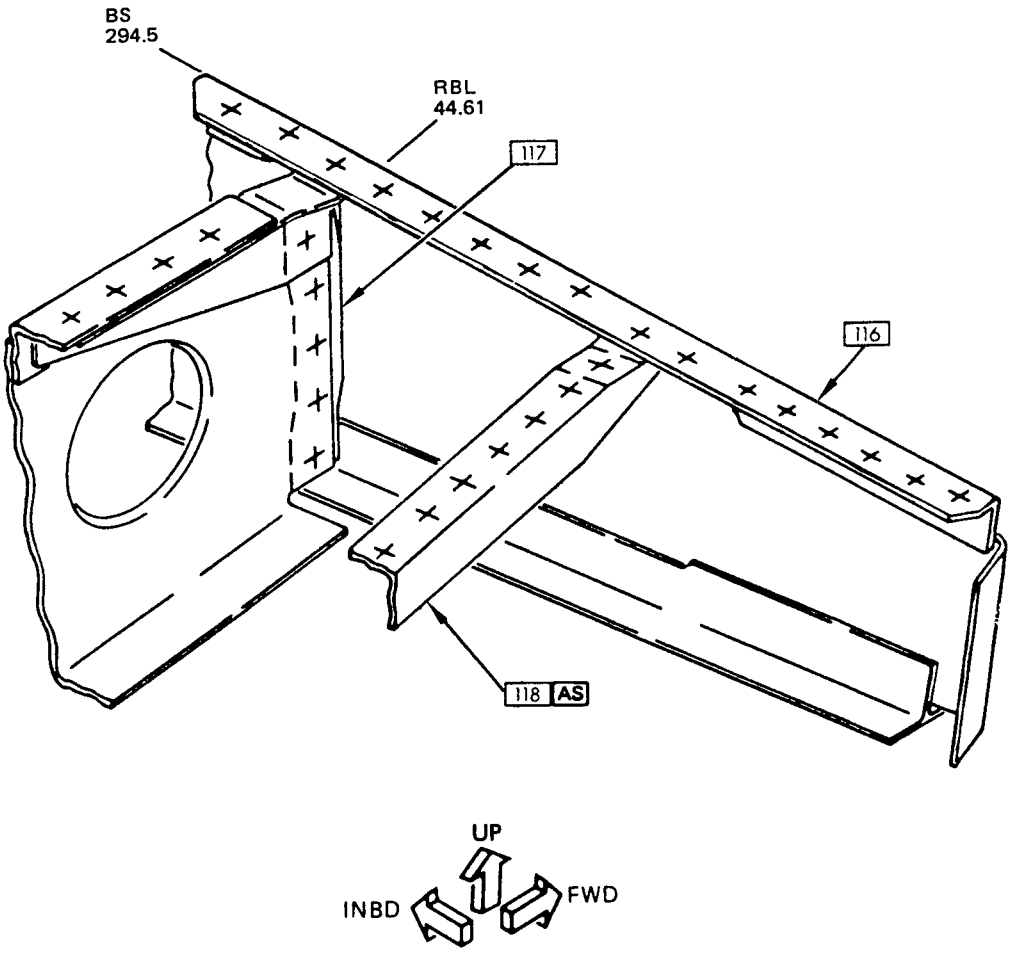

DETAIL III AO

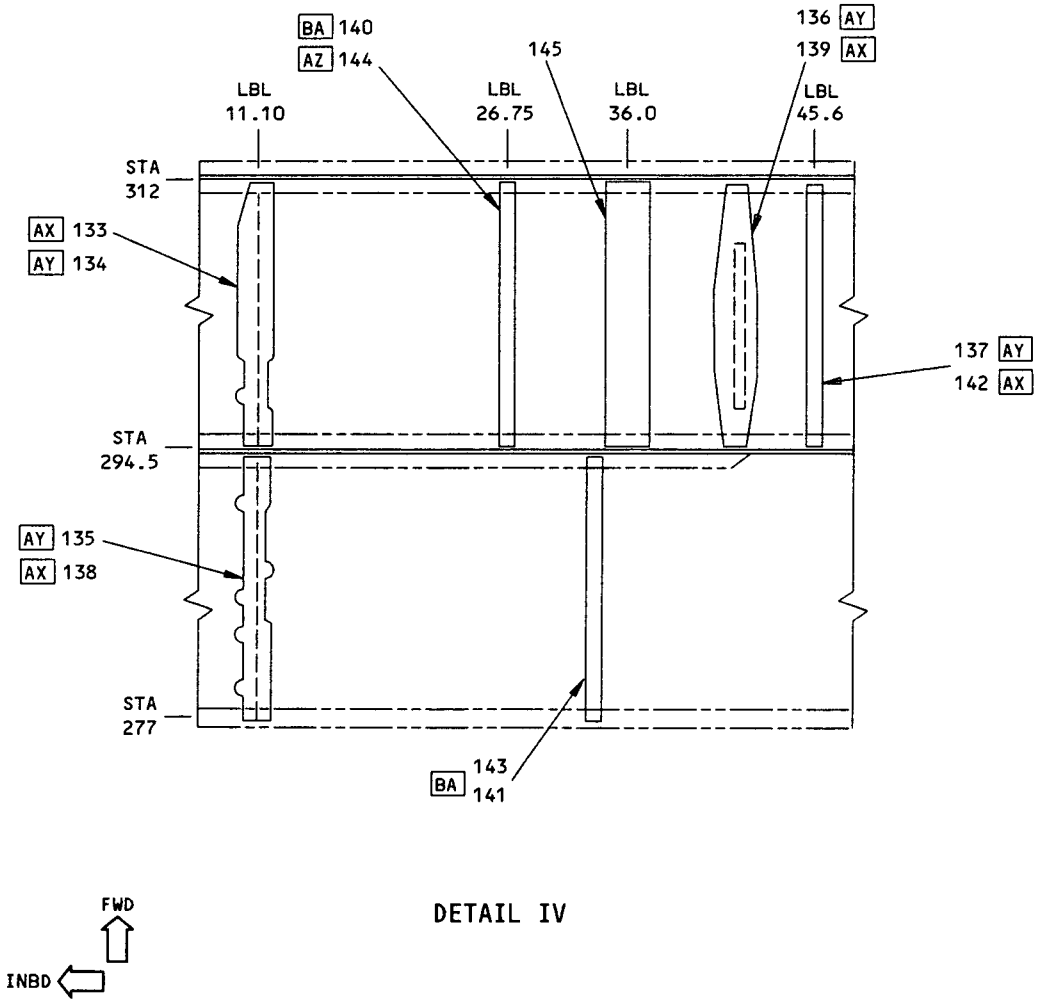

DETAIL IV

Main Cabin Floor Beam and Tracks - Material Identification
Figure 7 (Sheet 9)

BOEING PROPRIETARY - Copyright © - Unpublished Work - See title page for details.

REF DWG
65-67140
65-46536
65-46537
65-46538
65-46540

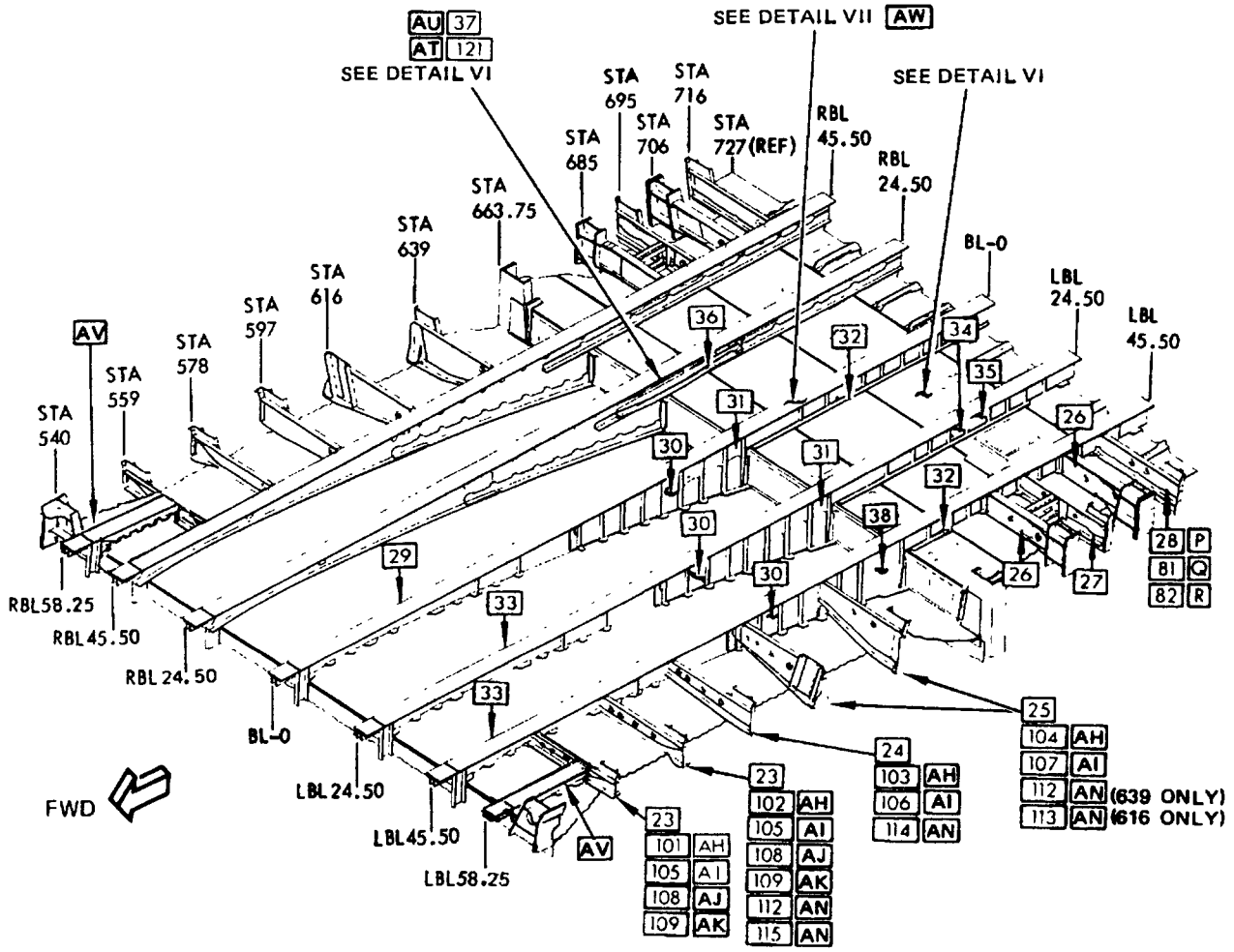

LEFT SIDE VIEW LOOKING DOWN AND TOWARDS REAR OF AIRPLANE

DETAIL V

Main Cabin Floor Beams and Seat Tracks - Material Identification
Figure 7 (Sheet 10)

BOEING PROPRIETARY - Copyright © - Unpublished Work - See title page for details.

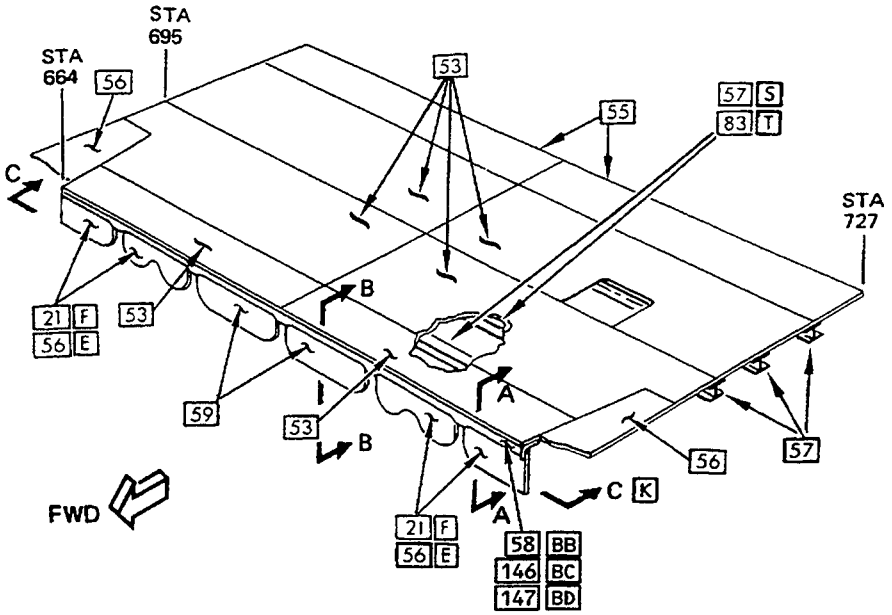

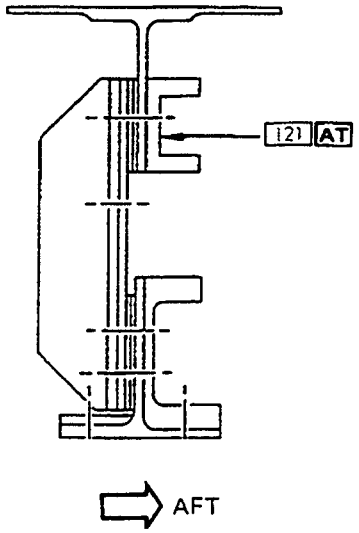

SECTION A–A

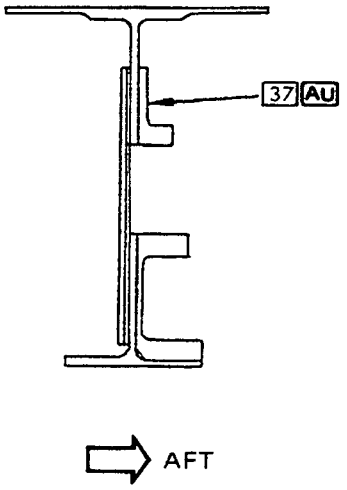

SECTION B–B

PRESSURE FLOOR
DETAIL VI

Main Cabin Floor Beams and Seat Tracks - Material Identification
Figure 7 (Sheet 11)

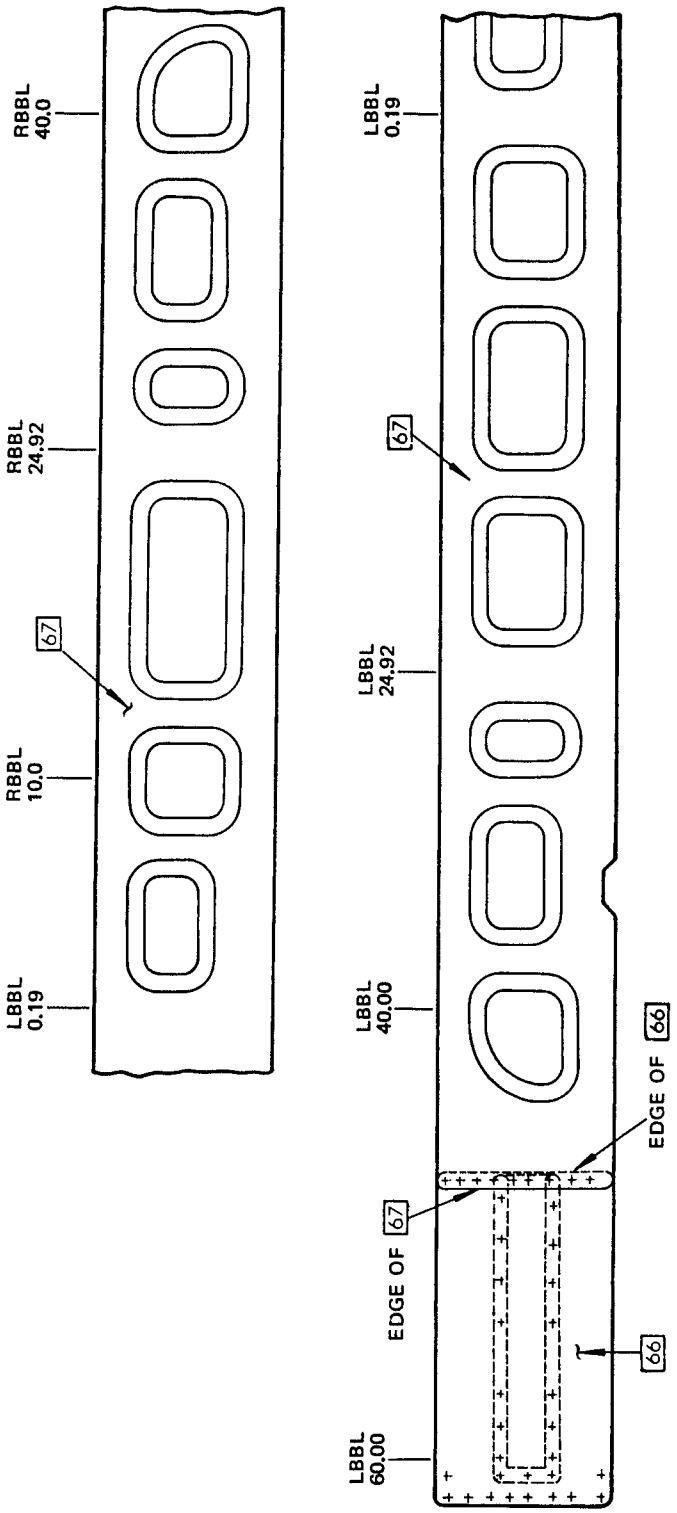

PRESSURE FLOOR INSTALLATION – STA 664 TO STA 727 K
SECTION C–C

Main Cabin Floor Beams and Seat Tracks - Material Identification
Figure 7 (Sheet 12)

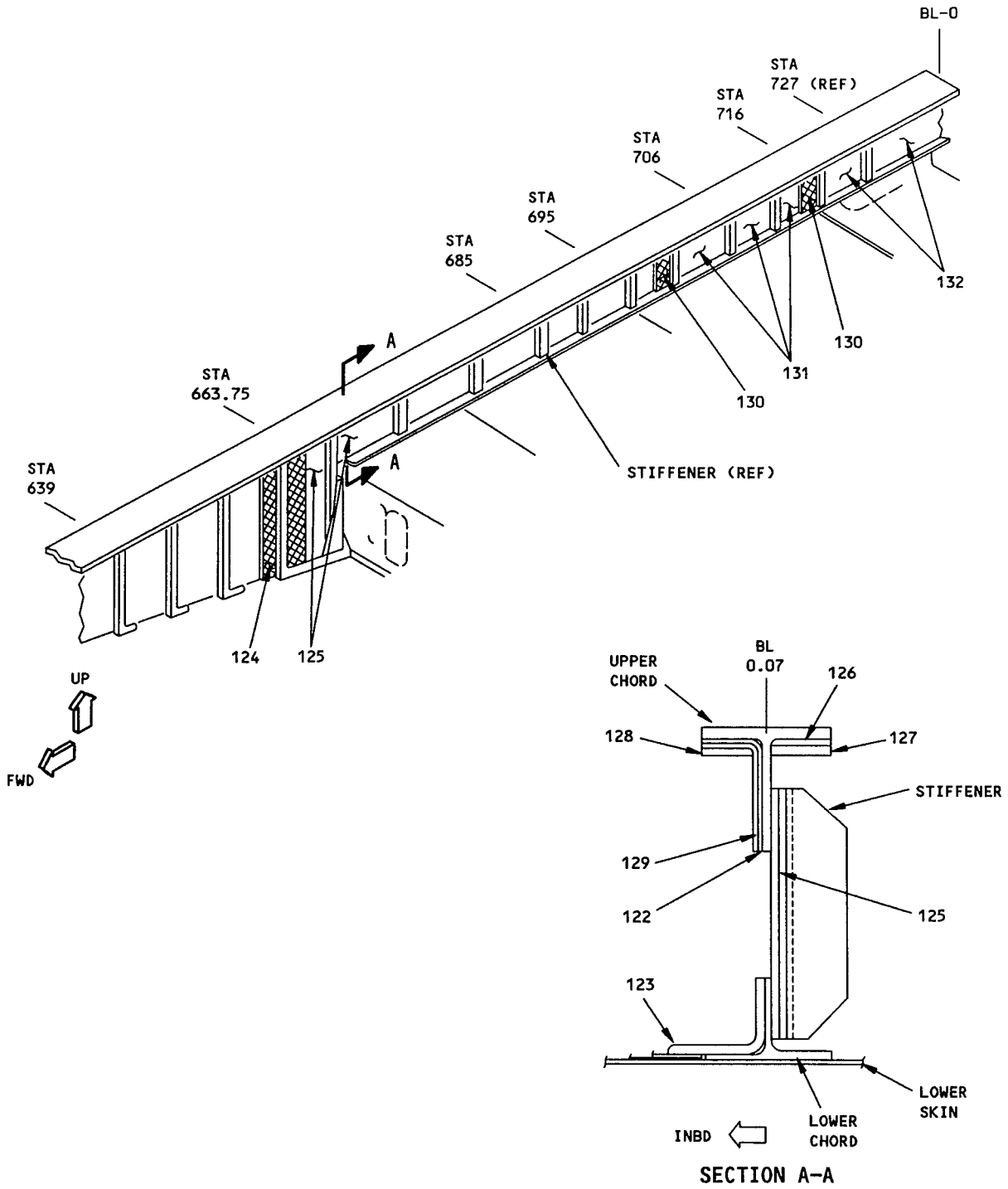

SECTION A-A

DETAIL VII AW

Main Cabin Floor Beam and Tracks - Material Identification
Figure 7 (Sheet 13)

EFFECTIVITY
737-100

REF DWG
65-73746
65-67316 AD
65C10592 AD

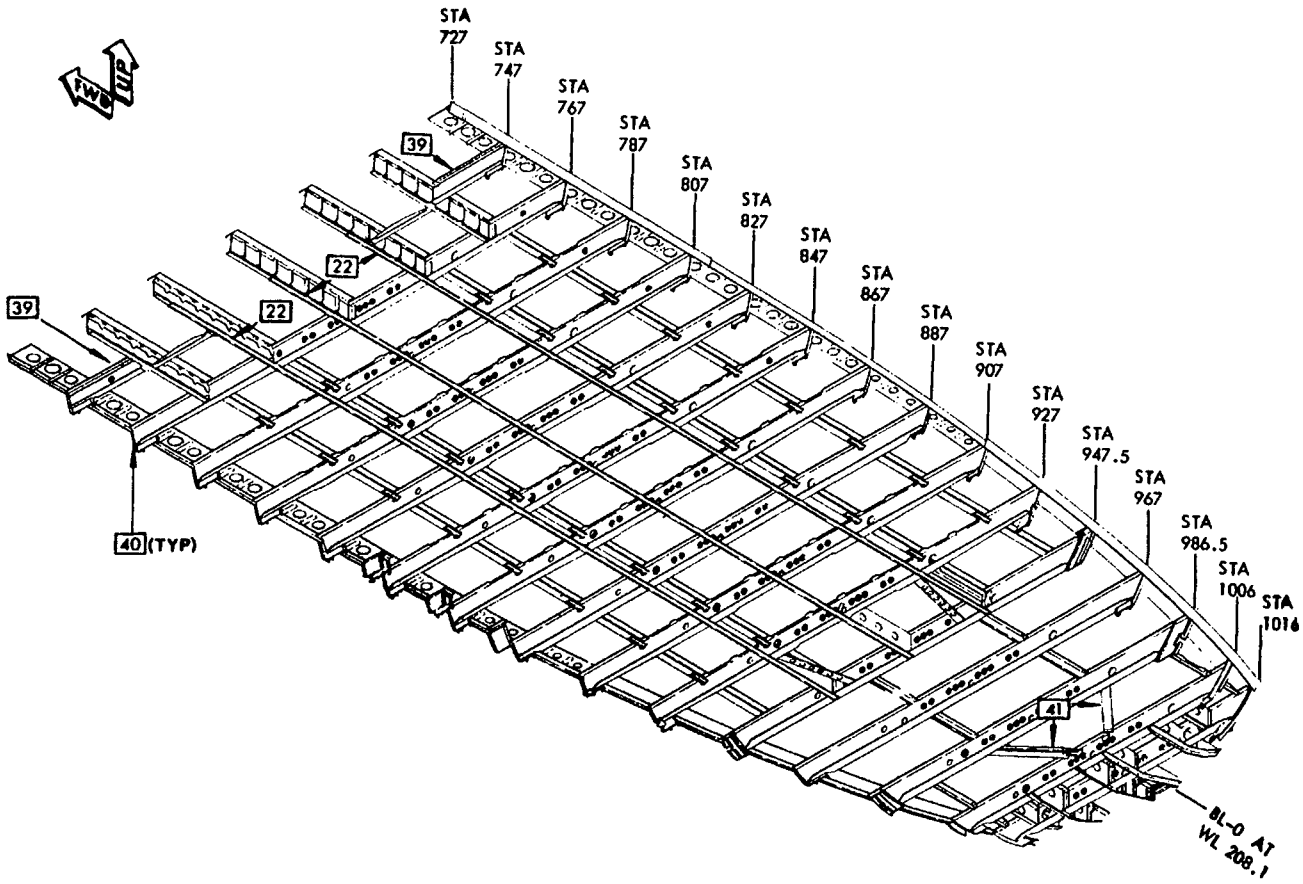

DETAIL VIII

Main Cabin Floor Beams and Seat Tracks - Material Identification
Figure 7 (Sheet 14)

EFFECTIVITY
737-200

REF DWG
65-73746
65-46816

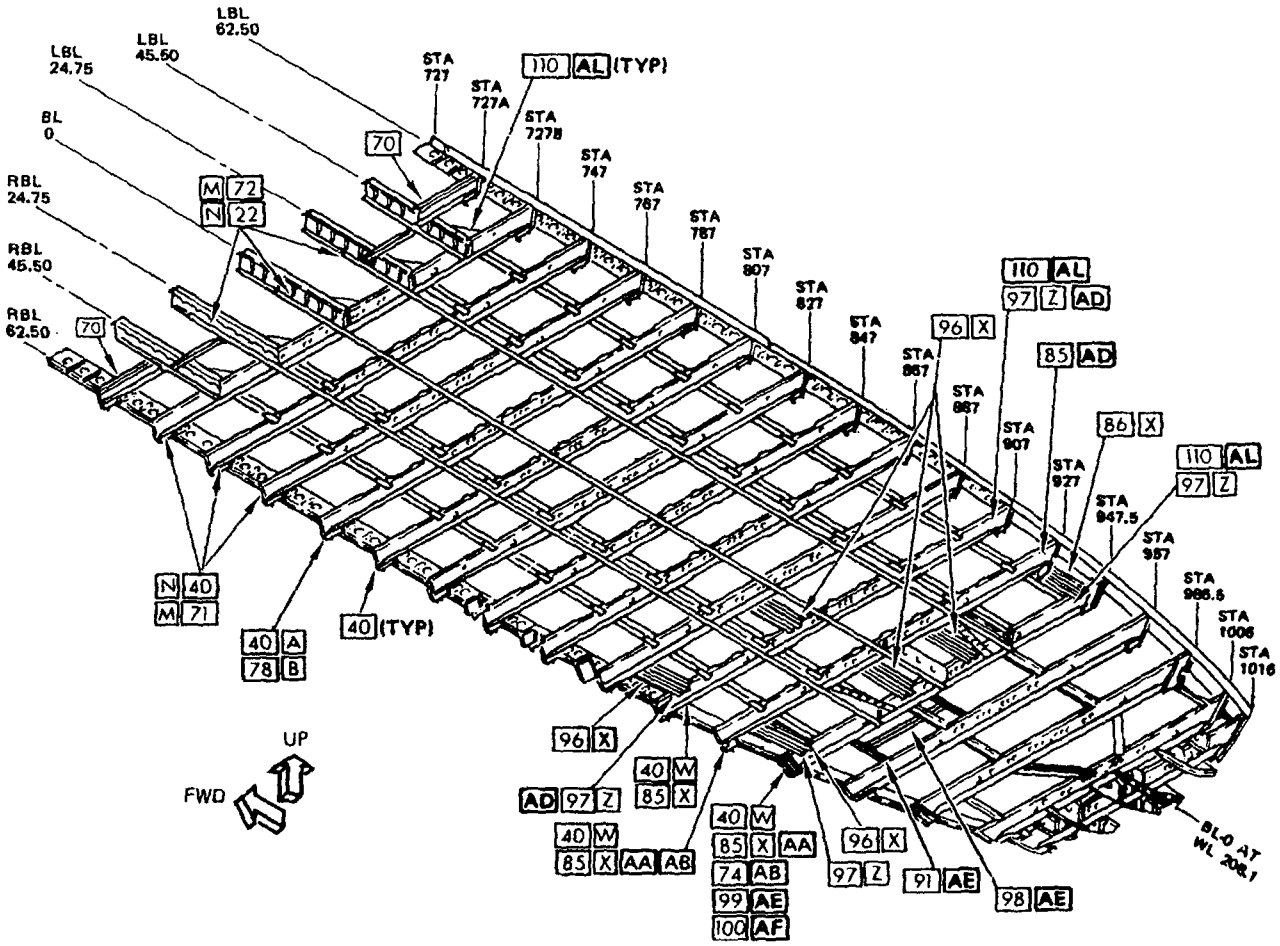

NOTE: SEE DETAIL X FOR ADDITIONAL STRUCTURE BETWEEN STA 727 AND STA 787 FOR AIRPLANES WITH AFT BODY FUEL PROVISION.

DETAIL IX

Main Cabin Floor Beams and Seat Tracks - Material Identification
Figure 7 (Sheet 15)

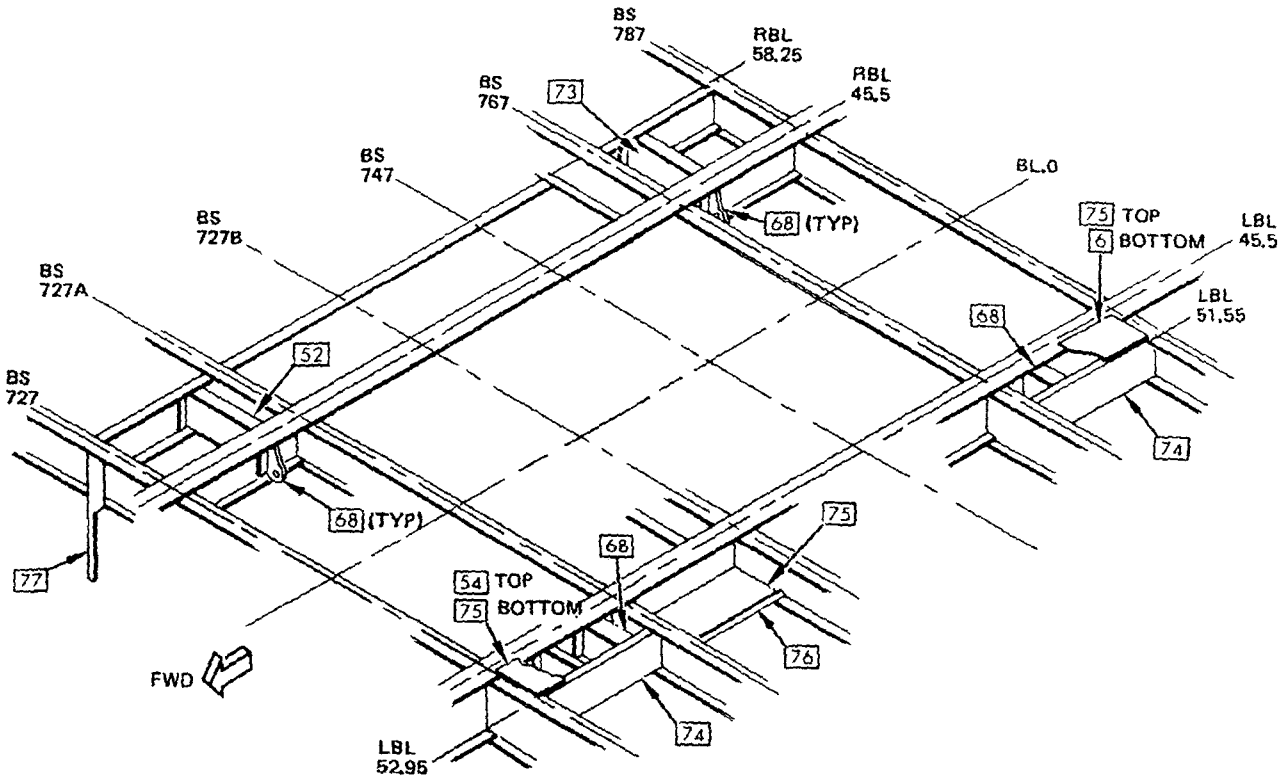

(FOR AIRPLANES WITH PROVISION FOR 810 GALLON AFT BODY FUEL ONLY)

DETAIL X

Main Cabin Floor Beams and Seat Tracks - Material Identification
Figure 7 (Sheet 16)

REF DWG
65-46814
65-46816

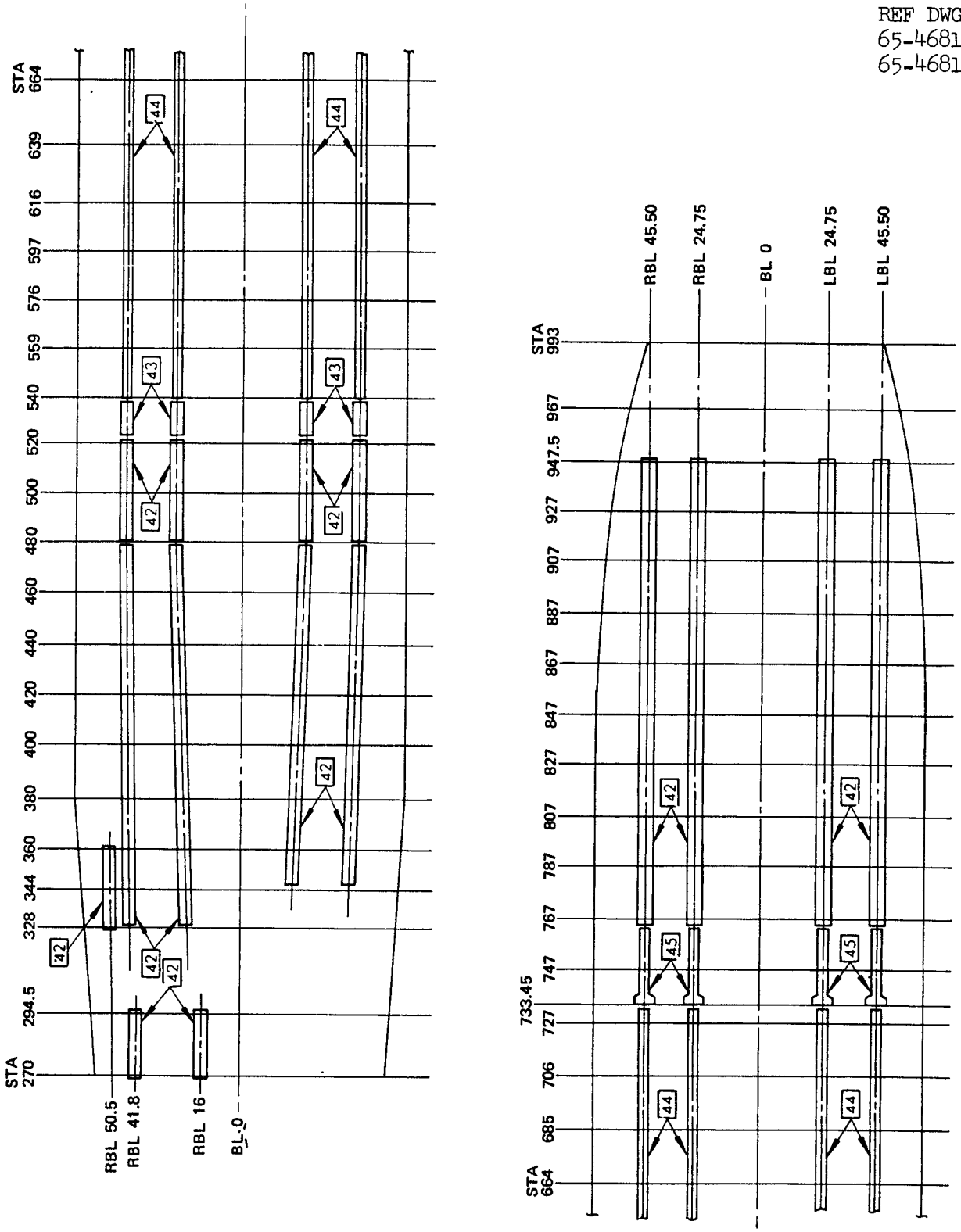

DETAIL XI

Main Cabin Floor Beams and Seat Tracks - Material Identification
Figure 7 (Sheet 17)

EFFECTIVITY
-200 AIRPLANES

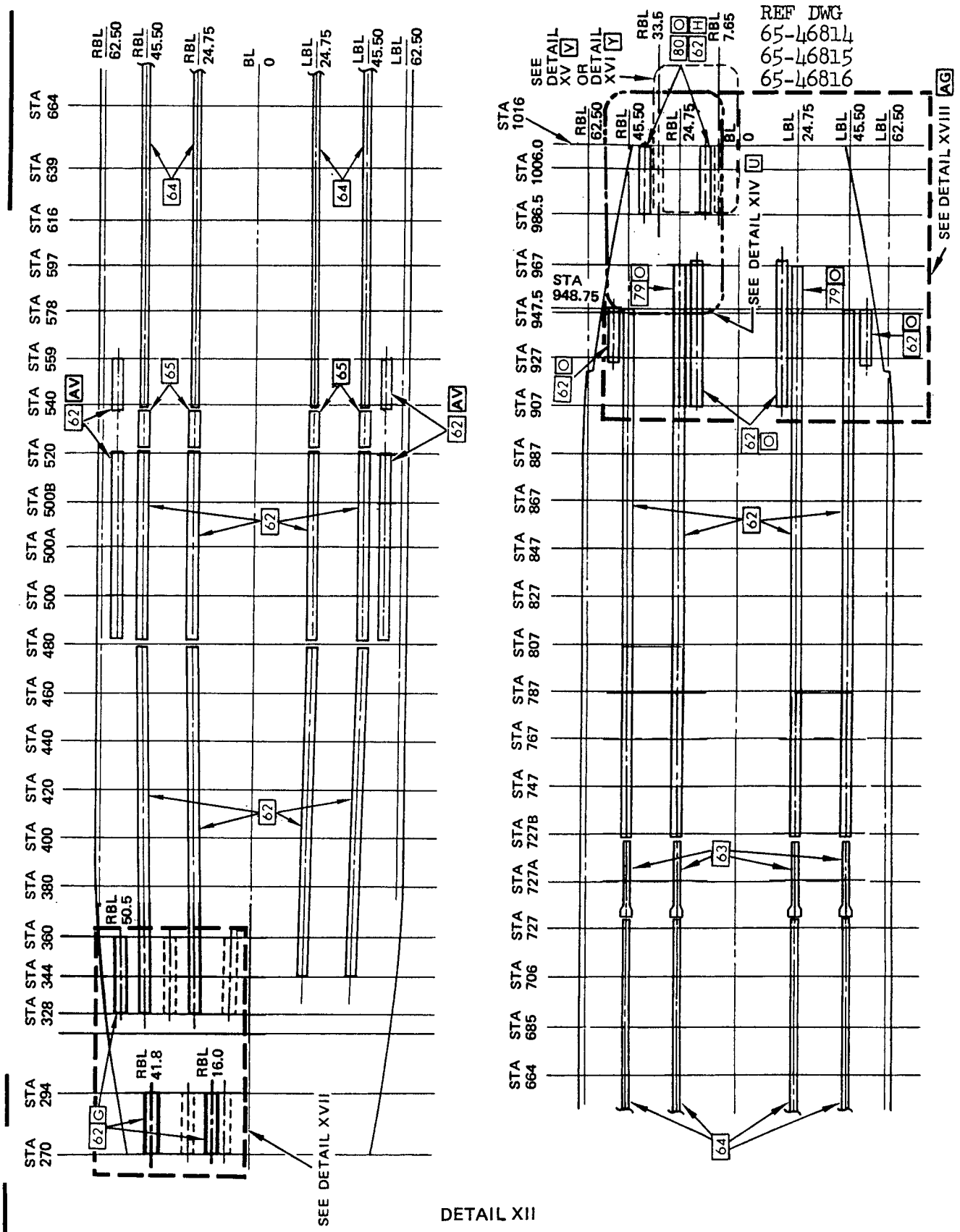

DETAIL XII

Main Cabin Floor Beams and Seat Tracks - Material Identification
Figure 7 (Sheet 18)

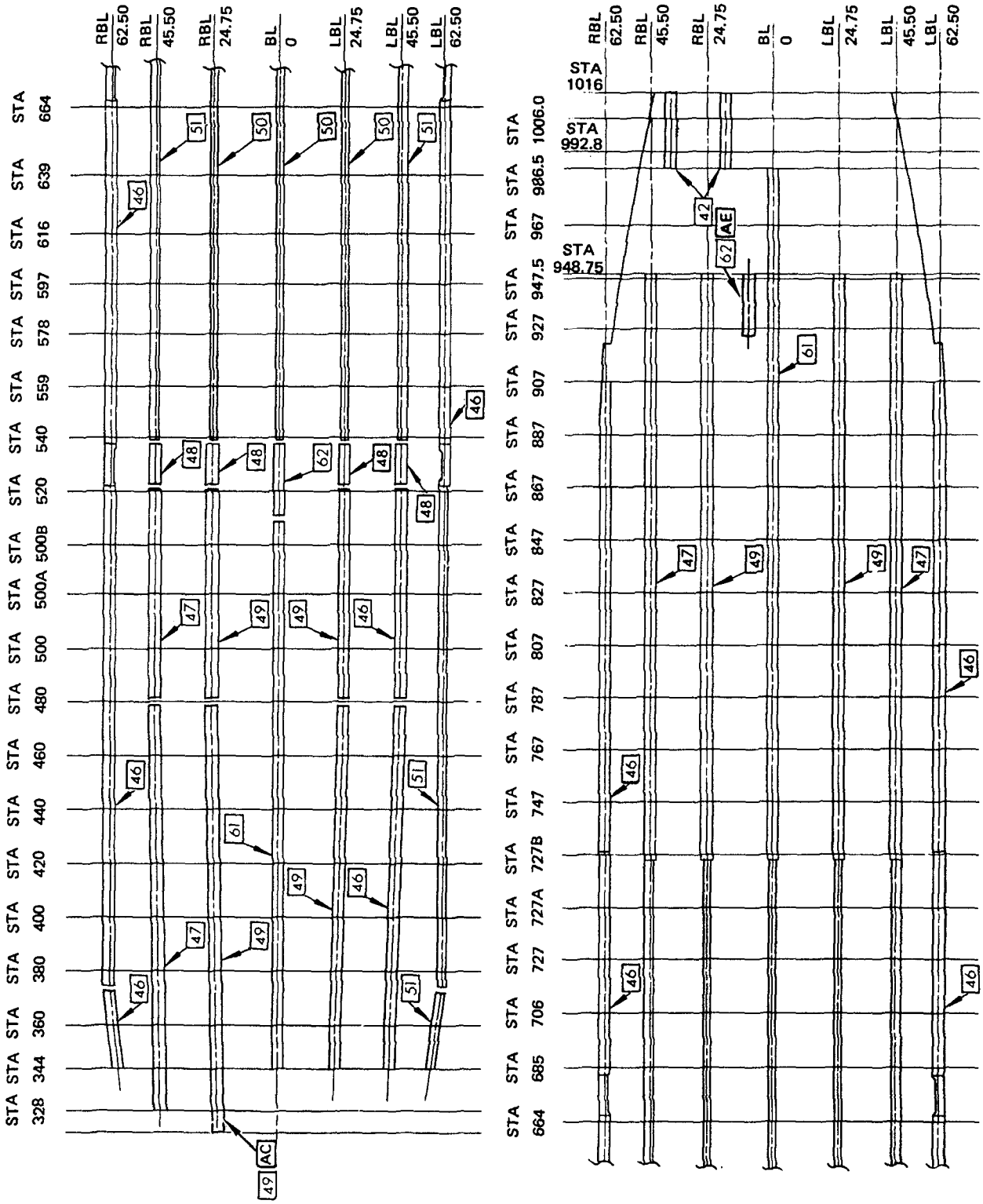

DETAIL XIII

Main Cabin Floor Beams and Seat Tracks - Material Identification
Figure 7 (Sheet 19)

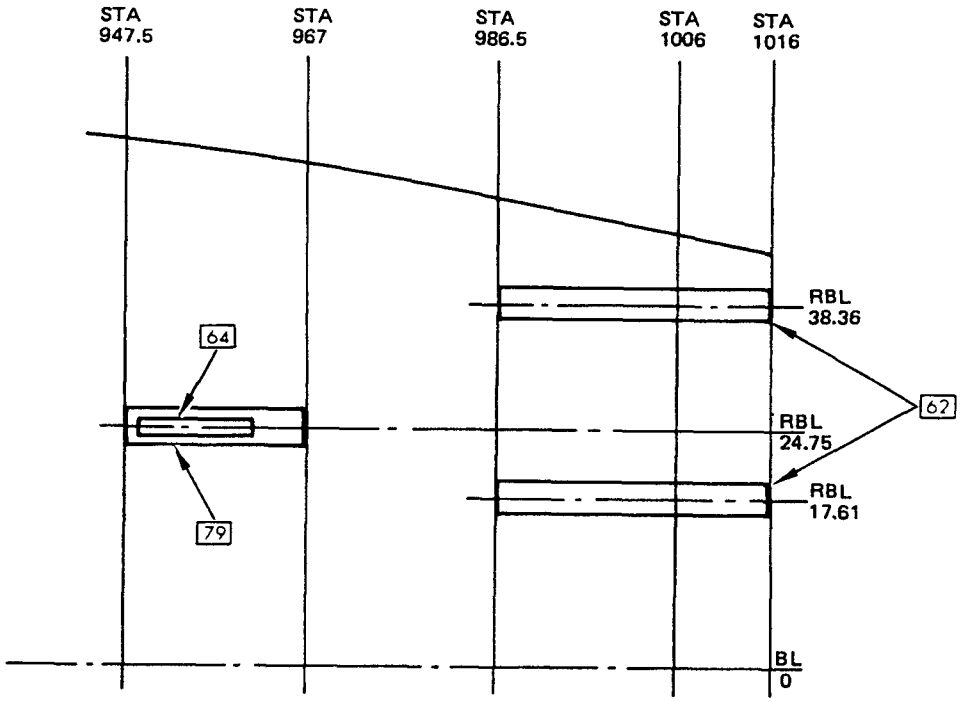

DETAIL XIV U

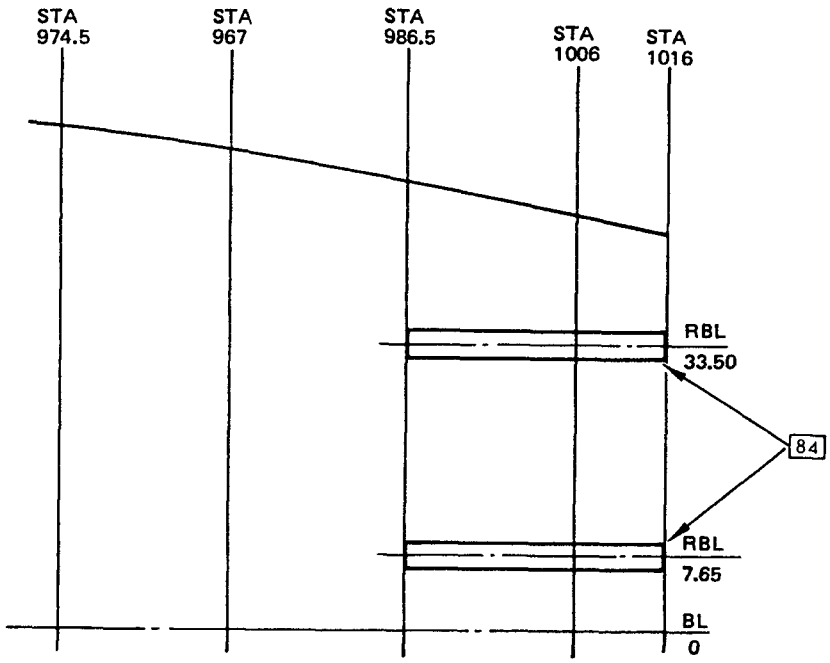

DETAIL XV V

Main Cabin Floor Beams and Seat Tracks - Material Identification
Figure 7 (Sheet 20)

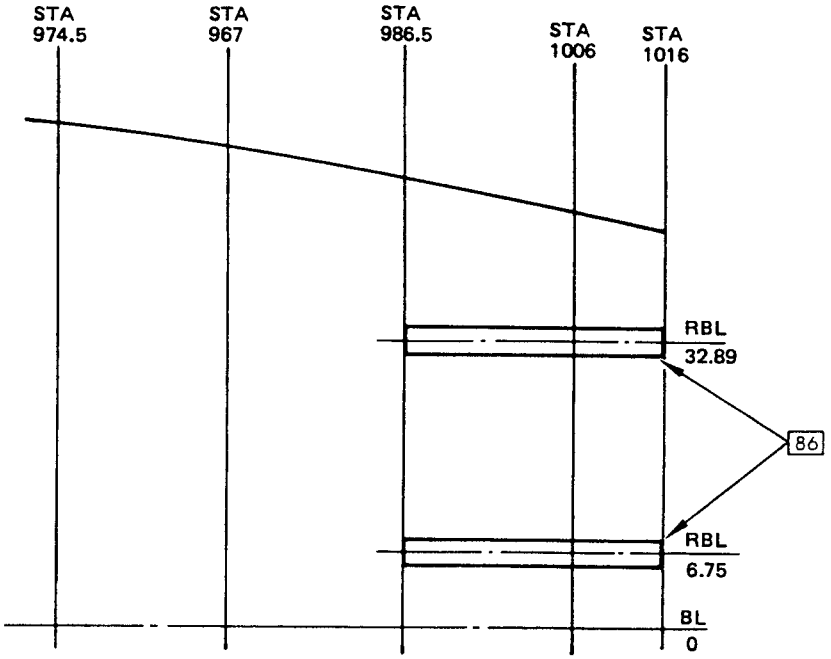

DETAIL XVI Y

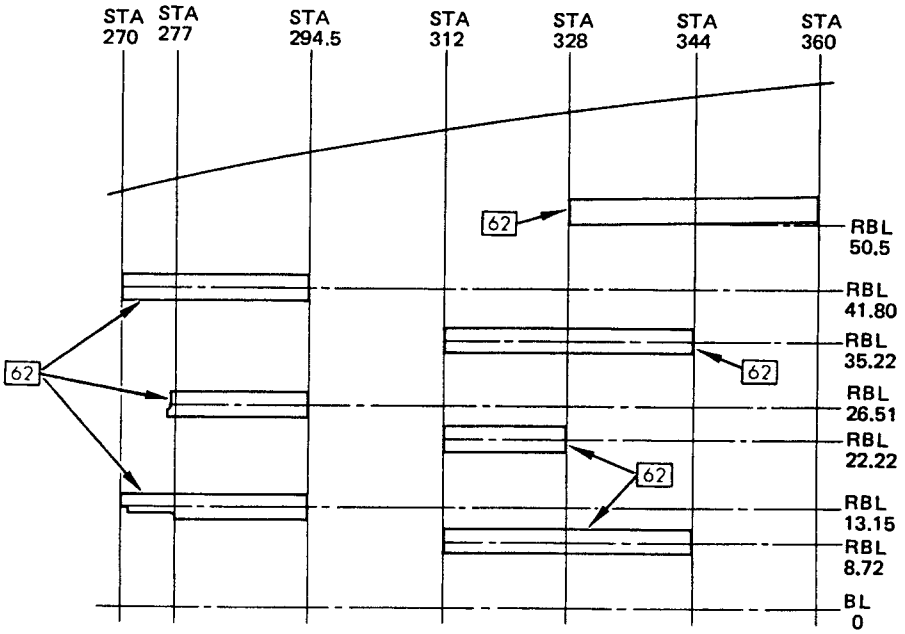

DETAIL XVII AA AB

Main Cabin Floor Beams and Seat Tracks - Material Identification
Figure 7 (Sheet 21)

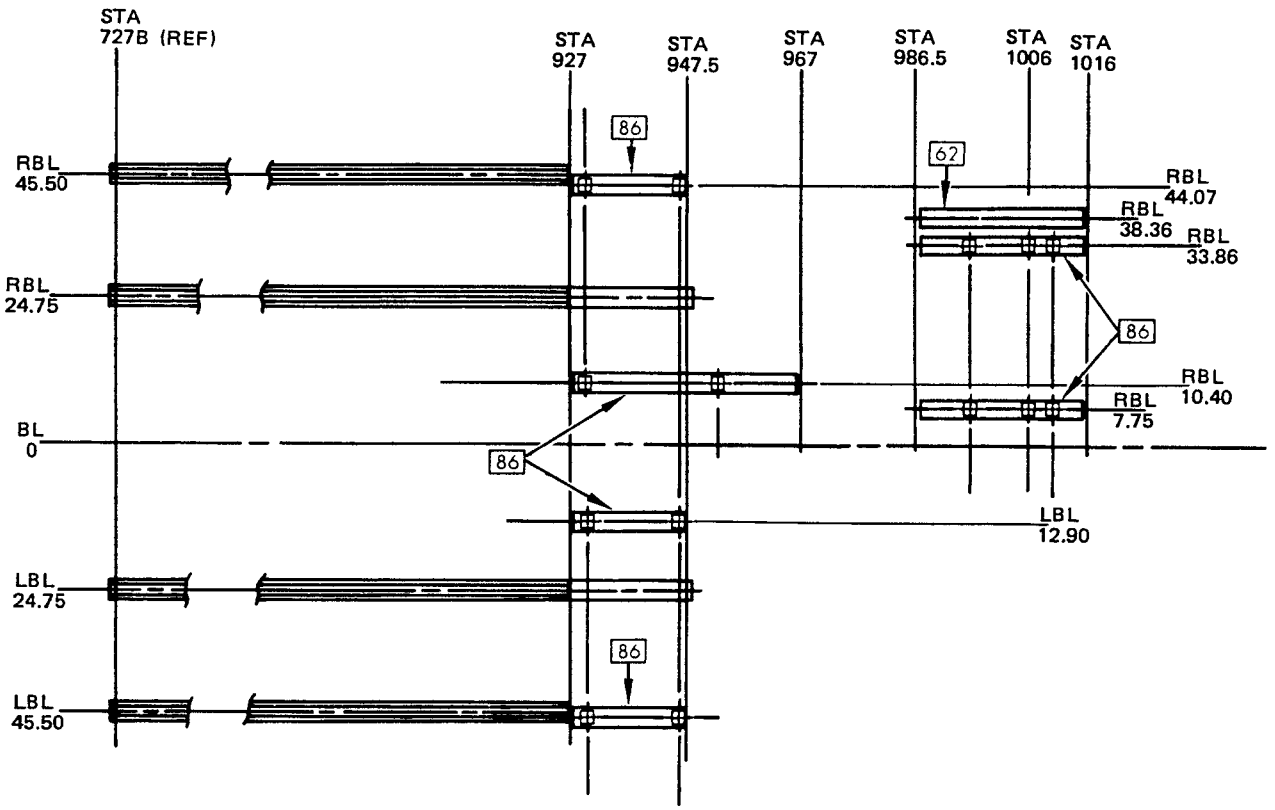

DETAIL XVIII AG

Main Cabin Floor Beams and Seat Tracks - Material Identification
Figure 7 (Sheet 22)

NOTES

[A] FOR CUM LINE NUMBERS:
6, 8, 12, 14, 16, 18, 19, 21, 22, 24, 25, 27, 28, 30, 31, 34, 36, 37, 42, 48 THRU 50, 55, 58, 59, 62, 63, 65, 69, 71, 74 THRU 76, 85, 86, 90, 95, 97, 99, 103, 106, 107, 114, THRU 117, 121 THRU 123, 129, 130, 133, 135, 137, 138, 146, 148, 150, 151, 171, 174, 175, 179, 183, 185 THRU 187, 191, 197, 198, 200 THRU 202, 206, 210, 211, 458

[B] FOR 737-200 AIRPLANES NOT LISTED IN [A]

[C] FOR CUM LINE NUMBERS:
277 AND ON

[D] FOR CUM LINE NUMBERS:
13 THRU 276

[E] FOR ALL CUM LINE NUMBERS NOT LISTED IN [A]

[F] FOR CUM LINE NUMBERS LISTED IN [A] EXCEPT 458

[G] FOR CUM LINE NUMBERS NOT LISTED IN [F]

[H] FOR CUM LINE NUMBERS:
1 THRU 5, 7, 9 THRU 11, 13, 15, 17, 20, 23, 26, 29, 32, 33, 35, 38 THRU 41, 43 THRU 47, 51 THRU 54, 56, 57, 60, 61, 64, 66 THRU 68, 70, 72, 73, 77 THRU 84, 87 THRU 89, 91 THRU 94, 96, 98, 100 THRU 102, 104, 105, 108 THRU 113, 118 THRU 120, 124 THRU 128, 131, 132, 134, 136, 139 THRU 145, 147, 149, 152 THRU 170, 172, 173, 176 THRU 178, 180 THRU 182, 184, 188 THRU 190, 193 THRU 196, 199, 203 THRU 205, 207 THRU 209, 212 THRU 276

ITEM	MATERIAL	REPAIR FIG. NO.
1	0.050 CLAD SHT 2024-T3	
2	0.040 CLAD SHT 2024-T3	
3	0.070 CLAD SHT 2024-T3	
4	BAC1496-364 7075-T6	
5	BAC1520-1397 7178-T6511	53-10-5 Fig. 4,5
6	BAC1520-843 7178-T6511	53-10-5 Fig. 4,5
7	BAC1509-100146 7075-T6511	53-10-5 Fig. 6
8	BAC1517-1167 7075-T6511	
9	BAC1496-377 7075-T6	
10	0.070 GILLINER 1266	

Cargo Floor Structure Identification
Figure 8 (Sheet 1)

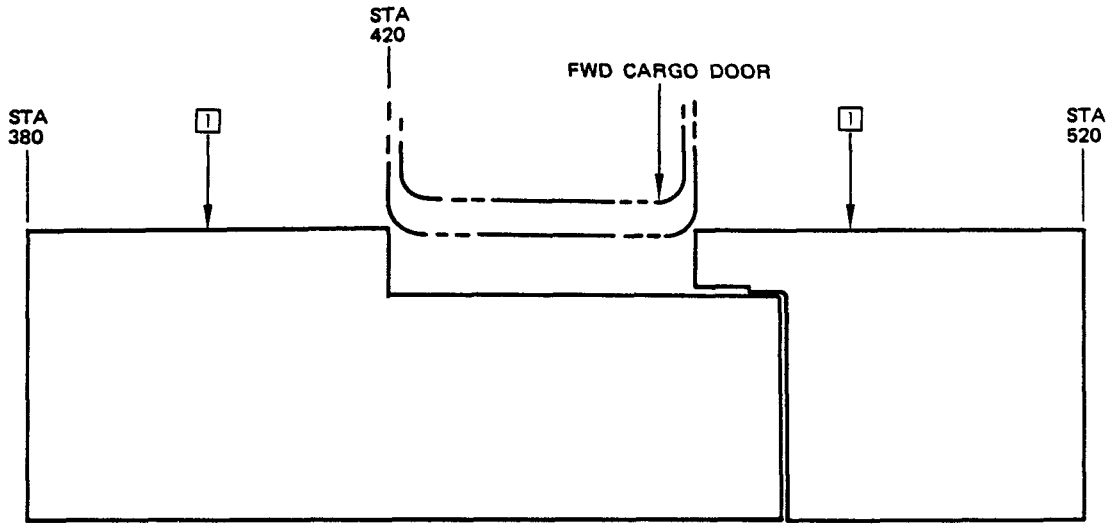

SECTION 43 PLAN VIEW
CARGO FLOOR PANELS
737–100

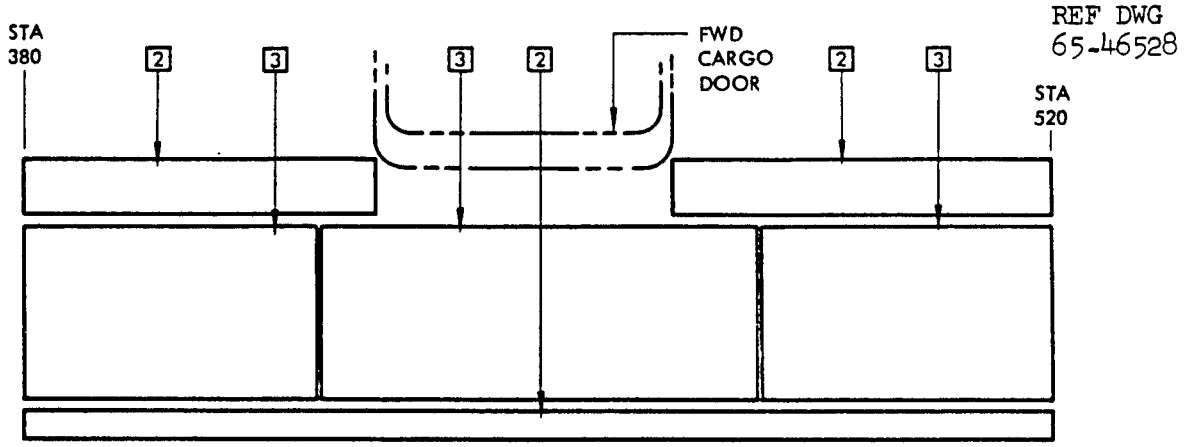

SECTION 43 PLAN VIEW
CARGO FLOOR PANELS
737–200 A

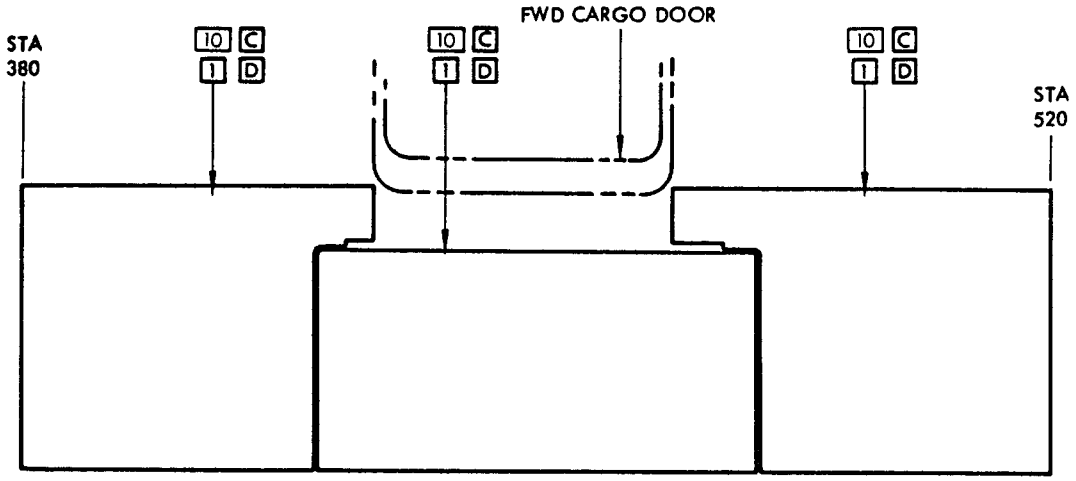

SECTION 43 PLAN VIEW
CARGO FLOOR PANELS
737–200 B

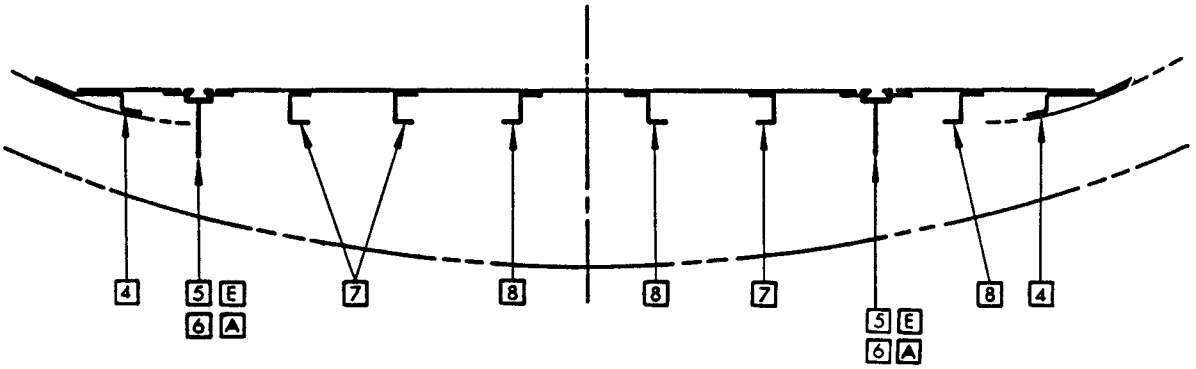

SECTION THROUGH CARGO FLOOR
(FWD CARGO COMPARTMENT)

REF DWG
65-46592

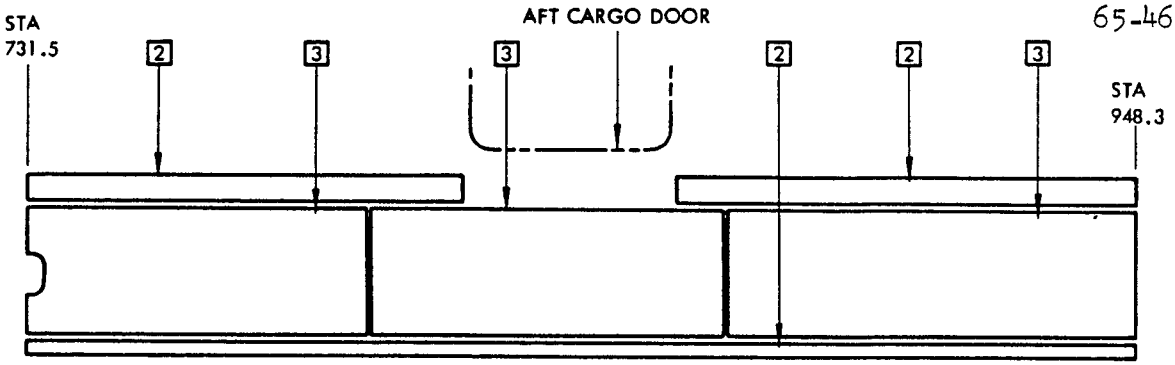

SECTION 46 PLAN VIEW
CARGO FLOOR PANELS F

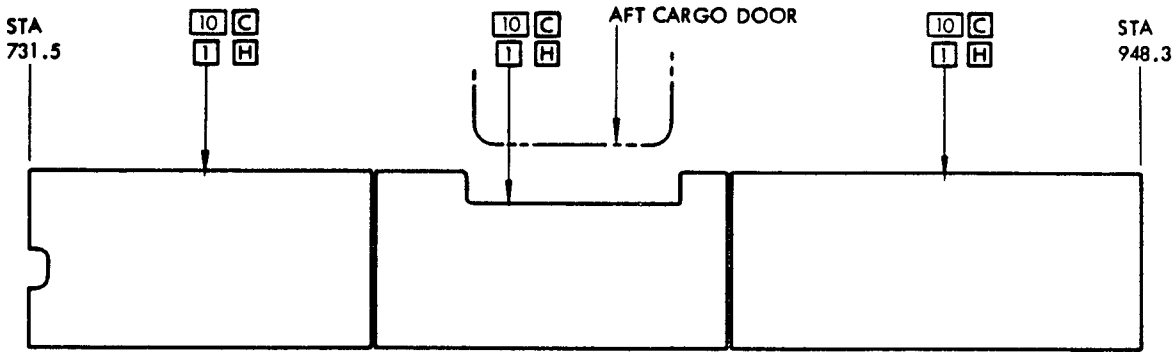

SECTION 46 PLAN VIEW
CARGO FLOOR PANELS G

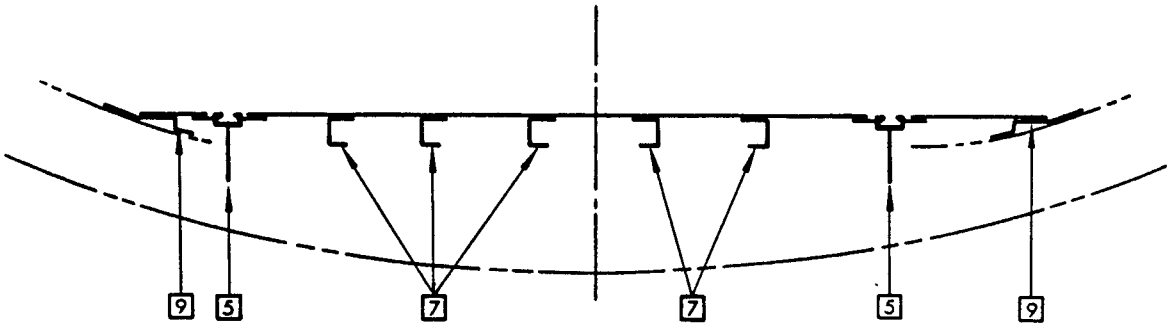

SECTION THROUGH CARGO FLOOR
(AFT CARGO COMPARTMENT)

ITEM	GAGE	SECTION NO.	STRINGER TYPE	REPAIR FIG. NO.
1	0.028	BAC1498-150 7075-T6 CLAD		
2	0.032	BAC1498-151 7075-T6 CLAD		
3	0.036	BAC1498-152 7075-T6 CLAD		
4	0.040	BAC1498-153 7075-T6 CLAD		
5	0.045	BAC1498-154 7075-T6 CLAD		
6	0.050	BAC1498-164 7075-T6 CLAD		
7	0.040	7075-T6 CLAD		
8	0.063	7075-T6 CLAD		
9	0.071	BAC1498-167 7075-T6 CLAD		
10	0.032	BAC1498-138 7075-T6 CLAD		
11	0.028	BAC1498-155 7075-T6 CLAD		
12	0.032	BAC1498-156 7075-T6 CLAD		
13	0.036	BAC1498-157 7075-T6 CLAD		

ITEM	GAGE	SECTION NO.	STRINGER TYPE	REPAIR FIG. NO.
14	0.040	BAC1498-158 7075-T6 CLAD		
15	0.045	BAC1498-159 7075-T6 CLAD		
16	0.050	BAC1498-160 7075-T6 CLAD		
17	0.056	BAC1498-161 7075-T6 CLAD		
18	0.063	BAC1498-162 7075-T6 CLAD		
19	0.071	BAC1498-163 7075-T6 CLAD		
20	0.036	BAC1498-139 7075-T6 CLAD		
21		BAC1506-854 7075-T6		
22	0.045	BAC1498-141 7075-T6 CLAD		
23		BAC1503-1430 2024-T3511		
24	0.071	BAC1493-601 7075-T6 CLAD		
25		BAC1505-100625 7075-T6 CLAD		
26		SPECIAL MISC.		

Fuselage Stringer Identification
Figure 9 (Sheet 1)

ITEM	GAGE	SECTION NO.	STRINGER TYPE	REPAIR FIG. NO.
27	0.032	BAC1498-108 7075-T6 CLAD		
28		KEEL BEAM		
29		BAC1517-1471 7075-T6511		
30		BAC1517-1485 7075-T6511		
31	0.040	BAC1498-107 7075-T6 CLAD		
32	0.036	7075-T6 CLAD		
33	0.050	7075-T6 CLAD		
34	0.063	BAC1498-162 7075-T6 CLAD		
35		BAC1506-1586 2024-T3511		
36	0.056	BAC1498-165 7075-T6 CLAD		
37	0.040	BAC1498-140		
38	0.050	BAC1498-142		
39	TAPERED	CLAD 7075-T6		
40	0.050	(BUILT-UP STRINGER) WEB, CLAD 2024-T3		
		BAC1506-2035 2024-T3511		
		BAC1505-100546 2024-T3511		

ITEM	GAGE	SECTION NO.	STRINGER TYPE	REPAIR FIG. NO.
41	0.050	(BUILT-UP STRINGER) WEB, CLAD 2024-T3		
		BAC1503-100300 2024-T3511		
		BAC1506-2036 2024-T3511		
42	TAPERED	CLAD 7075-T6		
43	0.063	BAC1498-137 CLAD 2024-T42		
44		REINFORCEMENT BAC1496-387 2024-T42 CLAD		
45		FILLER BAC1511-845 2024-T3511		
46		FILLER BAC1511-1008 2024-T3511		
47	0.045	TAPERED GAGE STRINGER CLAD 7075-T6		
48	0.020	CLAD 2024-T3		
49	TAPERED 0.063 TO 0.032	CLAD 7075-T6		

Fuselage Stringer Identification
Figure 9 (Sheet 2)

ITEM	DESCRIPTION	GAGE	MATERIAL	EFFECTIVITY
49	UPPER CHORD	0.040 0.063	CLAD 7075-T6 CLAD 2024-T42	F G
50	LOWER CHORD	0.063 0.071	CLAD 7075-T6 CLAD 2024-T42	F G
51	OUTBD STRAP	0.063 0.071	CLAD 7075-T6 CLAD 2024-T42	F G
52	UPPER CHORD	0.040 0.063	CLAD 7075-T6 CLAD 2024-T42	F G
53	LOWER CHORD	0.063 0.063	CLAD 7075-T6 CLAD 2024-T42	F G
54	OUTBD STRAP	0.063 0.071	CLAD 7075-T6 BARE 2024-T3	F G

Fuselage Stringer Identification
Figure 9 (Sheet 2A)

PLAN VIEW OF OUTSIDE SURFACE

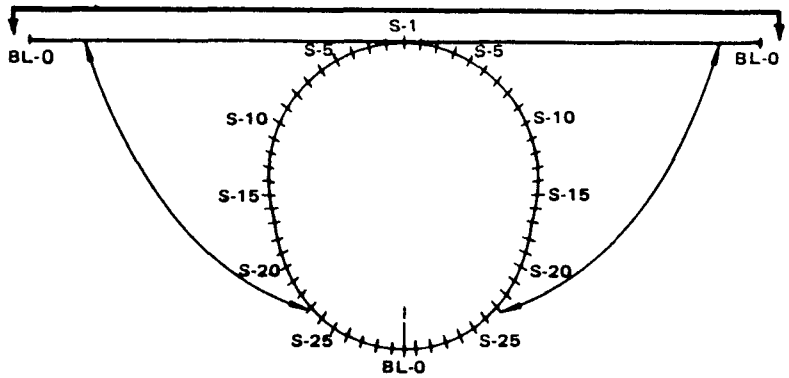

NOTES

[A] FOR 737-200 PASSENGER AIRPLANES WITH 110,000 LB CERTIFIED GROSS WEIGHT FROM AIRPLANE CUM LINE NUMBERS:
246 AND ON

[B] FOR ALL AIRPLANES EXCEPT THOSE COVERED BY [A]

[C] FOR AIRPLANES WITH SB 53-1040 INCORPORATED

[D] FOR CUM LINE NUMBERS:
561, 562
SOUND DAMPING CAPS LOCATED BETWEEN FRAMES STA 727A TO 907

[E] FOR CUM LINE NUMBERS:
561, 562
SOUND DAMPING CAPS LOCATED BETWEEN FRAMES STA 727A TO 1006

[F] FOR AIRPLANES WITHOUT 737 SB 53-1134 INCORPORATED

[G] FOR AIRPLANES WITH 737 SB 53-1134 INCORPORATED

Fuselage Stringer Identification
Figure 9 (Sheet 3)

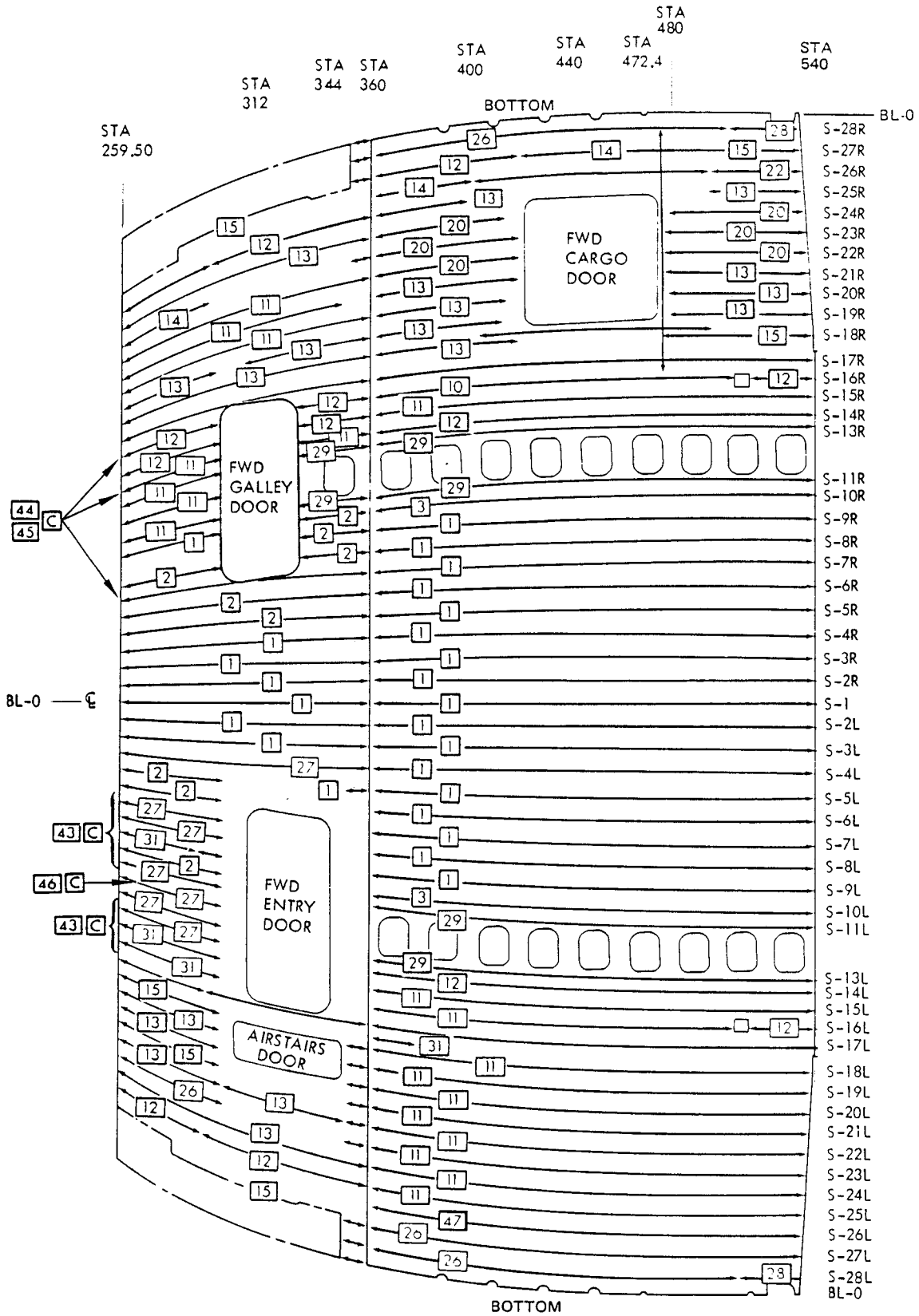

Fuselage Stringer Identification
Figure 9 (Sheet 4)

EFFECTIVITY
737-200 AIRPLANES

REF DWG 65-73744

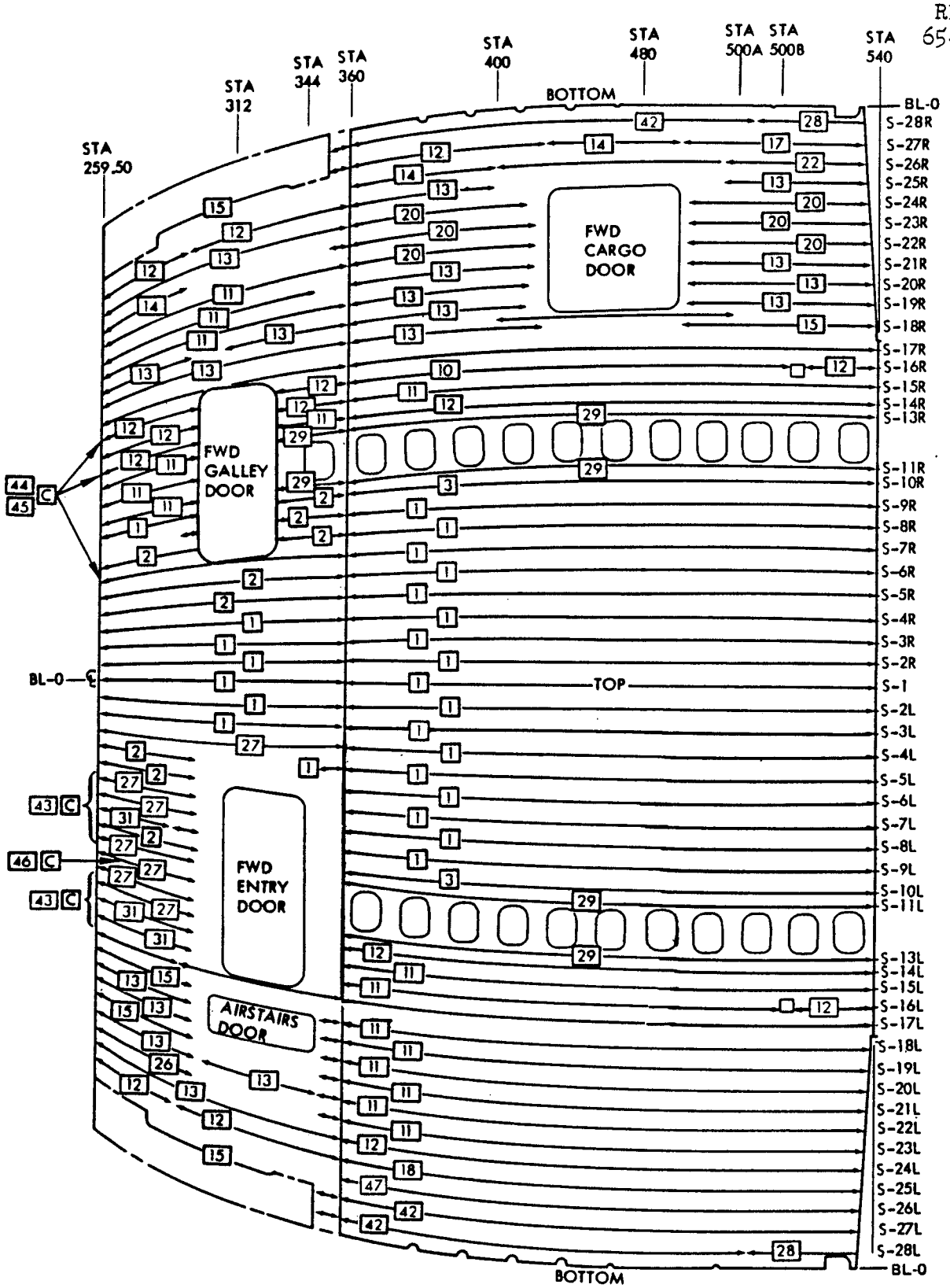

Fuselage Stringer Identification
Figure 9 (Sheet 5)

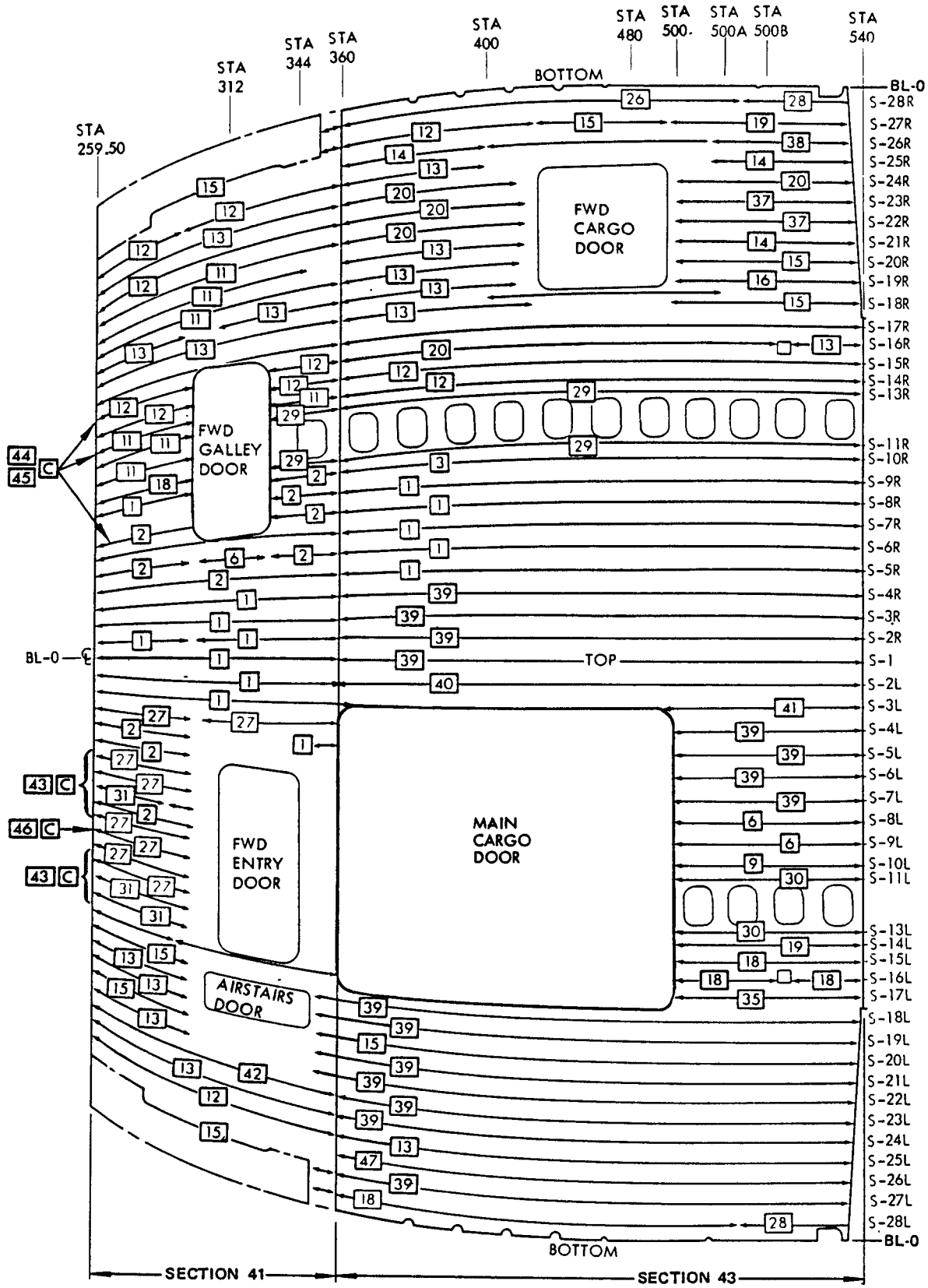

Fuselage Stringer Identification
Figure 9 (Sheet 6)

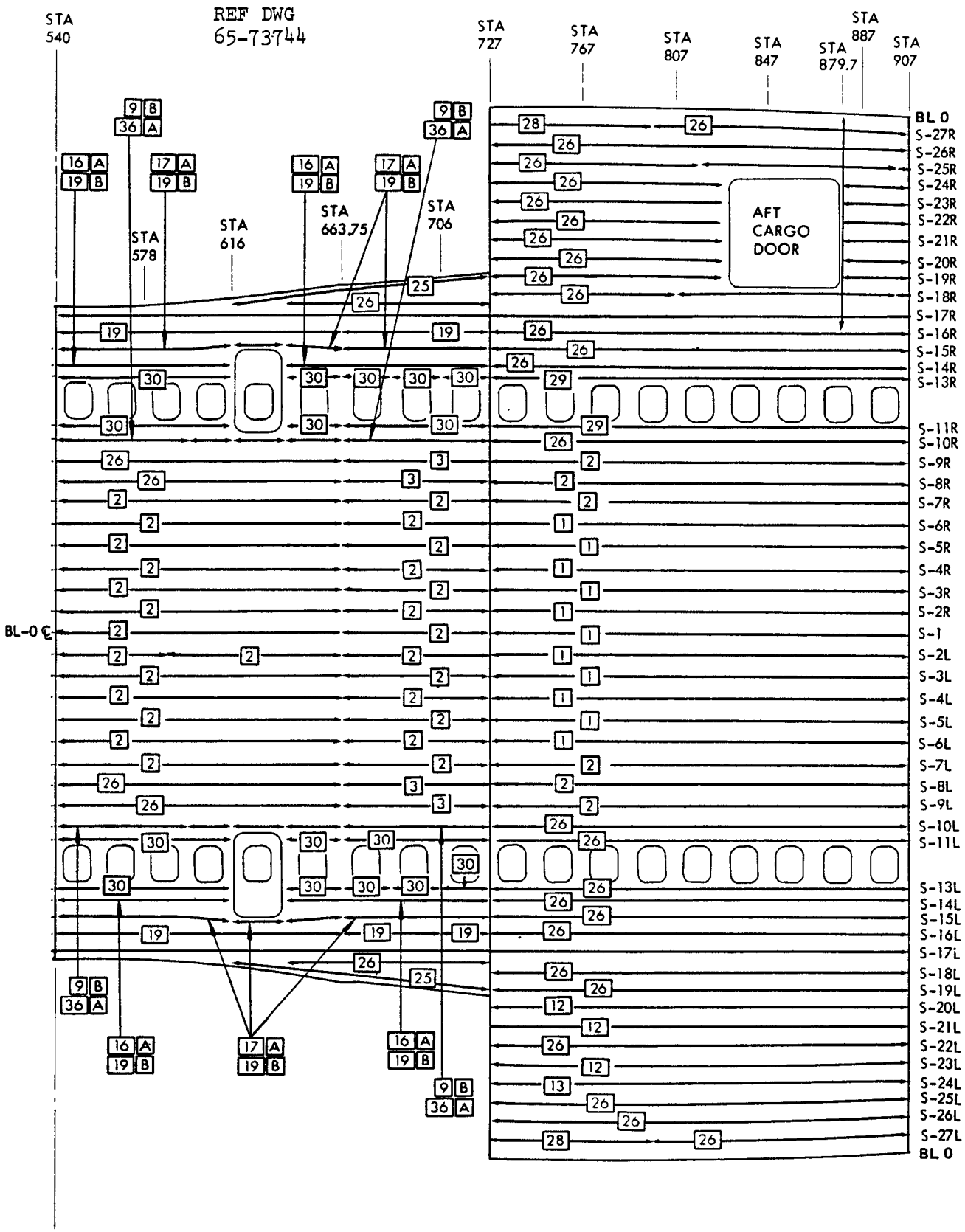

Fuselage Stringer Identification
Figure 9 (Sheet 7)

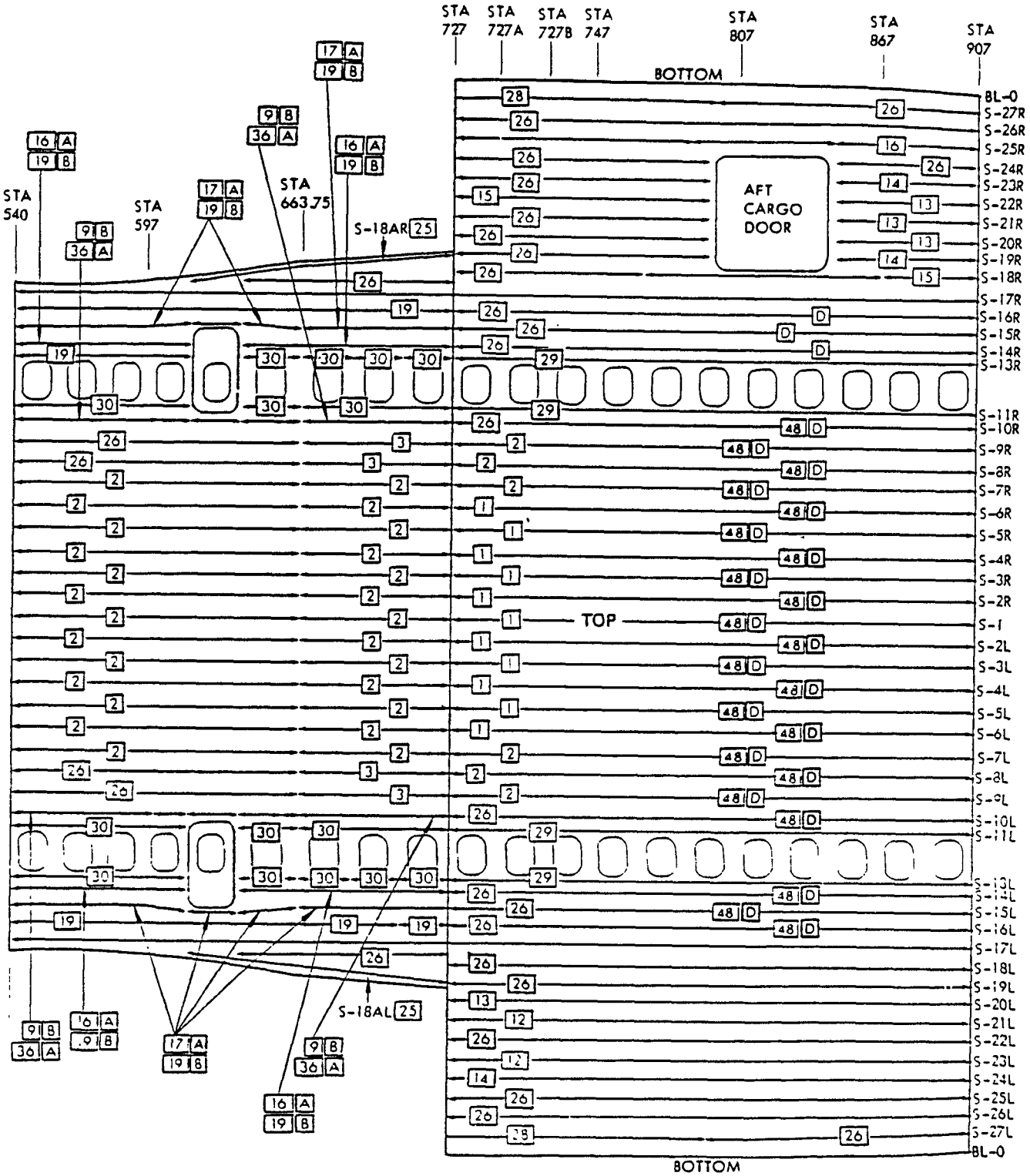

Fuselage Stringer Identification
Figure 9 (Sheet 7A)

REF DWG
65-73744

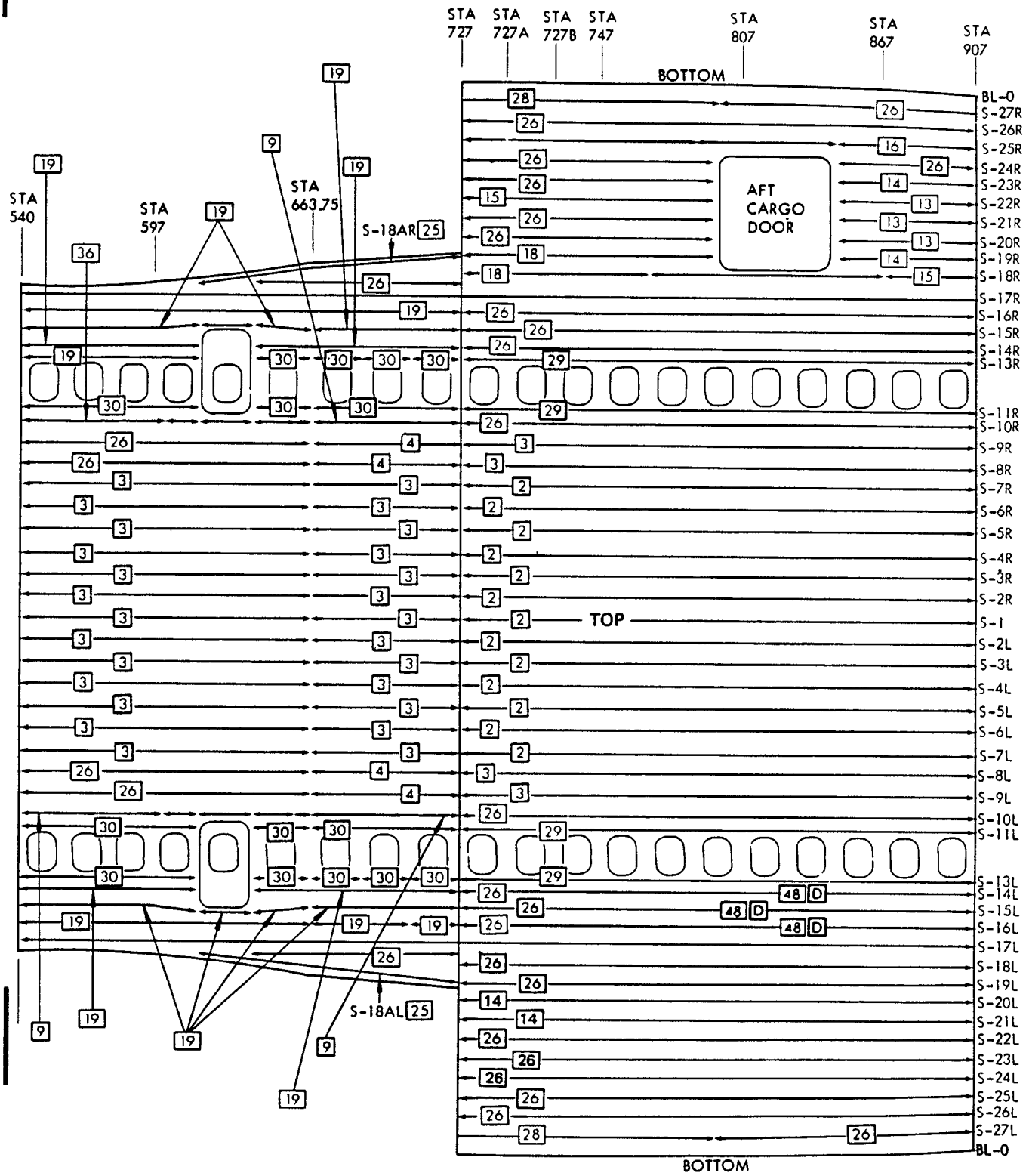

Fuselage Stringer Identification
Figure 9 (Sheet 8)

EFFECTIVITY
737-100 AIRPLANES

REF DWG
65-73744

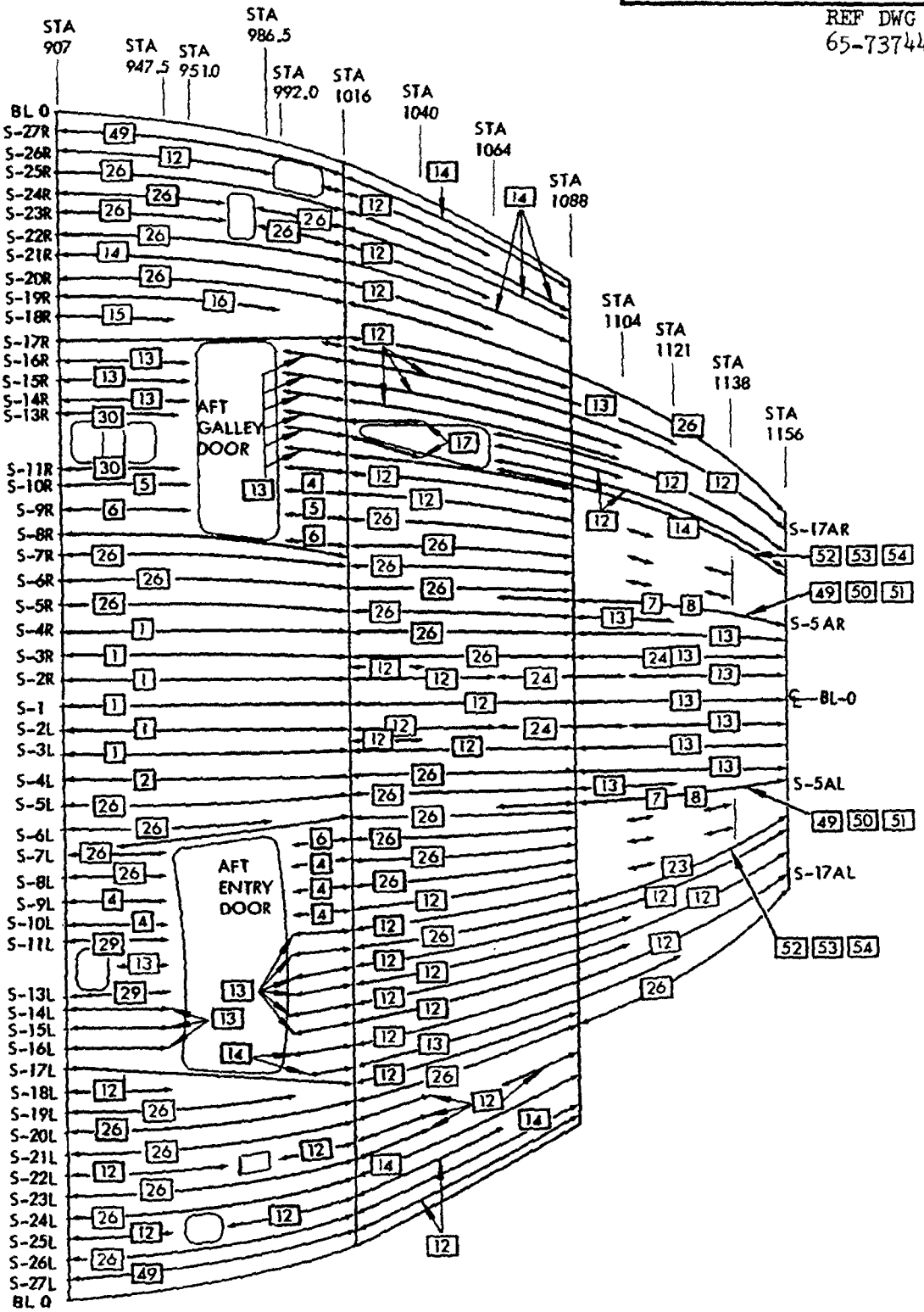

Fuselage Stringer Identification
Figure 9 (Sheet 9)

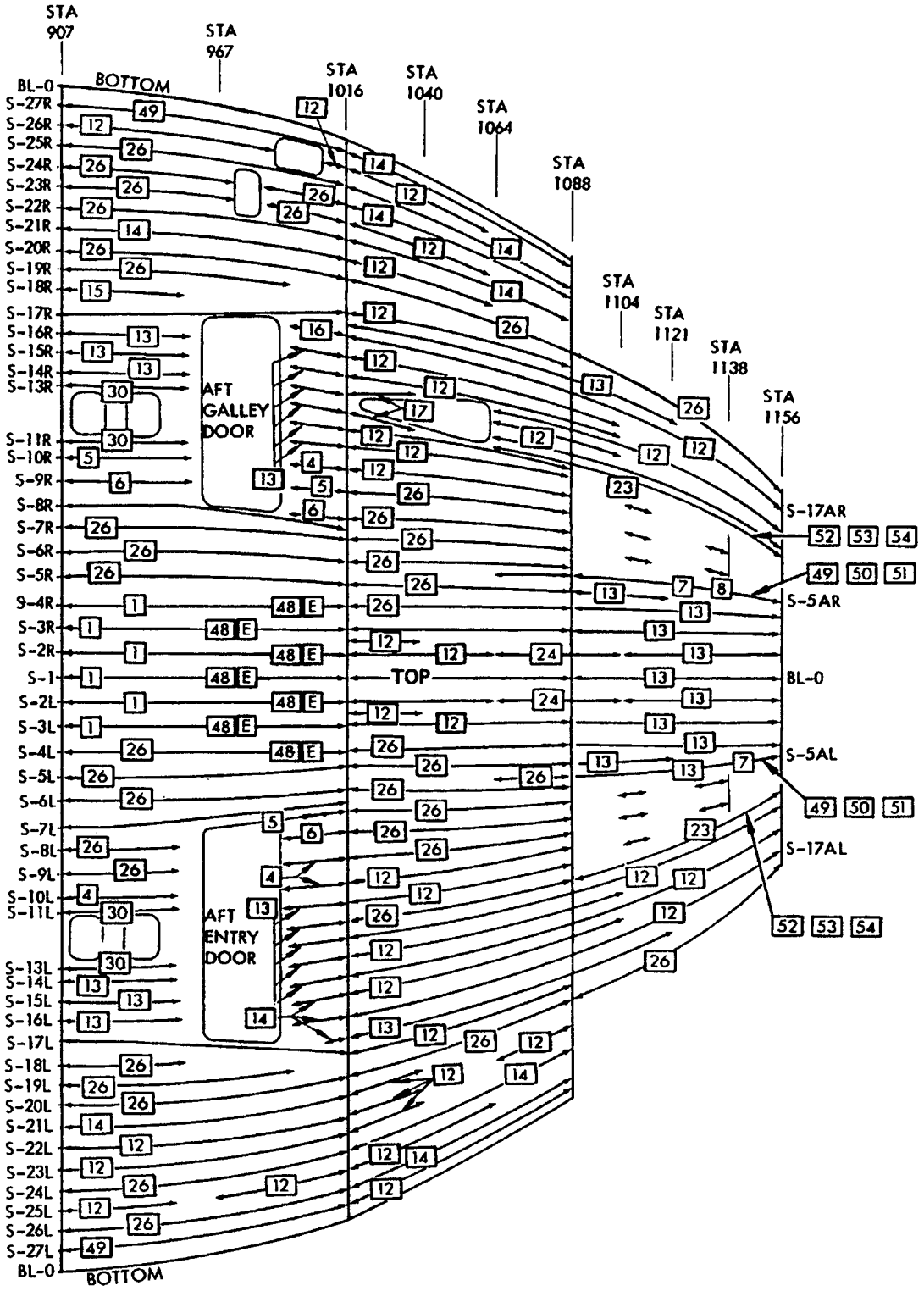

Fuselage Stringer Identification
Figure 9 (Sheet 10)

REF DWG
65-80857

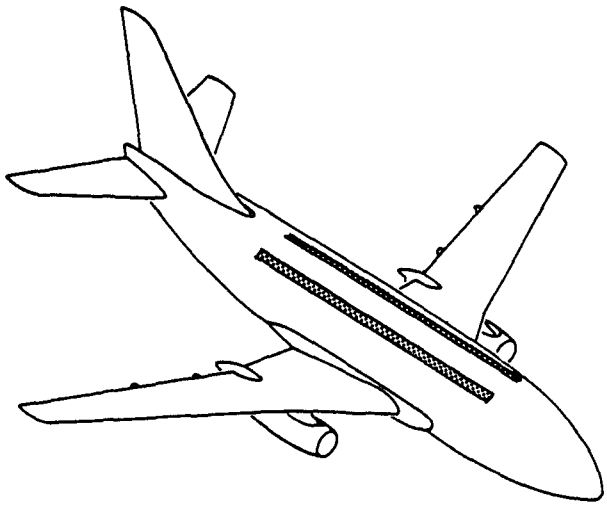

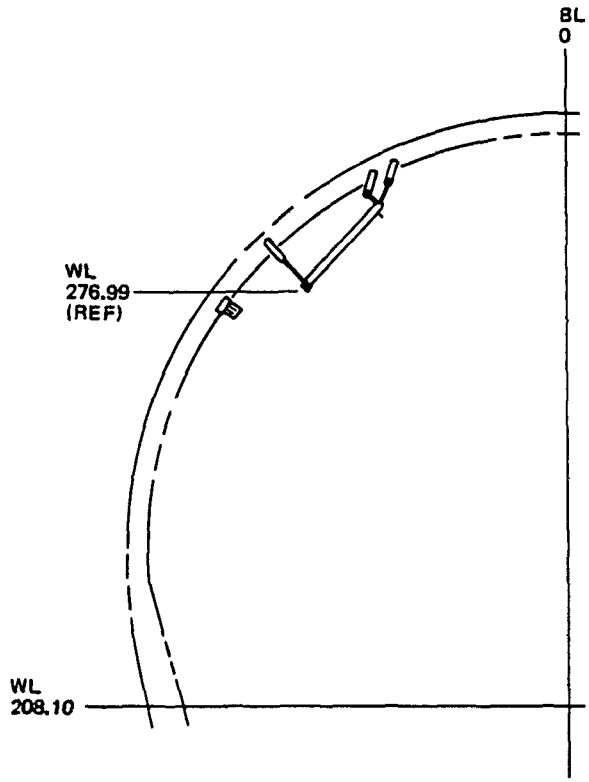

LOCATION OF STRUCTURE

NOTE

- FOR ALL AIRPLANES WITH "SUPER JET" INTERIOR.

Overhead Interior Support Structure, Hatracks -
Material Identification
Figure 10 (Sheet 1)

ITEM	DESCRIPTION	GAGE	MATERIAL	REPAIR FIG. NO.
1	LOWER RAIL		BAC1517-1928 7075-T6511 EXTR	
2	UPPER RAIL		AND10134-1205 7075-T6511 EXTR	
3	TUBE		BAC1501-2842 7075-T6	
4	HINGE BRACKET	0.063	7075-T6 CLAD	
5	ANGLE		BAC1514-2288 7075-T6511 EXTR	
6	BRACKET		AND10134-1403 7075-T6511 EXTR	
7	STRUT ASSEMBLY		3/8 OD TUBE X.090 WALL 2024-T3	
8	BRACE		BAC1493-426 7075-T6 CLAD	
9	BRACKET	0.063	7075-T6 CLAD	
10	CHANNEL		AND10137-1102 7075-T6511 EXTR	
11	INTERCOSTAL	0.032	2024-T42 CLAD	
12	CLEVIS		BAC1519-141 7075-T73511	
13	BRACKET	0.090	7075-T6 CLAD	
14	BRACKET	0.071	7075-T6 CLAD	
15	TEE		BAC1505-100152 7075-T6511 EXTR	
16	INTERCOSTAL	0.050	2024-T42 CLAD	
17	DOUBLER	0.071	7075-T6 CLAD	

Overhead Interior Support Structure, Hatracks - Material Identification
Figure 10 (Sheet 2)

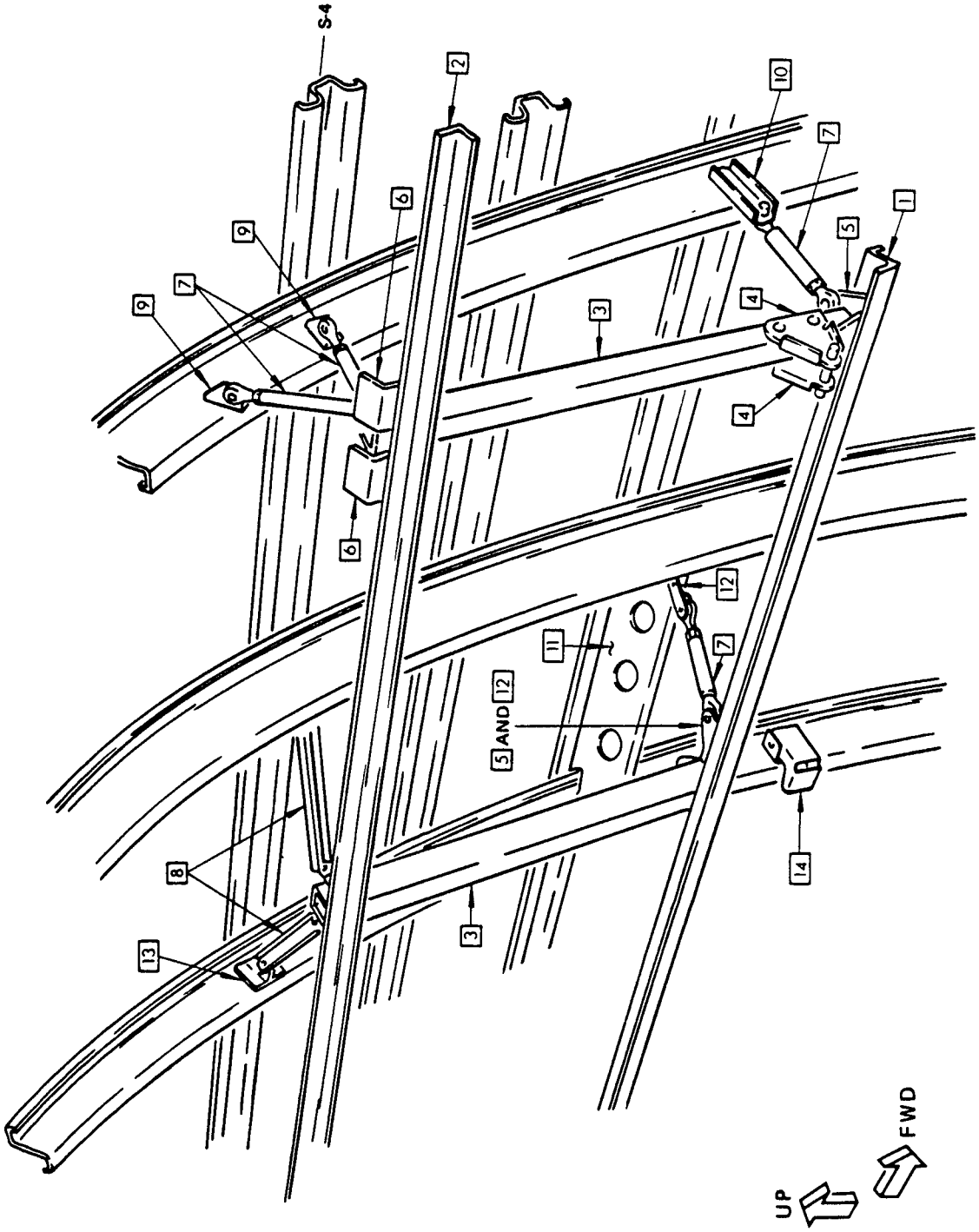

TYPICAL INSTALLATION - 40-INCH BIN

Overhead Interior Support Structure, Hatracks - Material Identification
Figure 10 (Sheet 3)

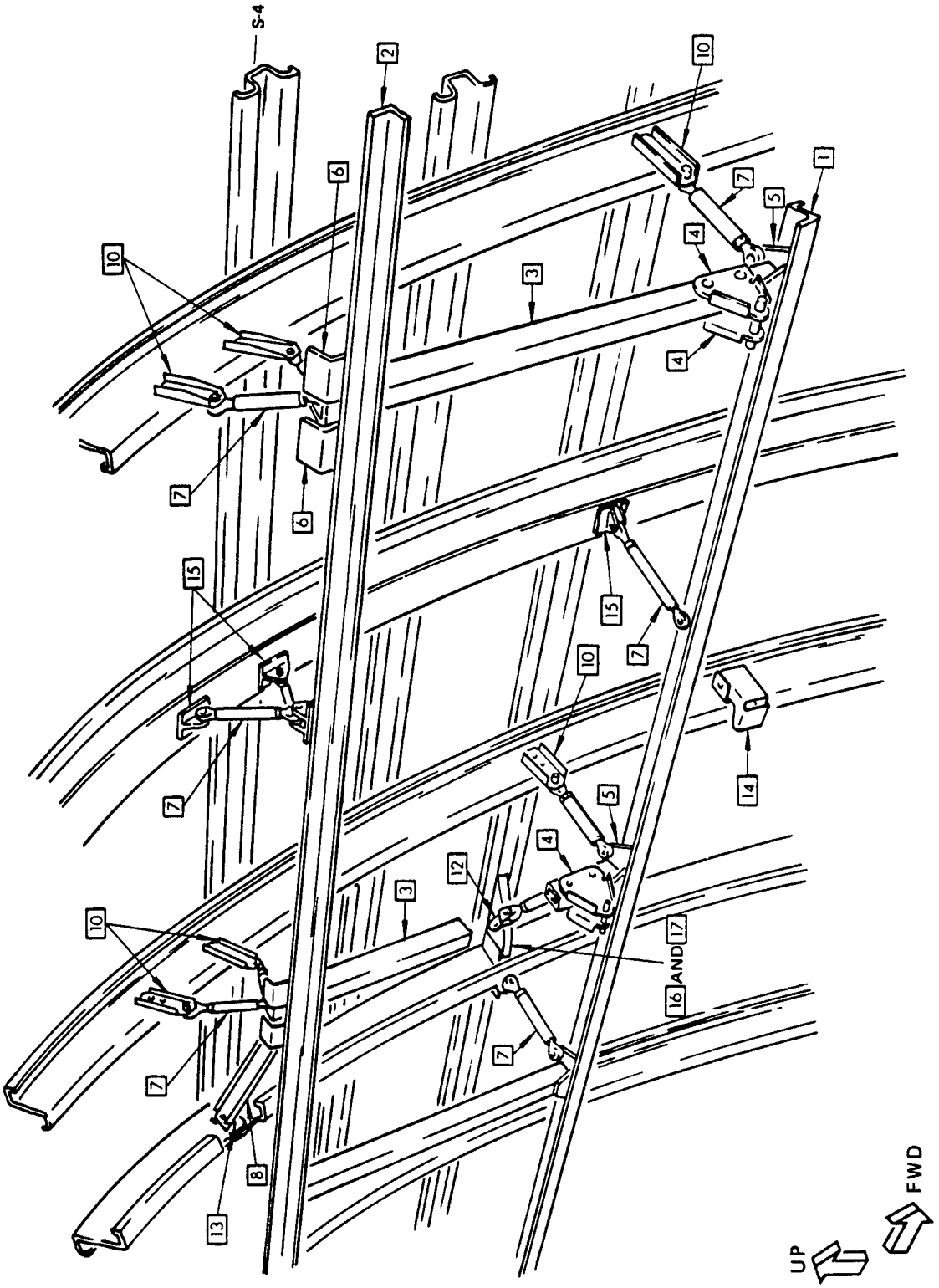

TYPICAL INSTALLATION – 80-INCH BIN

Overhead Interior Support Structure, Hatracks - Material Identification
Figure 10 (Sheet 4)

APPLICABILITY
AIRPLANE CUM LINE NOS. 868, 947, 983 (PL601 THRU PL610)

BOEING 737

STRUCTURAL REPAIR

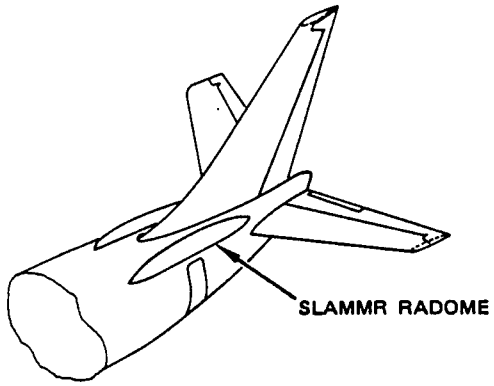

ITEM	NAME	GAGE	MATERIAL	REPAIR FIG. NO.
1	SHEAR TIE		BAC1505–100308 2024–T42	
2	RADIUS FILLER		BAC1512–323 2024–T3511	
3	RADIUS FILLER		BAC1512–3363 2024–T3511	
4	RADIUS FILLER		BAC1512–426 2024–T3511	
5	RADIUS FILLER		BAC1512–3380 2024–T3511	
6	RADIUS FILLER		BAC1511–448 2024–T3511	
7	INTERCOSTAL	0.050	CLAD 7075–T6	
8	FRAME	0.040	BAC1517–1470 CLAD 7075–T6	
9	SHEAR TIE	0.056	CLAD 7075–T6	
10	SHEAR TIE	0.045	CLAD 7075–T6	
11	FILLER	0.100	7075–T6	
12	FITTING		BAC1508–150 2024–T3511	
13	DOUBLER	0.050	CLAD 7075–T6	
14	ZEE	0.063	CLAD 7075–T6	
15	DOUBLER	0.040	CLAD 2024–T3	
16	INTERCOSTAL	0.063	CLAD 2024–T4	
17	CLIP		BAC1506–226 2024–T3511	
18	CLIP, ANTEN. MT		BAC1514–1472 2024–T3511	
19	FRAME SPLICE	0.045	CLAD 7075–T6	

SLAMMR Fairing Support Reinforcement
Figure 11 (Sheet 1)

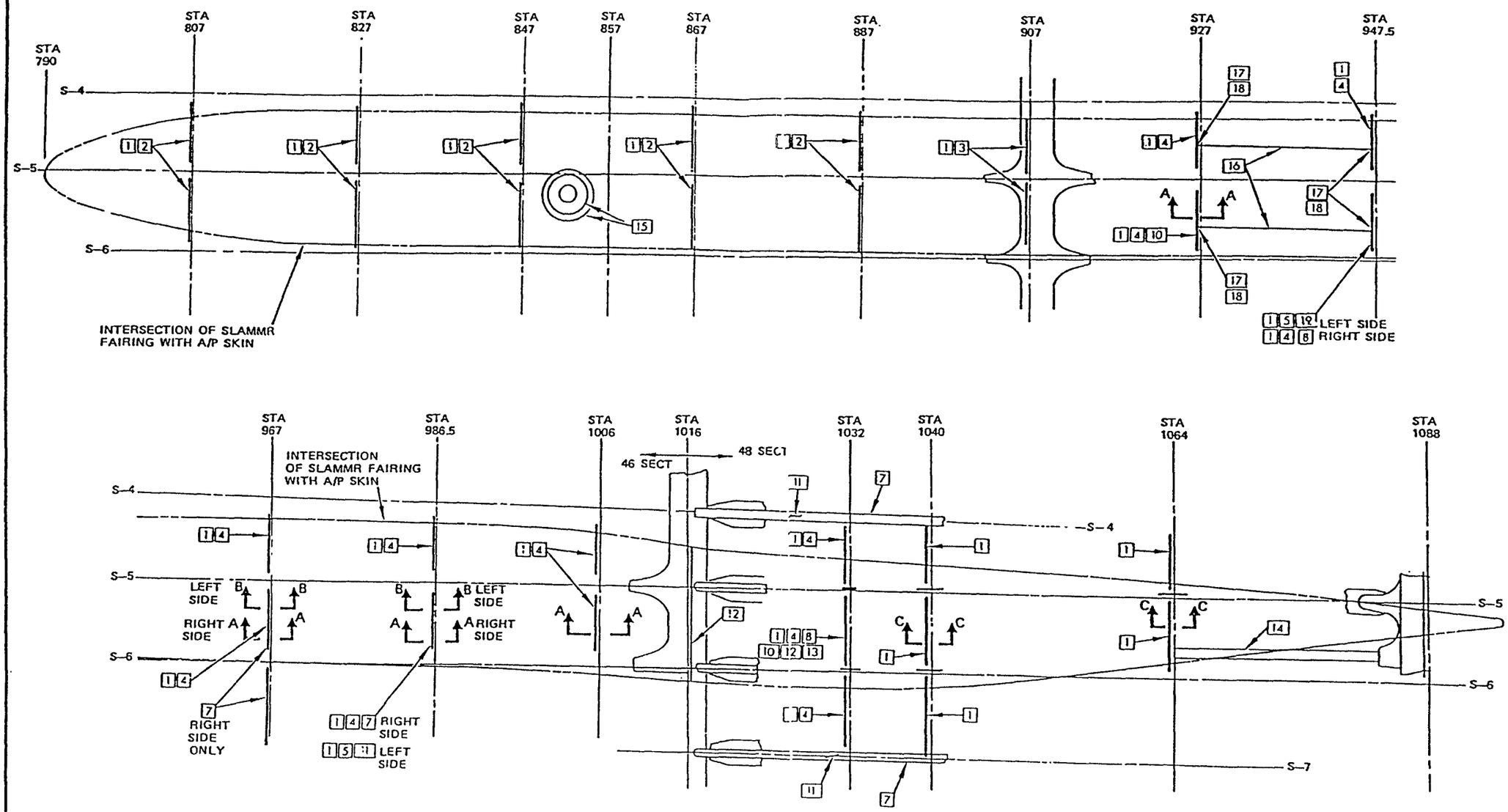

LEFT SIDE VIEW
(RIGHT SIDE OPPOSITE EXCEPT AS NOTED)

SLAMMR Fairing Support Reinforcement
Figure 11 (Sheet 2)

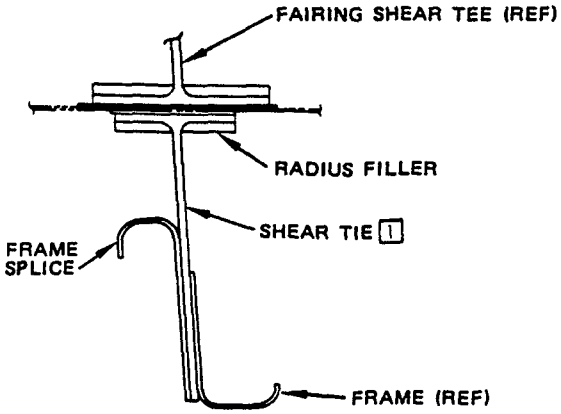

SECTION A–A

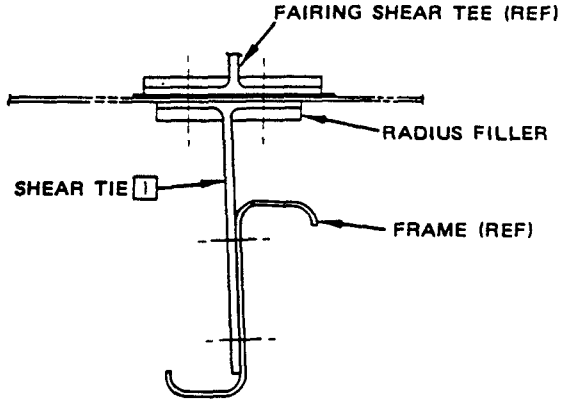

SECTION B–B

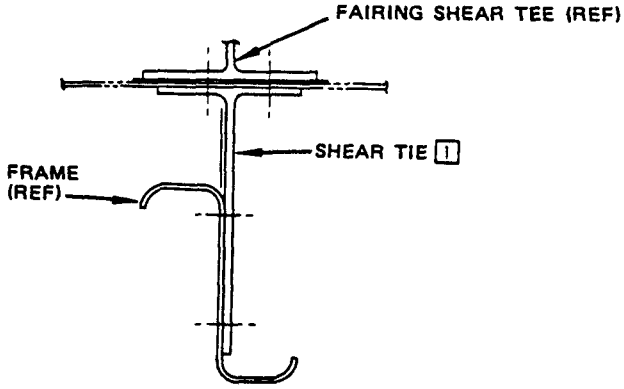

SECTION C–C

SLAMMR Fairing Support Reinforcement
Figure 11 (Sheet 3)

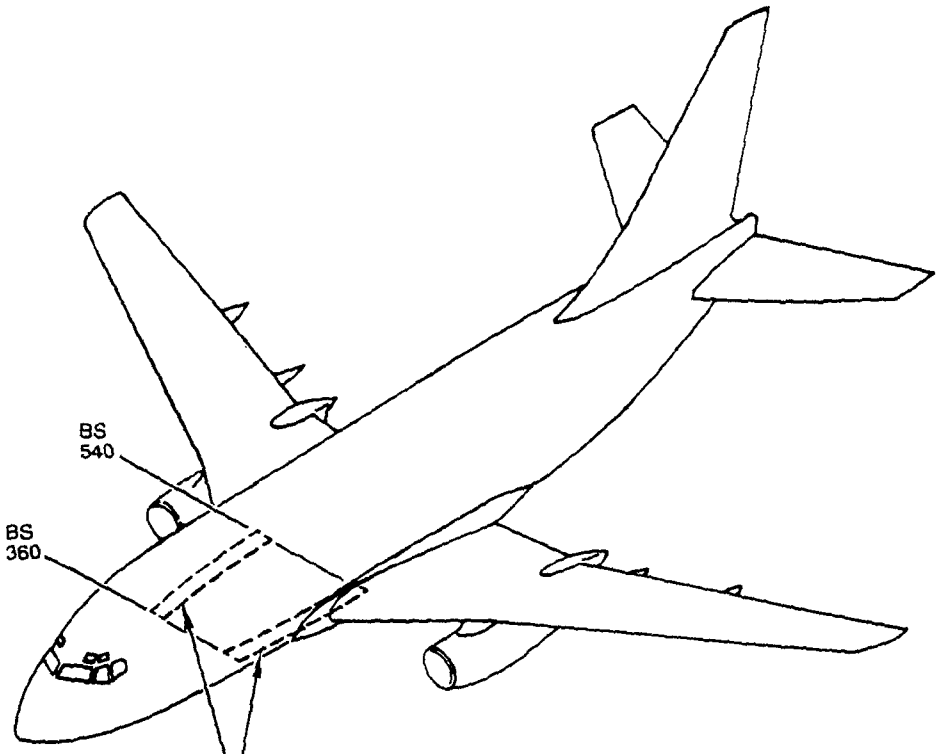

SEE DETAIL I FOR 737-100 PASSENGER AIRPLANES
DETAIL II FOR 737-200 PASSENGER AIRPLANES
DETAIL III FOR 737-200 CARGO AIRPLANES

NOTES

[A] FOR CUM LINE NUMBERS:
1 THRU 217

[B] FOR AIRPLANES NOT LISTED IN [A]

[C] FOR CUM LINE NUMBERS:
6 THRU 266, 268, 269, 271 THRU 273
(ALSO BOEING REF: P3514)

[D] FOR AIRPLANES NOT LISTED IN [C]

Section 43 Crease Beam Identification
Figure 12 (Sheet 1)

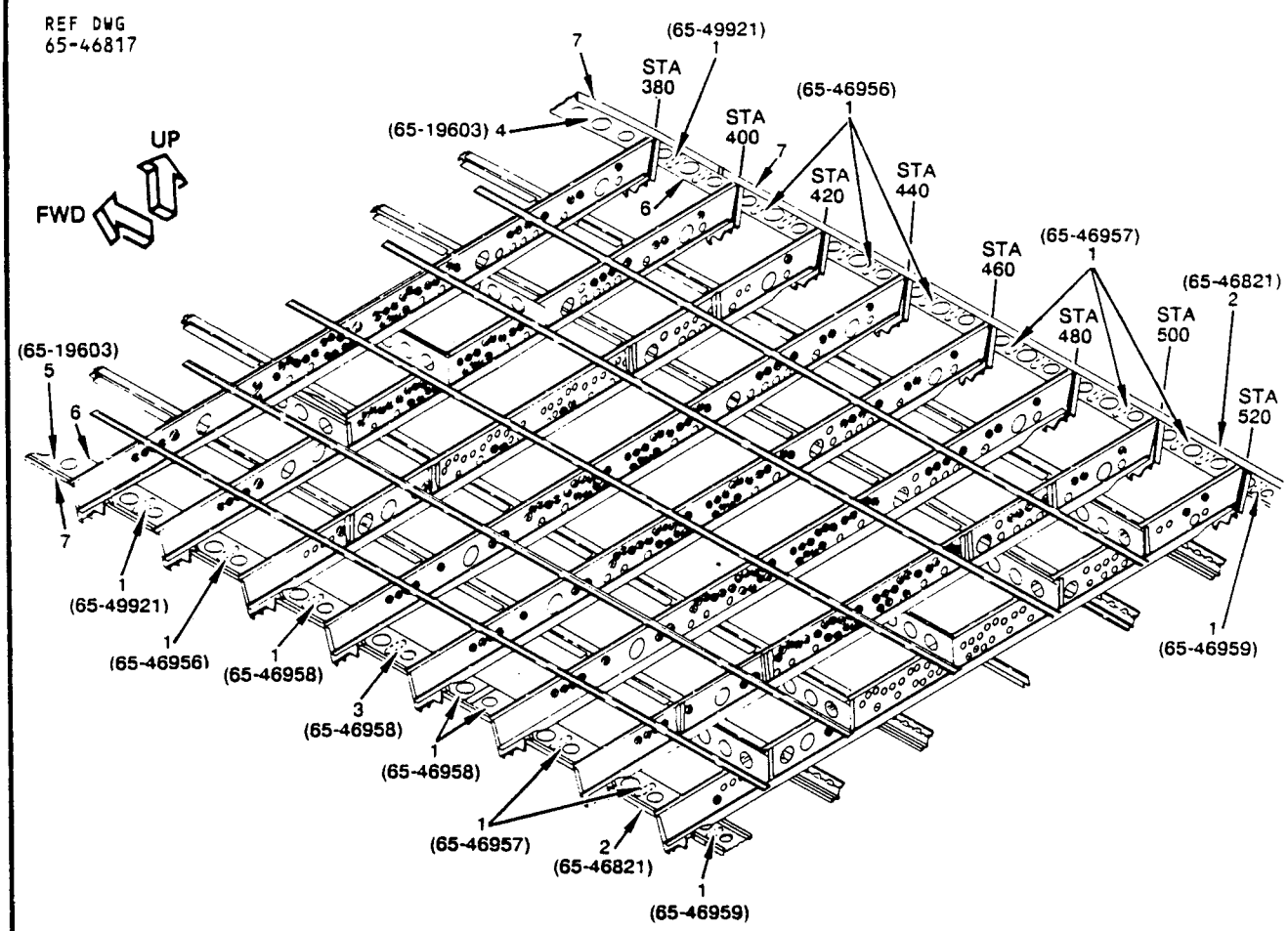

DETAIL I

ITEM	DESCRIPTION	GAGE	MATERIAL	EFFECTIVITY
1	SHEAR WEB	0.036	CLAD 7075-T6	
2	OUTER CHORD		BAC1506-1586 2024-T3511	
3	SHEAR WEB	0.036 0.040	CLAD 7075-T6 CLAD 7075-T6	A B
4	CREASE BEAM ASSY SHEAR WEB CHORD - TEE	 0.032	 CLAD 7075-T6 BAC1506-1601 7075-T6	
5	CREASE BEAM ASSY SHEAR WEB CHORD - TEE	 0.032	 CLAD 7075-T6 BAC1506-1132 7075-T6	
6	INBOARD CHORD		BAC1515-531 7075-T6511	
7	OUTBOARD CHORD		BAC1506-1133 7075-T6511	

LIST OF MATERIALS FOR DETAIL I

333342

Section 43 Crease Beam Identification
Figure 12 (Sheet 2)

EFFECTIVITY
737-200 PASSENGER AIRPLANES

REF DWG 65-46817

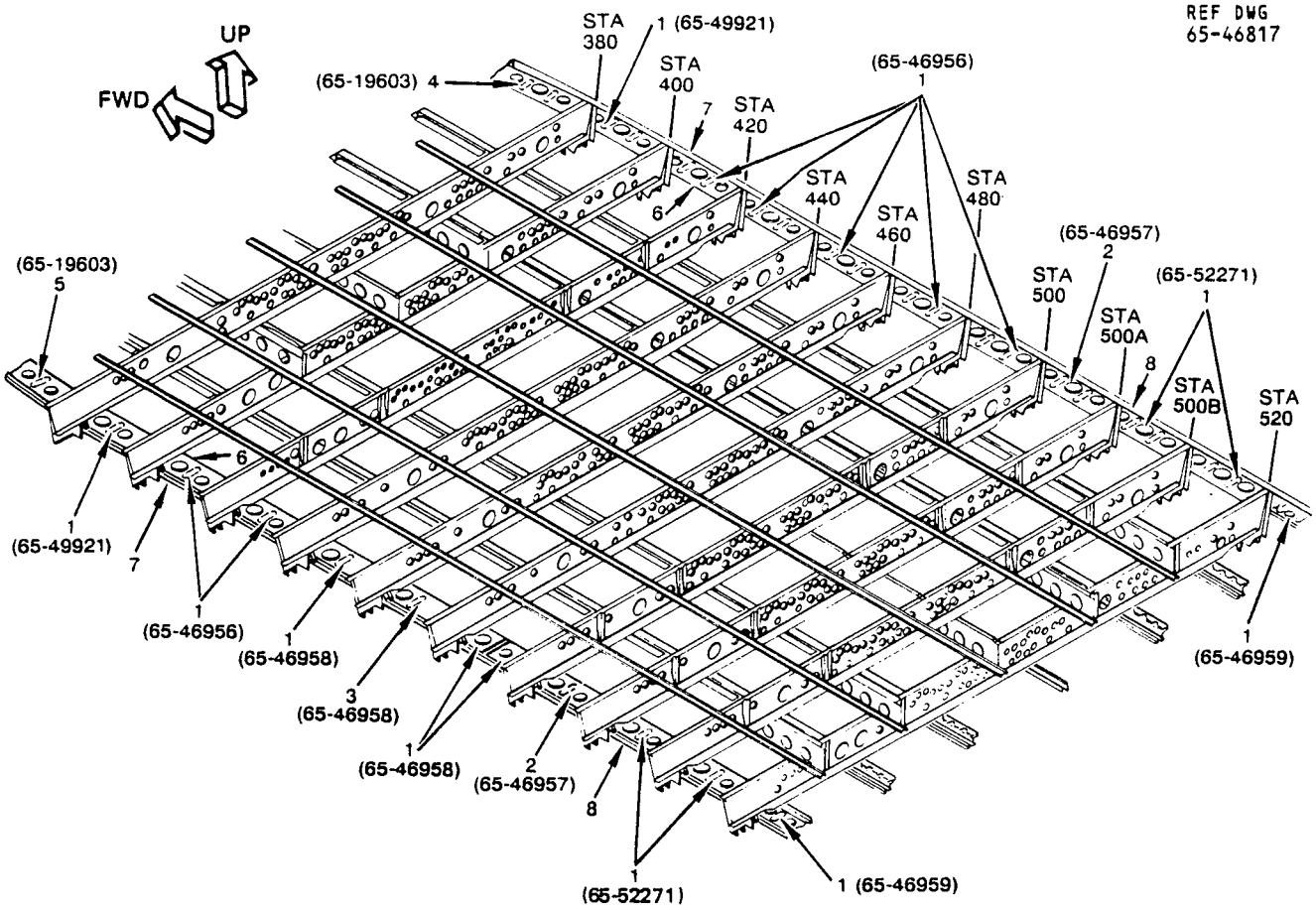

DETAIL II

ITEM	DESCRIPTION	GAGE	MATERIAL	EFFECTIVITY
1	SHEAR WEB	0.036	CLAD 7075-T6	
2	SHEAR WEB	0.040	CLAD 7075-T6	
3	SHEAR WEB	0.036 0.040	CLAD 7075-T6 CLAD 7075-T6	C D
4	CREASE BEAM ASSY SHEAR WEB CHORD - TEE	 0.032	 CLAD 7075-T6 BAC1506-1601 7075-T6	
5	CREASE BEAM ASSY SHEAR WEB CHORD - TEE	 0.032	 CLAD 7075-T6 BAC1506-1132 7075-T6	
6	INBOARD CHORD		BAC1515-531 7075-T6511	
7	OUTBOARD CHORD		BAC1506-1133 7075-T6511	
8	OUTER CHORD		BAC1506-1586 2024-T3511	

LIST OF MATERIALS FOR DETAIL II

333343

Section 43 Crease Beam Identification
Figure 12 (Sheet 3)

REF DWG
65-46817

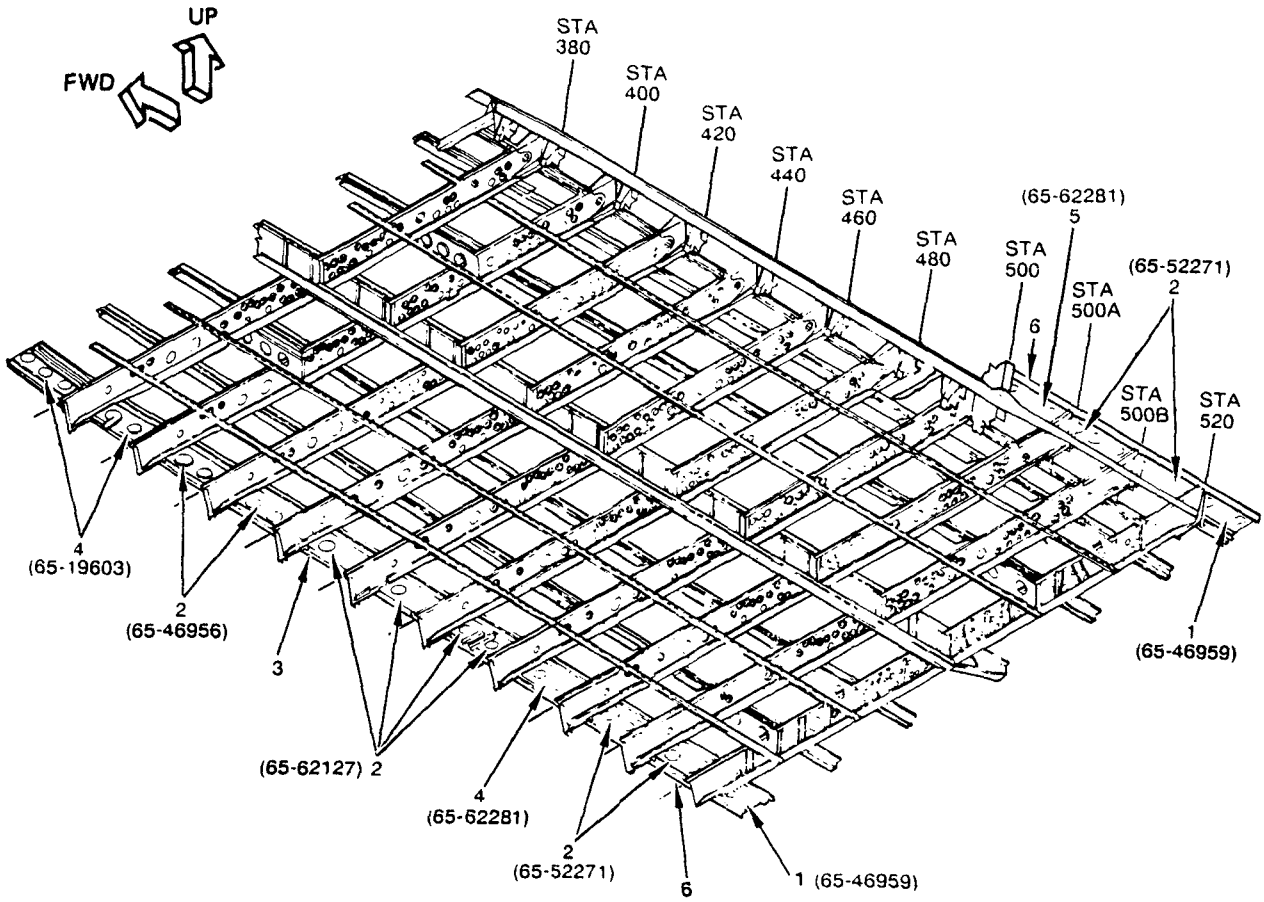

DETAIL III

ITEM	DESCRIPTION	GAGE	MATERIAL	EFFECTIVITY
1	SHEAR WEB	0.036	CLAD 7075-T6	
2	SHEAR WEB	0.040	CLAD 7075-T6	
3	OUTBOARD CHORD		BAC1506-1133 7075-T6511	
4	CREASE BEAM ASSY			
	SHEAR WEB	0.040	CLAD 7075-T6	
	ZEE		BAC1517-1468 CLAD 2024-T3	
5	SHEAR WEB ASSY			
	SHEAR WEB	0.063	CLAD 7075-T6	
			BAC1517-1468 CLAD 2024-T3	
6	OUTER CHORD		BAC1506-1586 2024-T3511	

LIST OF MATERIALS FOR DETAIL III

333345

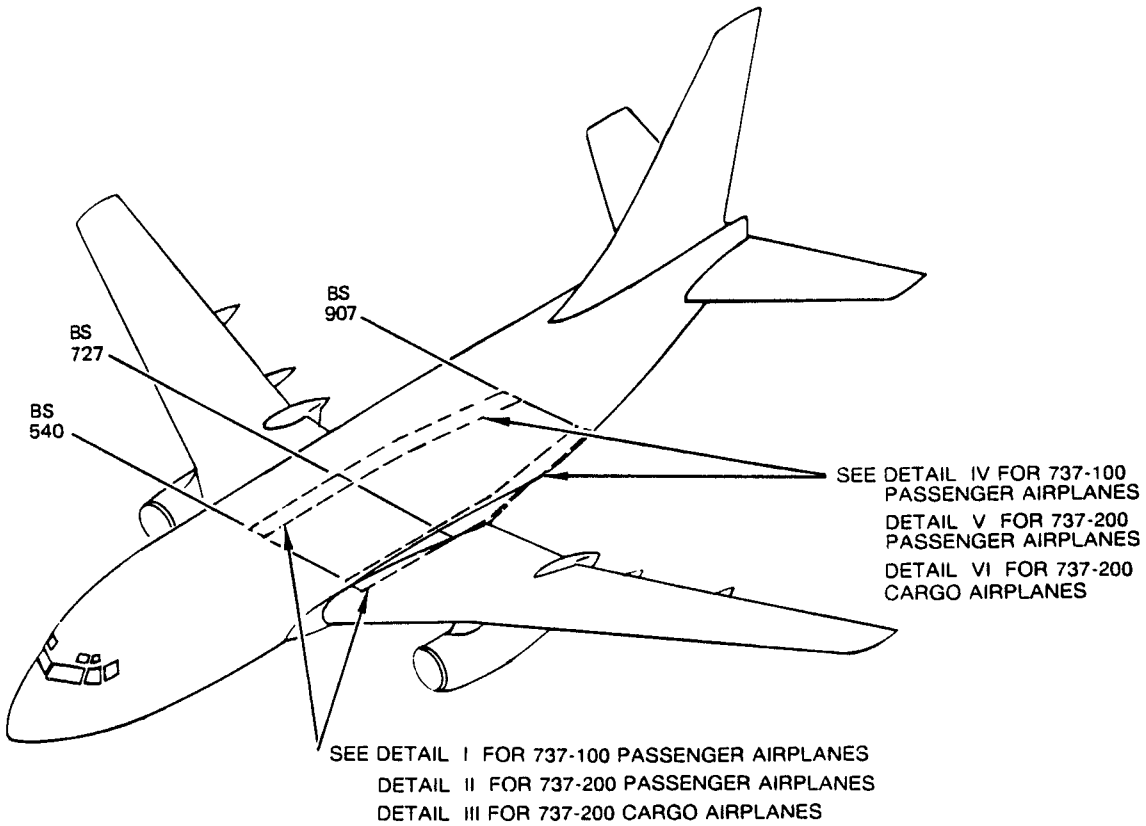

NOTES

- [A] FOR CUM LINE NUMBERS: 6 THRU 503
- [B] FOR AIRPLANES NOT LISTED IN [A]
- [C] FOR CUM LINE NUMBERS: 139 THRU 486
- [D] FOR AIRPLANES NOT LISTED IN [C]
- [E] FOR CUM LINE NUMBERS: 1 THRU 217
- [F] FOR AIRPLANES NOT LISTED IN [E]
- [G] FOR AIRPLANES WITH SB 53–1122 INCORPORATED
- [H] FOR AIRPLANES NOT LISTED IN [G]

Section 46 Crease Beam Identification
Figure 13 (Sheet 1)

EFFECTIVITY
737-100 PASSENGER AIRPLANES

REF DWG
65-46818

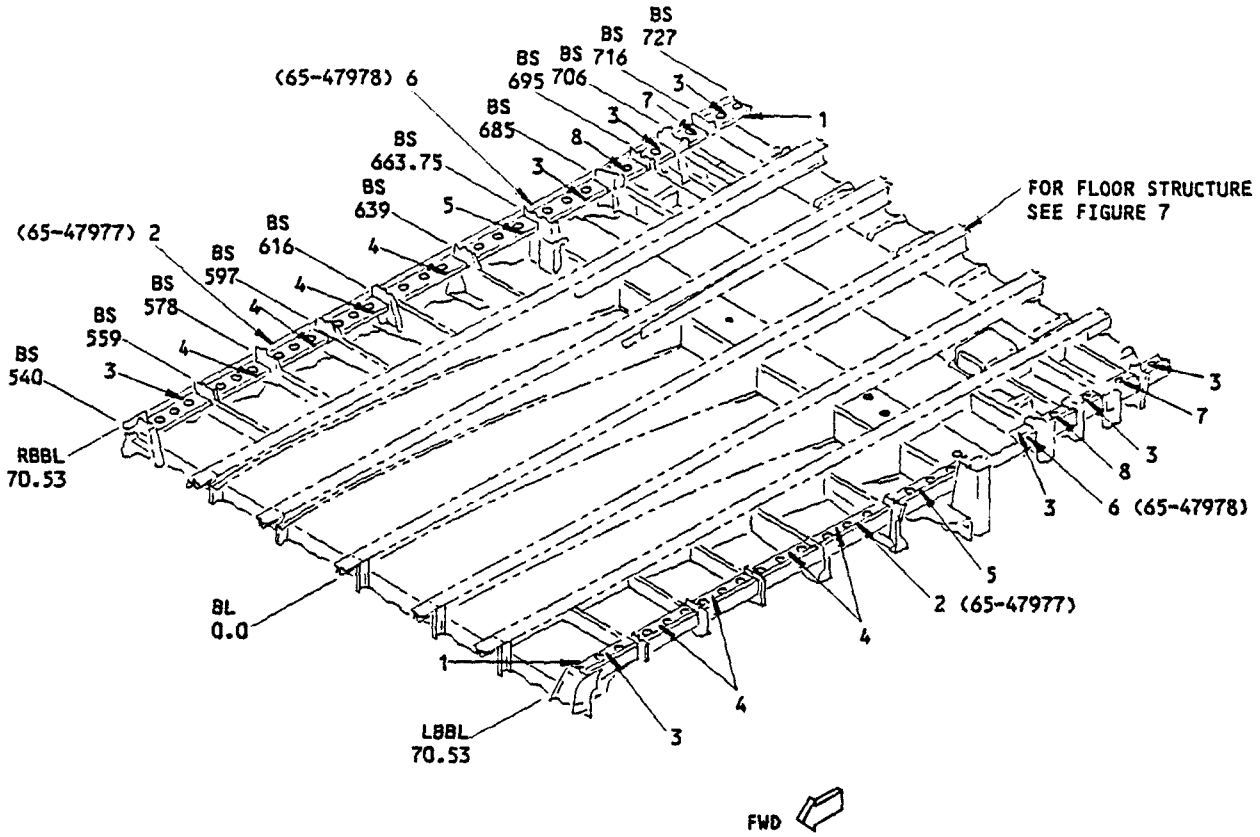

DETAIL I

ITEM	DESCRIPTION	GAGE	MATERIAL	EFFECTIVITY
1	CHORD - INBD		BAC1515-531 7075-T6	
2	CHORD - OUTBD		BAC1506-1771 7075-T6511	
3	SHEAR WEB	0.040	CLAD 7075-T6	
4	SHEAR WEB	0.032 0.040	CLAD 7075-T6 CLAD 7075-T6	H G
5	SHEAR WEB	0.036 0.045	CLAD 7075-T6 CLAD 7075-T6	H G
6	CHORD - OUTBD		BAC1506-1777 7075-T6511	
7	SHEAR WEB	0.050	CLAD 7075-T6	
8	SHEAR WEB	0.045	CLAD 7075-T6	

LIST OF MATERIALS FOR DETAIL I

Section 46 Crease Beam Identification
Figure 13 (Sheet 2)

EFFECTIVITY
737-200 PASSENGER AIRPLANES

REF DWG
65-46818

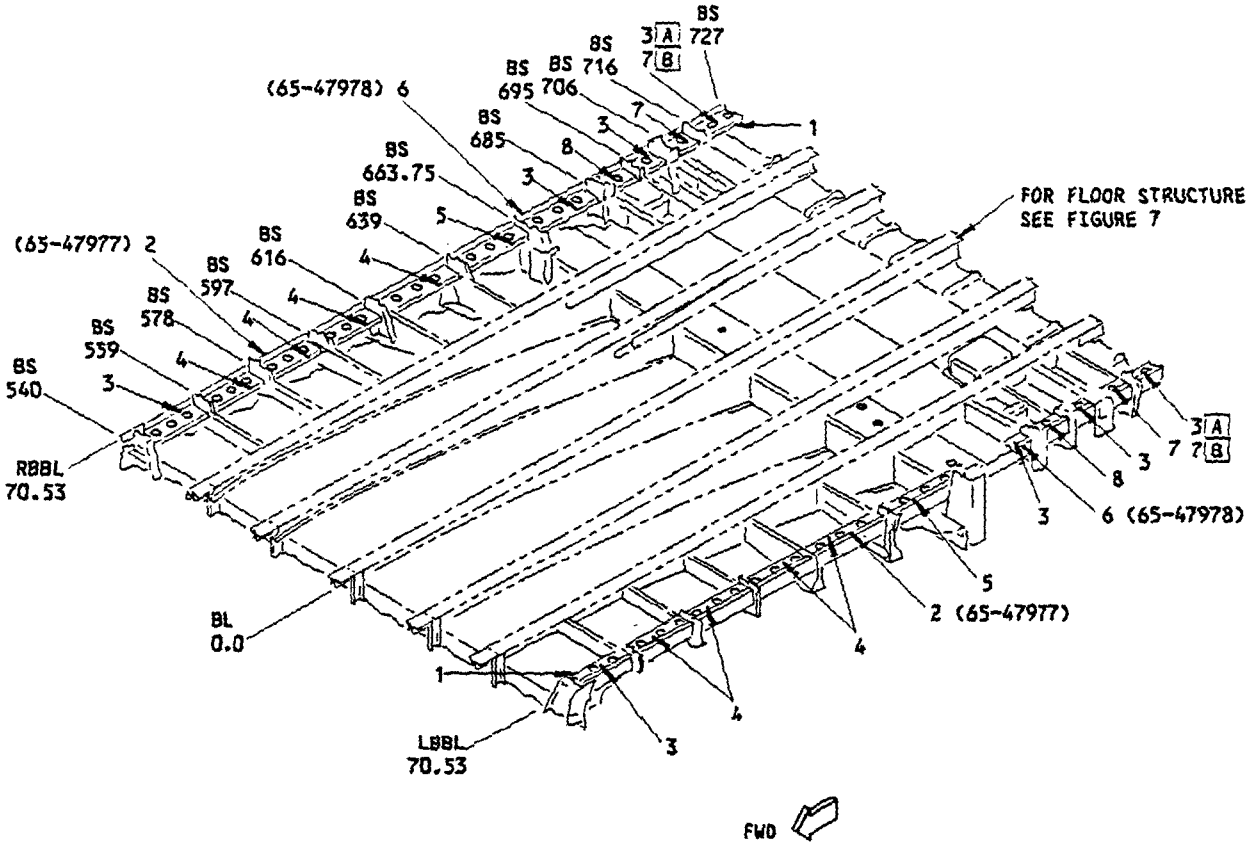

DETAIL II

ITEM	DESCRIPTION	GAGE	MATERIAL	EFFECTIVITY
1	CHORD - INBD		BAC1515-531 7075-T6	
2	CHORD - OUTBD		BAC1506-1771 7075-T6511	
3	SHEAR WEB	0.040	CLAD 7075-T6	
4	SHEAR WEB	0.032 0.040	CLAD 7075-T6 CLAD 7075-T6	H G
5	SHEAR WEB	0.036 0.045	CLAD 7075-T6 CLAD 7075-T6	H G
6	CHORD - OUTBD		BAC1506-1777 7075-T6511	
7	SHEAR WEB	0.050	CLAD 7075-T6	
8	SHEAR WEB	0.045	CLAD 7075-T6	

LIST OF MATERIALS FOR DETAIL II

Section 46 Crease Beam Identification
Figure 13 (Sheet 3)

EFFECTIVITY
737-200 CARGO AIRPLANES

REF DWG
65-46818

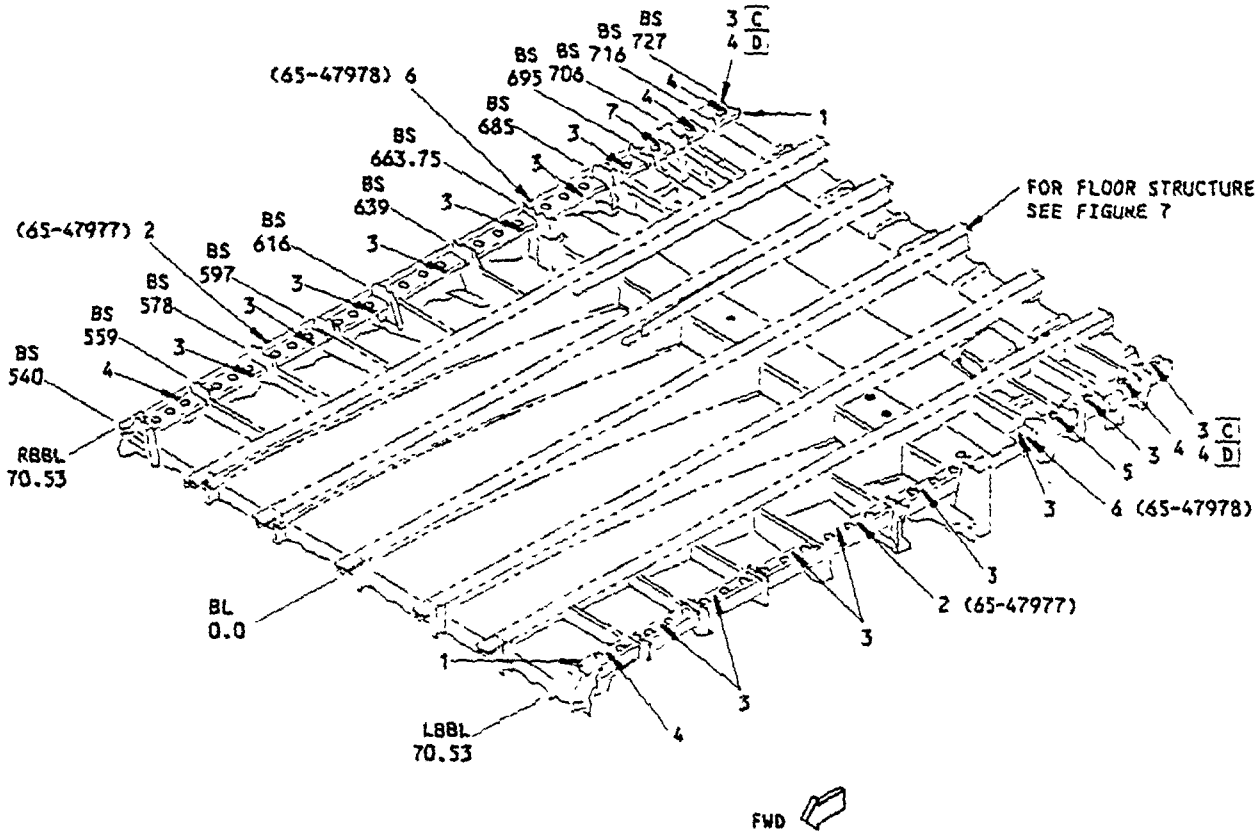

DETAIL III

ITEM	DESCRIPTION	GAGE	MATERIAL	EFFECTIVITY
1	CHORD - INBD		BAC1515-531 7075-T6	
2	CHORD - OUTBD		BAC1506-1771 7075-T6511	
3	SHEAR WEB	0.040	CLAD 7075-T6	
4	SHEAR WEB	0.050	CLAD 7075-T6	
5	SHEAR WEB	0.045	CLAD 7075-T6	
6	CHORD - OUTBD		BAC1506-1777 7075-T6511	

LIST OF MATERIALS FOR DETAIL III

Section 46 Crease Beam Identification
Figure 1 (Sheet 2)

REF DWG
65-46818

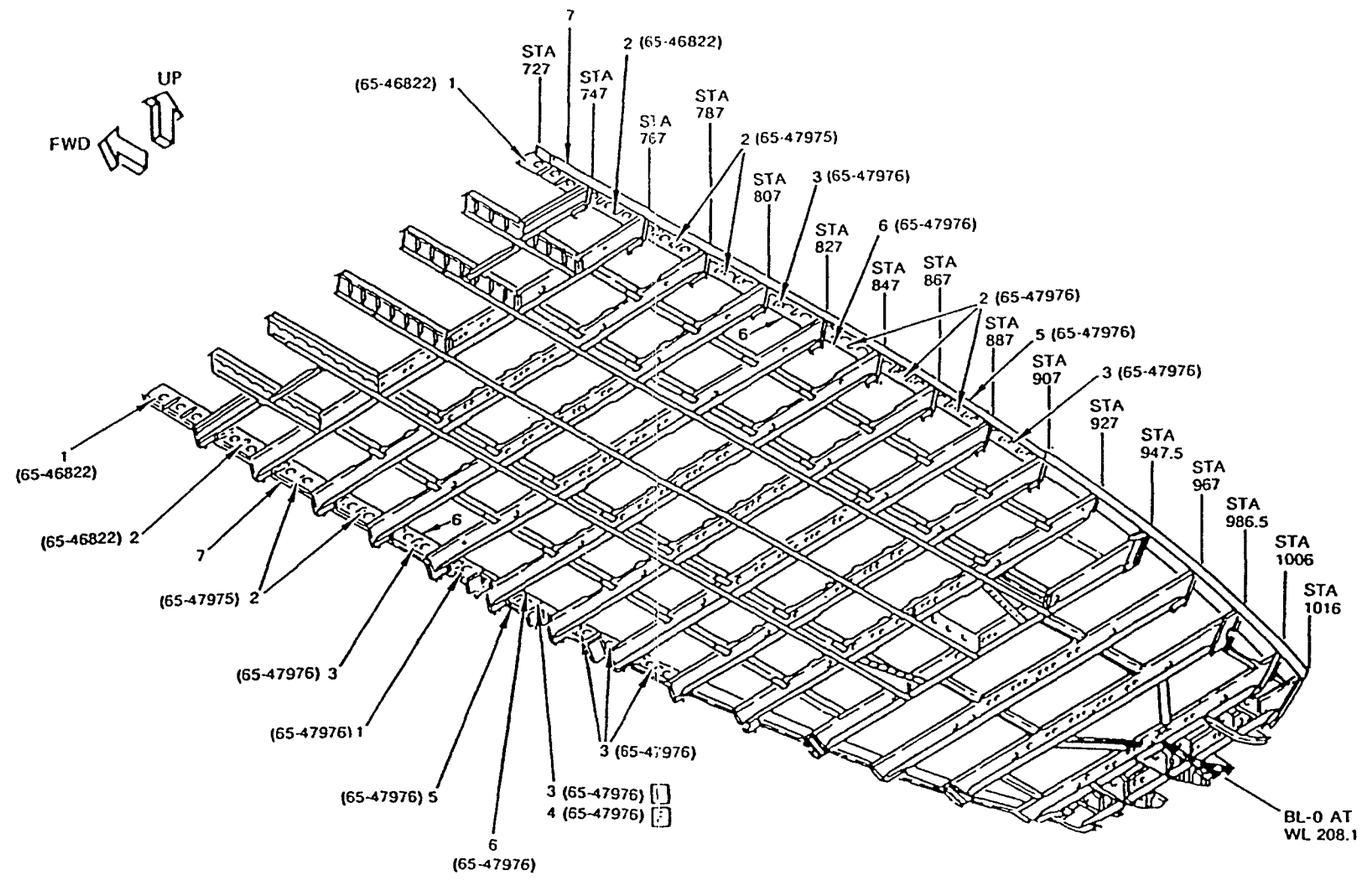

DETAIL IV

ITEM	DESCRIPTION	GAGE	MATERIAL	EFFECTIVITY
1	SHEAR WEB	0.045	CLAD 7075-T6	
2	SHEAR WEB	0.032	CLAD 7075-T6	
3	SHEAR WEB	0.036	CLAD 7075-T6	
4	SHEAR WEB	0.040	CLAD 7075-T6	
5	OUTER CHORD		BAC1506-1773 7075-T6	
6	INBOARD CHORD		BAC1515-531 7075-T6	
7	OUTER CHORD		BAC1506-1772 7075-T6511	

333477

LIST OF MATERIALS FOR DETAIL IV

Section 46 Crease Beam Identification
Figure 13 (Sheet 5)

EFFECTIVITY
737-200 PASSENGER AIRPLANES

REF DWG
65-46818

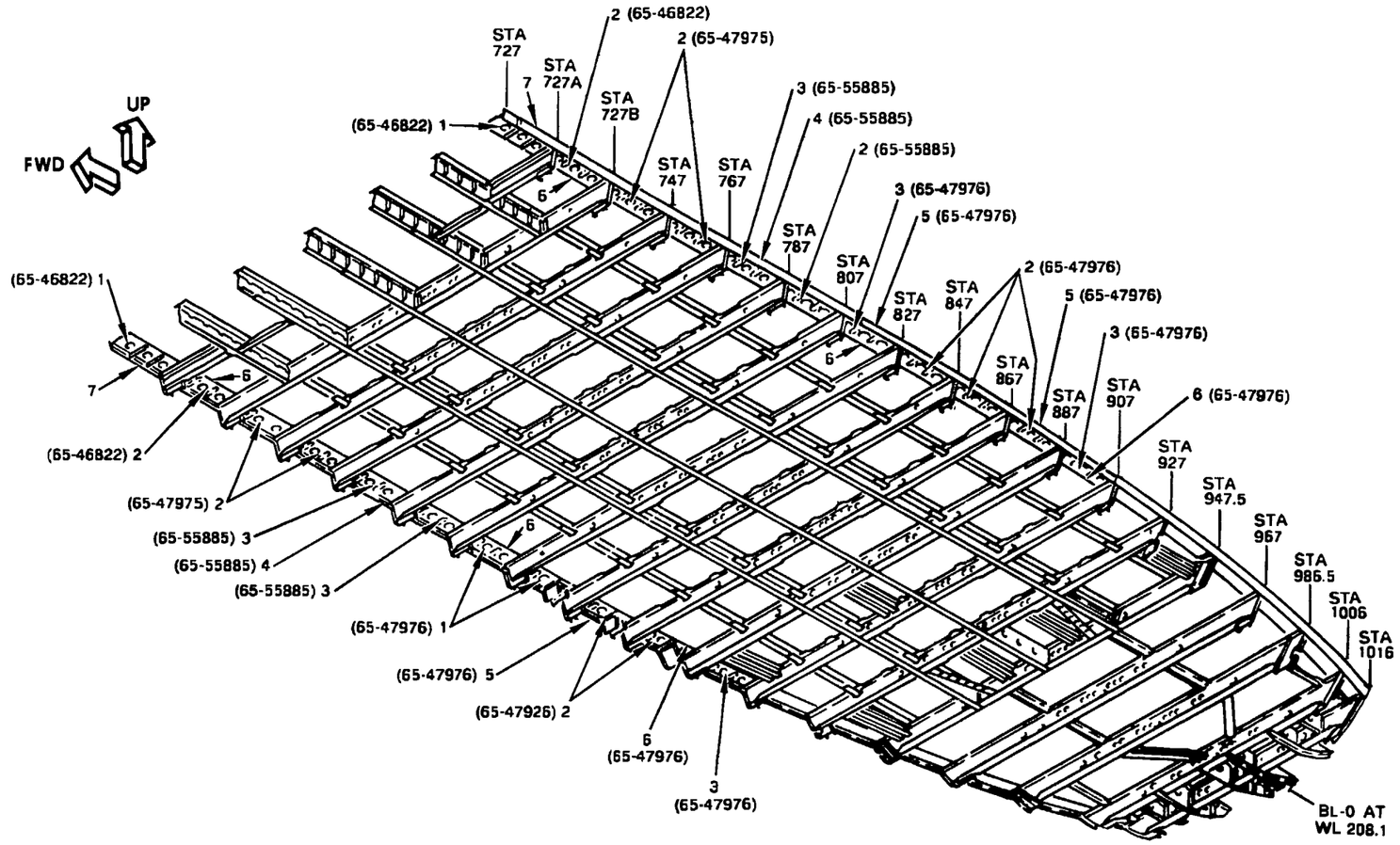

DETAIL V

ITEM	DESCRIPTION	GAGE	MATERIAL	EFFECTIVITY
1	SHEAR WEB	0.045	CLAD 7075-T6	
2	SHEAR WEB	0.032	CLAD 7075-T6	
3	SHEAR WEB	0.036	CLAD 7075-T6	
4	OUTER CHORD		BAC1506-1332 7075-T6511	
5	OUTER CHORD		BAC1506-1773 7075-T6	
6	INBOARD CHORD		BAC1515-531 7075-T6	
7	OUTER CHORD		BAC1506-1772 7075-T6511	

333477

LIST OF MATERIALS FOR DETAIL V

Section 46 Crease Beam Identification
Figure 13 (Sheet 6)

BOEING PROPRIETARY - Copyright © - Unpublished Work - See title page for details.

REF DWG
65-46818

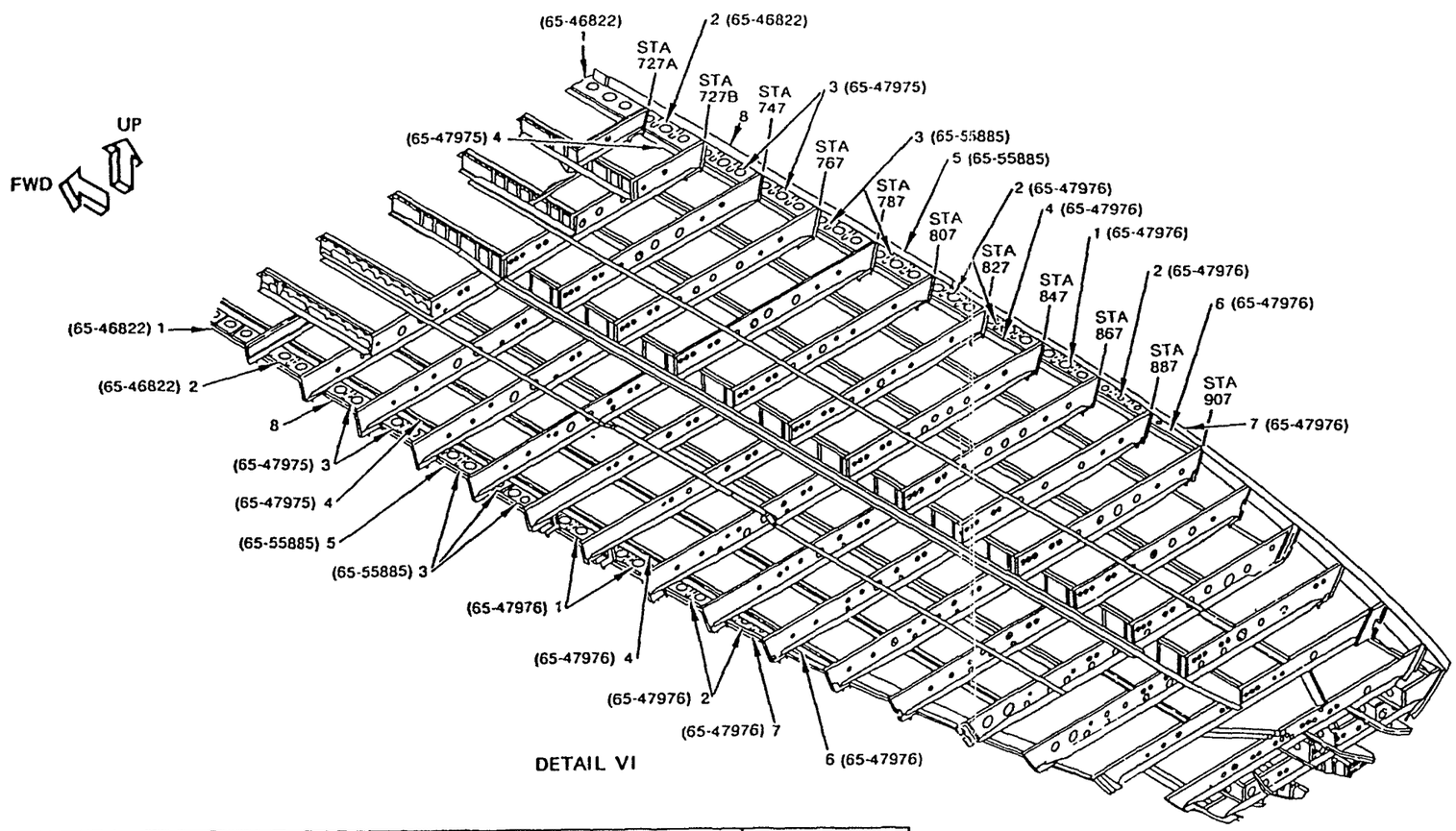

ITEM	DESCRIPTION	GAGE	MATERIAL	EFFECTIVITY
1	SHEAR WEB	0.045	CLAD 7075-T6	
2	SHEAR WEB	0.040	CLAD 7075-T6	
3	SHEAR WEB	0.040	CLAD 7075-T6	
4	ZEE		BAC1517-1468 CLAD 2024-T3	
5	OUTER CHORD		BAC1506-1332 7075-T6511	
6	SHEAR WEB	0.056	CLAD 7075-T6	
7	OUTER CHORD		BAC1506-1773 7075-T6	
8	OUTBOARD CHORD		BAC1506-1772 7075-T6511	

LIST OF MATERIALS FOR DETAIL VI

333479

Section 46 Crease Beam Identification
Figure 13 (Sheet 7)

SERVICE BULLETIN REPAIRS

The following Service Bulletins contain stringer repairs which are available for use where specific damage has been encountered. Usually, the Service Bulletin also covers preventive modification data which operators are encouraged to use to eliminate the need for repair.

DAMAGED AREA	CUM LINE NUMBER EFFECTIVITY [A]	SB NUMBER
FUSELAGE - STRINGER REPLACEMENT, LEFT BODY STATION 259 TO BODY STATION 303 FORWARD OF ENTRY DOOR, AND STRINGER REINFORCEMENT, RIGHT BODY STATION 277	1 THRU 301	737-53-1040
LOWER BULKHEAD STATION 227.8	1 THRU 345	737-53-1054
STRINGER 18A SHEAR BEAM TO B.S. 664 FRAME ATTACHMENT MODIFICATION	1 THRU 557	737-53-1056
FUSELAGE - STRINGER 18A SHEAR BEAM INSPECTION, REPAIR AND MODIFICATION	1 THRU 919	737-53-1066
FUSELAGE - BODY STATION 727 BULKHEAD, OUTBOARD CHORD INSPECTION AND REPLACEMENT	1 THRU 999	737-53-1088
STRINGER 18A AT BS 663.75	1 THRU 433, 436, 437	737-57-1087
FUSELAGE - STRINGER 16 AT WING SCANNING LIGHT CUTOUT, INSPECTION, PREVENTATIVE CHANGE, REPAIR	ALL 737-100/200 AIRPLANES	737-53-1145

[A] FOR AIRPLANES ON WHICH PREVENTIVE MODIFICATION HAS NOT BEEN ACCOMPLISHED

APPLICABILITY
THIS REPAIR DOES NOT APPLY TO DAMAGE WHICH IS WITHIN 20 INCHES OF A STRINGER SPLICE.

REPAIR INSTRUCTIONS

1. Find the limits of the damage and remove the skin-to-stringer attach rivets in the damage area.
2. Cut out and remove the damaged part of the stringer. Be careful not to damage the skin. If you damage the skin, refer to 53-30-3.
3. Choose the applicable repair scheme. Repair the damage to one flange of the stringer as shown in Detail V. Repair other damage as shown in either Detail VI or Detail VII. See Figure 2 to repair longitudinal cracks found in one corner of the stringer.
4. Make the repair parts for the applicable stringer section. Refer to table I.
5. Assemble the repair parts and drill the fastener holes. Refer to Table III for repair fastener types, sizes and spacing.
6. Disassemble the repair parts.
7. Break all the sharp edges 0.015 to 0.030 R.
8. Remove all nicks, scratches, burrs, sharp edges and corners from the initial and repair parts.
9. Apply the chemical conversion coating to the repair parts and to the cut edges of the initial parts as shown in 51-10-2.
10. Apply one layer of BMS 10-11, Type I primer to the repair parts and to the cut edges of the initial parts. Refer to 51-21 of the Maintenance Manual.
11. Install the repair parts and make a faying surface seal with BMS 5-95 sealant.
12. Apply the finish as shown in 51-21 of the Maintenance Manual.

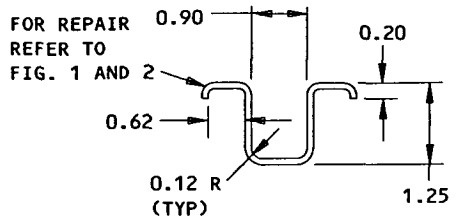

TYPE I

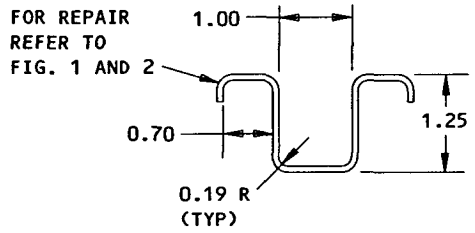

TYPE II

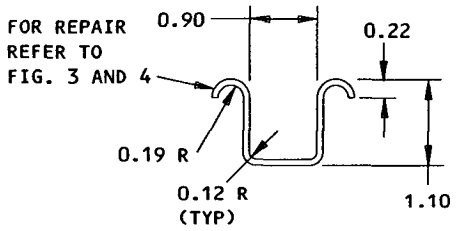

TYPE III
(CROWN)

NOTES

- SEE FIGURES 3 AND 4 FOR THE REPAIR OF TYPE III STRINGERS (FUSELAGE CROWN AREA).
- THIS REPAIR WILL NOT HAVE AN EFFECT ON THE STRUCTURALLY SIGNIFICANT ITEMS GIVEN IN SRM 51-00-4, FIGURE 3. THEREFORE, NO CHANGE TO THE SUPPLEMENTAL STRUCTURAL INSPECTION DOCUMENT (SSID) INSPECTION PROGRAM IS NECESSARY.
- ON SOME AIRPLANES CAPPING STRIPS ARE INSTALLED ACROSS THE FLANGES OF THE STRINGER BETWEEN THE FRAMES. THESE CAPPING STRIPS MUST BE KEPT AND INSTALLED AGAIN WHEN A REPAIR IS MADE. THE REPAIR FASTENERS SHOULD BE INSTALLED IN THE INITIAL FASTENER LOCATIONS OF THE CAPPING STRIPS.
- THE REPAIR OF A 0.040 GAGE STRINGER IS SHOWN.
- USE SHIMS AS NECESSARY TO MAKE THE SURFACES FLUSH WHEN YOU REPAIR TAPERED STRINGERS.

Fuselage Stringer Repair - Stringer 14 to Stringer 28
Figure 1 (Sheet 1)

BOEING PROPRIETARY - Copyright © - Unpublished Work - See title page for details.

NOTES (CONT)

- USE SHIMS TO KEEP GAPS 0.01 INCH OR LESS.
- WHEN YOU USE THIS REPAIR REFER TO:
  - 51-10-1 FOR INVESTIGATION AND CLEANUP OF DAMAGE
  - 51-20-2 FOR PROTECTIVE TREATMENT OF METAL
  - 51-20-4 FOR SEALING OF REPAIRS
  - 51-30 FOR FASTENER CODE, REMOVAL, INSTALLATION, HOLE SIZES AND EDGE MARGINS
  - 51-21 OF THE MAINTENANCE MANUAL FOR INTERIOR AND EXTERIOR FINISHES.

[A] USE BACR15CE()D TYPE FASTENERS.

[B] USE MS20470D() TYPE FASTENERS.

[C] USE THE SAME SIZE AND SPACING AS THE INITIAL FASTENERS WHICH ATTACH THE STRINGER TO THE SKIN.

[D] LOCATE THE FASTENERS MID-WAY BETWEEN THE FASTENERS IN THE SKIN.

[E] REFER TO 51-30-3 FOR FASTENER SUBSTITUTION. IF THE INITIAL FASTENER HOLE IS DAMAGED, USE 1/32 INCH OVERSIZE FASTENER. REFER TO 51-30-5.

[F] WHEN YOU REPAIR A TAPERED STRINGER, USE A REPAIR SECTION ONE GAGE THICKER THAN THE PART OF THE SECTION THAT WAS REMOVED FROM THE DAMAGED AREA.

[G] SEE TABLE III FOR THE APPLICABLE REPAIR SECTION PART NUMBER OF DETAIL NUMBER. IF THE REPAIR SECTION IS MADE FROM DETAILS I THROUGH IV, THE THICKNESS MUST BE ONE GAGE THICKER THAN THE INITIAL STRINGER. [M] MAKE A REPLACEMENT STRINGER CLIP IF THE PART 6 CHANNEL IS USED WHERE A STRINGER CLIP IS INSTALLED. THE REPLACEMENT CLIP MUST BE:
- THE SAME MATERIAL, CONFIGURATION, AND GAGE AS THE INITIAL CLIP
- EQUAL IN WIDTH TO THE INITIAL CLIP MINUS TWO TIMES THE GAGE OF THE PART 6 CHANNEL.

[H] USE THE SAME SPACING AS THE INITIAL FASTENERS WHICH ATTACH THE STRINGER TO THE SKIN.

[I] USE WHEN NECESSARY. USE A MATERIAL GAGE WHICH WILL GIVE A NESTING FIT.

[J] USE THE SAME GAGE AS THE INITIAL STRINGER.

[K] MINIMUM QUANTITY OF FASTENERS NECESSARY IN EACH LONGITUDINAL LINE OF FASTENERS ON EACH SIDE OF THE DAMAGE.

[L] USE THE SAME SHAPE AND GAGE AS THE INITIAL STRINGER. SEE TABLE II FOR THE MINIMUM BEND RADIUS FOR THE 7075-O AND 7075-T6 MATERIALS. IF THE HAT SECTION IS MADE FROM 7075-O MATERIAL, THE PART MUST BE HEAT TREATED TO 7075-T6 AFTER FORMING.

[M] TO MAKE A FORMED PART, USE A BEND RADIUS THAT WILL ALLOW THE REPAIR PART TO NEST IN THE INITIAL STRINGER. SEE TABLE II FOR THE MINIMUM BEND RADIUS FOR THE 7075-O AND 7075-T6 MATERIALS. IF A REPAIR PART IS MADE FROM 7075-O MATERIAL, THE PART MUST BE HEAT TREATED TO 7075-T6 AFTER FORMING.

[N] MAKE THIS PART AS NECESSARY. THIS PART MUST BE LONGER THAN THE PART 1 HAT SECTION, OR PART 6 CHANNEL BY ONE FASTENER INSTALLED AT EACH END. ADJUST THE GAGE OF THIS PART AS NECESSARY.

[O] THE OUTER RADII OF THIS PART IS SMALLER THAN THE INNER RADII OF THE INITIAL SECTION OR THE PART 5 HAT SECTION. ADJUST THE GAGE OF THE PART 4 FILLER AS NECESSARY IN THE REPAIR SHOWN IN DETAIL VII.

SYMBOLS

INITIAL FASTENER LOCATION

REPAIR FASTENER LOCATION

REPAIR MATERIAL			
PART		QTY	MATERIAL
1	HAT [F] SECTION	1	CLAD 7075-T6 [G]
2	FILLER	1	CLAD 7075-T6 [J]
3	SHIM [I]	AS REQ'D	CLAD 2024-T4 OR CLAD 7075-T6
4	FILLER [N]	AS REQ'D	CLAD 2024-T4 OR CLAD 7075-T6
5	HAT SECTION	1	CLAD 7075-T6 [L]
6	CHANNEL	1	CLAD 7075-T6 [G]
7	ANGLE	AS REQ'D	CLAD 7075-T6 [G]

TABLE I

Fuselage Stringer Repair - Stringer 14 to 28
Figure 1 (Sheet 2)

GAGE	ALLOY	
	7075-O	7075-T6
0.028	0.06	0.14
0.032	0.06	0.16
0.036	0.06	0.19
0.040	0.06	0.19
0.045	0.09	0.25
0.050	0.09	0.25
0.056	0.12	0.28
0.063	0.12	0.31
0.071	0.12	0.38
0.080	0.19	0.44
0.090	0.19	0.50

MINIMUM STANDARD INSIDE BEND RADII
ROOM TEMPERATURE FORMING
TABLE II

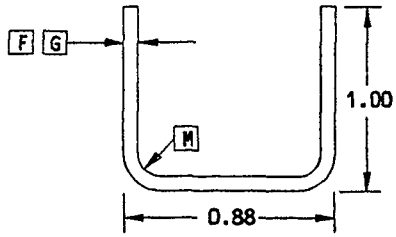

CHANNEL
DETAIL I

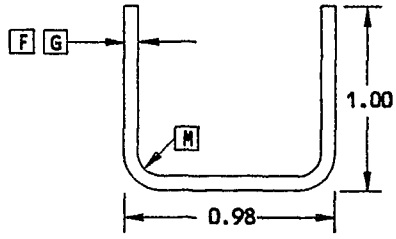

CHANNEL
DETAIL II

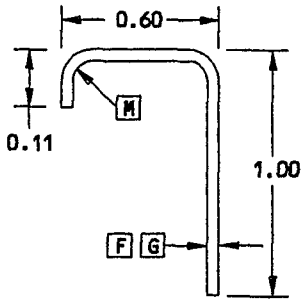

ANGLE
DETAIL III

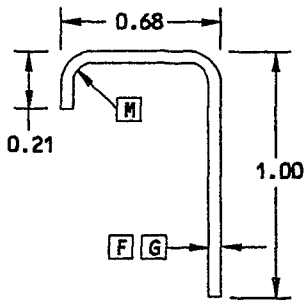

ANGLE
DETAIL IV

Fuselage Stringer Repair - Stringer 14 to Stringer 28
Figure 1 (Sheet 3)

STRINGER REPAIR SECTIONS AND FASTENERS [E]								
INITIAL STRINGER		REPAIR SECTION			FASTENER [A]		FASTENER [B]	
INITIAL SECTION	GAGE	⊔	⊓	⊔	TYPE [C]	MIN QTY [K]	TYPE [D] & [H]	QTY [K]
BAC1498-107	0.040 0.040	BAC1498-130 BAC1498-133	BAC1493-521 BAC1493-521	BAC1493-520 BAC1493-520	BACR15CE()D	5	MS20470D5	4
BAC1498-108	0.032 0.032	BAC1498-130 BAC1498-133	BAC1493-513 BAC1493-513	BAC1493-479 [O] BAC1493-479 [O]				
BAC1498-138	0.032	—	BAC1493-547	BAC1493-204 [O] OR BAC1493-412				
TYPE II	0.032	—	BAC1493-547	BAC1493-204 [O] OR BAC1493-412				
BAC1498-139	0.036	—	BAC1493-547	BAC1493-204 [O] OR BAC1493-412				
TYPE II	0.036	—	BAC1493-547	BAC1493-204 [O] OR BAC1493-412				
BAC1498-141	0.045	BAC1498-132	BAC1493-547	BAC1493-209			MS20470D6	
TYPE II	0.045	BAC1498-132	BAC1493-547	BAC1493-209			MS20470D6	
BAC1498-155	0.028	—	SEE DETAIL III	SEE DETAIL I			MS20470D5	
TYPE I	0.028	—	SEE DETAIL III	SEE DETAIL I				
BAC1498-156	0.032	BAC1498-117	BAC1493-659	BAC1493-249				
TYPE I	0.032	BAC1498-117	BAC1493-659	BAC1493-249				
BAC1498-157	0.036	BAC1498-117	BAC1493-659	BAC1493-249				
TYPE I	0.036	BAC1498-117	BAC1493-659	BAC1493-249				
BAC1498-158	0.040	BAC1498-117	BAC1493-574	BAC1493-249				
TYPE I	0.040	BAC1498-117	BAC1493-574	BAC1493-249				
BAC1498-159	0.045	—	SEE DETAIL III	SEE DETAIL I			MS20470D6	
TYPE I	0.045	—	SEE DETAIL III	SEE DETAIL I				
BAC1498-160	0.050	—	BAC1493-574	SEE DETAIL I				5
TYPE I	0.050	—	SEE DETAIL III	SEE DETAIL I				
BAC1498-161	0.056	—	BAC1493-574	SEE DETAIL I				
TYPE I	0.056	—	SEE DETAIL III	SEE DETAIL I				

TABLE III

Fuselage Stringer Repair - Stringer 14 to Stringer 28
Figure 1 (Sheet 4)

C30272

STRINGER REPAIR SECTIONS AND FASTENERS [E]								
INITIAL STRINGER		REPAIR SECTION			FASTENER [A]		FASTENER [B]	
INITIAL SECTION	GAGE				TYPE [C]	MIN QTY [K]	TYPE [D] & [H]	QTY [K]
BAC1498-162	0.063	—	SEE DETAIL III	SEE DETAIL I	BACR15CE()D	6	MS20470D6	6
TYPE I	0.063	—	SEE DETAIL III	SEE DETAIL I				
TYPE II	0.063	—	SEE DETAIL IV	SEE DETAIL II				
BAC1498-163	0.071	—	SEE DETAIL III	SEE DETAIL I				
TYPE I	0.071	—	SEE DETAIL III	SEE DETAIL I				
TYPE II	0.071	—	SEE DETAIL IV	SEE DETAIL II				
TYPE II	0.080	—	SEE DETAIL IV	SEE DETAIL II		7		7
TYPE II	0.090	—	SEE DETAIL IV	SEE DETAIL II		8		7

TABLE III (CONTINUED)

Fuselage Stringer Repair - Stringer 14 to Stringer 28
Figure 1 (Sheet 5)

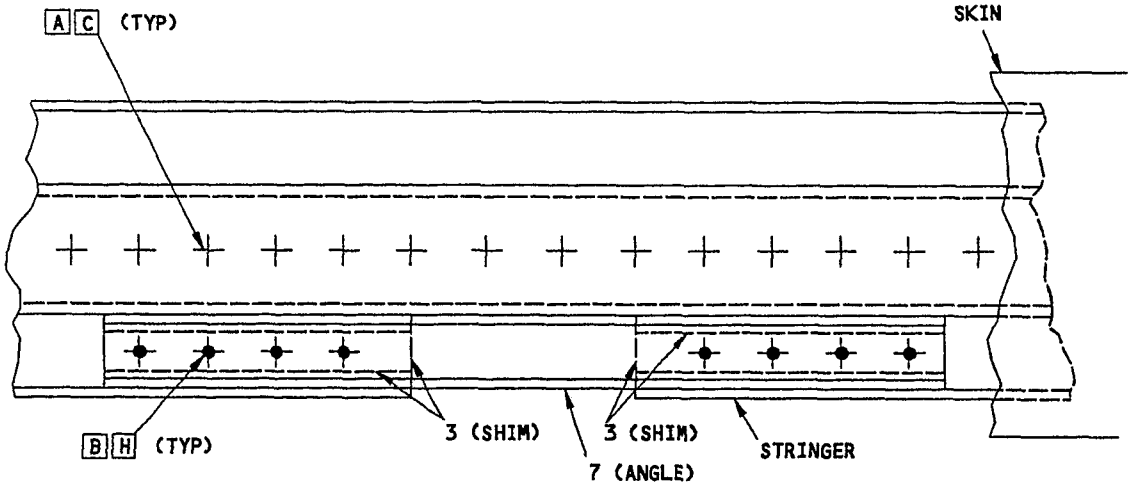

PLAN VIEW

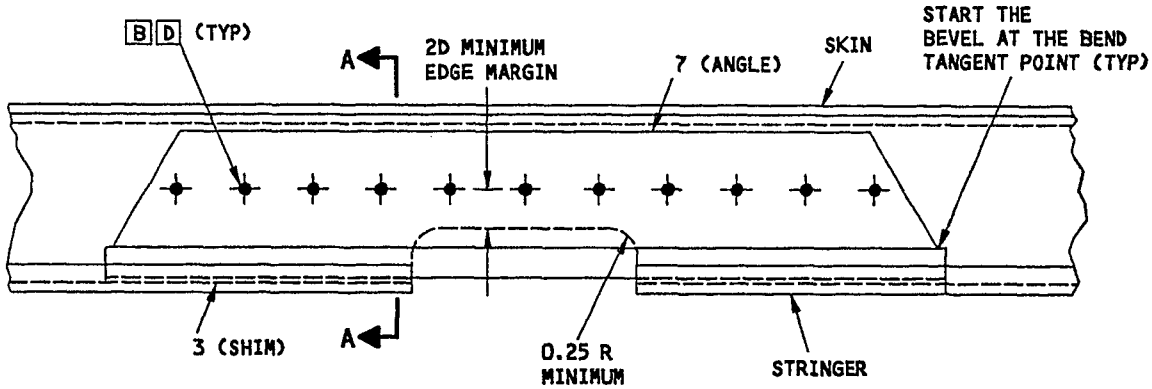

SIDE VIEW

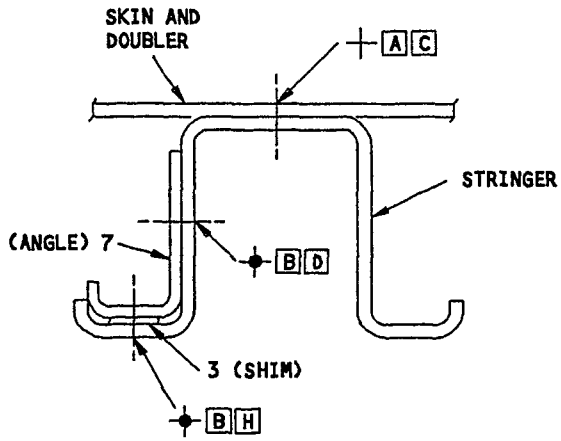

SECTION A-A

INSTALLATION OF REPAIR PARTS 3 AND 7
DETAIL V
Fuselage Stringer Repair - Stringer 14 to Stringer 28
Figure 1 (Sheet 6)

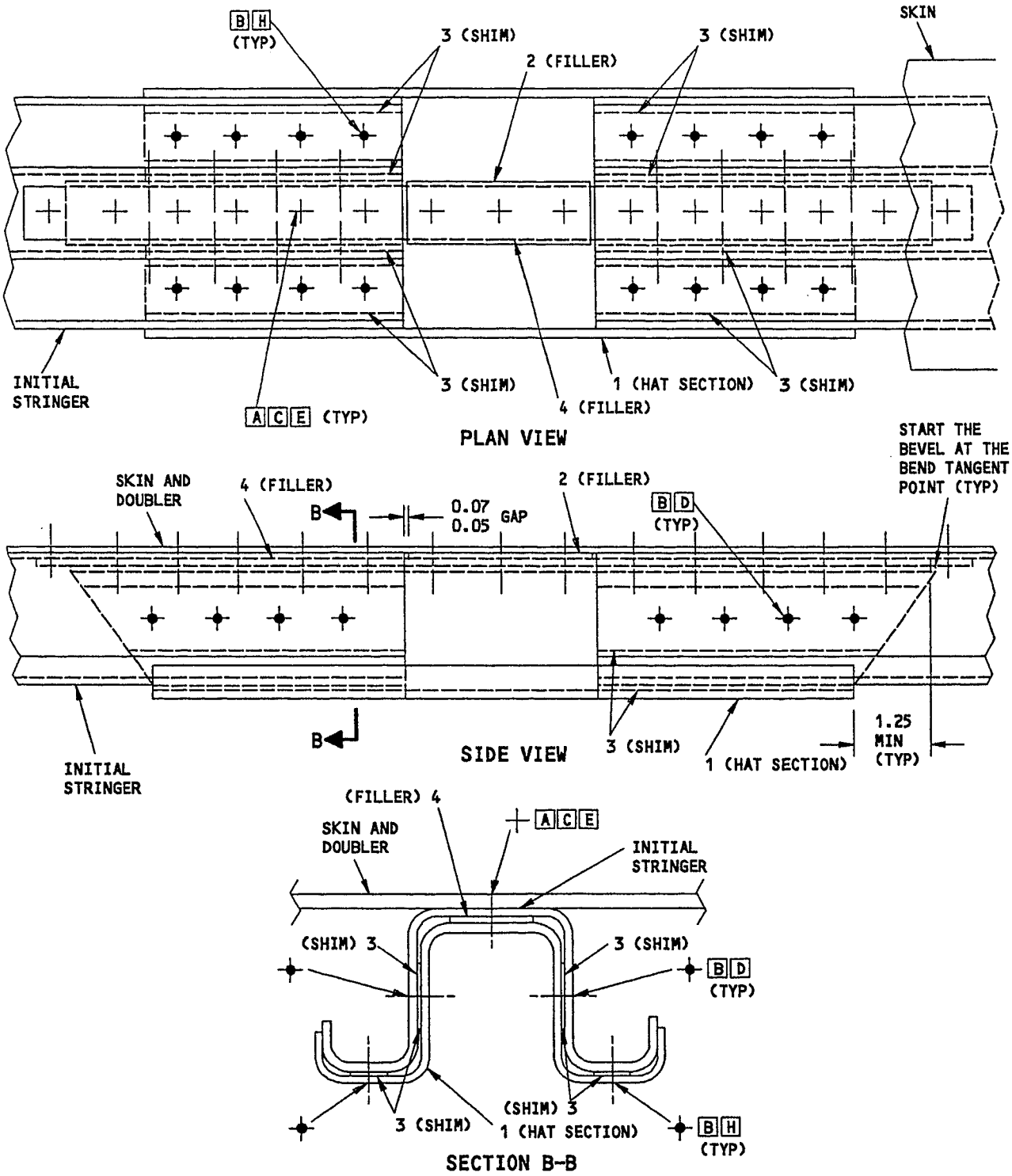

INSTALLATION OF REPAIR PARTS 1,3 AND 4
DETAIL VI
Fuselage Stringer Repair - Stringer 14 to Stringer 28
Figure 1 (Sheet 7)

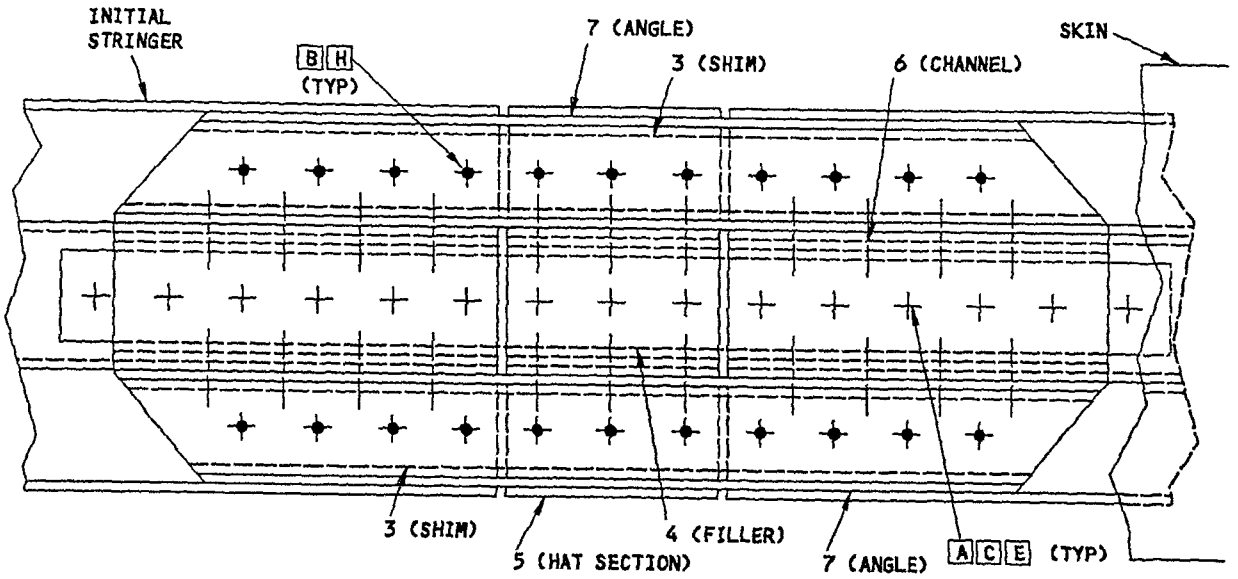

PLAN VIEW

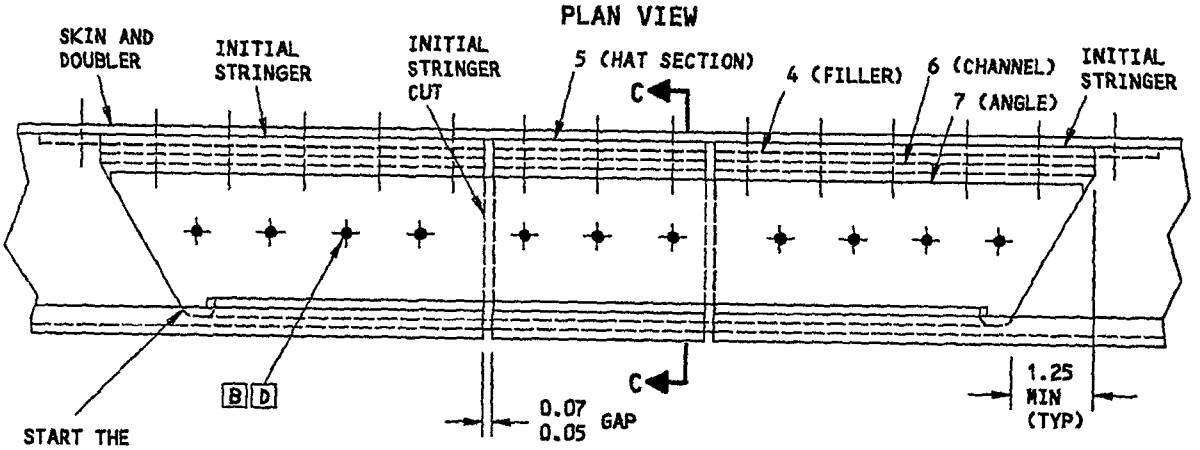

SIDE VIEW

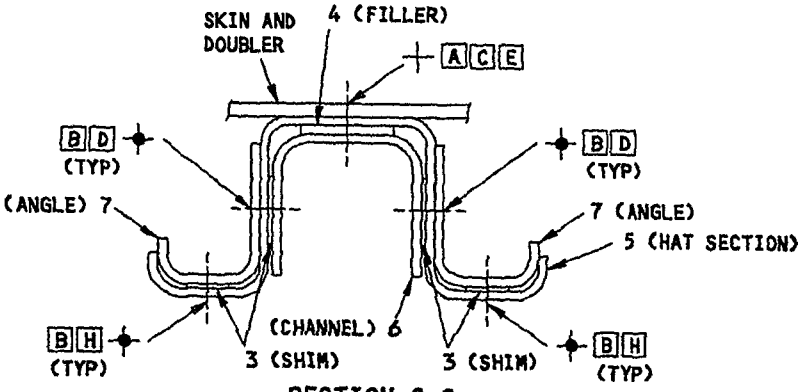

SECTION C-C

INSTALLATION OF REPAIR PARTS 3,4,5,6, AND 7
DETAIL VII

Fuselage Stringer Repair - Stringer 14 to Stringer 28
Figure 1 (Sheet 8)

C30312

APPLICABILITY
THIS REPAIR APPLIES TO DAMAGE TO THE FUSELAGE STRINGERS WHERE THE DAMAGE TO THE STRINGER IS LIMITED TO A LONGITUDINAL CRACK IN ONE OF THE FORMED CORNERS OF THE SECTION.

REPAIR INSTRUCTIONS

1. Find the limits of the damage and remove the skin-to-stringer attach rivets in the damage area.

2. Make a dye penetrant inspection of the crack to find the full extent of the damage.

3. If the crack is less than 0.50 inch in length and not closer than 4.0 inches to a frame attachment, do these steps:

   - Find the ends of the crack and drill 0.19 inch diameter stop holes 0.10 inch ahead of the crack at each end. [H]

   NOTE: Protect the skin when you drill the crack stop holes.

4. If the crack is more than 0.50 inch in length or is closer than 4.0 inches to a frame attachment, make the repair as described in the paragraphs which follow:

   NOTE: A new stringer clip will be necessary if a repair per Detail VI is used at a frame location.

5. Use the dye penetrant inspection method to find the ends of the crack and drill 0.19 inch diameter stop holes 0.10 inch ahead of the crack at each end. [H]

   NOTE: Protect the skin when you drill the crack stop holes.

6. Make the repair parts for the applicable stringer section. Refer to Table I.

7. Assemble the repair parts and drill the fastener holes. Refer to Table III for repair fastener types, sizes and spacing.

8. Disassemble the repair parts.

9. Break all sharp edges of the initial and repair parts 0.15 R to 0.030 R.

10. Remove all nicks, scratches, burrs, sharp edges and corners from the initial and repair parts.

11. Apply the chemical conversion coating to the repair parts and to the cut edges of the initial parts. Refer to 51-10-2.

12. Apply one layer of BMS 10-11, Type I primer to the repair parts and to the cut edges of the initial parts. Refer to 51-21 of the Maintenance Manual.

13. Install the repair parts and make a faying surface seal with BMS 5-95 sealant.

14. Apply the finish as shown in 51-21 of the Maintenance Manual.

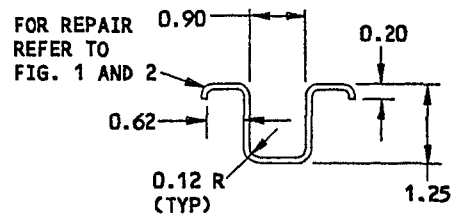

TYPE I

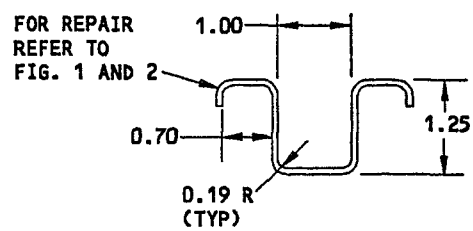

TYPE II

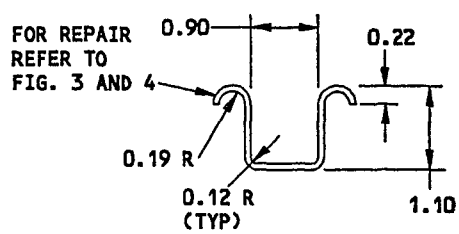

TYPE III (CROWN)

Longitudinally Cracked Stringer - Typical Repair
Figure 2 (Sheet 1)

NOTES

- SEE FIGURES 3 AND 4 FOR THE REPAIR OF STRINGER TYPE III (FUSELAGE CROWN AREA).
- THIS REPAIR WILL NOT HAVE AN EFFECT ON THE STRUCTURALLY SIGNIFICANT ITEMS GIVEN IN SRM 51-00-4, FIGURE 3. THEREFORE, NO CHANGE TO THE SUPPLEMENTAL STRUCTURAL INSPECTION DOCUMENT (SSID) INSPECTION PROGRAM IS NECESSARY.
- ON SOME AIRPLANES CAPPING STRIPS ARE INSTALLED ACROSS THE FLANGES OF THE STRINGER BETWEEN THE FRAMES. THESE CAPPING STRIPS MUST BE KEPT AND INSTALLED AGAIN WHEN A REPAIR IS MADE.
- USE SHIMS AS NECESSARY TO MAKE THE SURFACES FLUSH WHEN YOU REPAIR TAPERED STRINGERS. KEEP GAPS 0.01 INCH OR LESS.
- WHEN YOU USE THIS REPAIR REFER TO:
  - AMM 51-21 FOR INTERIOR AND EXTERIOR FINISHES
  - SOPM 20-20-02 FOR DYE PENETRANT METHODS OF INSPECTION
  - SRM 51-10-2 FOR PROTECTIVE TREATMENT OF METAL
  - SRM 51-10-6 FOR INVESTIGATION AND CLEANUP OF DAMAGE
  - SRM 51-20-4 FOR THE SEALING OF REPAIRS
  - SRM 51-30 FOR FASTENER CODE, REMOVAL, INSTALLATION, HOLE SIZES, EDGE MARGINS AND SUBSTITUTION
  - SRM 51-30-9 FOR COLD WORKING OF HOLES.

[A] USE BACR15CE()D TYPE FASTENERS.

[B] USE MS20470D() TYPE FASTENERS.

[C] USE THE SAME SIZE AND SPACING AS THE INITIAL FASTENERS WHICH ATTACH THE STRINGER TO THE SKIN.

[D] MINIMUM QUANTITY OF FASTENERS NECESSARY IN EACH LONGITUDINAL LINE OF FASTENERS ON EACH SIDE OF THE DAMAGE.

[E] REFER TO 51-30-3 FOR FASTENER SUBSTITUTION. IF THE INITIAL FASTENER HOLE IS DAMAGED, USE 1/32 INCH OVERSIZE FASTENER. REFER TO 51-30-5.

[F] SEE TABLE III FOR THE APPLICABLE REPAIR SECTION PART NUMBER OR DETAIL NUMBER. IF THE REPAIR SECTION IS MADE FROM DETAILS I THROUGH IV, THE THICKNESS MUST BE ONE GAGE THICKER THAN THE ORIGINAL STRINGER. [G] MAKE A REPLACEMENT STRINGER CLIP IF THE PART 2 CHANNEL IS USED WHERE A STRINGER CLIP IS INSTALLED. THE REPLACEMENT CLIP MUST BE:
- THE SAME MATERIAL, CONFIGURATION, AND GAGE AS THE INITIAL CLIP
- EQUAL IN WIDTH TO THE INITIAL CLIP MINUS TWO TIMES THE GAGE OF THE PART 2 CHANNEL.

[G] TO MAKE A FORMED PART, USE A BEND RADIUS THAT WILL ALLOW THE REPAIR PART TO NEST IN THE INITIAL STRINGER. SEE TABLE II FOR THE MINIMUM BEND RADIUS FOR THE 7075-O AND 7075-T6 MATERIALS. IF A REPAIR PART IS MADE FROM 7075-O MATERIAL, THE PART MUST BE HEAT TREATED TO 7075-T6 AFTER FORMING.

[H] DO AN EDDY CURRENT TEST IN THE LOCATION OF THE STOP HOLE TO FIND WHETHER OR NOT THE CRACK CONTINUES PAST THE STOP HOLE. REFER TO THE NONDESTRUCTIVE TEST MANUAL, D6-37239, PART 6.

IF THE CRACK DOES NOT CONTINUE PAST THE STOP HOLE, ENLARGE THE HOLE TO 0.25 INCH DIAMETER TO MAKE SURE THAT ANY FATIGUE DAMAGED MATERIAL HAS BEEN REMOVED.

IF THE CRACK DOES CONTINUE PAST THE STOP HOLE, ENLARGE THE HOLE DIAMETER BY 1/16 INCH BEFORE EACH EDDY CURRENT TEST. WHEN NO CRACK DAMAGE CAN BE FOUND, ENLARGE THE STOP HOLE DIAMETER AN ADDITIONAL 1/16 INCH TO MAKE SURE THAT ALL FATIGUE DAMAGED MATERIAL HAS BEEN REMOVED. THE MAXIMUM DIAMETER OF THE STOP HOLE IS 0.3125 INCH.

[I] LOCATE THE FASTENERS MID-WAY BETWEEN THE SKIN-TO-STRINGER FASTENERS.

[J] USE THE SAME SPACING AS THE SKIN-TO-STRINGER FASTENERS.

[K] NEW FASTENERS CLOSEST TO THE STOP HOLE ARE TO BE STAGGERED IN RELATION TO THE INITIAL FASTENERS AND THE STOP HOLE.

[L] MAKE THIS PART AS NECESSARY. THIS PART MUST BE LONGER THAN THE PART 1 ANGLE OR PART 2 CHANNEL BY ONE FASTENER INSTALLED AT EACH END. ADJUST THE GAGE OF THIS PART AS NECESSARY.

[M] THE OUTER RADII OF THIS PART IS SMALLER THAN THE INNER RADII OF THE INITIAL SECTION. USE THE PART 3 FILLER WITH THE PART 2 CHANNEL IN THE REPAIR SHOWN IN DETAIL VI.

Longitudinally Cracked Stringer - Typical Repair
Figure 2 (Sheet 2)

BOEING PROPRIETARY - Copyright © - Unpublished Work - See title page for details.

SYMBOLS

INITIAL FASTENER LOCATION

REPAIR FASTENER LOCATION

REPAIR MATERIAL			
PART		QTY	MATERIAL
1	ANGLE F	1	CLAD 7075-T6
2	CHANNEL F	1	CLAD 7075-T6
3	FILLER L	1	CLAD 7075-T6
4	SHIM		CLAD 7075-T6 USE WHERE NECESSARY - GAGE TO SUIT

TABLE I

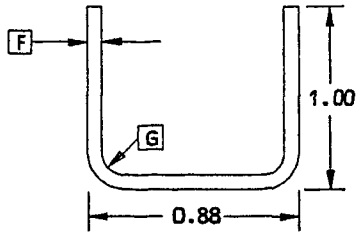

CHANNEL
DETAIL I

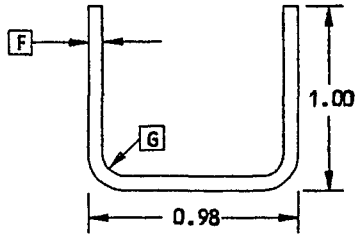

CHANNEL
DETAIL II

GAGE	ALLOY	
	7075-O	7075-T6
0.028	0.06	0.14
0.032	0.06	0.16
0.036	0.06	0.19
0.040	0.06	0.19
0.045	0.09	0.25
0.050	0.09	0.25
0.056	0.12	0.28
0.063	0.12	0.31
0.071	0.12	0.38
0.080	0.19	0.44
0.090	0.19	0.50

MINIMUM STANDARD INSIDE BEND RADII
ROOM TEMPERATURE FORMING
TABLE II

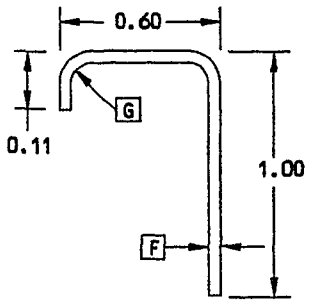

ANGLE
DETAIL III

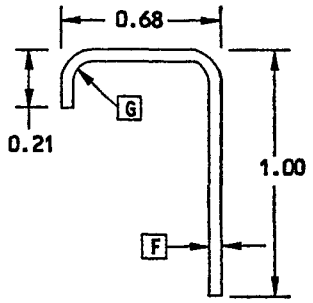

ANGLE
DETAIL IV

Longitudinally Cracked Stringer - Typical Repair
Figure 2 (Sheet 3)

STRINGER REPAIR SECTIONS AND FASTENERS [E]							
INITIAL STRINGER		REPAIR SECTION		FASTENER [A]		FASTENER [B]	
INITIAL SECTION	GAGE			TYPE [C]	MIN QTY [D]	TYPE [I] AND [J]	MIN QTY [D]
BAC1498-107	0.040	BAC1493-521	BAC1493-520	BACR15CE()D	4	MS20470D5	4
BAC1498-108	0.032	BAC1493-513	BAC1493-479 [M]				
BAC1498-138	0.032	BAC1493-547 [M]	BAC1493-204 [M] OR BAC1493-412				
BAC1498-139	0.036	BAC1493-547 [M]	BAC1493-204 [M] OR BAC1493-412				
TYPE II	0.036	BAC1493-547 [M]	BAC1493-204 [M] OR BAC1493-412				
BAC1498-141	0.045	BAC1493-547 [M]	BAC1493-209		5		5
TYPE II	0.045	BAC1493-547 [M]	BAC1493-209		5		5
BAC1498-155	0.028	SEE DETAIL III	SEE DETAIL I		4		4
TYPE I	0.028	SEE DETAIL III	SEE DETAIL I				
BAC1498-156	0.032	BAC1493-659 [M]	BAC1493-249				
TYPE I	0.032	BAC1493-659 [M]	BAC1493-249				
BAC1498-157	0.036	BAC1493-659 [M]	BAC1493-249				
TYPE I	0.036	BAC1493-659 [M]	BAC1493-249				
BAC1498-158	0.040	BAC1493-574	BAC1493-249				
TYPE I	0.040	BAC1493-574	BAC1493-249				
BAC1498-159	0.045	SEE DETAIL III	SEE DETAIL I		5		5
TYPE I	0.045	SEE DETAIL III	SEE DETAIL I				
BAC1498-160	0.050	SEE DETAIL III	SEE DETAIL I				
TYPE I	0.050	BAC1493-574	SEE DETAIL I				
BAC1498-161	0.056	SEE DETAIL III	SEE DETAIL I			MS20470D6	
TYPE I	0.056	BAC1493-574	SEE DETAIL I			MS20470D6	

TABLE III

Longitudinally Cracked Stringer - Typical Repair
Figure 2 (Sheet 4)

C30319

STRINGER REPAIR SECTIONS AND FASTENERS [E]							
INITIAL STRINGER		REPAIR SECTION		FASTENER [A]		FASTENER [B]	
INITIAL SECTION	GAGE			TYPE [C]	MIN QTY [D]	TYPE [I] AND [J]	MIN QTY [D]
BAC1498-162	0.063	SEE DETAIL III	SEE DETAIL I	BACR15CE( )D	5	MS20470D6	5
TYPE I	0.063	SEE DETAIL III	SEE DETAIL I				
BAC1498-163	0.071	SEE DETAIL III	SEE DETAIL I				
TYPE I	0.071	SEE DETAIL III	SEE DETAIL I				
BAC1498-145	0.071	SEE DETAIL IV	SEE DETAIL II				
TYPE II	0.071	SEE DETAIL IV	SEE DETAIL II				
BAC1498-146	0.080	SEE DETAIL IV	SEE DETAIL II		6		6
TYPE II	0.080	SEE DETAIL IV	SEE DETAIL II				
BAC1498-147	0.090	SEE DETAIL IV	SEE DETAIL II				
TYPE II	0.090	SEE DETAIL IV	SEE DETAIL II				

TABLE III (CONTINUED)

Longitudinally Cracked Stringer - Typical Repair
Figure 2 (Sheet 5)

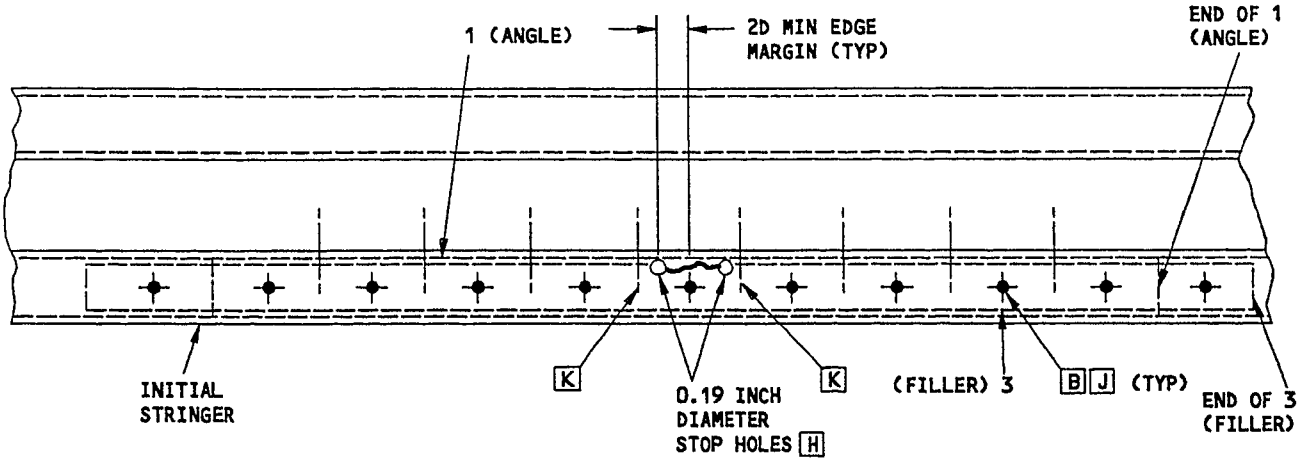

PLAN VIEW

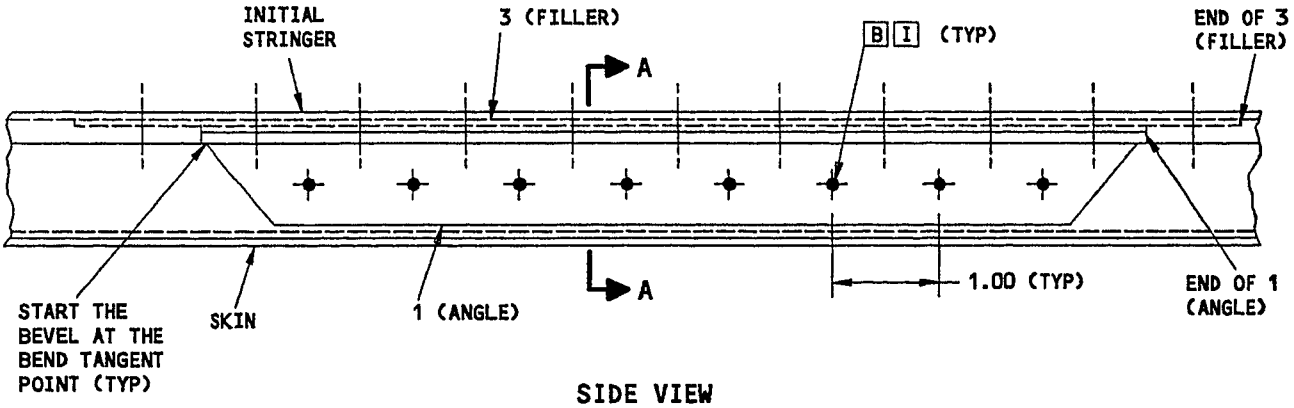

SIDE VIEW

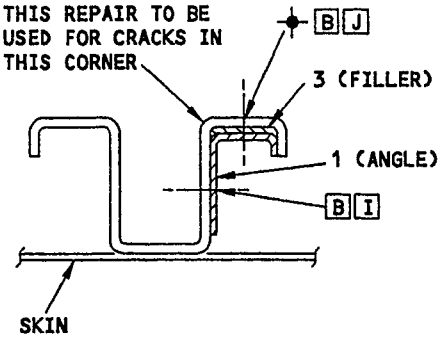

SECTION A-A

INSTALLATION OF REPAIR PARTS 1 AND 3
DETAIL V

Longitudinally Cracked Stringer - Typical Repair
Figure 2 (Sheet 6)

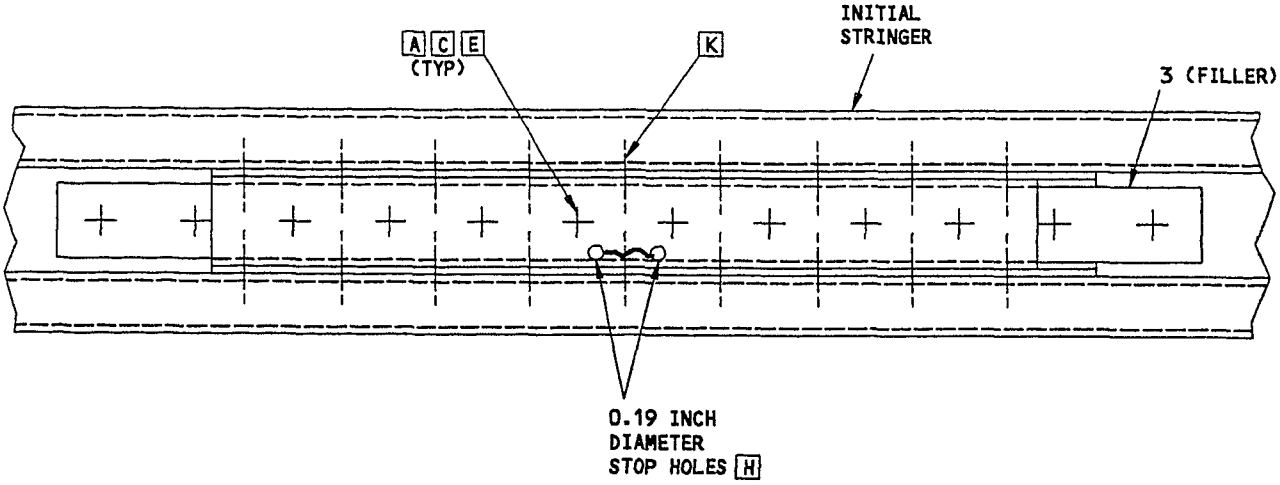

PLAN VIEW

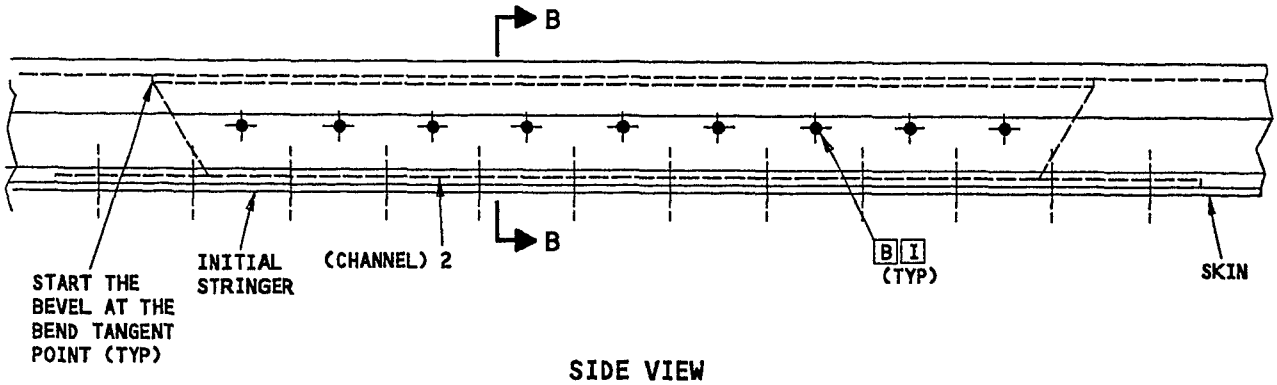

SIDE VIEW

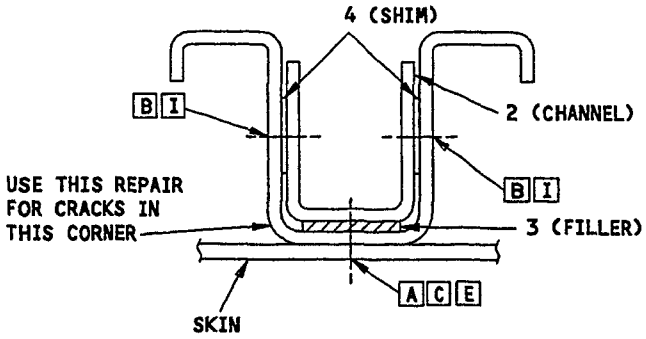

SECTION B-B

INSTALLATION OF REPAIR PARTS 2 AND 3
DETAIL VI

Longitudinally Cracked Stringer - Typical Repair
Figure 2 (Sheet 7)

APPLICABILITY
THIS REPAIR APPLIES TO DAMAGE TO THE TYPE III STRINGERS IN THE FUSELAGE CROWN AREA.

REPAIR INSTRUCTIONS

1. Find the limits of the damage and remove the skin-to-stringer attach rivets in the damage area.
2. Cut out the damaged part of the stringer. Be careful not to damage the skin. Refer to SRM 53-30-3 if you damage the skin.
3. Make the repair parts. Refer to Table I.
4. Assemble the repair parts and drill the fastener holes. Refer to Table II for repair fastener types and spacing.
5. Disassemble the repair parts.
6. Break all sharp edges of the initial and repair parts 0.015 R to 0.030 R.
7. Remove all of the nicks, scratches, burrs, sharp edges and corners from the initial and repair parts.
8. Apply the chemical conversion coating to the repair parts and to the cut edges of of the initial parts. Refer to SRM 51-10-2.
9. Apply one layer of BMS 10-11, Type I primer to the repair parts and to the cut edges of the initial parts. Refer to AMM 51-21.
10. Install the repair parts and make a faying surface seal with BMS 5-95 sealant.
11. Apply the finish as shown in AMM 51-21.

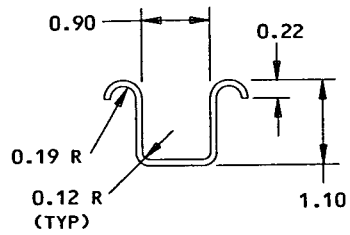

TYPE III STRINGER
(FUSELAGE CROWN AREA)

NOTES

- SEE FIG. 4 FOR DAMAGE TO A STRINGER WHICH IS LIMITED TO A LONGITUDINAL CRACK IN ONE OF THE FORMED CORNERS OF THE SECTIONS OTHER THAN THE FLANGES.
- CROWN STRINGERS ARE LOCATED IN THAT PART OF THE FUSELAGE ABOVE THE WINDOWS AND BETWEEN STRINGERS S-10L AND S-10R FROM BS 260 TO BS 1016. TYPE III STRINGERS ARE LOCATED ONLY IN THE CROWN AREA BUT ARE NOT THE ONLY TYPE OF STRINGERS FOUND IN THIS AREA.
- REFER TO FIG. I FOR REPAIRS TO OTHER TYPES OF THE STRINGERS.
- THIS REPAIR WILL HAVE AN EFFECT ON THE STRUCTURALLY SIGNIFICANT ITEM (SSI) NUMBER F-39 WHEN INSTALLED IN THE CROWN AREA. HOWEVER, THE EXTERNAL INSPECTION ALTERNATIVES FOR F-39A THRU H ARE STILL APPLICABLE WITH THIS REPAIR INSTALLED. DO THE INSPECTIONS FOR F-39A THRU H, IF NECESSARY, AT THE SUBSEQUENT SUPPLEMENTAL STRUCTURAL INSPECTION DOCUMENT (SSID) INSPECTION ON THIS AIRPLANE. REFER TO SRM 51-00-4, FIG. 3 FOR THE APPLICABLE SSI DATA.
- USE SHIMS AS NECESSARY TO MAKE THE SURFACES FLUSH WHEN YOU REPAIR TAPERED STRINGERS.
- WHEN YOU USE THIS REPAIR REFER TO:
  - AMM 51-21 FOR INTERIOR AND EXTERIOR FINISHES
  - SRM 51-10-2 FOR PROTECTIVE TREATMENT OF METAL
  - SRM 51-10-6 FOR INVESTIGATION AND CLEANUP OF DAMAGE
  - SRM 51-20-4 FOR THE SEALING OF REPAIRS
  - SRM 51-30 FOR FASTENER CODE, REMOVAL, INSTALLATION, HOLE SIZES, EDGE MARGINS AND SUBSTITUTION.

Fuselage Crown Stringer Repair (Type III Stringers)
Figure 3 (Sheet 1)

BOEING PROPRIETARY - Copyright © - Unpublished Work - See title page for details.

NOTES (CONT)

[A] USE BACR15CE()D TYPE FASTENERS.

[B] USE MS20470D() TYPE FASTENERS.

[C] USE THE SAME SIZE AND SPACING AS THE INITIAL FASTENERS WHICH ATTACH THE STRINGER TO THE SKIN.

[D] LOCATE THE FASTENERS MID-WAY BETWEEN THE FASTENERS IN THE SKIN.

[E] REFER TO 51-30-3 FOR FASTENER SUBSTITUTION. IF THE INITIAL FASTENER HOLE IS DAMAGED, USE 1/32 INCH OVERSIZE FASTENER. REFER TO 51-30-5.

[F] MINIMUM QUANTITY OF FASTENERS NECESSARY IN EACH LONGITUDINAL LINE OF FASTENERS ON EACH SIDE OF THE DAMAGE.

[G] TO MAKE A FORMED PART, USE A BEND RADIUS THAT WILL ALLOW THE REPAIR PART TO NEST IN THE INITIAL STRINGER. SEE TABLE III FOR THE MINIMUM BEND RADIUS FOR THE 7075-O AND 7075-T6 MATERIALS. IF A REPAIR PART IS MADE FROM 7075-O MATERIAL, THE PART MUST BE HEAT TREATED TO 7075-T6 AFTER FORMING.

[H] FOR THICKNESS EQUAL TO OR LESS THAN 0.045 INCH.

[I] FOR THICKNESS GREATER THAN 0.045 INCH.

SYMBOLS

+ INITIAL FASTENER LOCATION

⊕ REPAIR FASTENER LOCATION

REPAIR MATERIAL			
PART		QTY	MATERIAL
1	ZEE [G]	1	CLAD 7075-T6 ONE GAGE THICKER THAN STRINGER
2	ZEE [G]	1	CLAD 7075-T6 ONE GAGE THICKER THAN STRINGER
3	FILLER	1	CLAD 7075-T6 SAME GAGE AS STRINGER

TABLE I

Fuselage Crown Stringer Repair (Type III Stringers)
Figure 3 (Sheet 2)

REPAIR FASTENERS [E]						
INITIAL STRINGER	FASTENER [A]			FASTENER [B]		
	TYPE	QTY [F]	SPACING	TYPE	QTY [F]	SPACING
BAC1498-150	BACR15CE5D	8	[C]	MS20470D5	6	[D]
BAC1498-151	BACR15CE5D	8	[C]	MS20470D5	6	[D]
BAC1498-152	BACR15CE5D	8	[C]	MS20470D5	6	[D]
BAC1498-153	BACR15CE5D	8	[C]	MS20470D5	6	[D]
BAC1498-154	BACR15CE5D	8	[C]	MS20470D5	6	[D]
BAC1498-164	BACR15CE5D	8	[C]	MS20470D6	6	[D]
BAC1498-167	BACR15CE5D	10	[C]	MS20470D6	8	[D]

TABLE II

GAGE	ALLOY	
	7075-0	7075-T6
0.028	0.06	0.14
0.032	0.06	0.16
0.036	0.06	0.19
0.040	0.06	0.19
0.045	0.09	0.25
0.050	0.09	0.25
0.056	0.12	0.28
0.063	0.12	0.31
0.071	0.12	0.38
0.080	0.19	0.44
0.090	0.19	0.50

MINIMUM STANDARD INSIDE BEND RADII
ROOM TEMPERATURE FORMING
TABLE III

Fuselage Crown Stringer Repair (Type III Stringers)
Figure 3 (Sheet 3)

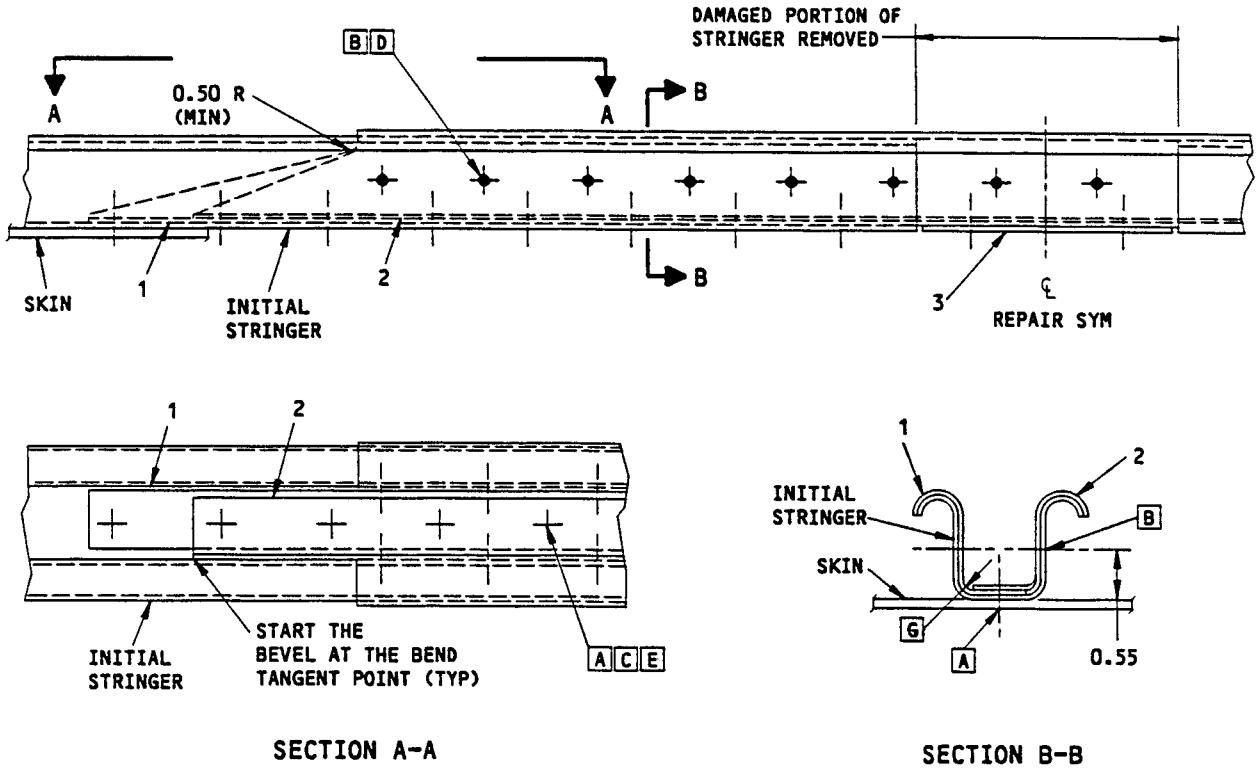

SECTION A-A

SECTION B-B

DETAIL I

Fuselage Crown Stringer Repair (Type III Stringers)
Figure 3 (Sheet 4)

APPLICABILITY

THIS REPAIR APPLIES TO DAMAGE TO THE FUSELAGE TYPE III STRINGERS WHERE THE DAMAGE TO THE STRINGER IS LIMITED TO A LONGITUDINAL CRACK IN ONE OF THE FORMED CORNERS OF THE SECTIONS OTHER THAN THE FLANGES.

REPAIR INSTRUCTIONS

1. Find the limits of the damage and remove the skin-to-stringer attach rivets in the damage area.
2. Make a dye penetrant inspection of the crack to find the full extent of the damage.
3. Find the ends of the crack and drill 0.19 inch diameter stop holes 0.10 inch ahead of the crack at each end. [I]

   NOTE: Protect the skin when you drill the crack stop holes.
4. Make the repair parts for the applicable stringer section. Refer to Table I.
5. Assemble the repair parts and drill the fastener holes. Refer to Table II for repair fastener types, sizes and spacing.
6. Disassemble the repair parts.
7. Break all sharp edges of the initial and repair parts 0.015 R to 0.030 R.
8. Remove all of the nicks, scratches, burrs, sharp edges, and corners from the initial and repair parts.
9. Apply the chemical conversion coating to the repair parts and to the cut edges of the initial parts. Refer to SRM 51-10-2.
10. Apply one layer of BMS 10-11, Type I primer to the repair parts and to the cut edges of the initial parts. Refer to AMM 51-21.
11. Install the repair parts and make a faying surface seal with BMS 5-95 sealant.
12. Apply the finish as shown in AMM 51-21.

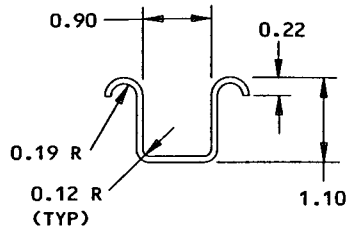

TYPE III STRINGER
(FUSELAGE CROWN AREA)

NOTES

- CROWN STRINGERS ARE LOCATED IN THAT PART OF THE FUSELAGE BETWEEN STRINGERS S-10 AND S-10R FROM BS 260 TO BS 1016. TYPE III STRINGERS ARE LOCATED ONLY IN THE FUSELAGE CROWN AREA BUT ARE NOT THE ONLY TYPE OF STRINGERS FOUND IN THIS AREA.
- REFER TO FIG. 2 FOR CRACK REPAIRS OF OTHER TYPES OF STRINGERS.
- THIS REPAIR WILL HAVE AN EFFECT ON THE STRUCTURALLY SIGNIFICANT ITEM (SSI) NUMBER F-39 WHEN INSTALLED IN THE CROWN AREA. HOWEVER, THE EXTERNAL INSPECTION ALTERNATIVES FOR F-39A THRU H ARE STILL APPLICABLE WITH THIS REPAIR INSTALLED. DO THE INSPECTIONS FOR F-39A THRU H, IF NECESSARY, AT THE SUBSEQUENT SUPPLEMENTAL STRUCTURAL INSPECTION DOCUMENT (SSID) INSPECTION ON THIS AIRPLANE. REFER TO SRM 51-00-4, FIG. 3 FOR THE APPLICABLE SSI DATA.
- USE SHIMS AS NECESSARY TO MAKE THE SURFACES FLUSH WHEN YOU REPAIR TAPERED STRINGERS.
- WHEN YOU USE THIS REPAIR REFER TO:
  - AMM 51-21 FOR INTERIOR AND EXTERIOR FINISHES
  - SOPM 20-20-02 FOR DYE PENETRANT METHODS OF INSPECTION
  - SRM 51-10-2 FOR PROTECTIVE TREATMENT OF METAL
  - SRM 51-10-6 FOR INVESTIGATION AND CLEANUP OF DAMAGE
  - SRM 51-20-4 FOR THE SEALING OF REPAIRS
  - SRM 51-30 FOR FASTENER CODE, REMOVAL, INSTALLATION, HOLE SIZES, EDGE MARGINS AND SUBSTITUTION
  - SRM 51-30-9 FOR COLD WORKING OF HOLES.

[A] USE BACR15CE()D TYPE FASTENERS. A MINIMUM OF 5 FASTENERS ON EACH SIDE OF THE DAMAGE IS NECESSARY.

[B] USE MS20470D() TYPE FASTENERS. A MINIMUM OF 3 FASTENERS IN EACH LONGITUDINAL LINE OF FASTENERS ON EACH SIDE OF THE DAMAGE IS NECESSARY.

Longitudinally Cracked Crown Stringer - Typical Repair
Figure 4 (Sheet 1)

BOEING PROPRIETARY - Copyright © - Unpublished Work - See title page for details.

NOTES (CONT)

[C] USE THE SAME SIZE AND SPACING AS THE INITIAL FASTENERS WHICH ATTACH THE STRINGER TO THE SKIN.

[D] USE THE SAME GAGE AS THE INITIAL STRINGER. FOR TAPERED STRINGERS, USE THE SAME GAGE CHANNEL AS THE GAGE OF THE THICKEST STRINGER AT THE CRACK LOCATION.

[E] REFER TO 51-30-3 FOR FASTENER SUBSTITUTION. IF THE INITIAL FASTENER HOLE IS DAMAGED, USE 1/32 INCH OVERSIZE FASTENER. REFER TO 51-30-5.

[F] FOR THICKNESS EQUAL TO OR LESS THAN 0.045 INCH.

[G] FOR THICKNESS GREATER THAN 0.045 INCH.

[H] TO MAKE A FORMED PART, USE A BEND RADIUS THAT WILL ALLOW THE REPAIR PART TO NEST IN THE INITIAL STRINGER. SEE TABLE III FOR THE MINIMUM BEND RADIUS FOR THE 7075-O AND 7075-T6 MATERIALS. IF A REPAIR PART IS MADE FROM 7075-O MATERIAL, THE PART MUST BE HEAT TREATED TO 7075-T6 AFTER FORMING.

[I] DO AN EDDY CURRENT TEST IN THE LOCATION OF THE STOP HOLE TO FIND WHETHER OR NOT THE CRACK CONTINUES PAST THE STOP HOLE. REFER TO THE NONDESTRUCTIVE TEST MANUAL, D6-37239, PART 6.

IF THE CRACK DOES NOT CONTINUE PAST THE STOP HOLE, ENLARGE THE HOLE TO 0.25 INCH DIAMETER TO MAKE SURE THAT ANY FATIGUE DAMAGED MATERIAL HAS BEEN REMOVED.

IF THE CRACK DOES CONTINUE PAST THE STOP HOLE, ENLARGE THE HOLE DIAMETER BY 1/16 INCH BEFORE EACH EDDY CURRENT TEST. WHEN NO CRACK DAMAGE CAN BE FOUND, ENLARGE THE STOP HOLE DIAMETER AN ADDITIONAL 1/16 INCH TO MAKE SURE THAT ALL FATIGUE DAMAGED MATERIAL HAS BEEN REMOVED. THE MAXIMUM DIAMETER OF THE STOP HOLE, WHICH INCLUDES THE 1/16 INCH DIAMETER ENLARGEMENT, IS 0.3125 INCH.

[J] LOCATE THE FASTENERS MID-WAY BETWEEN THE SKIN-TO-STRINGER FASTENERS.

[K] NEW FASTENERS CLOSEST TO THE STOP HOLE ARE TO BE STAGGERED IN RELATION TO THE INITIAL FASTENERS AND THE STOP HOLE.

SYMBOLS

+ INITIAL FASTENER LOCATION

-◆- REPAIR FASTENER LOCATION

REPAIR MATERIAL			
PART		QTY	MATERIAL
1	CHANNEL [H]	1	CLAD 7075-T6 [D]

TABLE I

REPAIR FASTENERS [E]			
INITIAL STRINGER SECTION		FASTENER [A]	FASTENER [B][J]
BAC1498-150		BACR15CE( )D [C]	MS10470D5
BAC1498-151		BACR15CE( )D [C]	MS10470D5
BAC1498-152		BACR15CE( )D [C]	MS10470D5
BAC1498-153		BACR15CE( )D [C]	MS10470D5
BAC1498-154		BACR15CE( )D [C]	MS10470D5
BAC1498-164		BACR15CE( )D [C]	MS10470D6
BAC1498-167		BACR15CE( )D [C]	MS10470D6
TAPERED STRINGER GAGE	[F]	BACR15CE( )D [C]	MS10470D5
	[G]	BACR15CE( )D [C]	MS10470D6

TABLE II

GAGE	ALLOY	
	7075-O	7075-T6
0.028	0.06	0.14
0.032	0.06	0.16
0.036	0.06	0.19
0.040	0.06	0.19
0.045	0.09	0.25
0.050	0.09	0.25
0.056	0.12	0.28
0.063	0.12	0.31
0.071	0.12	0.38
0.080	0.19	0.44
0.090	0.19	0.50

MINIMUM STANDARD INSIDE BEND RADII
ROOM TEMPERATURE FORMING
TABLE III

Longitudinally Cracked Crown Stringer - Typical Repair
Figure 4 (Sheet 2)

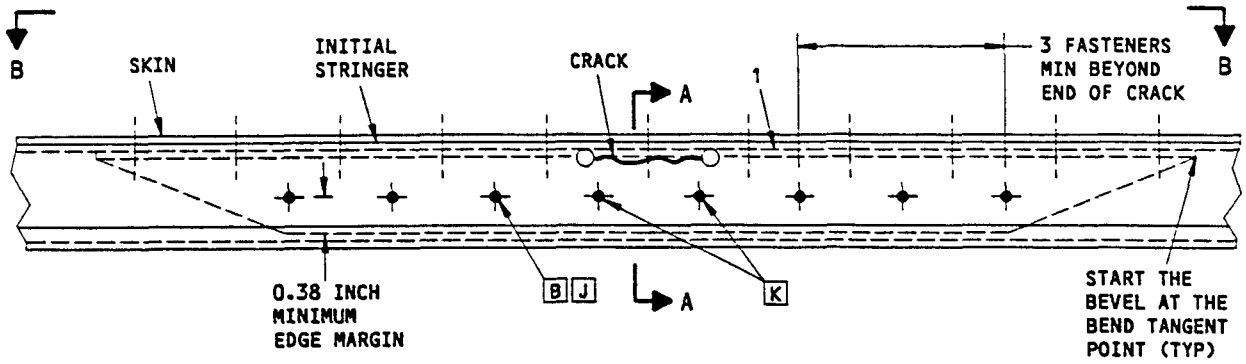

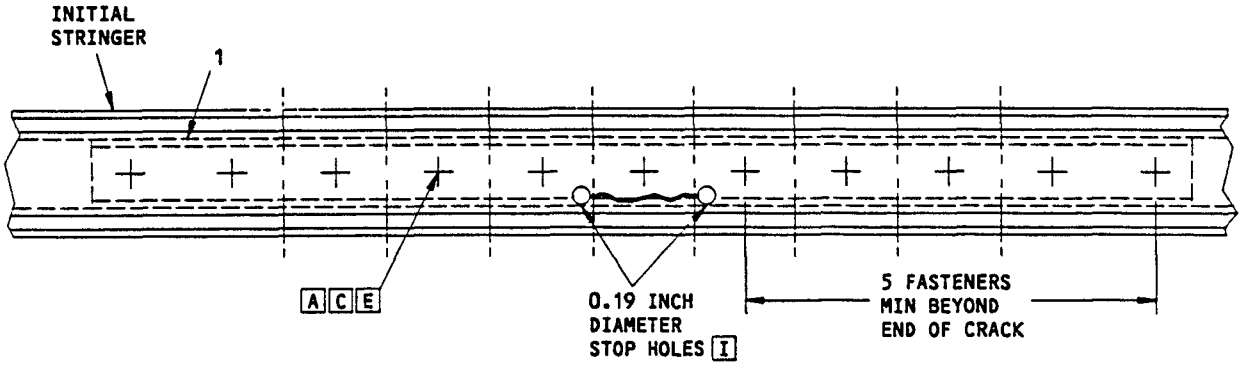

SECTION B-B

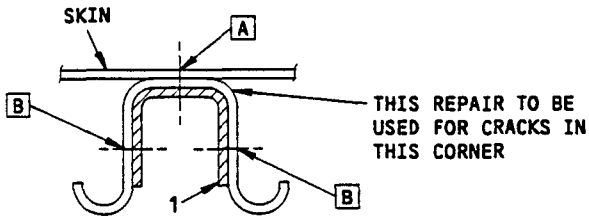

SECTION A-A

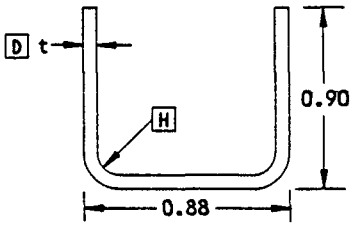

SECTION THRU REPAIR CHANNEL

DETAIL I

Longitudinally Cracked Crown Stringer - Typical Repair
Figure 4 (Sheet 3)

REPAIR INSTRUCTIONS

1. Remove the fasteners in the repair area. Move the skin and doubler away from stringer S-7.
2. Put a stainless steel sheet of metal that is approximately 0.032 inch thick between stringer S-7 and the skin. This sheet gives protection when you drill the stop holes or cut out the damaged part of the chord.
3. Drill 0.25 inch diameter stop holes at each end of the crack. Refer to 51-10-1.
4. Make the repair part. See Table I. See Detail II for a repair at BS 291.5. See Detail III for a repair at BS 332.1.
5. Put the repair part in position on the external body skin and drill the fastener holes.
6. Remove the repair part.
7. Remove the nicks, scratches, gouges, burrs and sharp edges from the repair parts and the initial parts.
8. Apply a chemical conversion coating to the repair part and to the bare surfaces of the initial parts. Refer to SRM 51-10-2.
9. Apply one layer of BMS 10-11, Type I primer to the repair part and to the bare surfaces of the initial parts. Refer to SOPM 20-41-02.
10. Install the repair part with BMS 5-95 sealant between the mating surfaces. Refer to SRM 51-20-4.
11. Install the fasteners. Fasteners that are not made of aluminum must be installed wet with BMS 5-95 sealant.
12. Apply one layer of BMS 10-11, Type II enamel to the repair area. Refer to SOPM 20-41-02.

NOTES

- THIS REPAIR IS CATEGORY A. THE INSPECTIONS GIVEN IN THE BASELINE ZONAL INSPECTION (BZI) ARE SUFFICIENT TO MAINTAIN THE DAMAGE TOLERANCE OF THE INITIAL STRUCTURE WITH THIS REPAIR INSTALLED. REFER TO 51-00-6 FOR REPAIR CATEGORIES, BZI DEFINITION AND REPAIR ASSESSMENT INFORMATION.
- THIS REPAIR WILL HAVE AN EFFECT ON THE STRUCTURAL SIGNIFICANT ITEM (SSID) NUMBER F-15A AND B WHEN INSTALLED AT THE FORWARD GALLEY DOOR, BUT THE INTERNAL INSPECTION ALTERNATIVES FOR F-15B ARE STILL APPLICABLE. HOWEVER, A NEW INSPECTION METHOD IS NECESSARY FOR THE EXTERNAL INSPECTIONS OF F-15A FOR THIS REPAIR. SEE TABLE II FOR NEW INSPECTION REQUIREMENTS OF F-15A. DO THE INTERNAL INSPECTIONS FOR F-15B, IF NECESSARY, AT THE SUBSEQUENT SUPPLEMENTAL STRUCTURAL INSPECTION DOCUMENT (SSID) INSPECTION ON THIS AIRPLANE. REFER TO SRM 51-00-4, FIG. 3 FOR THE APPLICABLE SSI DATA.
- ALL DIMENSIONS ARE IN INCHES UNLESS GIVEN DIFFERENTLY.
- WHEN YOU DO THIS REPAIR REFER TO:
  - SOPM 20-41-02 FOR APPLICATION OF CHEMICAL AND SOLVENT RESISTANT FINISHES
  - SRM 51-10-1 FOR DAMAGE CLASSIFICATION
  - SRM 51-10-2 FOR PROTECTIVE TREATMENT OF METAL REPAIR PARTS
  - SRM 51-10-6 FOR CADMIUM PLATING
  - SRM 51-20-4 FOR REPAIR SEALING
  - SRM 51-30 FOR FASTENER CODE, REMOVAL AND INSTALLATION, HOLE SIZES AND EDGE MARGINS
  - SRM 51-70 FOR AERODYNAMIC SMOOTHNESS.

[A] CUT OUT THE DAMAGED PART OF THE STRINGER IF:
- THERE IS NOT SUFFICIENT EDGE MARGIN FOR A STOP HOLE OR,
- THE CRACK ENDS OF THE FORWARD EDGE OF THE STRINGER AND YOU CANNOT DRILL A STOP HOLE.

[B] IF THE AIRPLANE IS ABOVE THE INSPECTION THRESHOLD, DO THE NEW INSPECTION METHOD AT THE SUBSEQUENT, SCHEDULED SSID INSPECTION FOR F-15A ON THIS AIRPLANE.

FASTENER SYMBOLS

REFERENCE FASTENER LOCATION

INITIAL FASTENER LOCATION. INSTALL A BACB30FQ6A HEX DRIVE BOLT WITH A BACC30M COLLAR.

REPAIR FASTENER LOCATION. INSTALL A BACB30FN6A HEX DRIVE BOLT

REPAIR MATERIAL			
PART		QTY	MATERIAL
1	DOUBLER	1	0.080 2024-T3
2	DOUBLER	1	0.080 2024-T3

TABLE I

Fuselage Stringer S-7 Crack Repairs
Figure 5 (Sheet 1)

BOEING PROPRIETARY - Copyright © - Unpublished Work - See title page for details.

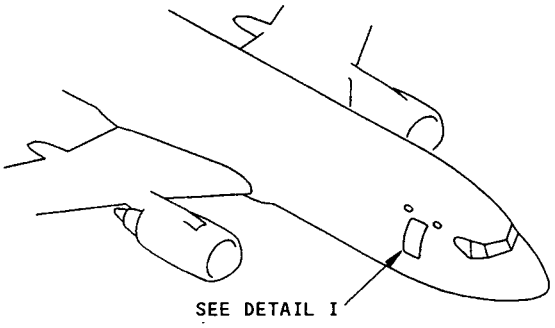

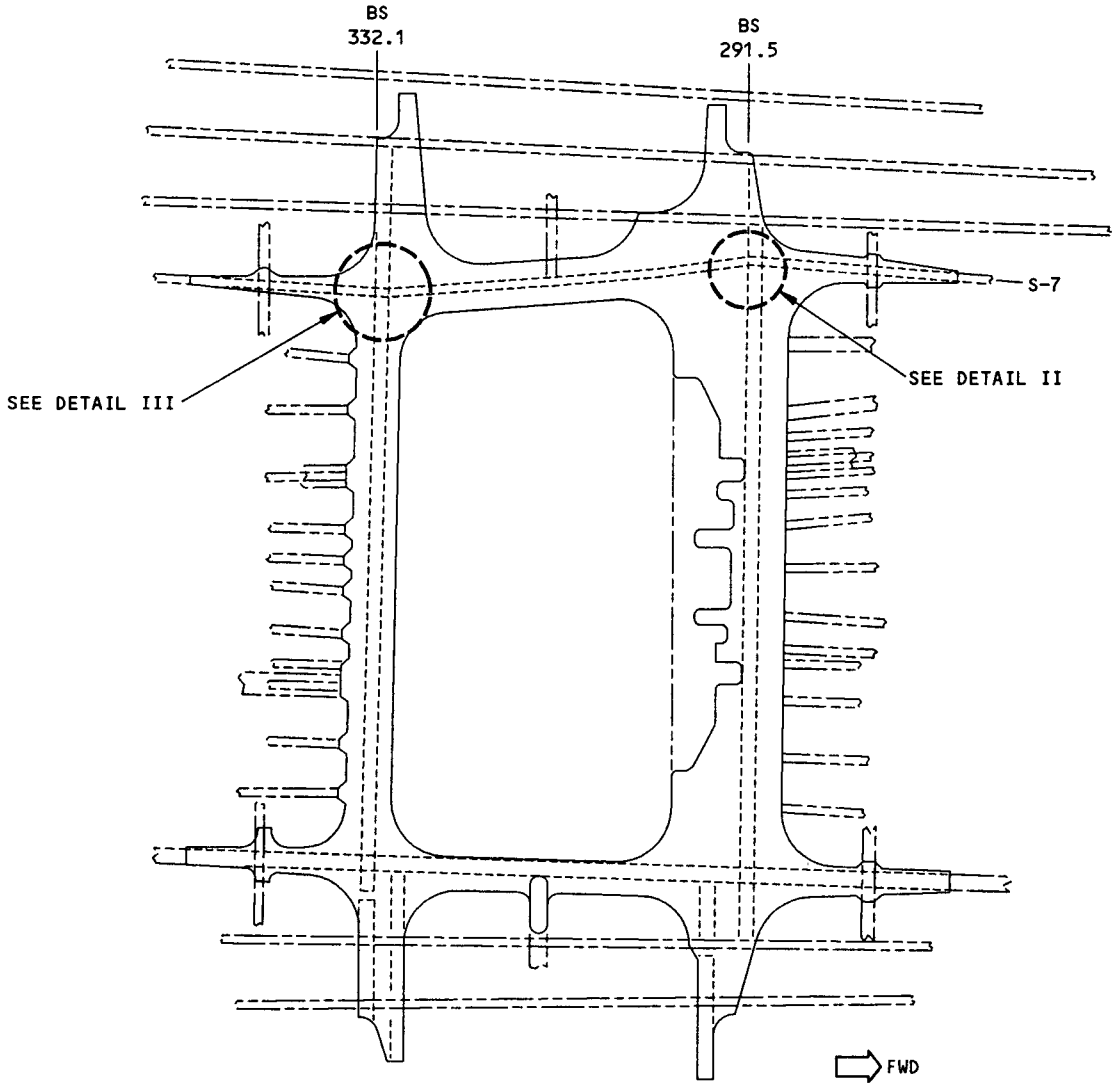

FUSELAGE EXTERIOR SKIN IS NOT SHOWN
DETAIL I

Fuselage Stringer S-7 Crack Repairs
Figure 5 (Sheet 2)

BOEING PROPRIETARY - Copyright © - Unpublished Work - See title page for details.

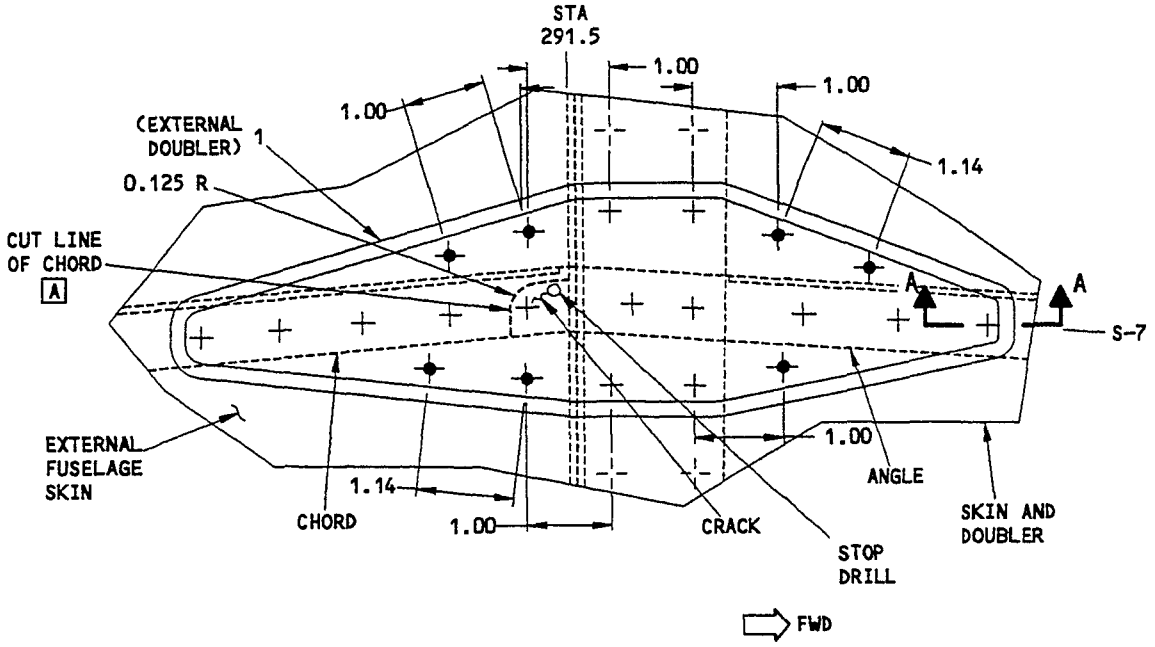

DETAIL I

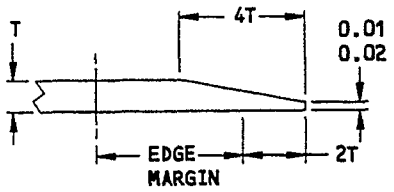

SECTION A-A

Fuselage Stringer S-7 Crack Repairs
Figure 5 (Sheet 3)

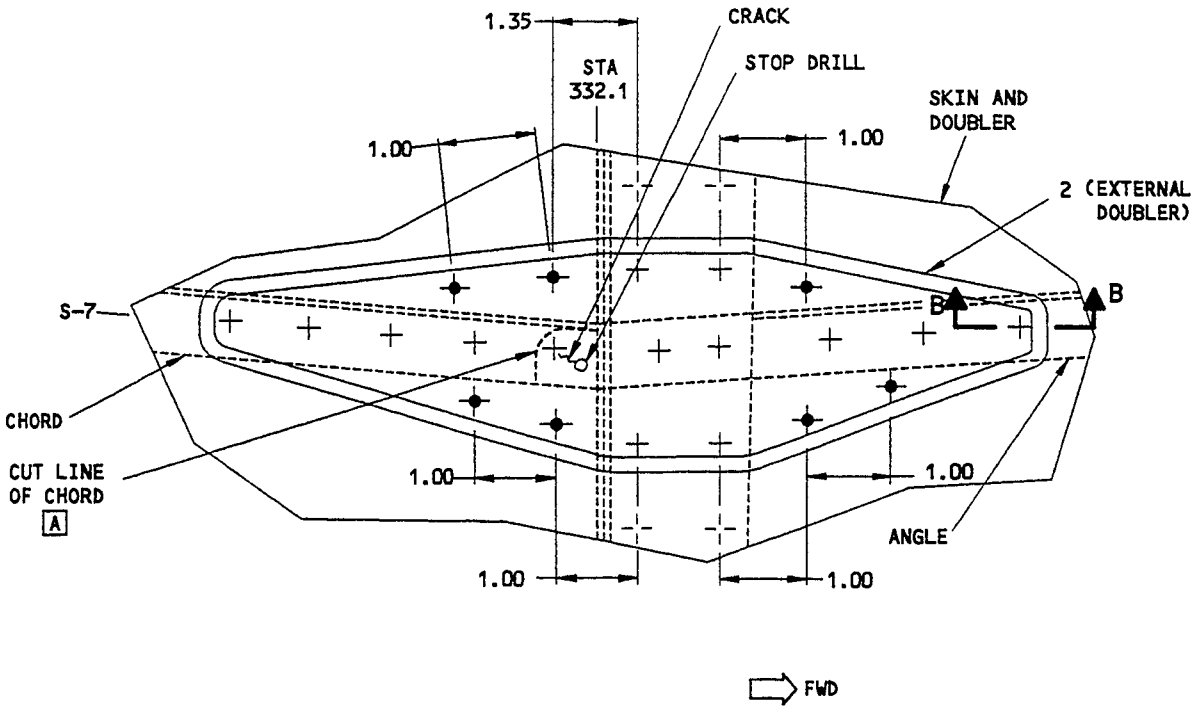

DETAIL II

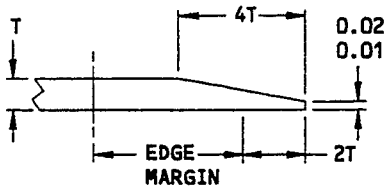

SECTION B-B

Fuselage Stringer S-7 Crack Repairs
Figure 5 (Sheet 4)

E35886

SSID NUMBER F-15A INSPECTION REQUIREMENTS			
INSPECTION THRESHOLD	REPEAT INSPECTION		
	METHOD	INTERVAL	REFERENCE
66,000 CYCLES AFTER AIRPLANE DELIVERY [B]	HIGH FREQUENCY EDDY CURRENT (HFEC)	24,000 CYCLES	737 NDT, D6-37239, PART 6, 51-00-00, FIG. 4 OR 23
	GENERAL VISUAL (SURVEILLANCE) INSPECTION	4,000 CYCLES	
NOTE: Inspect the bearstrap with the HFEC method in the repair area and the initial skin with the General Visual Inspection method around the part 1 doubler or part 2 doubler as shown in Detail IV.			

TABLE II

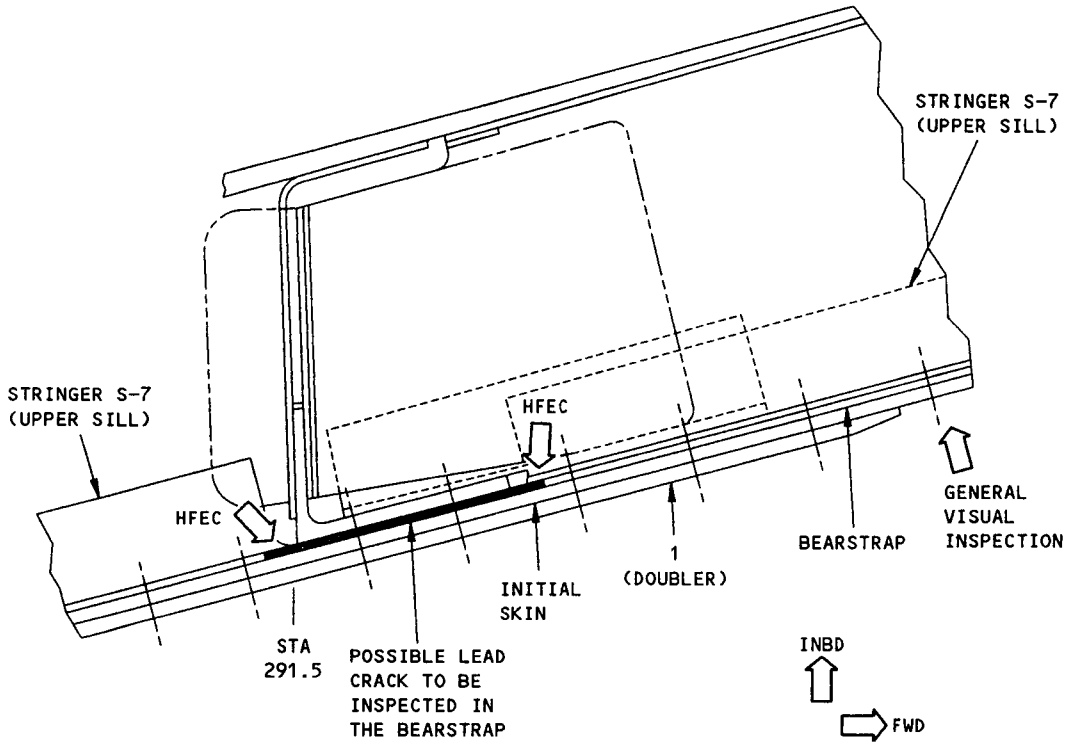

INSPECTION AREA FOR F-15A AT FORWARD FRAME, ALMOST THE SAME AT AFT FRAME
DETAIL IV

Fuselage Stringer S-7 Crack Repairs
Figure 5 (Sheet 5)

BOEING PROPRIETARY - Copyright © - Unpublished Work - See title page for details.

STRUCTURAL REPAIR

SERVICE BULLETIN REPAIRS - BODY FRAMES

The following Service Bulletins contain repairs which are available for use where specific damage has been encountered. Usually, the Service Bulletin also covers preventive modification data which operators are encouraged to use to eliminate the need for repair.

DAMAGED AREA	CUM LINE NUMBER EFFECTIVITY [A]	SB NUMBER
FUSELAGE - FORWARD AND AFT CARGO COMPARTMENT BODY FRAME INSPECTION, REPAIR AND MODIFICATION	1 THRU 967, EXCLUDING CARGO AIRPLANES	737-53A1027
FUSELAGE - WING-TO-BODY DRAG ANGLE INSPECTION AND REPLACEMENT	1 THRU 277, 278, 279 280 THRU 316	737-53-1031
FORWARD LOWER CARGO DOORWAY FRAMES	1 THRU 509	737-53-1051
FUSELAGE - BODY STATION 727 COMPRESSION CHORD INSPECTION, REPAIR AND MODIFICATION	1 THRU 540	737-53-1053
FUSELAGE - BODY STATION 685 AND 706 FRAME FITTING RIB INSPECTION, REPAIR AND MODIFICATION	1 THRU 96, 99, 101, 103, 106, 107	737-53-1055
FUSELAGE - OVERWING FRAME BS 559 THRU BS 639	1 THRU 848	737-53-1061
BS 1138 FRAME SHEAR TIE	1 THRU 845	737-53-1062
FUSELAGE - AIRSTAIR DOORWAY SILL BS 351.2 AND 360	1 THRU 951	737-53A1064
FUSELAGE - BODY STATION 727 COMPRESSION CHORD INSPECTION, REPAIR AND MODIFICATION	541 THRU 990	737-53-1072
BS 1016 AFT PRESSURE BULKHEAD	1 THRU 929	737-53A1075
FUSELAGE - NOSE WHEEL WELL AFT BULKHEAD AND UPPER PANEL REINFORCEMENT	1 THRU 374	737-53-1079
FUSELAGE - BS 695 FRAME LOWER FITTING	1 THRU 1000	737-53-1080
BS 1156 BULKHEAD OUTBOARD CHORD	1 THRU 1077	737-53-1086

[A] FOR AIRPLANES ON WHICH PREVENTIVE MODIFICATION HAS NOT BEEN ACCOMPLISHED

BOEING PROPRIETARY - Copyright © - Unpublished Work - See title page for details.

The following service bulletins contain repairs which are available for use where specific damage has been encountered. Usually, the service bulletin also covers preventive modification data which operators are encouraged to use to eliminate the need for repair.

DAMAGED AREA	CUM LINE NUMBER EFFECTIVITY [A]	SB NUMBER
WINGS - MAIN LANDING GEAR TRUNNION SUPPORT BEAM AND BODY STATION 706 FRAME LUG INSPECTION AND MODIFICATION	1 THRU 310	737-57-1071
FUSELAGE - BS 277 FRAME AND BS 294.5 FLOOR BEAM INSPECTION AND REINFORCEMENT	1 THRU 1207	737-53-1090
FUSELAGE - AFT ENTRY AND GALLEY DOORWAYS, INSPECTION AND REINFORCEMENT	1 THRU 1212, 1223, 1226	737-53-1094
FUSELAGE - AFT LOWER CARGO DOORWAY FRAME INSPECTION, MODIFICATION AND REPAIR	6 THRU 1204	737-53-1096
FUSELAGE - BODY STATION 540 BULKHEAD FORGING INSPECTION, MODIFICATION AND REPAIR	1 THRU 71, 73 THRU 83, 85 THRU 89, 91 THRU 93	737-53-1099
FUSELAGE - FORWARD SERVICE DOORWAY - AFT FRAME	1 THRU 1426	737-53A1108
FUSELAGE - BS 663.75 FRAME AT STRINGER 17	1 THRU 972	737-53-1110
BBL 70.85 RIB UPPER CHORD AND BS 663.75 BULKHEAD FITTING	1 THRU 433, 436, 437	737-57-1087
BS 663.75 BULKHEAD FITTING	434, 435, 438 THRU 844	737-57-1137
FUSELAGE - FORWARD AND AFT CARGO DOORWAY FRAME INSPECTION, PREVENTIVE CHANGE, AND REPAIR	ALL 737-100 AIRPLANES	737-53-1121
FUSELAGE - FORWARD CORNERS OF HORIZONTAL STABILIZER CUTOUTS AT UPPER AND LOWER HORIZONTAL BEAM, BODY STATION 1138	1 THRU 1585	737-53-1134

[A] FOR AIRPLANES ON WHICH PREVENTIVE MODIFICATION HAS NOT BEEN ACCOMPLISHED

BOEING PROPRIETARY - Copyright © - Unpublished Work - See title page for details.

SERVICE BULLETIN REPAIRS - BODY FRAMES

The following service bulletins contain repairs which are available for use where specific damage has been encountered. Usually, the Service Bulletin also covers preventive modification data which operators are encouraged to use to eliminate the need for repair.

DAMAGED AREA	CUM LINE NUMBER EFFECTIVITY [A]	SB NUMBER
FUSELAGE - FRAMES - BS 727 OUTBOARD CHORD AT STRINGER 18A, INSPECTION AND PREVENTATIVE MODIFICATION	1 THRU 999	737-53A1166
FUSELAGE - FRAME INNER CHORD CRACK INSPECTION, REPAIR, AND MODIFICATION - BS 616 AND BS 639	849 THRU 1585	737-53-1182
FUSELAGE - BODY STATION 303.9 FRAME - WEB CRACKS AT EDGE OF HOLE FOR DOOR STOP FITTING STRAP AT STRINGER 16 LEFT - INSPECTION AND PREVENTIVE CHANGE/REPAIR	ALL	737-53A1197
FUSELAGE - FRAMES AND BULKHEADS - BODY STATION 685 FRAME LOWER FITTING INSPECTION, REPAIR AND REPLACEMENT	ALL	737-53-1246

[A] FOR AIRPLANES ON WHICH PREVENTIVE MODIFICATION HAS NOT BEEN ACCOMPLISHED

BOEING PROPRIETARY - Copyright © - Unpublished Work - See title page for details.

APPLICABILITY

THIS REPAIR IS APPLICABLE FOR DAMAGED FUSELAGE Z FRAMES

REPAIR INSTRUCTIONS

1. Trim out body frames as required.
2. If the skin has been damaged, repair as required.
3. Remove all burrs, nicks, scratches, sharp edges and corners from the damaged area and from the repair parts.
4. Repair as shown in Detail I or II.
5. Fabricate repair parts 1, 2, and 3 as required.
6. Apply chemical conversion coating to all cut edges on repair parts.
7. Locate and drill fastener holes. See Table II for number and type of fasteners required.
8. Install repair parts.
9. Refinish according to the Maintenance Manual.

NOTES

- THIS REPAIR WILL HAVE AN EFFECT ON THE STRUCTURALLY SIGNIFICANT ITEM (SSI):
  - NUMBER F-33 OR F-34 WHEN INSTALLED BELOW STRINGER S-13 LEFT OR RIGHT. THE INSPECTIONS FOR F-33A THRU F-34A THRU C ARE STILL APPLICABLE WITH THIS REPAIR INSTALLED; BUT, INSPECT THE VISIBLE PORTION OF THE INITIAL FRAME AND FAIL-SAFE CHORD.
  - NUMBER F-36 WHEN INSTALLED ABOVE STRINGER S-13 LEFT OR RIGHT. A NEW INSPECTION METHOD IS NECESSARY FOR F-36 FOR THIS REPAIR. SEE TABLE III FOR NEW INSPECTION REQUIREMENTS FOR F-36.

  DO THE INSPECTIONS FOR F-33 AND F-34, IF NECESSARY AT THE SUBSEQUENT SUPPLEMENTAL STRUCTURAL INSPECTION DOCUMENT (SSID) INSPECTION ON THIS AIRPLANE. REFER TO SRM 51-00-4, FIGURE 3 FOR THE APPLICABLE SSI DATA.
- SEE SRM 51-30 FOR FASTENER CODE, REMOVAL AND INSTALLATION, HOLE SIZES, EDGE MARGINS AND SUBSTITUTIONS.
- SEE SRM 51-10-2 FOR PROTECTIVE METAL TREATMENT

[A] SAME GAGE AS ORIGINAL FRAME

[B] REFER TO BOEING DRAWING NUMBER 69-78188 TO MAKE OR GET THE REPAIR PARTS.

[C] IF THE AIRPLANE IS ABOVE THIS INSPECTION THRESHOLD, DO THE NEW INSPECTION METHOD AT THE SUBSEQUENT SSID INSPECTION FOR F-36 ON THIS AIRPLANE.

FASTENER SYMBOLS

INITIAL FASTENER LOCATION.

REPAIR FASTENER LOCATION.

Fuselage "Z" Frame Repair
Figure 1 (Sheet 1)

BOEING PROPRIETARY - Copyright © - Unpublished Work - See title page for details.

REPAIR MATERIAL			
PART		QUANTITY	MATERIAL
1	CHANNEL [B]	1	7075-T6 CLAD [A]
2	CHANNEL [B]	1	7075-T6 CLAD [A]
3	FILLER	1	7075-T6 CLAD [A]

TABLE I

MINIMUM NUMBER OF FASTENERS REQUIRED IN EACH ROW ON EACH SIDE OF DAMAGE			
ORIGINAL ZEE SECTION	GAGE	FASTENER	QUANTITY
BAC1517-1470	0.040	MS2040D-5	5
BAC1517-1147	0.045	MS2040D-5	5
BAC1517-705	0.051	MS2040D-5	5
BAC1517-1062	0.056	MS2040D-6	4
BAC1517-1004	0.072	MS2040D-6	5

TABLE II

SSID NUMBER F-36 INSPECTION REQUIREMENTS			
INSPECTION THRESHOLD	REPEAT INSPECTION		
	METHOD	INTERVAL	REFERENCE
66,000 CYCLES AFTER AIRPLANE DELIVERY [C]	HIGH FREQUENCY EDDY CURRENT (HFEC)	21,000 CYCLES	737 NDT, D6-37239, PART 6, 51-00-00, FIGURE 4 OR 23
NOTE: INSPECT THE FRAME WITH HFEC METHOD IN THE REPAIR AREA AS SHOWN IN DETAIL III AND IV AS APPLICABLE. DO A DETAILED VISUAL INSPECTION OF THE VISIBLE PARTS OF THE INITIAL FRAME IN THE OTHER AREAS OF THE REPAIR			

TABLE III

Fuselage "Z" Frame Repair
Figure 1 (Sheet 2)

BOEING PROPRIETARY - Copyright © - Unpublished Work - See title page for details.

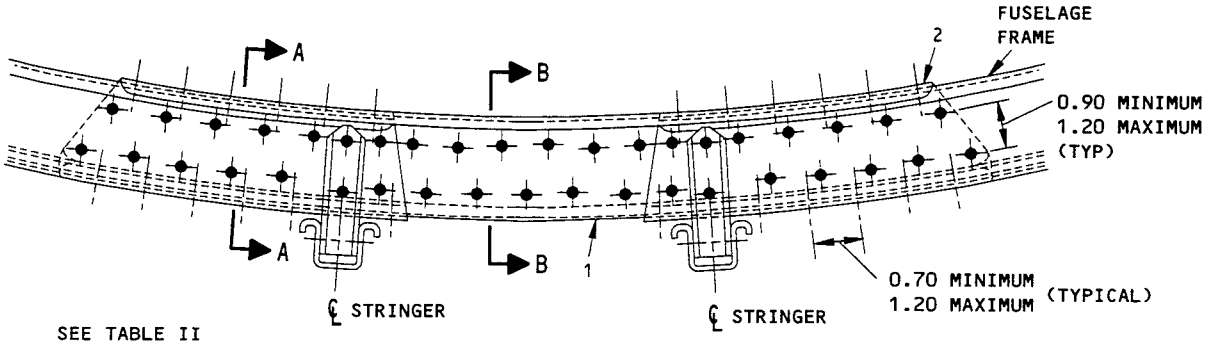

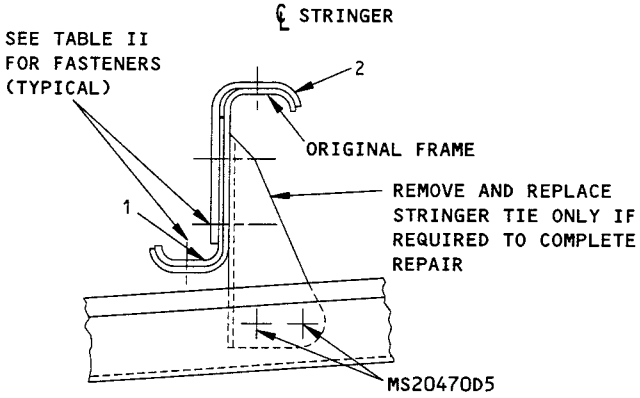

SECTION A-A

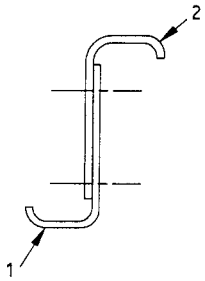

SECTION B-B

DETAIL I

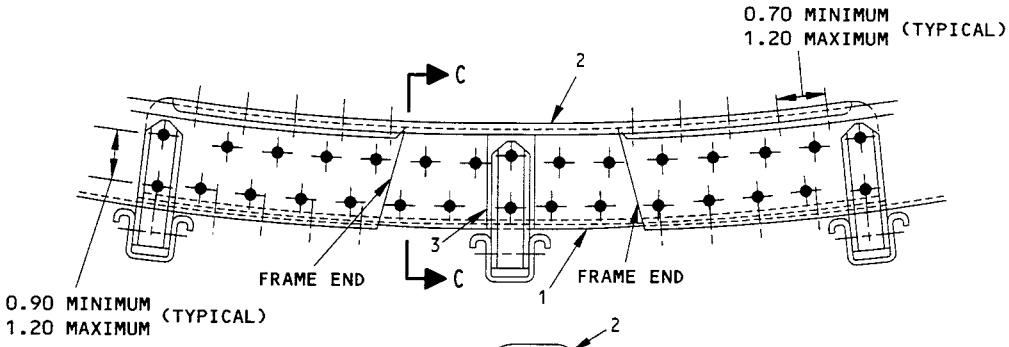

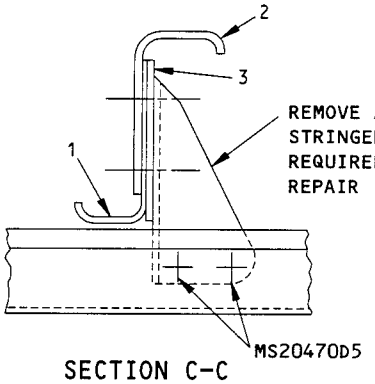

SECTION C-C

DETAIL II

Fuselage "Z" Frame Repair
Figure 1 (Sheet 3)

BOEING PROPRIETARY - Copyright © - Unpublished Work - See title page for details.

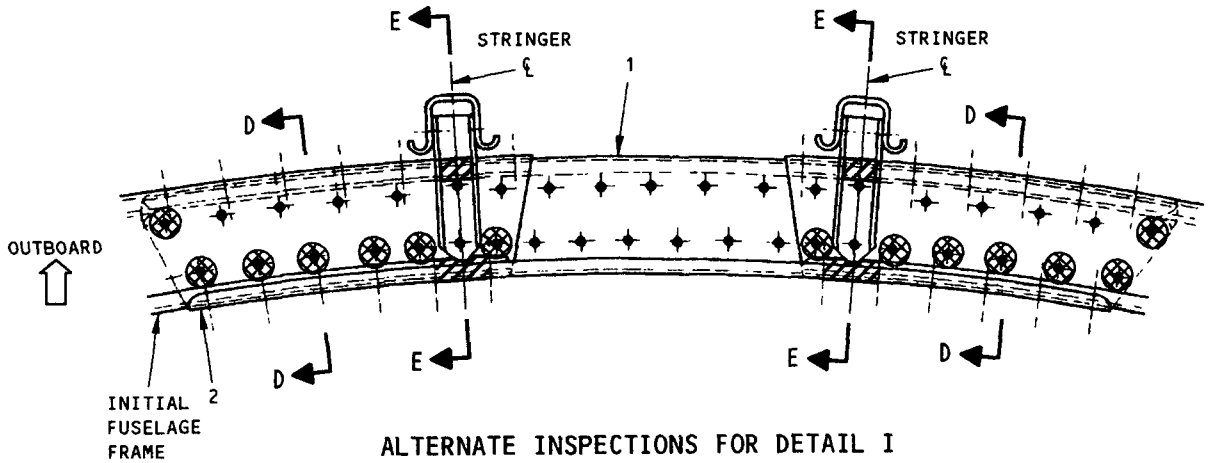

ALTERNATE INSPECTIONS FOR DETAIL I

DETAIL III

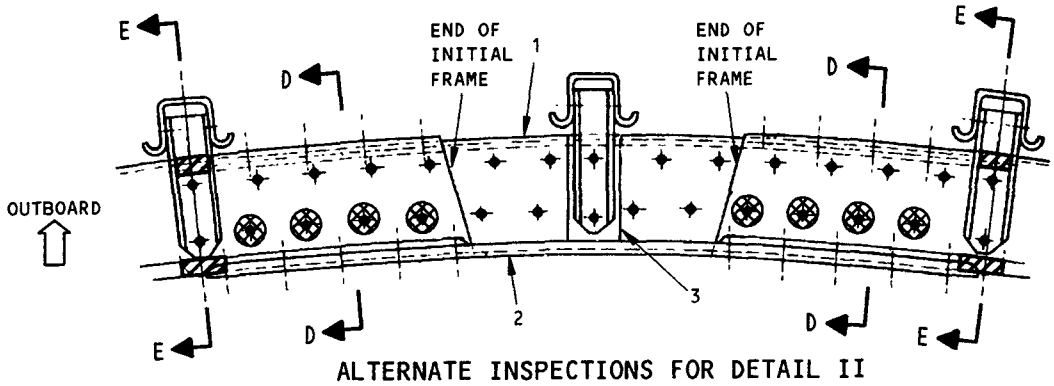

ALTERNATE INSPECTIONS FOR DETAIL II

DETAIL IV

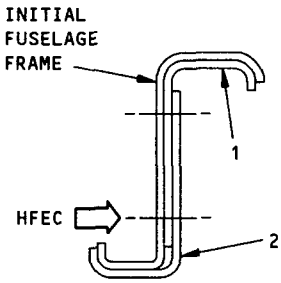

SECTION D-D

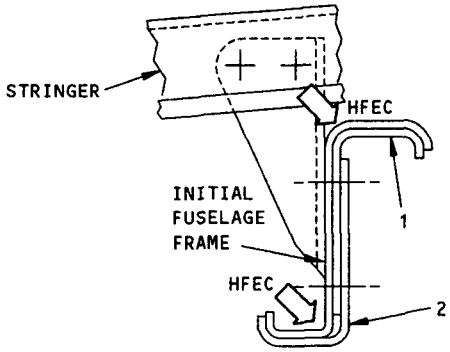

SECTION E-E

INSPECT THE BEND RADII OF THE INITIAL FRAME WITH HFEC METHOD AT THE STRINGER CLIP LOCATIONS

INSPECT THE INITIAL FRAME AROUND THE FIRST ROW OF FASTENERS WITH HFEC METHOD

Fuselage "Z" Frame Repair
Figure 1 (Sheet 4)

BOEING PROPRIETARY - Copyright © - Unpublished Work - See title page for details.

APPLICABILITY

THIS REPAIR CAN BE USED:

A. FOR A PARTIALLY DAMAGED FUSELAGE FRAME

B. FOR A FRAME FLANGE THAT HAS BEEN TRIMMED TO PERMIT REMOVAL OF A STRINGER.

REPAIR INSTRUCTIONS

CAUTION: CARE MUST BE EXERCISED TO PREVENT SAGGING OF THE AIRFRAME BY SUPPORTING IT IN THE JIG POSITION ACCORDING TO SRM 51-50-1 BEFORE MAJOR REPAIRS TO FRAMES ARE UNDERTAKEN.

1. Trim out the body frames as required.
2. If the skin has been damaged, repair as required.
3. Remove all burrs, nicks, scratches, sharp edges and corners from the damaged area and from the repair parts.
4. Repair as shown.
5. Fabricate repair parts 1 and 2 as required.
6. Apply a chemical conversion coating to all cut edges on repair parts and original parts.
7. Locate and drill fastener holes. See Table I for number of fasteners required.
8. Install the repair parts.
9. Refinish according to the Maintenance Manual.

NOTES

- THIS REPAIR WILL HAVE AN EFFECT ON STRUCTURALLY SIGNIFICANT ITEM (SSI) NUMBER F-36 AND A NEW INSPECTION METHOD IS NECESSARY FOR THIS REPAIR. SEE TABLE III FOR NEW INSPECTION REQUIREMENTS FOR F-36. REFER TO SRM 51-00-4, FIGURE 3 FOR THE APPLICABLE SSI DATA.
- BREAK SHARP EDGES 0.03 ALL REPAIR PARTS AND TRIMMED ORIGINAL PARTS.
- SEE SRM 51-10-2 FOR METAL PROTECTIVE TREATMENT.
- SEE SRM 51-30 FOR FASTENER CODE, REMOVAL AND INSTALLATION, HOLE SIZES, EDGE MARGINS AND SUBSTITUTIONS.
- NUMBER OF FASTENERS REQUIRED ARE FOR EACH SIDE OF DAMAGE.
- REPAIR OF 0.072 GAGE FRAME SHOWN. THIS REPAIR CAN BE USED AT OTHER LOCATIONS WHERE SIMILAR FRAME AND CONFIGURATION EXISTS.

[A] AS REQUIRED BY SIZE OF DAMAGE.

[B] IF THE AIRPLANE IS ABOVE THE INSPECTION THRESHOLD, DO THE NEW INSPECTION METHOD AT THE SUBSEQUENT SSID INSPECTION FOR F-36 ON THIS AIRPLANE.

FASTENER SYMBOLS

INITIAL FASTENER LOCATION.

REPAIR FASTENER LOCATION.

Fuselage Crown Frame Repair
Figure 2 (Sheet 1)

BOEING PROPRIETARY - Copyright © - Unpublished Work - See title page for details.

REPAIR MATERIAL													
ORIGINAL GAGE		0.040		0.045		0.051		0.056		0.063		0.072	
PART		QTY	MATERIAL	QTY	MATERIAL	QTY	MATERIAL	QTY	MATERIAL	QTY	MATERIAL	QTY	MATERIAL
1	CHANNEL	1	0.045 CLAD 7075-0, H.T. -T6	1	0.051 CLAD 7075-0, H.T. -T6	1	0.056 CLAD 7075-0, H.T. -T6	1	0.063 CLAD 7075-0, H.T. -T6	1	0.072 CLAD 7075-0, H.T. -T6	1	0.080 CLAD 7075-0, H.T. -T6
2	FILLER	1	0.040 CLAD 7075-0, H.T. -T6	1	0.045 CLAD 7075-0, H.T. -T6	1	0.050 CLAD 7075-0, H.T. -T6	1	0.056 CLAD 7075-0, H.T. -T6	1	0.063 CLAD 7075-0, H.T. -T6	1	0.071 CLAD 7075-0, H.T. -T6

TABLE I

REPAIR FASTENERS					
FRAME THICKNESS	FASTENER TYPE	MINIMUM NUMBER OF FASTENERS REQUIRED ON EACH SIDE OF DAMAGE IN EACH ROW			
		ROW W	ROW X	ROW Y	ROW Z
0.040 0.045 0.051 0.056 0.063	MS20470D6	4	4	A	A
0.072	MS20470D6	5	5	A	A

TABLE II

Fuselage Crown Frame Repair
Figure 2 (Sheet 2)

BOEING PROPRIETARY - Copyright © - Unpublished Work - See title page for details.

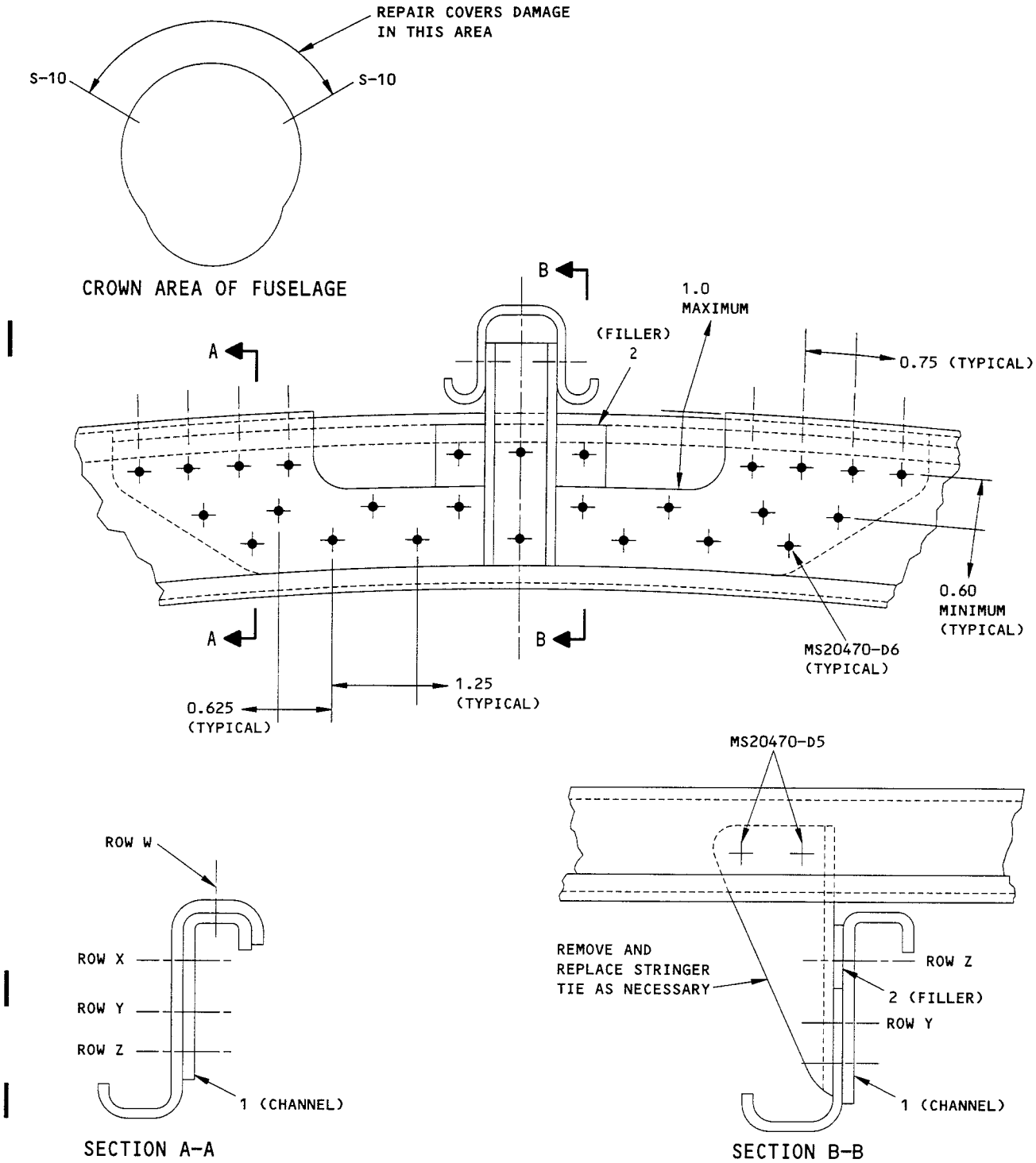

DETAIL I

Fuselage Crown Frame Repair
Figure 2 (Sheet 3)

BOEING PROPRIETARY - Copyright © - Unpublished Work - See title page for details.

SSID NUMBER F-36 INSPECTION REQUIREMENTS			
INSPECTION THRESHOLD	REPEAT INSPECTION		
	METHOD	INTERVAL	REFERENCE
66,000 CYCLES AFTER AIRPLANE DELIVERY [B]	HIGH FREQUENCEY EDDY CURRENT (HFEC)	21,000 CYCLES	737 NDT, D6-37239, PART 6, 51-00-00, FIGURE 4 OR 23
NOTE: INSPECT THE FRAME WITH HFEC METHOD IN THE REPAIR AREA AS SHOWN IN DETAIL II. DO A DETAILED VISUAL INSPECTION OF THE VISIBLE PARTS OF THE INITIAL FRAME IN THE OTHER AREAS OF THE REPAIR.			

TABLE III

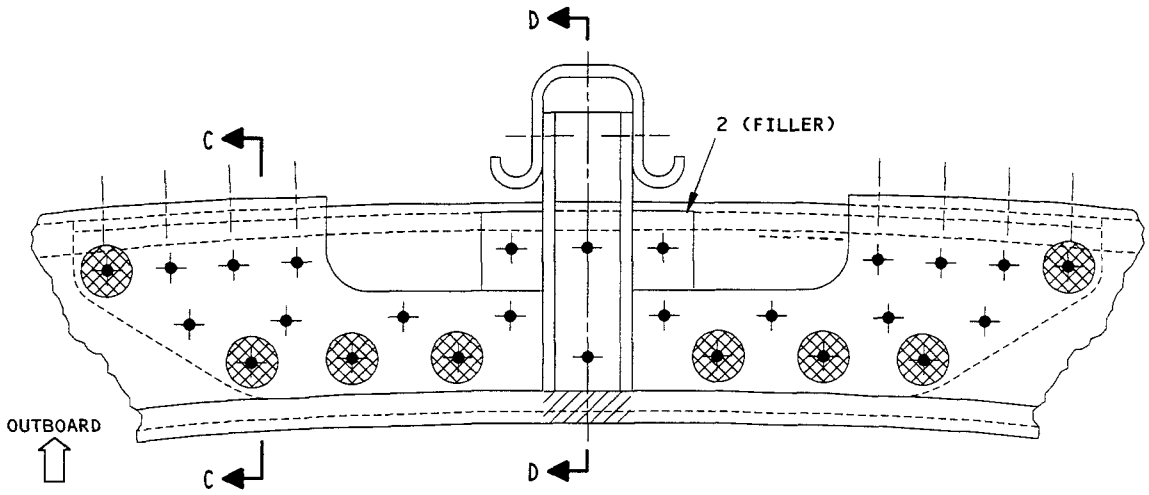

ALTERNATE INSPECTIONS FOR DETAIL I
DETAIL II

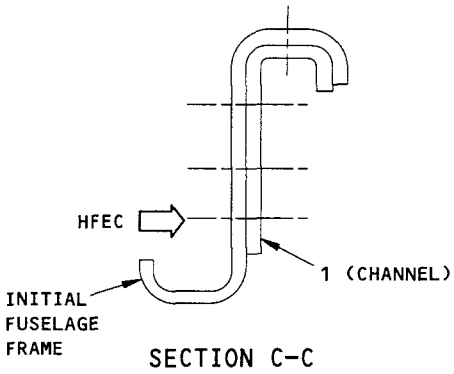

SECTION C-C

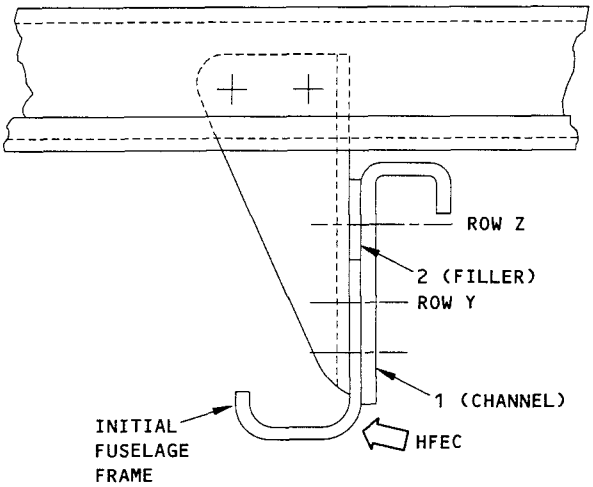

SECTION D-D

INSPECT THE BEND RADIUS OF THE INITIAL FRAME WITH HFEC METHOD AT THE STRINGER CLIP LOCATION

INSPECT THE INITAL FRAME AROUND THE FIRST ROW OF FASTENERS

Fuselage Crown Frame Repair
Figure 2 (Sheet 4)

BOEING PROPRIETARY - Copyright © - Unpublished Work - See title page for details.

THIS REPAIR IS OBSOLETE AFTER NOVEMBER 23, 2005.
IT IS REPLACED WITH FIGURE 3A.

Repair to Pressure Bulkhead at Station 1016
Figure 3

BOEING PROPRIETARY - Copyright © - Unpublished Work - See title page for details.

APPLICABILITY

THIS REPAIR IS APPLICABLE TO AN "OIL CAN" CONDITION, DENT, NICKS, SCRATCHES, GOUGES OR CORROSION IN THE WEB OF THE BODY STATION 1016 PRESSURE BULKHEAD AS SHOWN IN DETAIL II, ZONE 1

THIS REPAIR IS NOT APPLICABLE AS SHOWN IN DETAIL II, ZONE 2.

THIS REPAIR IS NOT APPLICABLE TO CRACKS IN THE WEB OR TEAR STRAPS OF THE BULKHEAD.

THIS REPAIR IS AN ALTERNATIVE TO SRM 53-10-4, FIGURE 5A. FIGURE 5A DOES NOT CUT OUT THE DAMAGE.

THIS REPAIR IS NOT APPLICABLE IF THE EDGE OF THE PART 1 PLATE IS LESS THAN 3.0 INCHES FROM THE EDGE OF THE PRESSURE CHORD.

REPAIR INSTRUCTIONS

1. Get access to the damaged area.
2. Remove the fasteners from the repair area.
3. Cut and remove the damaged area of the pressure bulkhead web, as necessary.
4. Do an HFEC rotary probe inspection as given in 737 NDT, Part 6, 51-00-00, Figure 16, in all initial fastener holes that are common to the repair.
5. Make the repair parts as given in Table I and as shown in Details III, IV or V, as applicable. Make sure that the contour of the repair parts match the initial contour.
   - Use a part number 65C37292-8 gore web section to make the repair plate and repair strap, where applicable.
6. Assemble the repair parts as shown in Details III, IV or V, as applicable.
7. Drill the fastener holes. Refer to SRM 51-30-5 for the fastener hole sizes.
8. Disassemble the repair parts.
9. Remove all the nicks, scratches, burrs and sharp edges from the repair parts and the initial parts. All surfaces must have a surface smoothness of 63 microinches Ra or better.
10. Apply a chemical conversion coating to the repair parts and to the bare surfaces of the initial parts. Refer to SRM 51-10-2.
11. Apply two layers of BMS 10-11, Type I primer to the repair parts and to the bare surfaces of the initial parts. Refer to SOPM 20-41-02.
12. Install the repair parts with BMS 5-95 sealant between the mating surfaces. Fill all gaps with BMS 5-95 sealant. A maximum pull-up gap of 0.010 inch is permitted. Refer to SRM 51-20-4.
13. Install the fasteners as shown in Details III, IV or V, as applicable. Refer to SRM 51-30-02.
14. After the repair installation, do the NDT inspections for the crack damage to the pressure dome web at the threshold and repeat intervals, as given in Table II.

NOTES

- THIS REPAIR IS CATEGORY B. THE CATEGORY B REPAIR HAS FAA APPROVAL IF YOU DO THE SUPPLEMENTAL INSPECTIONS AS GIVEN IN TABLE II.
- THIS REPAIR HAS AN EFFECT ON A STRUCTURAL IMPORTANT ITEM (SSI) F-30E, AS GIVEN IN SRM 51-00-4, FIGURE 3.
  - THE INSPECTIONS GIVEN IN TABLE II OF THIS REPAIR ARE APPROVED AS AN ALTERNATE METHOD OF COMPLIANCE (AMOC) TO PARAGRAPH (G) OF AIRWORTHINESS DIRECTIVE (AD) 98-11-04 R1, FOR THE INSPECTION OF STRUCTURALLY SIGNIFICANT ITEM F-30E OF SUPPLEMENTAL STRUCTURAL INSPECTION DOCUMENT D6-37089, IN THE AREA AFFECTED BY THIS REPAIR. THIS AMOC ONLY APPLIES TO THE AREAS INSPECTED AS GIVEN IN THIS REPAIR, AND TO THOSE AIRCRAFT IDENTIFIED IN THIS SRM. ALL PROVISIONS OF AD 98-11-04 R1 THAT ARE NOT SPECIFICALLY REFERENCED IN THE ABOVE STATEMENTS REMAIN FULLY APPLICABLE AND MUST BE COMPLIED WITH.
- ALL DIMENSIONS ARE IN INCHES UNLESS SHOWN DIFFERENTLY.
- D = FASTENER DIAMETER
- USE A MINIMUM OF 2D EDGE MARGIN UNLESS SHOWN DIFFERENTLY.
- USE 4D - 6D FASTENER SPACING BETWEEN REPAIR FASTENERS.

Body Station 1016 Pressure Bulkhead Cutout Repair
Figure 3A (Sheet 1)

BOEING PROPRIETARY - Copyright © - Unpublished Work - See title page for details.

NOTES (CONT.)

- WHEN YOU USE THIS REPAIR, REFER TO:
  - 737 NDT, PART 6, 51-00-00, FOR HIGH FREQUENCY EDDY CURRENT (HFEC) INSPECTION PROCEDURES
  - 737 NDT, PART 6, 53-10-41, FOR LOW FREQUENCY EDDY CURRENT (LFEC) INSPECTION PROCEDURES
  - 737 NDT, PART 6, 51-00-00 FIGURE 16, FOR HIGH FREQUENCY EDDY CURRENT (HFEC) ROTARY PROBE INSPECTION PROCEDURE.
  - SOPM 20-41-02 FOR APPLICATION OF FINISHES
  - SRM 51-10-2 FOR PROTECTIVE TREATMENT OF METALLIC AND GRAPHITE MATERIALS
  - SRM 51-20-4 FOR REPAIR SEALING
  - SRM 51-30 FOR FASTENER CODE, REMOVAL INSTALLATION, HOLE SIZES AND EDGE MARGINS.

FASTENER SYMBOLS

REFERENCE FASTENER LOCATION.

INITIAL FASTENER LOCATION. INSTALL A BACR15FT5D() RIVET. AS AN ALTERNATIVE, INSTALL A BACR15BB5D() OR AN MS20470D5 RIVET.

REPAIR FASTENER LOCATION. INSTALL A BACR15FT5D() RIVET. AS AN ALTERNATIVE, INSTALL A BACR15BB5D() OR AN MS20470D5 RIVET.

REPAIR OR INITIAL FASTENER LOCATION. INSTALL A BACR15FT6D() RIVET. AS AN ALTERNATIVE, INSTALL A BACR15BB6D() OR AN MS20470D6 RIVET.

REPAIR MATERIAL			
PART NO.	PART	QUANTITY	MATERIAL
1	PLATE	1	USE GORE WEB SECTION PART NUMBER 65C37292-8
2	STRAP	1	USE GORE WEB SECTION PART NUMBER 65C37292-8, WHEN THE INITIAL STRAP GAGE IS 0.040 INCH OR LESS. CONTACT BOEING IF THE INITIAL STRAP GAGE IS MORE THAN 0.040 INCH.
3	FILLER	AS NECESSARY	USE 2024-T3 CLAD SHEET THAT HAS THE SAME THICKNESS OF THE PARTS THAT WERE CUT OUT

TABLE I

Body Station 1016 Pressure Bulkhead Cutout Repair
Figure 3A (Sheet 2)

BOEING PROPRIETARY - Copyright © - Unpublished Work - See title page for details.

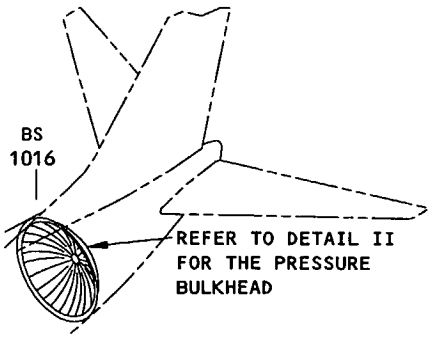

BODY STATION 1016
BULKHEAD LOCATION

DETAIL I

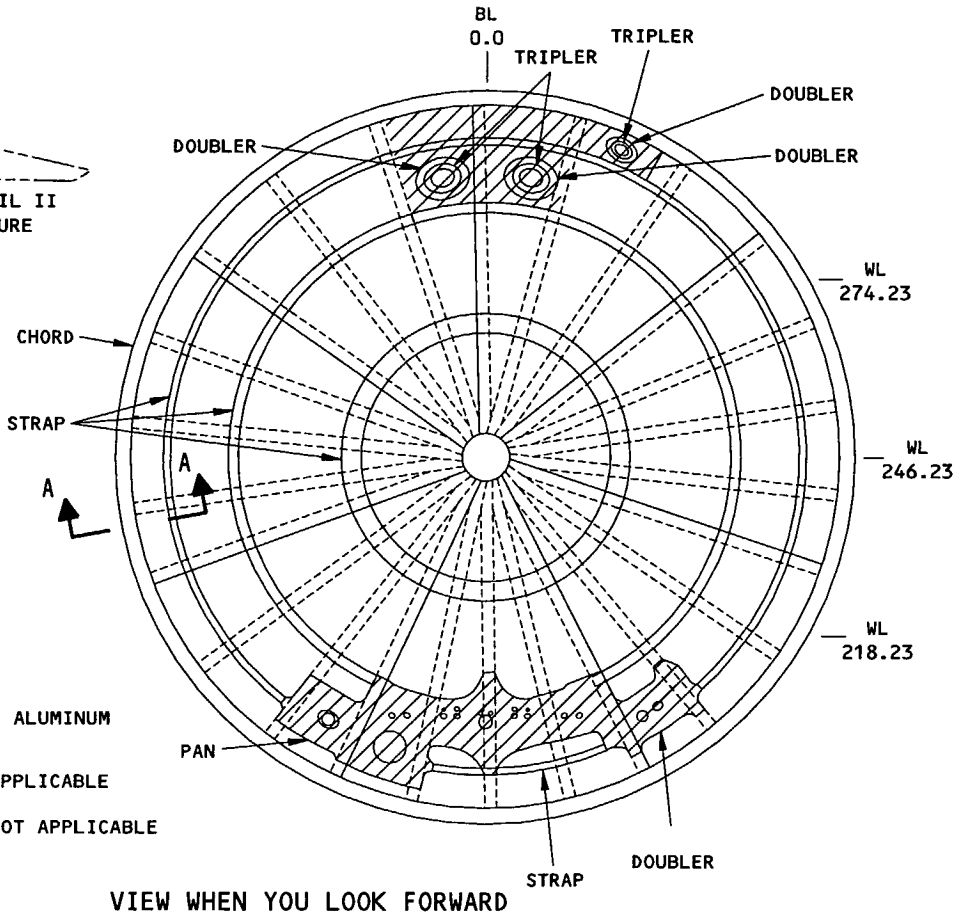

NOTE: ALL PARTS ARE MADE OF ALUMINUM EXCEPT AS NOTED.

ZONE 1 – REPAIR IS APPLICABLE

ZONE 2 – REPAIR IS NOT APPLICABLE

VIEW WHEN YOU LOOK FORWARD

BODY STATION 1016 PRESSURE BULKHEAD
DETAIL II

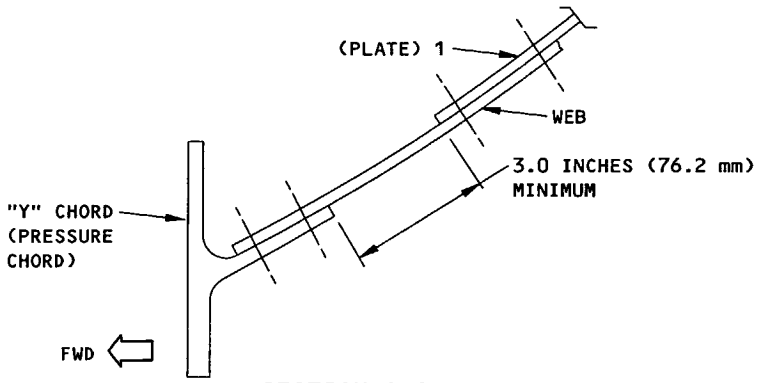

SECTION A-A

Body Station 1016 Pressure Bulkhead Cutout Repair
Figure 3A (Sheet 3)

BOEING PROPRIETARY – Copyright © – Unpublished Work – See title page for details.

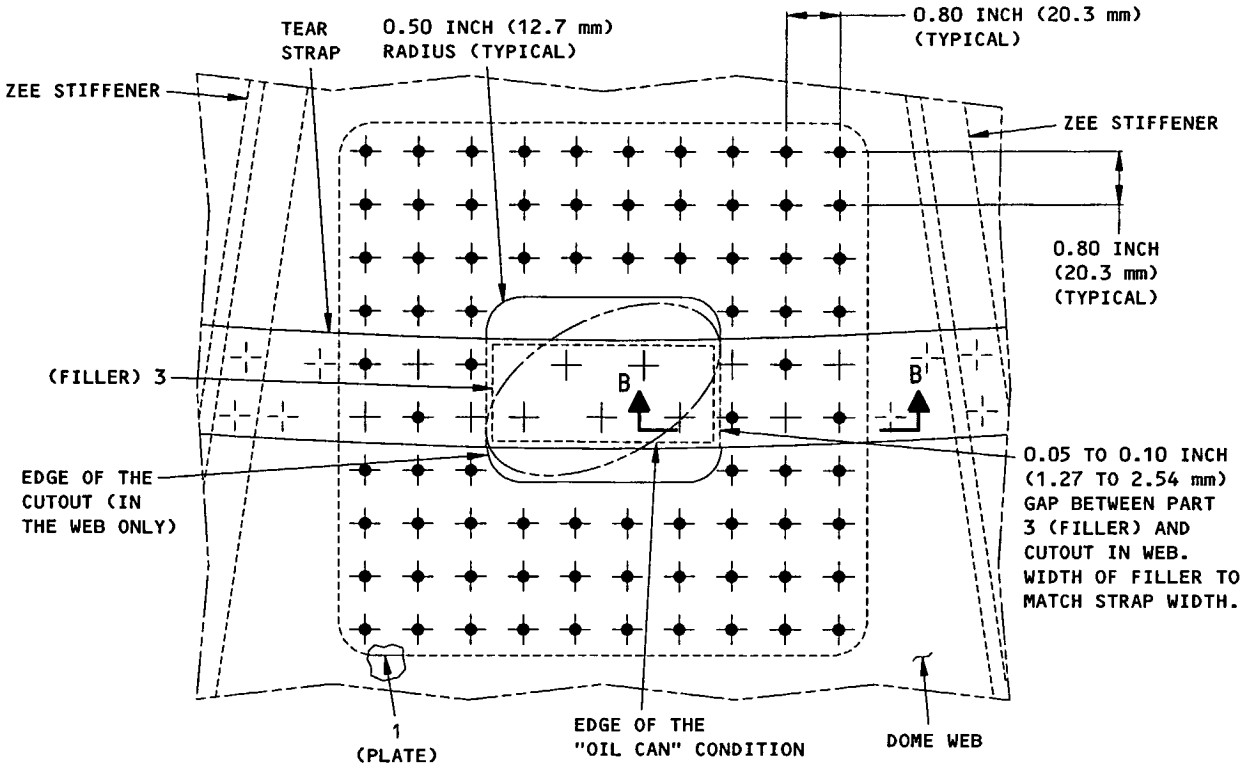

NOTES

- DO NOT DAMAGE THE TEAR STRAP DURING THE REPAIR PROCEDURE
- IF THERE IS NOT SUFFICIENT CLEARANCE BETWEEN THE PART 1 PLATE AND ANY ADJACENT ZEE STIFFENERS CONTACT THE BOEING COMPANY FOR ADDITIONAL REPAIR INSTRUCTIONS.

VIEW WHEN YOU LOOK FORWARD

DAMAGE TO THE WEB IN A STRAP AREA IN WHICH THE STRAP IS NOT DAMAGED
DETAIL III

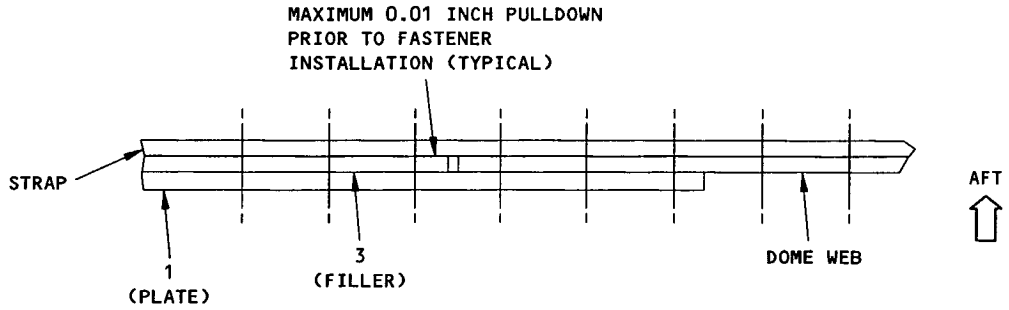

B-B

Body Station 1016 Pressure Bulkhead Cutout Repair
Figure 3A (Sheet 4)

BOEING PROPRIETARY - Copyright © - Unpublished Work - See title page for details.

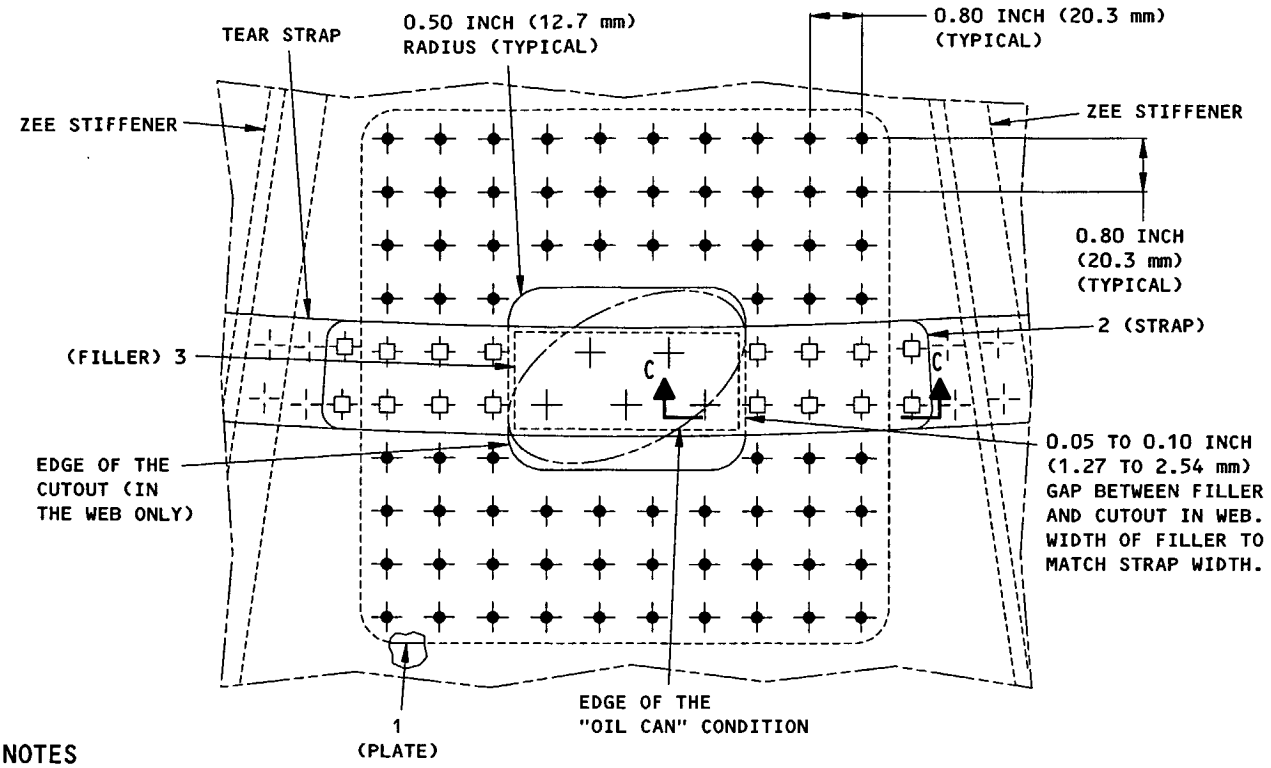

NOTES

- IF THERE IS NOT SUFFICIENT CLEARANCE BETWEEN THE PART 1 (PLATE) AND ANY OF THE ADJACENT ZEE STIFFENERS CONTACT THE BOEING COMPANY FOR ADDITIONAL REPAIR INSTRCTIONS.
- MAKE SURE THAT THE PART 2 (STRAP) DOES NOT EXTEND ON OR THRU THE FASTENERS COMMON TO THE ZEE STIFFENERS. IF THE PART 2 (STRAP) WILL EXTEND ON OR THRU THE FASTENERS COMMON TO THE ZEE STIFFENERS CONTACT THE BOEING COMPANY FOR ADDITIONAL REPAIR INSTRUCTIONS.
- CONTACT THE BOEING COMPANY IF THE GAGE OF THE DAMAGED TEAR STRAP IS MORE THAN 0.040 INCH.

VIEW LOOKING FORWARD

DAMAGE TO THE WEB IN THE AREA OF A STRAP IN WHICH THE STRAP IS DAMAGED
DETAIL IV

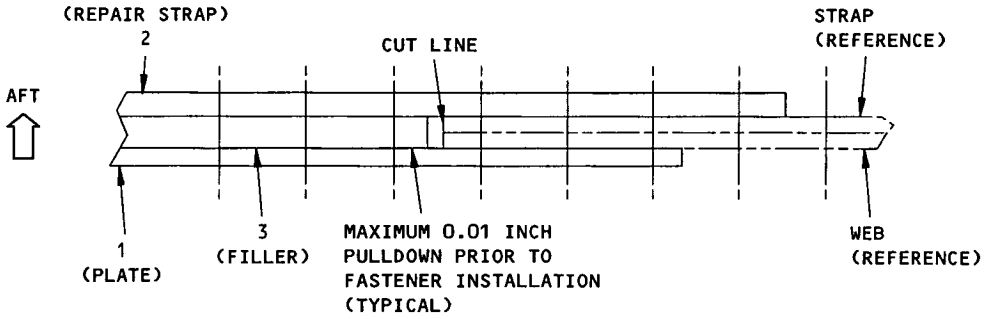

C-C

Body Station 1016 Pressure Bulkhead Cutout Repair
Figure 3A (Sheet 5)

BOEING PROPRIETARY - Copyright © - Unpublished Work - See title page for details.

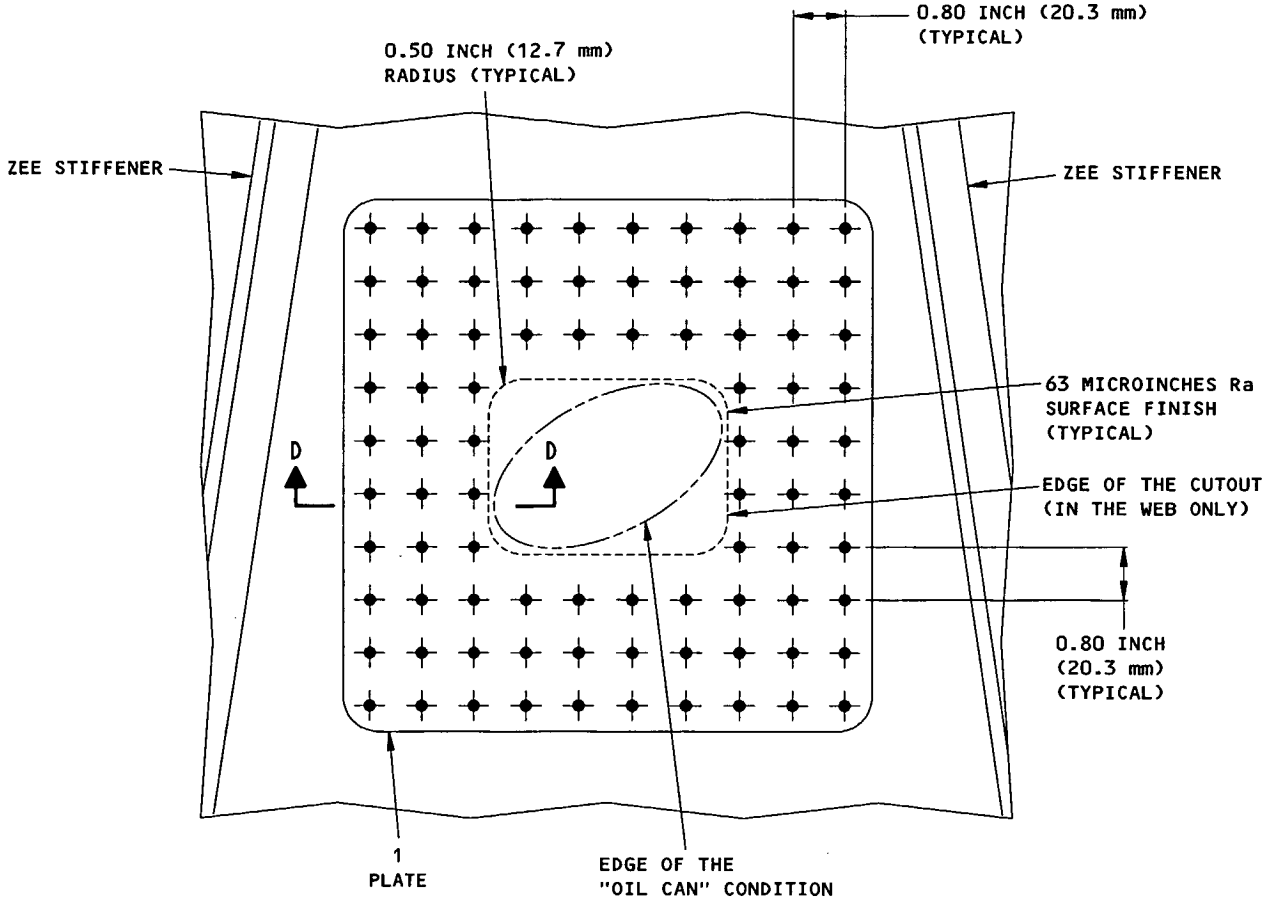

NOTE: IF THERE IS NOT SUFFICIENT CLEARANCE BETWEEN THE PART 1 (PLATE) AND ANY OF THE ADJACENT ZEE STIFFENERS CONTACT THE BOEING COMPANY FOR ADDITIONAL REPAIR INSTRUCTIONS.

VIEW WHEN YOU LOOK AFT

TYPICAL REPAIR FOR DAMAGE TO THE WEB THAT IS NOT IN A STRAP AREA
DETAIL V

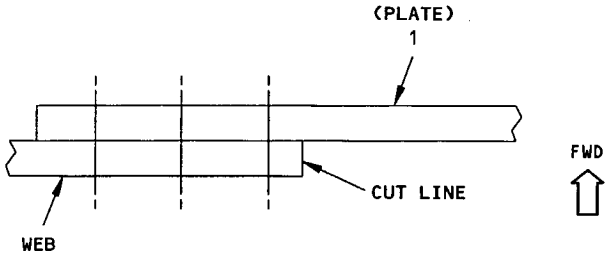

SECTION D-D

Body Station 1016 Pressure Bulkhead Cutout Repair
Figure 3A (Sheet 6)

BOEING PROPRIETARY - Copyright © - Unpublished Work - See title page for details.

CATEGORY B REPAIR INSPECTION REQUIREMENTS			
INSPECTION THRESHOLD	REPEAT INSPECTION INTERVALS		
	METHOD	INTERVAL	REFERENCE
25,000 FLIGHT CYCLES FROM THE TIME THE REPAIR IS DONE (APPLICABLE FOR DETAIL III - DAMAGE TO THE WEB IN THE AREA OF A STRAP IN WHICH THE STRAP IS NOT DAMAGED)	AT FASTENER LOCATIONS COMMON TO THE WEB AND PART 1 (PLATE) ONLY (AWAY FROM THE TEAR STRAP), HIGH FREQUENCY EDDY CURRENT (HFEC) INSPECT THE WEB FROM THE AFT SIDE OF THE BULKHEAD	12,000 FLIGHT CYCLES	737 NDT, PART 6, 51-00-00, FIGURE 4 OR FIGURE 23
	AT FASTENER LOCATIONS COMMON TO A TEAR STRAP, LOW FREQUENCY EDDY CURRENT (LFEC) INSPECT THE WEB FROM THE AFT SIDE OF THE BULKHEAD. PERFORM THE INSPECTION BETWEEN THE AREA BOUNDED BY THE RADIAL ZEE STIFFENERS.	6,000 FLIGHT CYCLES	737 NDT, PART 6, 53-10-41 USING THE RELEVANT REFERENCE STANDARD AT LOCATION D FOR CALIBRATION
25,000 FLIGHT CYCLES FROM THE TIME THE REPAIR IS DONE (APPLICABLE FOR DETAIL IV - DAMAGE TO THE WEB IN THE AREA OF A STRAP IN WHICH THE STRAP IS DAMAGED)	AT FASTENER LOCATIONS COMMON TO THE WEB AND PART 1 (PLATE) ONLY (AWAY FROM THE TEAR STRAP AND THE PART 2 (REPAIR STRAP), HIGH FREQUENCY EDDY CURRENT (HFEC) INSPECT THE WEB FROM THE AFT SIDE OF THE BULKHEAD	12,000 FLIGHT CYCLES	737 NDT, PART 6, 51-00-00, FIGURE 4 OR FIGURE 23
	AT FASTENER LOCATIONS COMMON TO THE PART 2 REPAIR STRAP, LOW FREQUENCY EDDY CURRENT (LFEC) INSPECT THE WEB FROM THE AFT SIDE OF THE BULKHEAD.	6,000 FLIGHT CYCLES	737 NDT, PART 6, 53-10-41 USING THE RELEVANT REFERENCE STANDARD AT LOCATION C FOR CALIBRATION
25,000 FLIGHT CYCLES FROM THE TIME THE REPAIR IS DONE (APPLICABLE FOR DETAIL V - DAMAGE TO THE WEB THAT IS NOT IN A STRAP AREA)	HIGH FREQUENCY EDDY CURRENT (HFEC) INSPECT THE WEB AT FASTENER LOCATIONS COMMON TO THE REPAIR PLATE. INSPECT THE WEB FROM THE AFT SIDE OF THE BULKHEAD	12,000 FLIGHT CYCLES	737 NDT, PART 6, 51-00-00, FIGURE 4 OR FIGURE 23
NOTE: IF CRACK DAMAGE TO THE PRESSURE DOME WEB IS FOUND, THEN REMOVE THE FASTENERS COMMON TO THE REPAIR AND DO A HIGH FREQUENCY EDDY CURRENT (HFEC) ROTARY PROBE INSPECTION AS DETAILED IN THE 737 NDT, PART 6, 51-00-00, FIGURE 16. CONTACT THE BOEING COMPANY FOR FURTHER REPAIR INSTRUCTIONS.			

TABLE II

Body Station 1016 Pressure Bulkhead Cutout Repair
Figure 3A (Sheet 7)

BOEING PROPRIETARY - Copyright © - Unpublished Work - See title page for details.

APPLICABILITY

THIS REPAIR APPLIES TO "Y" SHAPED CRACKS LOCATED IN THE UPPER OUTBOARD CORNER OF THE WEB AT BOTH LBL 45.5 AND RBL 45.5.

THIS REPAIR APPLICABLE ONLY FOR AIRPLANES WITH 0.050 INCH THICK PRESSURE WEB INSTALLED.

REPAIR INSTRUCTIONS

1. Locate ends of cracks in web and drill 0.187 diameter stop holes.
2. Eddy current inspect to ensure crack does not extend beyond stop hole, then oversize stop hole to 0.25 diameter.
3. Drill out rivets in web as required to install repair doubler.
4. Fabricate the repair doubler [1] and filler [2] . Lay out and drill fastener holes to match existing holes in web.
5. Locate and drill repair fastener holes in repair parts and web.
6. Deburr edges of drilled holes. Chamfer or radius 0.015 all cut edges of repair part.
7. Apply chemical conversion coating to new exposed edges, surfaces and fastener holes of original and repair parts.
8. Prime the surfaces of the repair part and bared surfaces of original part with BMS 10-11.
9. Install the doubler and filler wet with faying surface sealer.
10. Install rivets as shown.

NOTES

- THIS REPAIR WILL NOT HAVE AN EFFECT ON A STRUCTURALLY SIGNIFICANT ITEM (SSI) GIVEN IN SRM 51-00-4, FIG. 3. THEREFORE, NO CHANGE TO THE SUPPLEMENTAL STRUCTURAL INSPECTION DOCUMENT (SSID) INSPECTION PROGRAM IS NECESSARY.
- WHEN YOU USE THIS REPAIR, REFER TO:
  - SRM 51-10-02 FOR METAL PROTECTIVE TREATMENT
  - SRM 53-30-04 FOR SEALING NONBONDED FAYING SURFACES
  - SRM 51-30 FOR FASTENER CODES, REMOVAL AND INSTALLATION, HOLE SIZES, EDGE MARGINS AND SUBSTITUTION.
- MAINTAIN 2 TIMES DIAMETER MINIMUM ON EDGE MARGIN AND 4 TIMES DIAMETER MINIMUM SPACING ON ALL NEW FASTENERS.
- MAINTAIN EXISTING EDGE MARGIN AND SPACING ON EXISTING FASTENERS.
- MAINTAIN 0.65 INCH MINIMUM BETWEEN STOP DRILL HOLE AND ADJACENT FASTENER HOLES.

FASTENER SYMBOLS

+ ORIGINAL FASTENER LOCATION

-+- REPAIR FASTENER LOCATION

Repair to Cracked Pressure Web - Bulkhead Station 663.75
Figure 4 (Sheet 1)

BOEING PROPRIETARY - Copyright © - Unpublished Work - See title page for details.

REPAIR MATERIAL			
PART		QTY	MATERIAL
1	DOUBLER	1	0.063 CLAD 2024-T3
2	FILLER	1	0.050 CLAD 2024-T3

Repair to Cracked Pressure Web - Bulkhead Station 663.75
Figure 4 (Sheet 2)

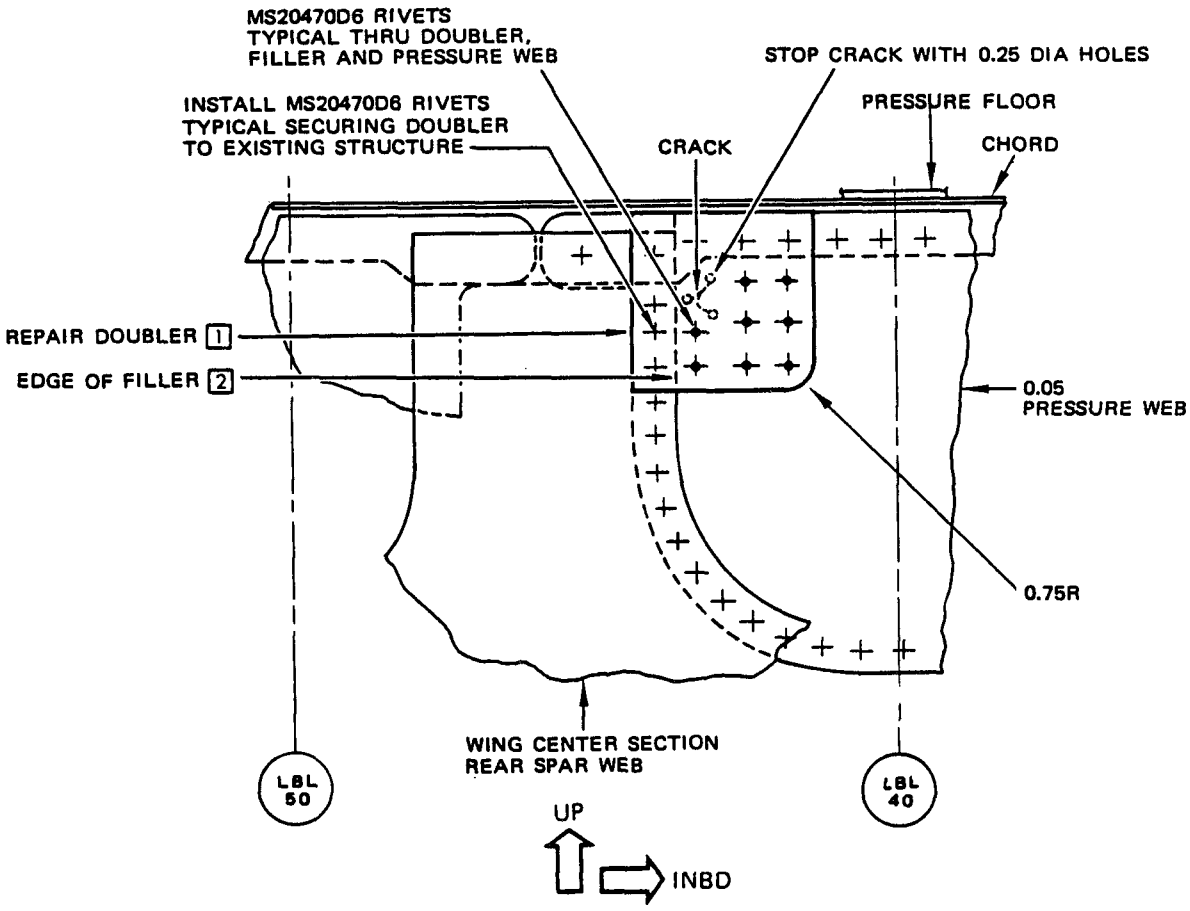

LEFT SIDE AS SHOWN
RIGHT SIDE OPPOSITE

Repair to Cracked Pressure Web - Bulkhead Station 663.75
Figure 4 (Sheet 3)

THIS REPAIR IS OBSOLETE AFTER NOVEMBER 23, 2005.
IT IS REPLACED WITH FIGURE 5A.

"Oil Can" Repair to Pressure Bulkhead at Station 1016
Figure 5

BOEING PROPRIETARY - Copyright © - Unpublished Work - See title page for details.

APPLICABILITY

THIS REPAIR IS APPLICABLE TO AN "OIL CAN" CONDITION THAT IS:

- IN THE WEB OF THE BODY STATION 1016 PRESSURE BULKHEAD AS SHOWN IN DETAIL II, ZONE 1
- BETWEEN THE STRAP AND STIFFENERS

THIS REPAIR IS AN ALTERNATIVE TO SRM 53-10-4 FIGURE 3A WHEN IT IS NOT NECESSARY TO CUT OUT THE PRESSURE BULKHEAD WEB.

THIS REPAIR IS NOT APPLICABLE IF THERE IS NOT SUFFICIENT CLEARANCE BETWEEN THE EDGE OF THE "OIL CAN" CONDITION AND THE STRAPS, STIFFENERS AND DOUBLERS.

THIS REPAIR IS NOT APPLICABLE IF THE DISTANCE BETWEEN THE EDGE OF THE REPAIR PLATE AND THE Y CHORD IS LESS THAN 3.0 INCHES.

USE THIS REPAIR AS PERMITTED OR REQUIRED BY SRM 53-10-1, FIGURE 1

REPAIR INSTRUCTIONS

1. Get access to the damaged area.
2. Put the pressure bulkhead web back to the initial contour with normal hand pressure, as necessary.
3. Make the repair part as given in Table I and as shown in Detail III. The contour of the Part 1 (plate) is to match the initial contour
   - Use a part number 65C37292-8 gore repair section to make the repair plate.
4. Assemble the repair part as shown in Detail III.
5. Drill the fastener holes as shown in Detail III. Refer to SRM 51-30-5 for the fastener hole sizes.

   NOTE: MAKE SURE YOU DO NOT DRILL THE FASTENER HOLES IN THE DAMAGED AREA. THIS WILL PERMIT THE CUTOUT OF THE DAMAGED AREA IF IT IS NECESSARY.
6. Assemble the repair part with temporary bolts.
7. Make an inspection of the repair.
   1) Make sure that the part 1 (plate) keeps the dome web to its initial contour and does not cause creases, wrinkles, or buckles.
      - If the part 1 (plate) keeps the dome web at its initial contour , drill the six fastener holes in the damaged area and continue to do the repair instructions that remain.
      - If the initial contour is not kept or there is more damage, do not drill the six fastener holes in the damaged area. Refer to SRM 53-10-4 Figure 3A for the cutout repair.
8. Disassemble the repair part.
9. Remove all the nicks, scratches, burrs and sharp edges from the repair part and the initial part.
10. Apply a chemical conversion coating to the repair part and to the bare surfaces of the initial part. Refer to SRM 51-10-2.
11. Apply two layers of BMS 10-11 Type I primer to the repair part and to the bare surfaces of the initial part. Refer to SOPM 20-41-02.
12. Install the repair part with BMS 5-95 sealant between the mating surfaces. Refer to SRM 51-20-4.
13. Install the fasteners as shown in Detail III. Refer to SRM 51-30.
14. After the repair has been installed, do the NDT inspections for crack damage to the pressure dome web at the threshold and repeat intervals given in Table II.

"Oil Can" Repair to Aft Pressure Bulkhead Web
Figure 5A (Sheet 1)

BOEING PROPRIETARY - Copyright © - Unpublished Work - See title page for details.

NOTES

- THIS REPAIR IS CATEGORY B. THE CATEGORY B REPAIR HAS FAA APPROVAL IF YOU DO THE SUPPLEMENTAL INSPECTIONS GIVEN IN TABLE II.
- FOR AIRPLANES IDENTIFIED IN THIS SRM, THIS REPAIR HAS BEEN REVIEWED AS REQUIRED BY PARAGRAPH (G) OF AIRWORTHINESS DIRECTIVE (AD) 98-11-04 R1. THE REPAIR IS FOUND NOT TO CREATE A STRUCTURALLY SIGNIFICANT ITEM (SSI) OR AFFECT AN EXISTING SSI IN THE SUPPLEMENTAL STRUCTURAL INSPECTION DOCUMENT (SSID) D6-37089. SSID INSPECTIONS REMAIN EFFECTIVE WITH THIS REPAIR INSTALLED. DO THE EXISTING SSID INSPECTIONS AS GIVEN IN PARAGRAPHS (B) AND (C) OF AD 98-11-04 R1.

  THIS REPAIR:

  - IS NOT APPLICABLE IN AN AREA THAT HAS A STRAP
  - IS NOT APPLICABLE IN AREAS WHERE THERE IS NOT SUFFICIENT CLEARANCE BETWEEN THE EDGE OF THE "OIL CAN" CONDITION AND THE EDGE OF THE PART 1 (PLATE).
  - IS AN ALTERNATIVE TO SRM 53-10-4 FIGURE 3A WHICH CUTS OUT THE DAMAGE.
- THE WIDTH AND DEPTH OF THE OIL CAN DAMAGE MUST BE WITHIN THE LIMITS AS GIVEN IN GRAPH I OF SRM 53-10-1, FIGURE 1, FOR THIS REPAIR TO BE APPLICABLE.
- WHEN YOU USE THIS REPAIR, REFER TO:
  - 737 NDT PART 6, 51-00-00, FOR HIGH FREQUENCY EDDY CURRENT INSPECTION PROCEDURES
  - SOPM 20-41-02 FOR APPLICATION OF FINISHES
  - SRM 51-10-2 FOR PROTECTIVE TREATMENT OF METALLIC AND NON METALLIC MATERIALS
  - SRM 51-20-4 FOR REPAIR SEALING
  - SRM 51-30 FOR FASTENER CODE, REMOVAL AND INSTALLATION, HOLE SIZES AND EDGE MARGINS.

[A] THE DOUBLER AND TRIPLER ARE APPLIED TO AIRPLANES WITH BASIC EFFECTIVITIES P0031-P0899, P9011-P2499, P2831-P3499

FASTENER SYMBOLS

REPAIR FASTENER LOCATION. INSTALL A BACR15FT5D RIVET. AS AN ALTERNATIVE, INSTALL A BACR15BB5D OR AN MS20470D5 RIVET.

REPAIR MATERIAL			
PART NO.	PART	QTY	MATERIAL
1	PLATE	1	USE GORE WEB SECTION, PART NUMBER 65C37292-8

TABLE I

CATEGORY B REPAIR INSPECTION REQUIREMENTS			
INSPECTION THRESHOLD	INSPECTIONS AND REPEAT INTERVALS		
	METHOD	INTERVAL	REFERENCE
25,000 FLIGHT CYCLES FROM THE TIME THE REPAIR IS DONE	HFEC INSPECT THE WEB COMMON TO THE REPAIR PLATE FROM THE AFT SIDE OF THE PRESSURE BULKHEAD (SEE NOTE)	12,000 FLIGHT CYCLES	737 NDT PART 6, 51-00-00, FIGURE 4 OR 23
NOTE: IF CRACK DAMAGE OCCURS THEN CONTACT THE BOEING COMPANY FOR FURTHER REPAIR INSTRUCTIONS.			

TABLE II

"Oil Can" Repair to Aft Pressure Bulkhead Web
Figure 5A (Sheet 2)

BOEING PROPRIETARY - Copyright © - Unpublished Work - See title page for details.

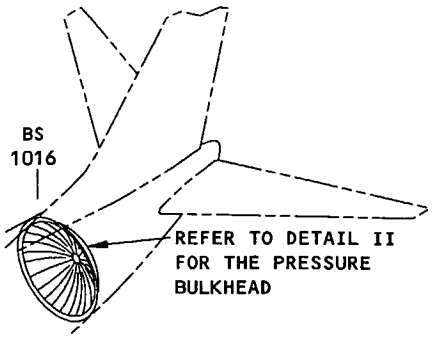

BODY STATION 1016
BULKHEAD LOCATION

DETAIL I

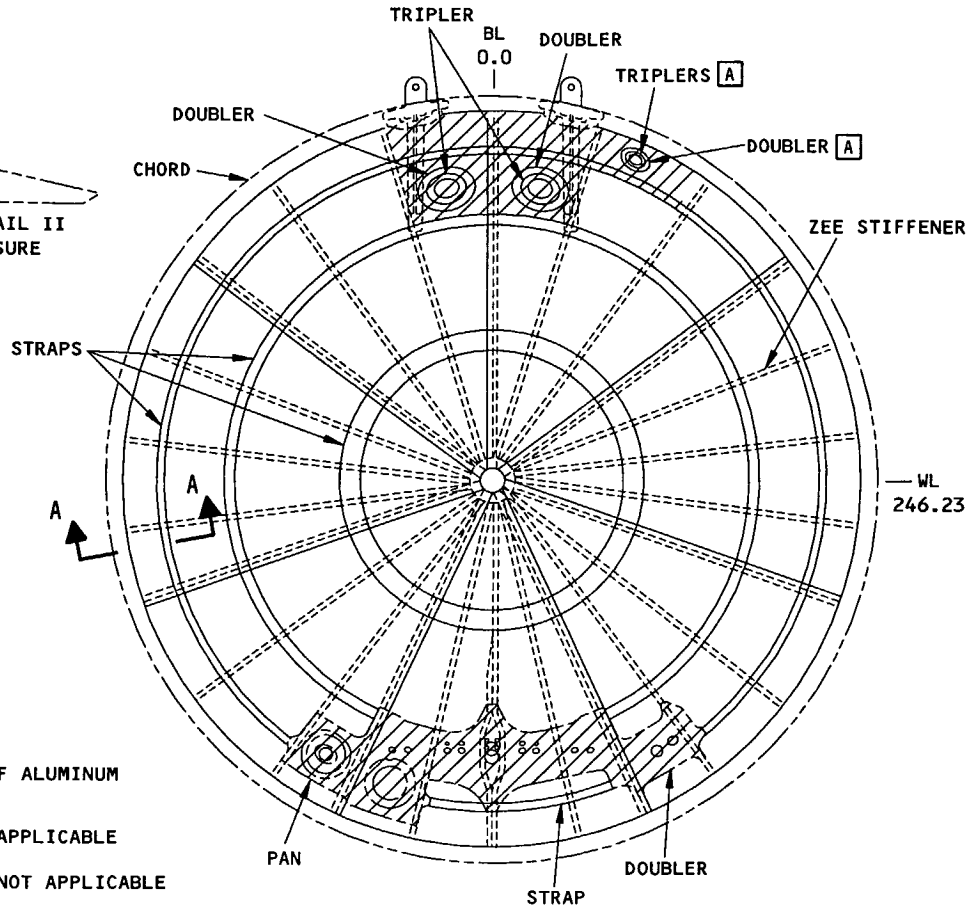

NOTE: ALL PARTS ARE MADE OF ALUMINUM EXCEPT AS NOTED.

ZONE 1 - REPAIR IS APPLICABLE

ZONE 2 - REPAIR IS NOT APPLICABLE

VIEW WHEN YOU LOOK FORWARD

BODY STATION 1016 PRESSURE BULKHEAD
DETAIL II

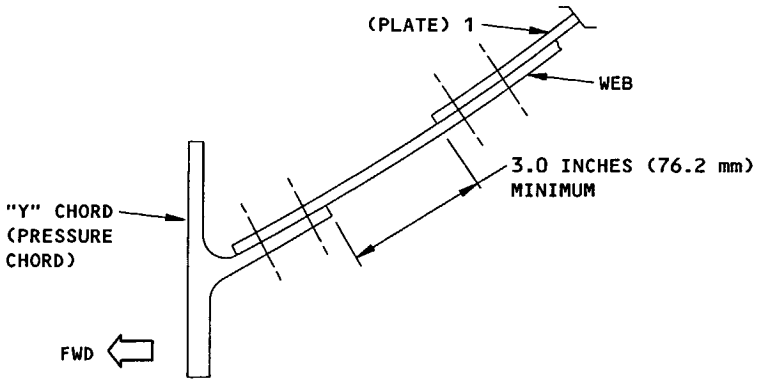

SECTION A-A

"Oil Can" Repair to Aft Pressure Bulkhead Web
Figure 5A (Sheet 3)

BOEING PROPRIETARY - Copyright © - Unpublished Work - See title page for details.

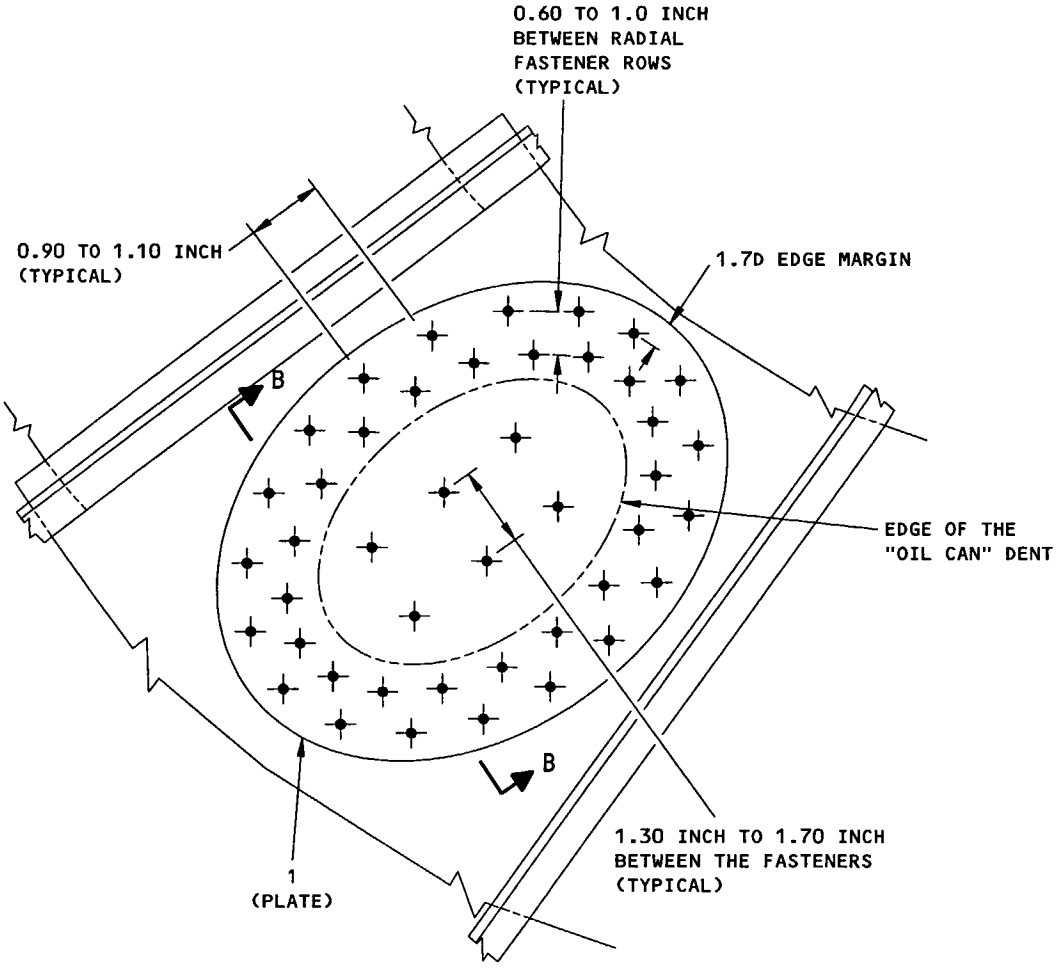

VIEW OF THE REPAIR LOOKING AFT

BODY STATION 1016 PRESSURE BULKHEAD "OIL CAN" REPAIR
DETAIL III

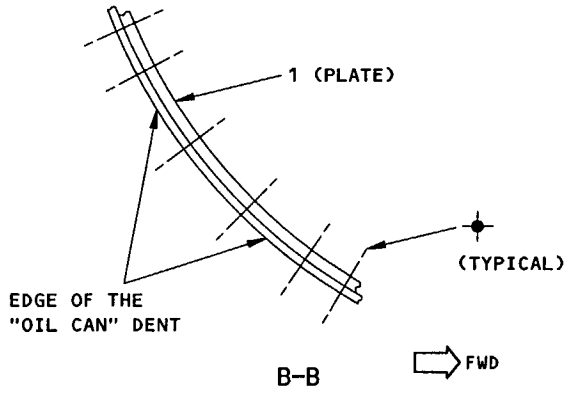

"Oil Can" Repair to Aft Pressure Bulkhead Web
Figure 5A (Sheet 4)

BOEING PROPRIETARY - Copyright © - Unpublished Work - See title page for details.

APPLICABILITY

THIS REPAIR APPLIES TO DAMAGED AREAS OF FRAMES (DAMAGE LIMITED TO AREA BETWEEN REINFORCEMENT ANGLE AND SKIN ATTACHMENT) WHICH ARE ATTACHED TO THE FUSELAGE SKIN. THIS REPAIR APPLIES TO AREAS WHERE SUPPORT CLIPS AND SUPPORT ANGLES, USED TO SUPPORT THE CARGO DECK, ARE ATTACHED TO THE FRAME IN THE VICINITY OF THE DAMAGE.

REPAIR INSTRUCTIONS

1. Remove and repair damaged skin as shown in applicable skin repair in SRM 53-30-3.
2. Remove existing support angle/clip.
3. Cut and remove damaged portion of frame [A]. Cut to allow sufficient edge margin at fastener holes.
4. Make the repair parts (Table I). Bend shear tie 1 per Table II before heat treating.
5. Assemble the repair parts and drill the fastener holes.
6. Remove the repair parts.
7. Break sharp edges of original and repair parts 0.015 R to 0.030 R.
8. Remove all nicks, scratches, burrs, sharp edges and corners from original and repair parts.
9. Apply a protective chemical conversion coating to the repair parts and the cut edges of the original parts per SRM 51-10-2.
10. Apply one coat of BMS 10-11, Type I primer and one coat of BMS 10-11, Type II enamel to repair parts and the cut edges of the original parts as given in SOPM 20-41-02.
11. Install the repair parts making a faying surface seal with BMS 5-95 sealant at all mating surfaces.
12. Restore original finish per AMM 51-21. [D]

NOTES

- THIS REPAIR WILL HAVE AN EFFECT ON THE STRUCTURALLY SIGNIFICANT ITEM (SSI) NUMBER F-33A OR F-34A, BUT THE INSPECTIONS FOR F-33A AND F-34A ARE STILL APPLICABLE. DO THE INSPECTIONS FOR F-33A AND F-34A, IF NECESSARY, AT THE SUBSEQUENT SUPPLEMENTAL STRUCTURAL INSPECTION DOCUMENT (SSID) INSPECTION ON THIS AIRPLANE. REFER TO SRM 51-00-4, FIG. 3 FOR THE APPLICABLE SSI DATA.
- WHEN YOU USE THIS REPAIR, REFER TO:
  - AMM 51-21 FOR INTERIOR AND EXTERIOR FINISHES
  - AMM 51-31 FOR SEALS AND SEALING
  - SOPM 20-41-02 FOR APPLICATION OF CHEMICAL AND SOLVENT RESISTANT FINISHES
  - SRM 51-10-1 FOR INVESTIGATION AND CLEANUP OF DAMAGE
  - SRM 51-10-2 FOR PROTECTIVE TREATMENT OF METAL
  - SRM 51-20-4 FOR SEALING OF REPAIRS
  - SRM 51-30 FOR FASTENER CODE, REMOVAL, INSTALLATION, HOLE SIZES, EDGE MARGINS AND SUBSTITUTION.

[A] FOR DAMAGE OF FRAME WHICH EXTENDS INTO AREA OF ATTACHMENT WITH REINFORCEMENT ANGLE (ALSO AREA OF SUPPORT ANGLE/CLIP), REFER TO FIGURE 7

[B] ORIGINAL FASTENER LOCATION. USE SAME NUMBER, TYPE, AND SIZE FASTENER AS ORIGINAL FASTENER

[C] FOR SHEAR TIE AND FILLER, USE SAME MATERIAL AS FRAME AND ONE GAGE GREATER THAN FRAME. FOR SUPPORT ANGLE/CLIP, USE SAME MATERIAL AND GAGE AS ORIGINAL OR PROCURE PART FROM THE BOEING COMPANY. FOR ALL PARTS USE SAME HEAT TREAT AFTER FORMING AS ORIGINAL

[D] IN BILGE AREAS (BELOW CARGO DECK) APPLY BMS 3-23 TO REPAIR AREA AFTER FINAL FINISH PER 51-10-2

[E] SIMILAR SPACING AS ORIGINAL FASTENER SPACING IN REINFORCEMENT ANGLE. ADJUST SPACING TO AVOID INTERFERENCE WITH SUPPORT ANGLE/CLIP AND TO MAINTAIN EDGE MARGINS

[F] SAME SPACING AS ORIGINAL FASTENER SPACING AT SKIN ATTACHMENT

FASTENER SYMBOLS

ORIGINAL FASTENER LOCATION. USE SAME TYPE AND SIZE FASTENER AS ORIGINAL FASTENER

ORIGINAL FASTENER LOCATION. USE BACR15FT6D RIVET. BACR15BB6D OR MS20470D6 OPTIONAL

REPAIR FASTENER LOCATION. USE BACR15FT6D RIVET. BACR15BB6D OR MS20470D6 OPTIONAL

Frame Repair at Skin Attachment - Repair 1
(Area of Support Angle/Clip)
Figure 6 (Sheet 1)

BOEING PROPRIETARY - Copyright © - Unpublished Work - See title page for details.

REPAIR MATERIAL			
PART		QTY	MATERIAL
1	SHEAR TIE	1	C
2	FILLER	1	C
3	SUPPORT ANGLE/CLIP	1	C
4	RADIUS FILLER	1	0.063 7075-T6 SEE DETAIL I

LIST OF REPAIR MATERIALS
FOR DETAIL II
TABLE I

SHEAR TIE 1 GAGE	ALLOY 7075-0
0.045	0.09
0.050	0.09
0.056	0.12
0.063	0.12
0.071	0.12

INSIDE BEND RADII
ROOM TEMPERATURE FORMING
TABLE II

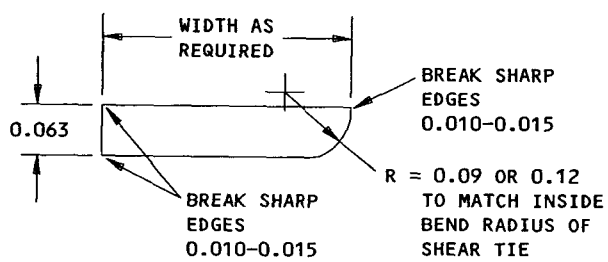

DETAIL I

Frame Repair at Skin Attachment - Repair 1
(Area of Support Angle/Clip)
Figure 6 (Sheet 2)

BOEING PROPRIETARY - Copyright © - Unpublished Work - See title page for details.

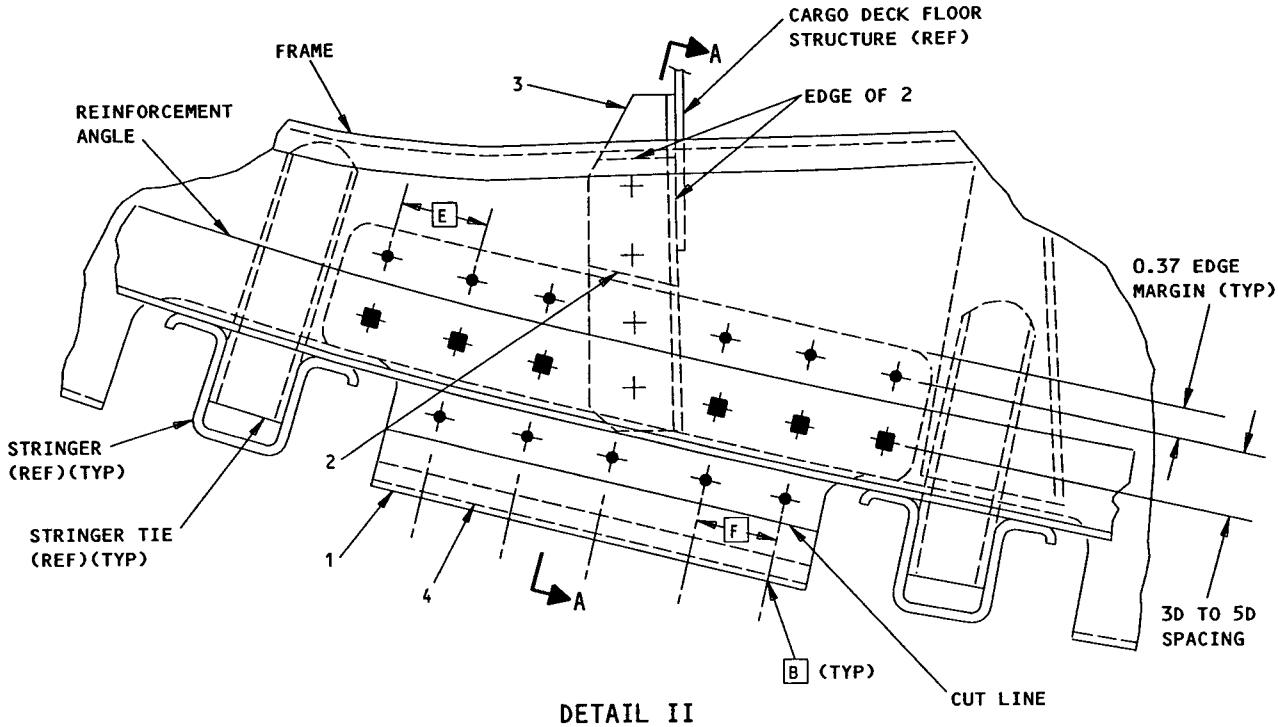

DETAIL II

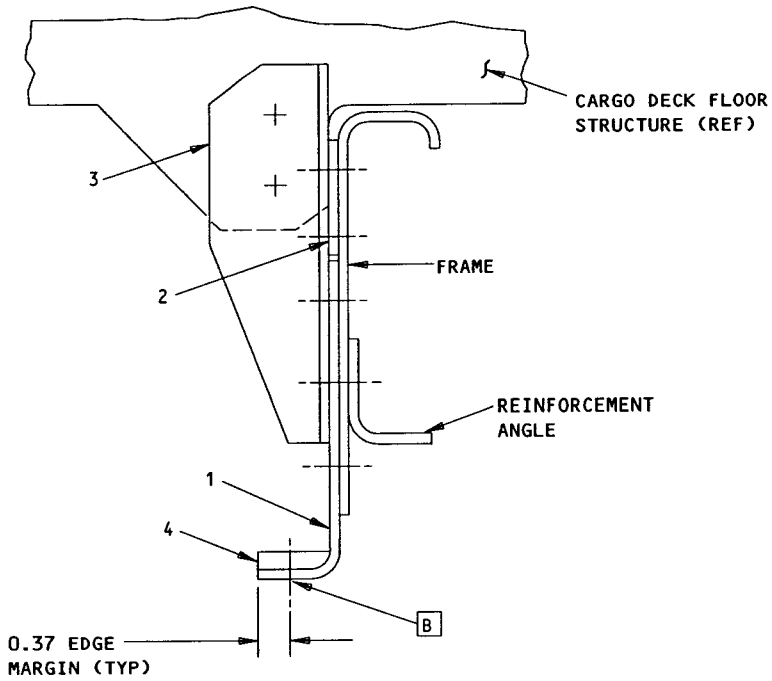

SECTION A-A

Frame Repair at Skin Attachment - Repair 1
(Area of Support Angle/Clip)
Figure 6 (Sheet 3)

BOEING PROPRIETARY - Copyright © - Unpublished Work - See title page for details.

APPLICABILITY

THIS REPAIR APPLIES TO DAMAGED AREAS OF FRAMES (DAMAGE EXTENDING FROM SKIN ATTACHMENT TO AREA OF ATTACHMENT WITH REINFORCEMENT ANGLE) WHICH ARE ATTACHED TO THE FUSELAGE SKIN. THIS REPAIR APPLIES TO AREAS WHERE SUPPORT CLIPS AND SUPPORT ANGLES, USED TO SUPPORT THE CARGO DECK STRUCTURE, ARE ATTACHED TO THE FRAME IN THE VICINITY OF THE DAMAGE.

REPAIR INSTRUCTIONS

1. Remove and repair damaged skin as shown in applicable skin repair in SRM 53-30-3.
2. Remove existing support angle/clip.
3. Cut and remove damaged portion of frame [A]. Cut to allow sufficient edge margin at fastener holes.
4. Make the repair parts (Table I). Bend shear tie 1 per Table II before heat treating.
5. Assemble the repair parts and drill the fastener holes.
6. Remove the repair parts.
7. Break sharp edges of original and repair parts 0.015 R to 0.030 R.
8. Remove all nicks, scratches, burrs, sharp edges and corners from original and repair parts.
9. Apply a protective chemical conversion coating to the repair parts and the cut edges of the original parts per SRM 51-10-2.
10. Apply one coat of BMS 10-11, Type I primer and one coat of BMS 10-11, Type II enamel to repair parts and the cut edges of the original parts as given in SOPM 20-41-02.
11. Install the repair parts making a faying surface seal with BMS 5-95 sealant at all mating surfaces.
12. Restore original finish per AMM 51-21. [D]

NOTES

- THIS REPAIR WILL HAVE AN EFFECT ON THE STRUCTURALLY SIGNIFICANT ITEM (SSI) NUMBER F-33A OR F-34A, BUT THE INSPECTIONS FOR F-33A AND F-34A ARE STILL APPLICABLE. DO THE INSPECTIONS FOR F-33A AND F-34A, IF NECESSARY, AT THE SUBSEQUENT SUPPLEMENTAL STRUCTURAL INSPECTION DOCUMENT (SSID) INSPECTION ON THIS AIRPLANE. REFER TO SRM 51-00-4, FIG. 3 FOR THE APPLICABLE SSI DATA.
- WHEN YOU USE THIS REPAIR, REFER TO:
  - AMM 51-21 FOR INTERIOR AND EXTERIOR FINISHES
  - AMM 51-31 FOR SEALS AND SEALING
  - SOPM 20-41-02 FOR APPLICATION OF CHEMICAL AND SOLVENT RESISTANT FINISHES
  - SRM 51-10-1 FOR INVESTIGATION AND CLEANUP OF DAMAGE
  - SRM 51-10-2 FOR PROTECTIVE TREATMENT OF METAL
  - SRM 51-20-4 FOR SEALING OF REPAIRS
  - SRM 51-30 FOR FASTENER CODE, REMOVAL, INSTALLATION, HOLE SIZES, EDGE MARGINS AND SUBSTITUTION.

[A] FOR DAMAGE OF FRAME WHICH IS LIMITED TO AREA BETWEEN REINFORCEMENT ANGLE AND SKIN ATTACHMENT, REFER TO FIGURE 6

[B] ORIGINAL FASTENER LOCATION. USE SAME NUMBER, TYPE, AND SIZE FASTENER AS ORIGINAL FASTENER

[C] FOR SHEAR TIE AND FILLER 3, USE SAME MATERIAL AS FRAME AND ONE GAGE GREATER THAN FRAME. FOR FILLER 2, USE SAME MATERIAL AND GAGE AS FRAME. FOR SUPPORT ANGLE/CLIP, USE SAME MATERIAL AND GAGE AS ORIGINAL OR PROCURE PART FROM THE BOEING COMPANY. FOR ALL PARTS USE SAME HEAT TREAT AFTER FORMING AS ORIGINAL

[D] IN BILGE AREAS (BELOW CARGO DECK) APPLY BMS 3-23 TO REPAIR AREA AFTER FINAL FINISH PER 51-10-2

[E] SIMILAR SPACING AS ORIGINAL FASTENER SPACING IN REINFORCEMENT ANGLE. ADJUST SPACING TO AVOID INTERFERENCE WITH SUPPORT ANGLE/CLIP AND TO MAINTAIN EDGE MARGINS

FASTENER SYMBOLS

ORIGINAL FASTENER LOCATION. USE SAME TYPE AND SIZE FASTENER AS ORIGINAL FASTENER

ORIGINAL FASTENER LOCATION. USE BACR15FT6D RIVET. BACR15BB6D OR MS20470D6 OPTIONAL

REPAIR FASTENER LOCATION. USE BACR15FT6D RIVET. BACR15BB6D OR MS20470D6 OPTIONAL

Frame Repair at Skin Attachment - Repair 2
(Area of Support Angle/Clip)
Figure 7 (Sheet 1)

BOEING PROPRIETARY - Copyright © - Unpublished Work - See title page for details.

REPAIR MATERIAL			
PART		QTY	MATERIAL
1	SHEAR TIE	1	C
2	FILLER	1	C
3	FILLER	1	C
4	SUPPORT ANGLE/CLIP	1	C
5	RADIUS FILLER	1	0.063 7075-T6 SEE DETAIL I

LIST OF REPAIR MATERIALS
FOR DETAIL II
TABLE I

SHEAR TIE 1 GAGE	ALLOY 7075-0
0.045	0.09
0.050	0.09
0.056	0.12
0.063	0.12
0.071	0.12

INSIDE BEND RADII
ROOM TEMPERATURE FORMING
TABLE II

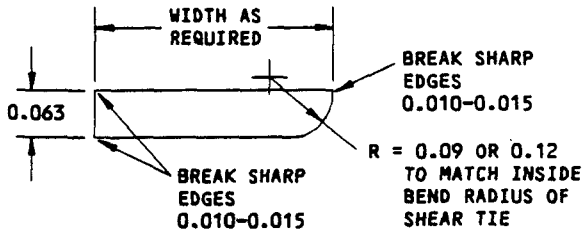

DETAIL I

Frame Repair at Skin Attachment - Repair 2
(Area of Support Angle/Clip)
Figure 7 (Sheet 2)

332565

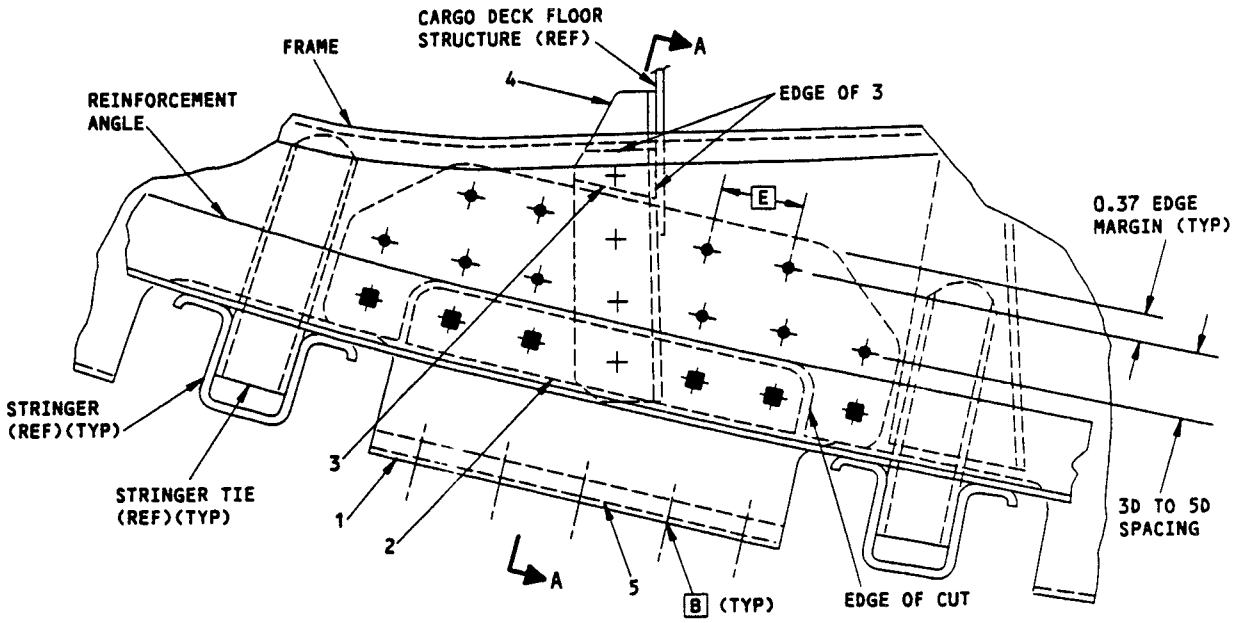

DETAIL II

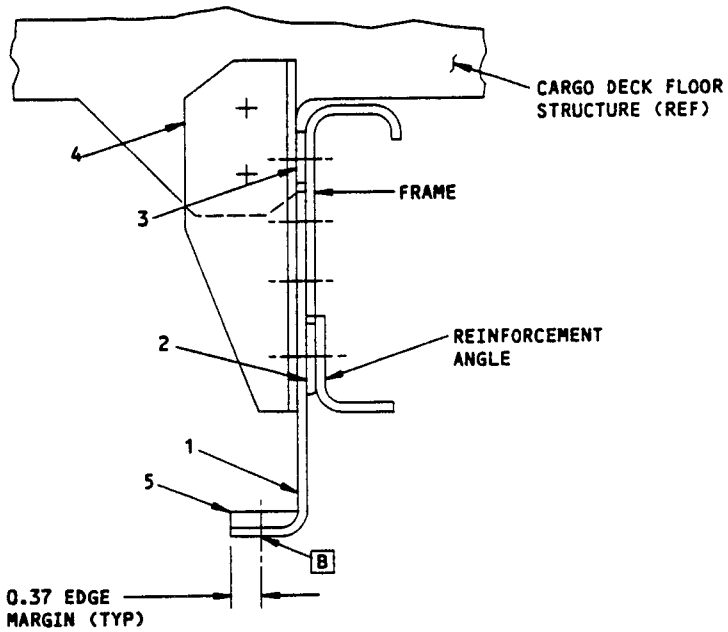

SECTION A-A

Frame Repair at Skin Attachment - Repair 2
(Area of Support Angle/Clip)
Figure 7 (Sheet 3)

332566

APPLICABILITY

THIS REPAIR APPLIES TO DAMAGED SHEAR TIES (WHICH ARE ATTACHED TO THE FRAME AND FUSELAGE SKIN) AND FRAME (DAMAGE LIMITED TO AREA BETWEEN REINFORCEMENT ANGLE AND SHEAR TIE ATTACHMENT).

REPAIR INSTRUCTIONS

1. Remove and repair damaged skin as shown in applicable skin repair in SRM 53-30-3.
2. Remove damaged shear tie.
3. Cut and remove damaged portion of frame [A]. Cut to allow sufficient edge margin at fastener holes.
4. Make the repair parts (Table I). If making shear tie 1 is required, bend shear tie per Table II before heat treating.
5. Assemble the repair parts and drill the fastener holes.
6. Remove the repair parts.
7. Break sharp edges of original and repair parts 0.015 R to 0.030 R.
8. Remove all nicks, scratches, burrs, sharp edges and corners from original and repair parts.
9. Apply a protective chemical conversion coating to the repair parts and the cut edges of the original parts per SRM 51-10-2.
10. Apply one coat of BMS 10-11, Type I primer (and for repairs below passenger floor, also apply one coat BMS 10-11, Type II enamel) to repair parts and the cut edges of the original parts as given in SOPM 20-41-02.
11. Install the repair parts making a faying surface seal with BMS 5-95 sealant at all mating surfaces.
12. Restore original finish per AMM 51-21. [D]

NOTES

- THIS REPAIR WILL HAVE AN EFFECT ON THE STRUCTURALLY SIGNIFICANT ITEM (SSI) NUMBER F-33 OR F-34; BUT, THE INSPECTIONS FOR F-33A THRU C AND F-34A THRU C ARE STILL APPLICABLE. DO THE INSPECTIONS FOR F-33A THRU C AND F-34A THRU C, IF NECESSARY, AT THE SUBSEQUENT SUPPLEMENTAL STRUCTURAL INSPECTION DOCUMENT (SSID) INSPECTION ON THIS AIRPLANE. REFER TO SRM 51-00-4, FIG. 3 FOR THE APPLICABLE SSI DATA.
- WHEN YOU USE THIS REPAIR, REFER TO:
  - AMM 51-21 FOR INTERIOR AND EXTERIOR FINISHES
  - AMM 51-31 FOR SEALS AND SEALING
  - SOPM 20-41-02 FOR APPLICATION OF CHEMICAL AND SOLVENT RESISTANT FINISHES
  - SRM 51-10-1 FOR INVESTIGATION AND CLEANUP OF DAMAGE
  - SRM 51-10-2 FOR PROTECTIVE TREATMENT OF METAL
  - SRM 51-20-4 FOR SEALING OF REPAIRS
  - SRM 51-30 FOR FASTENER CODE, REMOVAL, INSTALLATION, HOLE SIZES, EDGE MARGINS AND SUBSTITUTION.

[A] FOR REPAIR OF DAMAGED SHEAR TIE AND FRAME WHERE DAMAGE EXTENDS INTO AREA OF ATTACHMENT WITH REINFORCEMENT ANGLE, REFER TO FIGURE 9

[B] ORIGINAL FASTENER LOCATION. USE SAME NUMBER, TYPE, AND SIZE FASTENER AS ORIGINAL FASTENER

[C] FOR SHEAR TIE, USE SAME MATERIAL, HEAT TREAT AFTER FORMING AND GAGE AS ORIGINAL OR PROCURE PART FROM THE BOEING COMPANY. FOR DOUBLER, USE SAME MATERIAL AND HEAT TREAT AS FRAME AND ONE GAGE GREATER THAN FRAME

[D] IN BILGE AREAS (BELOW CARGO DECK) APPLY BMS 3-23 TO REPAIR AREA AFTER FINAL FINISH PER SRM 51-10-2

[E] SAME SPACING AS ORIGINAL FASTENER SPACING IN REINFORCEMENT ANGLE

FASTENER SYMBOLS

┼ ORIGINAL FASTENER LOCATION. USE SAME NUMBER, TYPE, AND SIZE FASTENER AS ORIGINAL FASTENER

┼● REPAIR FASTENER LOCATION. USE BACR15FT6D RIVET. BACR15BB6D OR MS20470D6 OPTIONAL

┼▲ ORIGINAL FASTENER LOCATION USE BACR15FT6D RIVET. BACR15BB6D OR MS20470D6 OPTIONAL

Shear Tie Repair at Skin Attachment - Repair 1
Figure 8 (Sheet 1)

BOEING PROPRIETARY - Copyright © - Unpublished Work - See title page for details.

REPAIR MATERIAL			
PART		QTY	MATERIAL
1	SHEAR TIE	1	C
2	DOUBLER	1	C
3	RADIUS FILLER	1	0.063 7075-T6 SEE DETAIL I

LIST OF REPAIR MATERIALS
FOR DETAIL II
TABLE I

SHEAR TIE 1 GAGE	ALLOY
	7075-0
0.045	0.09
0.050	0.09
0.056	0.12
0.063	0.12
0.071	0.12

INSIDE BEND RADII
ROOM TEMPERATURE FORMING
TABLE II

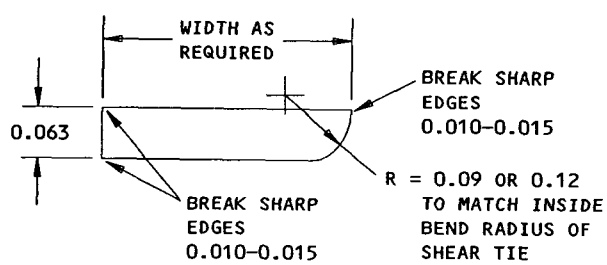

DETAIL I

Shear Tie Repair at Skin Attachment - Repair 1
Figure 8 (Sheet 2)

BOEING PROPRIETARY - Copyright © - Unpublished Work - See title page for details.

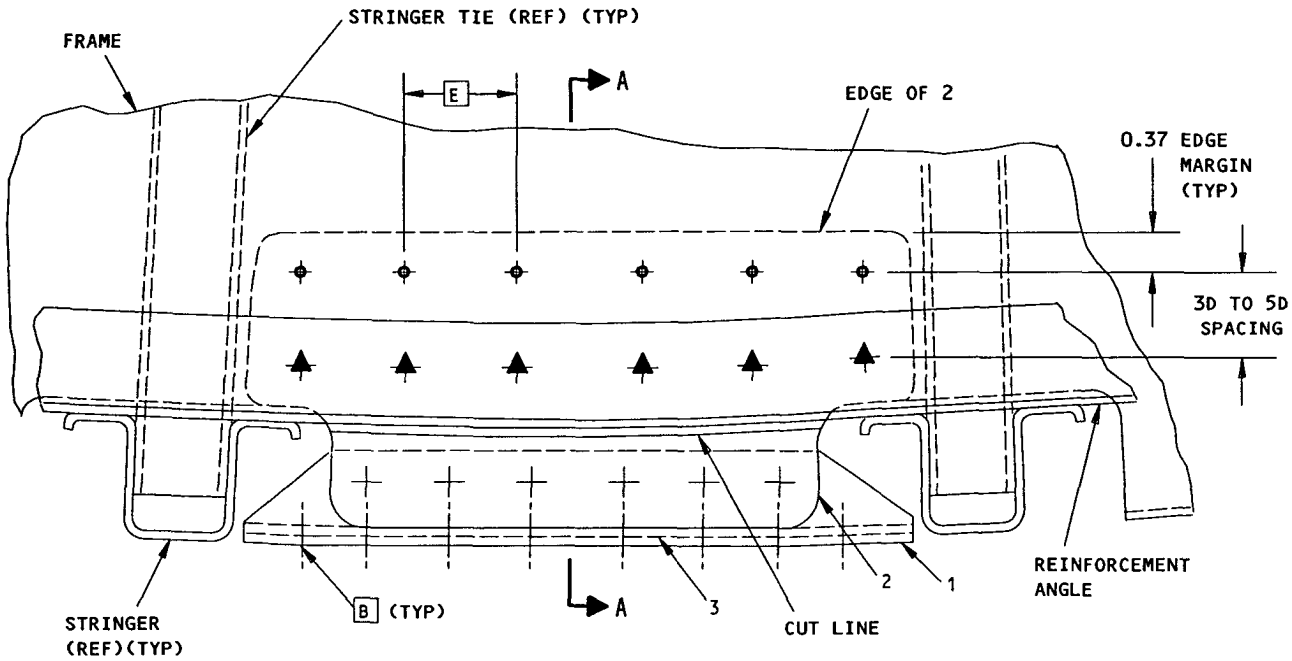

DETAIL II

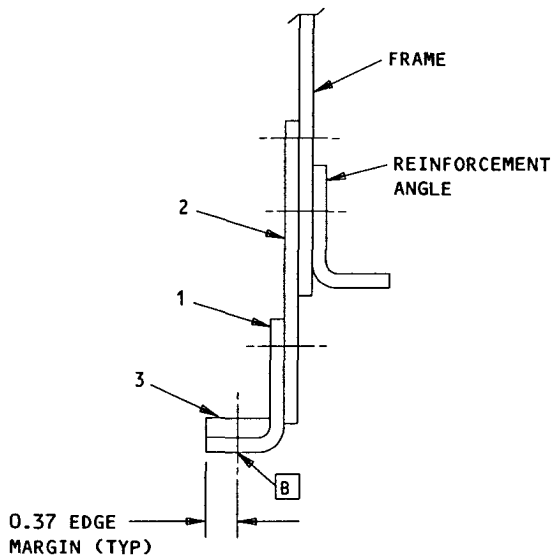

SECTION A-A

Shear Tie Repair at Skin Attachment - Repair 1
Figure 8 (Sheet 3)

BOEING PROPRIETARY - Copyright © - Unpublished Work - See title page for details.

APPLICABILITY

THIS REPAIR APPLIES TO DAMAGED SHEAR TIES (WHICH ARE ATTACHED TO THE FRAME AND FUSELAGE SKIN) AND FRAME (DAMAGE EXTENDING TO AREA OF ATTACHMENT WITH REINFORCEMENT ANGLE).

REPAIR INSTRUCTIONS

1. Remove and repair damaged skin as shown in applicable skin repair in SRM 53-30-3.
2. Remove damaged shear tie.
3. Cut and remove damaged portion of frame [A]. Cut to allow sufficient edge margin at fastener holes.
4. Make the repair parts (Table I). If making shear tie 1 is required, bend shear tie per Table II before heat treating.
5. Assemble the repair parts and drill the fastener holes.
6. Remove the repair parts.
7. Break sharp edges of original and repair parts 0.015 R to 0.030 R.
8. Remove all nicks, scratches, burrs, sharp edges and corners from original and repair parts.
9. Apply a protective chemical conversion coating to the repair parts and the cut edges of the original parts per SRM 51-10-2.
10. Apply one coat of BMS 10-11, Type I primer (and for repairs below passenger floor, also apply one coat BMS 10-11, Type II enamel) to repair parts and the cut edges of the original parts as given in SOPM 20-41-02.
11. Install the repair parts making a faying surface seal with BMS 5-95 sealant at all mating surfaces.
12. Restore original finish per AMM 51-21. [D]

NOTES

- THIS REPAIR WILL HAVE AN EFFECT ON THE STRUCTURALLY SIGNIFICANT ITEM (SSI) NUMBER F-33 OR F-34; BUT, THE INSPECTIONS FOR F-33A THRU C, AND F-34A THRU C ARE STILL APPLICABLE. DO THE INSPECTIONS FOR F-33A THRU C, AND F-34A THRU C, IF NECESSARY, AT THE SUBSEQUENT SUPPLEMENTAL STRUCTURAL INSPECTION DOCUMENT (SSID) INSPECTION ON THIS AIRPLANE. REFER TO SRM 51-00-4, FIG. 3 FOR THE APPLICABLE SSI DATA.
- WHEN YOU USE THIS REPAIR, REFER TO:
  - AMM 51-21 FOR INTERIOR AND EXTERIOR FINISHES
  - AMM 51-31 FOR SEALS AND SEALING
  - SRM 51-10-1 FOR INVESTIGATION AND CLEANUP OF DAMAGE
  - SRM 51-10-2 FOR PROTECTIVE TREATMENT OF METAL
  - SRM 51-20-4 FOR SEALING OF REPAIRS
  - SRM 51-30 FOR FASTENER CODE, REMOVAL, INSTALLATION, HOLE SIZES, EDGE MARGINS AND SUBSTITUTION.

[A] FOR REPAIR OF DAMAGED SHEAR TIE AND FRAME WHERE DAMAGE IS LIMITED TO AREA BETWEEN REINFORCEMENT ANGLE AND SKIN ATTACHMENT, REFER TO FIGURE 8

[B] ORIGINAL FASTENER LOCATION. USE SAME NUMBER, TYPE, AND SIZE FASTENER AS ORIGINAL FASTENER

[C] FOR SHEAR TIE, USE SAME MATERIAL, HEAT TREAT AFTER FORMING AND GAGE AS ORIGINAL OR PROCURE PART FROM THE BOEING COMPANY. FOR FILLER, USE SAME MATERIAL AND GAGE AS FRAME. FOR DOUBLER, USE SAME MATERIAL AND HEAT TREAT AS FRAME AND ONE GAGE GREATER THAN FRAME

[D] IN BILGE AREAS (BELOW CARGO DECK), APPLY BMS 3-23 TO REPAIR AREA AFTER FINAL FINISH PER SRM 51-10-2

[E] SIMILAR SPACING AS ORIGINAL FASTENER SPACING IN REINFORCEMENT ANGLE

FASTENER SYMBOLS

+ ORIGINAL FASTENER LOCATION. USE BACR15FT6D RIVET. BACR15BB6D OR MS20470D6 OPTIONAL

-●- REPAIR FASTENER LOCATION. USE BACR15FT6D RIVET. BACR15BB6D OR MS20470D6 OPTIONAL

Shear Tie Repair at Skin Attachment - Repair 2
Figure 9 (Sheet 1)

BOEING PROPRIETARY - Copyright © - Unpublished Work - See title page for details.

REPAIR MATERIAL			
PART		QTY	MATERIAL
1	SHEAR TIE	1	C
2	DOUBLER	1	C
3	FILLER	1	C
4	RADIUS FILLER	1	0.063 7075-T6 SEE DETAIL I

LIST OF REPAIR MATERIALS
FOR DETAIL II
TABLE I

SHEAR TIE 1 GAGE	ALLOY 7075-0
0.045	0.09
0.050	0.09
0.056	0.12
0.063	0.12
0.071	0.12

INSIDE BEND RADII
ROOM TEMPERATURE FORMING
TABLE II

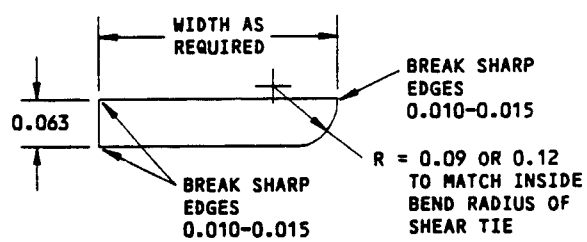

DETAIL I

Shear Tie Repair at Skin Attachment - Repair 2
Figure 9 (Sheet 2)

332572

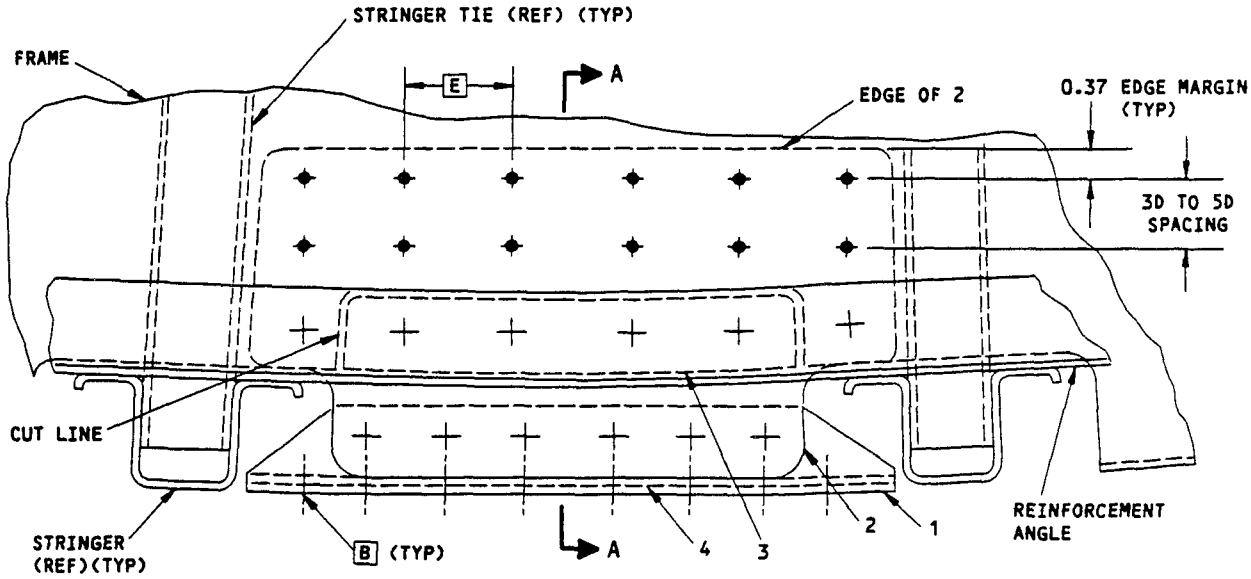

DETAIL II

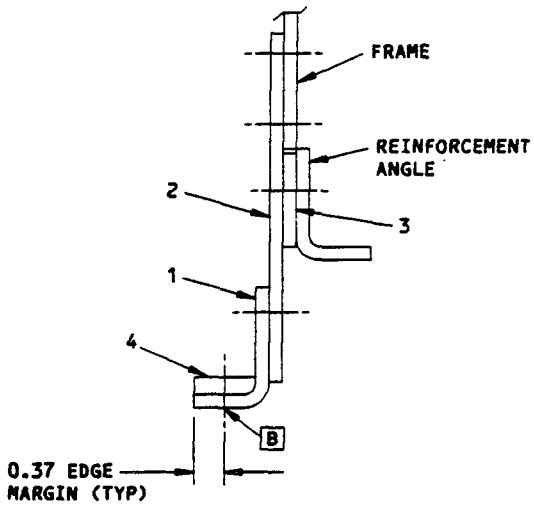

SECTION A-A

Shear Tie Repair at Skin Attachment - Repair 2
Figure 9 (Sheet 3)

332573

APPLICABILITY

THIS REPAIR IS APPLICABLE TO FRAMES THAT ARE ATTACHED TO THE SKIN BETWEEN STRINGERS S-26R AND S-26L. THE REPAIR IS APPLICABLE IF THE DAMAGE IS BETWEEN THE REINFORCEMENT ANGLE AND THE LOCATION WHERE THE FRAME IS ATTACHED TO THE SKIN.

REPAIR INSTRUCTIONS

1. Get access to the damaged area.
2. Do a high frequency eddy current inspection. Inspect the countersinks at the location where the frame is attached to the skin. Refer to NDT, Part 6, 53-30-00. As an alternative, do a 10x visual inspection.
3. Remove and repair the damaged part of the skin. Refer to SRM 53-30-3.
4. Cut and remove the damaged part of the frame. Keep a sufficient edge margin at the fastener holes.
5. Make the repair parts. See Table I. Form the shear tie (Part 1) at room temperature. When you form the shear tie (Part 1), refer to Table II for the minimum bend radii.
6. Assemble the repair parts and then drill the fastener holes.
7. Disassemble the repair parts.
8. Remove the nicks, scratches, gouges, burrs, and sharp edges from the repair parts and the frame.
9. Apply a chemical conversion coating to the repair parts and to the bare surfaces of the frame. Refer to SRM 51-10-2.
10. Apply one layer of BMS 10-11, Type I primer to the repair parts and the bare parts and to the bare surfaces of the frame. As an option you can apply two layers of BMS 10-11, Type I primer to the repair parts and to the bare surfaces of the frame. Refer to SOPM 20-41-02.
11. Install the repair parts with BMS 5-95 sealant between the mating surfaces.
12. Install the fasteners. Fasteners that are made of aluminum must be installed wet with BMS 5-95 sealant.
13. Apply one layer of BMS 10-11, Type II enamel to the repair area. Refer to SOPM 20-41-02.
14. Apply a layer of BMS 3-23 corrosion inhibiting compound to the repair area that is below the cargo deck. Refer to SRM 51-10-2.

NOTES

- THIS REPAIR WILL HAVE AN EFFECT ON THE STRUCTURALLY SIGNIFICANT ITEM (SSI) NUMBER F-33 OR F-34; BUT, THE INSPECTIONS FOR F-33A AND F-34A ARE STILL APPLICABLE. DO THE INSPECTIONS FOR F-33A AND F-34A, IF NECESSARY, AT THE SUBSEQUENT SUPPLEMENTAL STRUCTURAL INSPECTION DOCUMENT (SSID) INSPECTION ON THIS AIRPLANE. REFER TO SRM 51-00-4, FIG. 3 FOR THE APPLICABLE SSI DATA.
- D = FASTENER DIAMETER
- WHEN YOU USE THIS REPAIR REFER TO:
  - SOPM 20-41-02 FOR APPLICATION OF FINISHES
  - SRM 51-10-1 FOR INVESTIGATION AND CLEANUP OF DAMAGE
  - SRM 51-10-2 FOR PROTECTIVE TREATMENT OF METALLIC MATERIALS
  - SRM 51-20-4 FOR REPAIR SEALING
  - SRM 51-30 FOR FASTENER CODE, INSTALLATION AND REMOVAL, HOLE SIZES, AND EDGE MARGINS
  - SRM 53-30-3 FOR FUSELAGE DAMAGE AND REPAIR PROCEDURES

[A] FORM IN THE O CONDITION. HEAT TREAT TO THE SAME CONDITION AS THE FRAME.

[B] MAKE THE DISTANCE BETWEEN THE FASTENERS THE SAME AS THE DISTANCE BETWEEN THE INITIAL FASTENERS IN THE REINFORCEMENT ANGLE.

[C] MAKE THE DISTANCE BETWEEN THE FASTENERS THE SAME AS THE DISTANCE BETWEEN THE INITIAL FASTENERS AT THE LOCATION WHERE THE FRAME IS ATTACHED TO THE SKIN.

[D] USE A RADIUS FILLER IF THERE IS NOT SUFFICIENT CLEARANCE BETWEEN THE HEAD OF THE RIVET AND THE RADIUS OF THE SHEAR TIE. SEE DETAIL II.

Shear Tie Repair at Skin Attachment - Repair 3
Figure 9A (Sheet 1)

BOEING PROPRIETARY - Copyright © - Unpublished Work - See title page for details.

FASTENER SYMBOLS

- INITIAL FASTENER LOCATION. INSTALL A FASTENER THAT IS THE SAME TYPE AND DIMENSIONS AS THE INITIAL FASTENER.
- REPAIR FASTENER LOCATION. INSTALL A FASTENER AS GIVEN IN TABLE III.
- REPAIR FASTENER LOCATION. INSTALL A FASTENER THAT IS THE SAME TYPE AND DIMENSIONS AS THE INITIAL FASTENERS IN THE REINFORCEMENT ANGLE.

REPAIR MATERIAL			
PART		QTY	MATERIAL
1	SHEAR TIE	1	USE ONE GAGE THICKER THAN THE FRAME. USE THE SAME MATERIAL AS THE FRAME [A]
2	RADIUS FILLER	AS NECESSARY	0.063 7075-T6 [D]

TABLE I

PART 1 SHEAR TIE GAGE	MINIMUM BEND RADII FOR 7075-O
0.045	0.09
0.050	0.09
0.056	0.12
0.063	0.12
0.071	0.12

TABLE II

REPAIR FASTENERS	
FRAME THICKNESS (INCH)	REPAIR FASTENER
UP TO 0.056	INSTALL A BACR15FT6D RIVET. IT IS OPTIONAL TO INSTALL A BACR15BB6D RIVET OR A MS20470D6 RIVET.
0.063 AND 0.071	INSTALL A BACR15FT7D RIVET. IT IS OPTIONAL TO INSTALL A BACR15BB7D RIVET OR A MS20470D7 RIVET.

TABLE III

Shear Tie Repair at Skin Attachment - Repair 3
Figure 9A (Sheet 2)

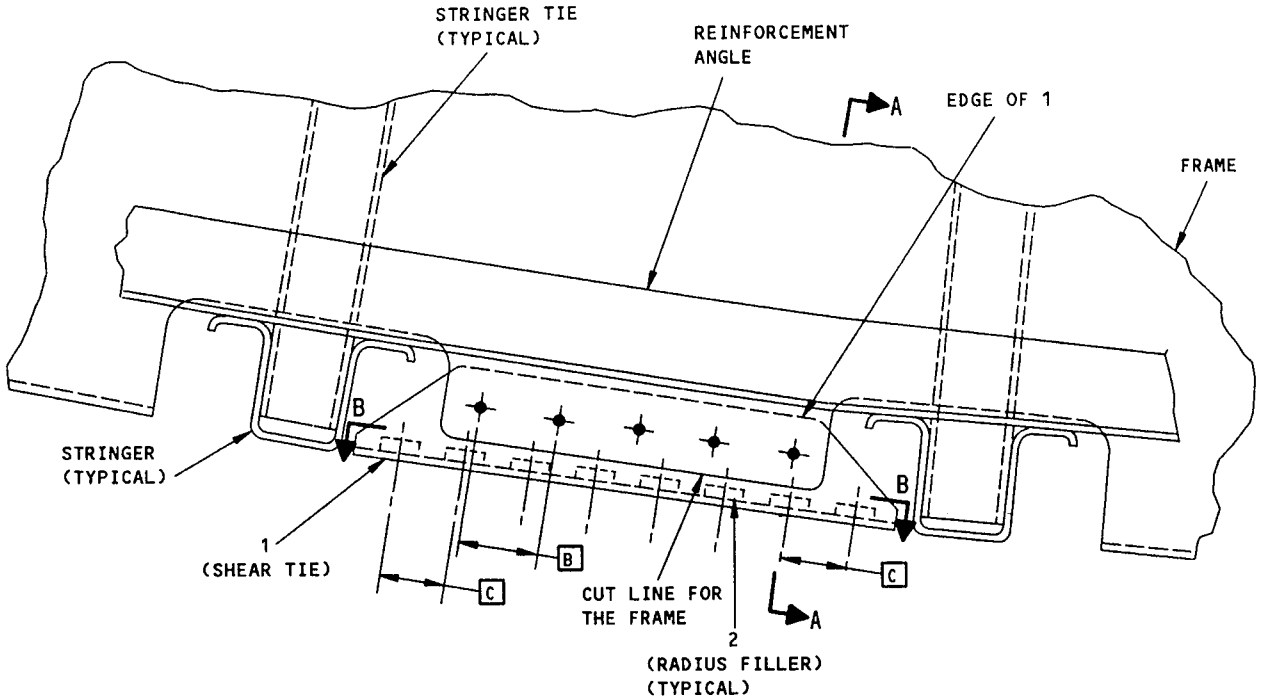

DETAIL I

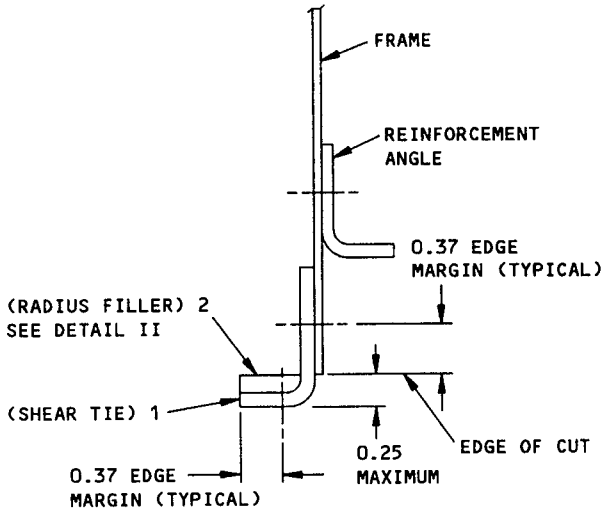

SECTION A-A

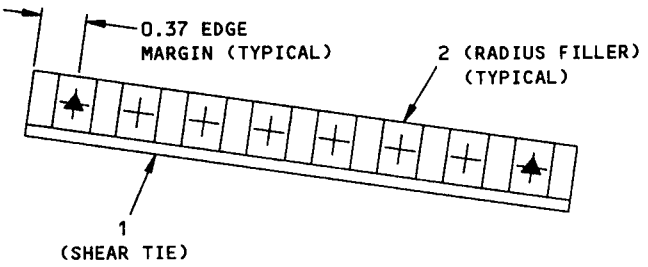

SECTION B-B

Shear Tie Repair at Skin Attachment - Repair 3
Figure 9A (Sheet 3)

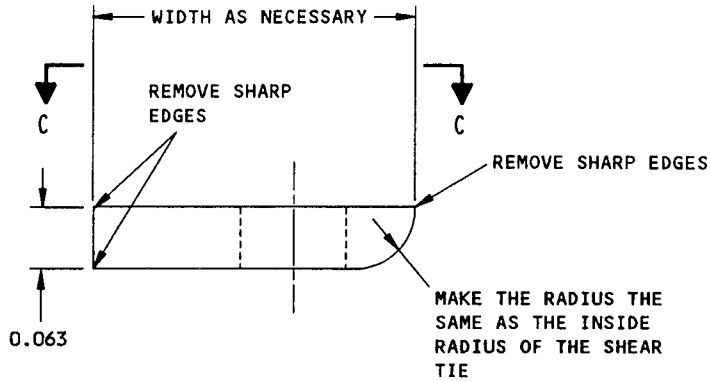

PART 2 RADIUS FILLER
DETAIL II

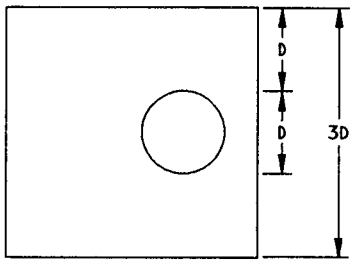

SECTION C-C

Shear Tie Repair at Skin Attachment - Repair 3
Figure 9A (Sheet 4)

APPLICABILITY

THIS REPAIR APPLIES TO DAMAGED AREAS OF FRAMES (DAMAGE LIMITED TO AREA BETWEEN REINFORCEMENT ANGLE AND SKIN ATTACHMENT) WHICH ARE ATTACHED TO THE FUSELAGE SKIN.

REPAIR INSTRUCTIONS

1. Remove and repair damaged skin as shown in applicable skin repair in SRM 53-30-3.
2. Cut and remove damaged portion of frame [A]. Cut to allow sufficient edge margin at fastener holes.
3. Make the repair parts (Table I). Bend shear tie 1 per Table II before heat treating
4. Assemble the repair parts and drill the fastener holes.
5. Remove the repair parts.
6. Break sharp edges of original and repair parts 0.015 R to 0.030 R.
7. Remove all nicks, scratches, burrs, sharp edges and corners from original and repair parts.
8. Apply a protective chemical conversion coating to the repair parts and the cut edges of the original parts per SRM 51-10-2.
9. Apply one coat of BMS 10-11, Type I primer (and for repairs below the passenger floor, also apply one coat of BMS 10-11, Type II enamel) to repair parts and the cut edges of the original parts as given in SOPM 20-41-02.
10. Install the repair parts making a faying surface seal with BMS 5-95 sealant at all mating surfaces.
11. Restore original finish per AMM 51-21. [D]

NOTES

- THIS REPAIR WILL HAVE AN EFFECT ON THE STRUCTURALLY SIGNIFICANT ITEM (SSI) NUMBER F-33 OR F-34; BUT, THE INSPECTIONS FOR F-33A THRU C AND F-34A THRU C ARE STILL APPLICABLE. DO THE INSPECTIONS FOR F-33A THRU C AND F-34A THRU C, IF NECESSARY, AT THE SUBSEQUENT SUPPLEMENTAL STRUCTURAL INSPECTION DOCUMENT (SSID) INSPECTION ON THIS AIRPLANE. REFER TO SRM 51-00-4, FIG. 3 FOR THE APPLICABLE SSI DATA.
- WHEN YOU USE THIS REPAIR, REFER TO:
  - AMM 51-21 FOR INTERIOR AND EXTERIOR FINISHES
  - AMM 51-31 FOR SEALS AND SEALING
  - SRM 51-10-1 FOR INVESTIGATION AND CLEANUP OF DAMAGE
  - SRM 51-10-2 FOR PROTECTIVE TREATMENT OF METAL
  - SRM 51-20-4 FOR SEALING OF REPAIRS
  - SRM 51-30 FOR FASTENER CODE, REMOVAL, INSTALLATION, HOLE SIZES, EDGE MARGINS AND SUBSTITUTION.

[A] FOR DAMAGE OF FRAME WHICH EXTENDS INTO AREA OF ATTACHMENT WITH REINFORCEMENT ANGLE, REFER TO FIGURE 11

[B] ORIGINAL FASTENER LOCATION. USE SAME NUMBER, TYPE, AND SIZE FASTENER AS ORIGINAL FASTENER

[C] FOR SHEAR TIE, USE SAME MATERIAL AND HEAT TREAT AFTER FORMING AS FRAME AND ONE GAGE GREATER THAN FRAME

[D] IN BILGE AREAS (BELOW CARGO DECK) APPLY BMS 3-23 TO REPAIR AREA AFTER FINAL FINISH PER SRM 51-10-2

[E] SAME SPACING AS ORIGINAL FASTENER SPACING IN REINFORCEMENT ANGLE

[F] SAME SPACING AS ORIGINAL FASTENER SPACING AT SKIN ATTACHMENT

FASTENER SYMBOLS

+ ORIGINAL FASTENER LOCATION. USE BACR15FT6D RIVET. BACR15BB6D OR MS20470D6 OPTIONAL

+ REPAIR FASTENER LOCATION. USE BACR15FT6D RIVET. BACR15BB6D OR MS20470D6 OPTIONAL

Frame Repair at Skin Attachment - Repair 1
Figure 10 (Sheet 1)

BOEING PROPRIETARY - Copyright © - Unpublished Work - See title page for details.

REPAIR MATERIAL			
PART		QTY	MATERIAL
1	SHEAR TIE	1	C
2	RADIUS FILLER	1	0.063 7075-T6 SEE DETAIL I

LIST OF REPAIR MATERIALS
FOR DETAIL II
TABLE I

SHEAR TIE 1 GAGE	ALLOY
	7075-0
0.045	0.09
0.050	0.09
0.056	0.12
0.063	0.12
0.071	0.12

INSIDE BEND RADII
ROOM TEMPERATURE FORMING
TABLE II

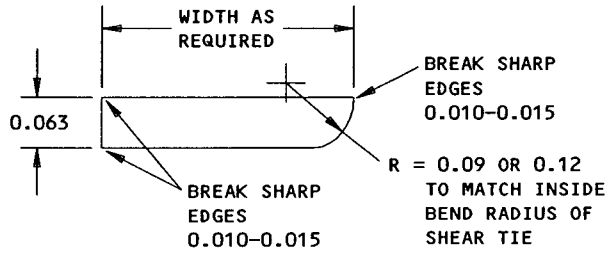

DETAIL I

Frame Repair at Skin Attachment - Repair 1
Figure 10 (Sheet 2)

BOEING PROPRIETARY - Copyright © - Unpublished Work - See title page for details.

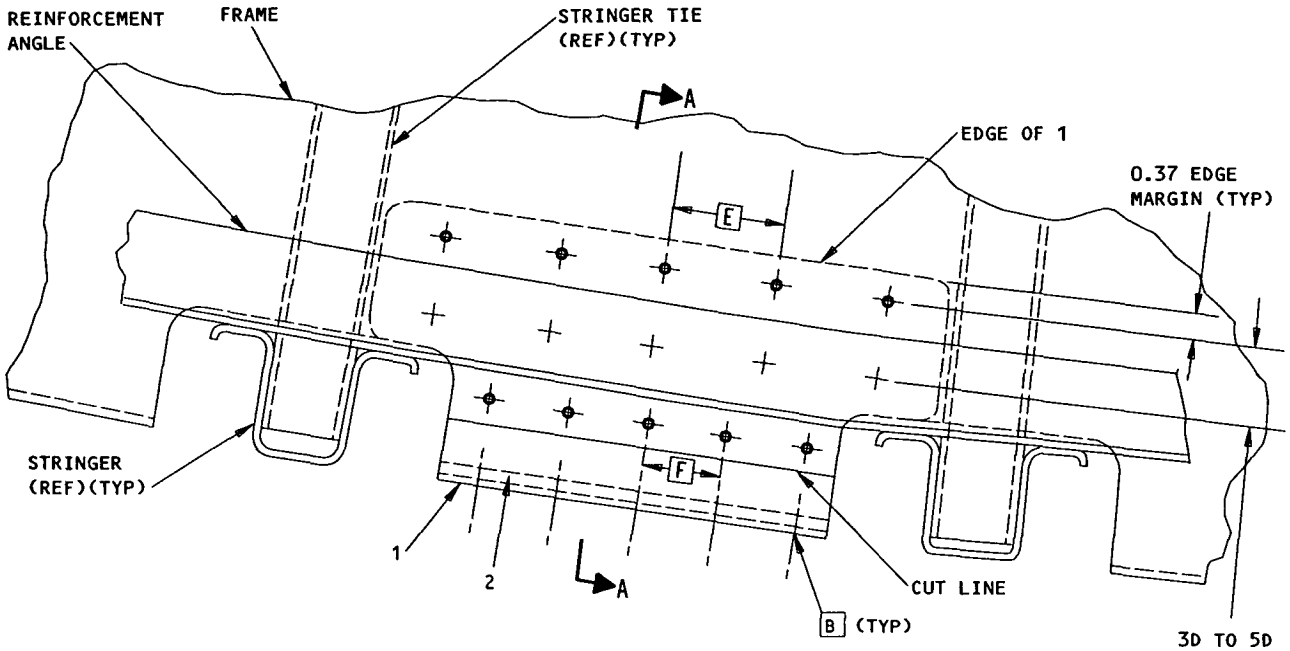

DETAIL II

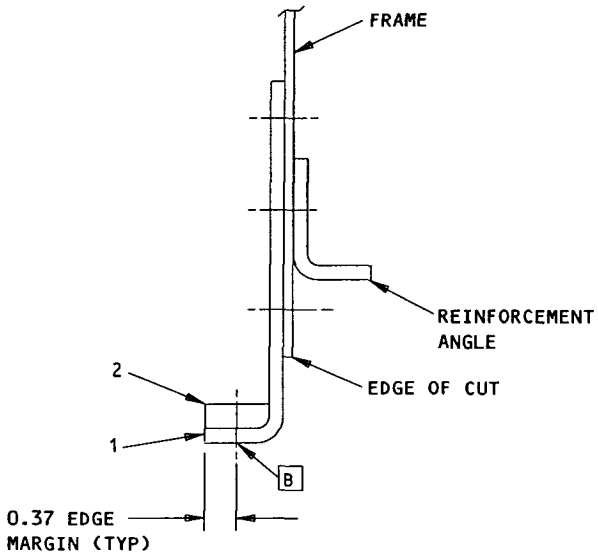

SECTION A-A

Frame Repair at Skin Attachment - Repair 1
Figure 10 (Sheet 3)

BOEING PROPRIETARY - Copyright © - Unpublished Work - See title page for details.

APPLICABILITY

THIS REPAIR APPLIES TO DAMAGED AREAS OF FRAMES (DAMAGE EXTENDING FROM SKIN ATTACHMENT TO AREA OF ATTACHMENT WITH REINFORCEMENT ANGLE) WHICH ARE ATTACHED TO THE FUSELAGE SKIN.

REPAIR INSTRUCTIONS

1. Remove and repair damaged skin as shown in applicable skin repair in SRM 53-30-3.
2. Cut and remove damaged portion of frame [A]. Cut to allow sufficient edge margin at fastener holes.
3. Make the repair parts (Table I). Bend shear tie 1 per Table II before heat treating.
4. Assemble the repair parts and drill the fastener holes.
5. Remove the repair parts.
6. Break sharp edges of original and repair parts 0.015 R to 0.030 R.
7. Remove all nicks, scratches, burrs, sharp edges and corners from original and repair parts.
8. Apply a protective chemical conversion coating to the repair parts and the cut edges of the original parts per SRM 51-10-2.
9. Apply one coat of BMS 10-11, Type I primer (and for repairs below the passenger floor, also apply one coat BMS 10-11, Type II enamel) to repair parts and the cut edges of the original parts as given in SOPM 20-41-02.
10. Install the repair parts making a faying surface seal with BMS 5-95 sealant at all mating surfaces.
11. Restore original finish per AMM 51-21. [D]

NOTES

- THIS REPAIR WILL HAVE AN EFFECT ON THE STRUCTURALLY SIGNIFICANT ITEM (SSI) NUMBER F-33 OR F-34; BUT, THE INSPECTIONS FOR F-33A THRU C AND F-34A THRU C ARE STILL APPLICABLE. DO THE INSPECTIONS FOR F-33A THRU C AND F-34A THRU C, IF NECESSARY, AT THE SUBSEQUENT SUPPLEMENTAL INSPECTION DOCUMENT (SSID) INSPECTION ON THIS AIRPLANE. REFER TO SRM 51-00-4, FIG. 3 FOR THE APPLICABLE SSI DATA.
- WHEN YOU USE THIS REPAIR, REFER TO:
  - AMM 51-21 FOR INTERIOR AND EXTERIOR FINISHES
  - AMM 51-31 FOR SEALS AND SEALING
  - SOPM 20-41-02 FOR APPLICATION OF CHEMICAL AND SOLVENT RESISTANT FINISHES
  - SRM 51-10-1 FOR INVESTIGATION AND CLEANUP OF DAMAGE
  - SRM 51-10-2 FOR PROTECTIVE TREATMENT OF METAL
  - SRM 51-20-4 FOR SEALING OF REPAIRS
  - SRM 51-30 FOR FASTENER CODE, REMOVAL, INSTALLATION, HOLE SIZES, EDGE MARGINS AND SUBSTITUTION.

[A] FOR DAMAGE OF FRAME WHICH IS LIMITED TO AREA BETWEEN REINFORCEMENT ANGLE AND SKIN ATTACHMENT, REFER TO FIGURE 10

[B] ORIGINAL FASTENER LOCATION. USE SAME NUMBER, TYPE, AND SIZE FASTENER AS ORIGINAL FASTENER

[C] FOR SHEAR TIE, USE SAME MATERIAL AND HEAT TREAT AFTER FORMING AS FRAME AND ONE GAGE GREATER THAN FRAME. FOR FILLER, USE SAME MATERIAL AND GAGE AS FRAME

[D] IN BILGE AREAS (BELOW CARGO DECK), APPLY BMS 3-23 TO REPAIR AREA AFTER FINAL FINISH PER SRM 51-10-2

[E] SAME SPACING AS ORIGINAL FASTENER SPACING IN REINFORCEMENT ANGLE

FASTENER SYMBOLS

+ ORIGINAL FASTENER LOCATION. USE BACR15FT6D RIVET. BACR15BB6D OR MS20470D6 OPTIONAL

⊕ REPAIR FASTENER LOCATION. USE BACR15FT6D RIVET. BACR15BB6D OR MS20470D6 OPTIONAL

Frame Repair at Skin Attachment - Repair 2
Figure 11 (Sheet 1)

BOEING PROPRIETARY - Copyright © - Unpublished Work - See title page for details.

REPAIR MATERIAL			
PART		QTY	MATERIAL
1	SHEAR TIE	1	C
2	FILLER	1	C
3	RADIUS FILLER	1	0.063 7075-T6 SEE DETAIL I

LIST OF REPAIR MATERIALS
FOR DETAIL II
TABLE I

SHEAR TIE 1 GAGE	ALLOY 7075-0
0.045	0.09
0.050	0.09
0.056	0.12
0.063	0.12
0.071	0.12

INSIDE BEND RADII
ROOM TEMPERATURE FORMING
TABLE II

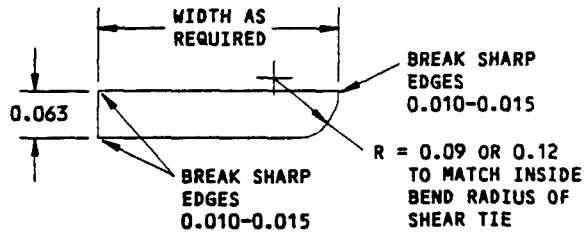

DETAIL I

Frame Repair at Skin Attachment - Repair 2
Figure 11 (Sheet 2)

332581

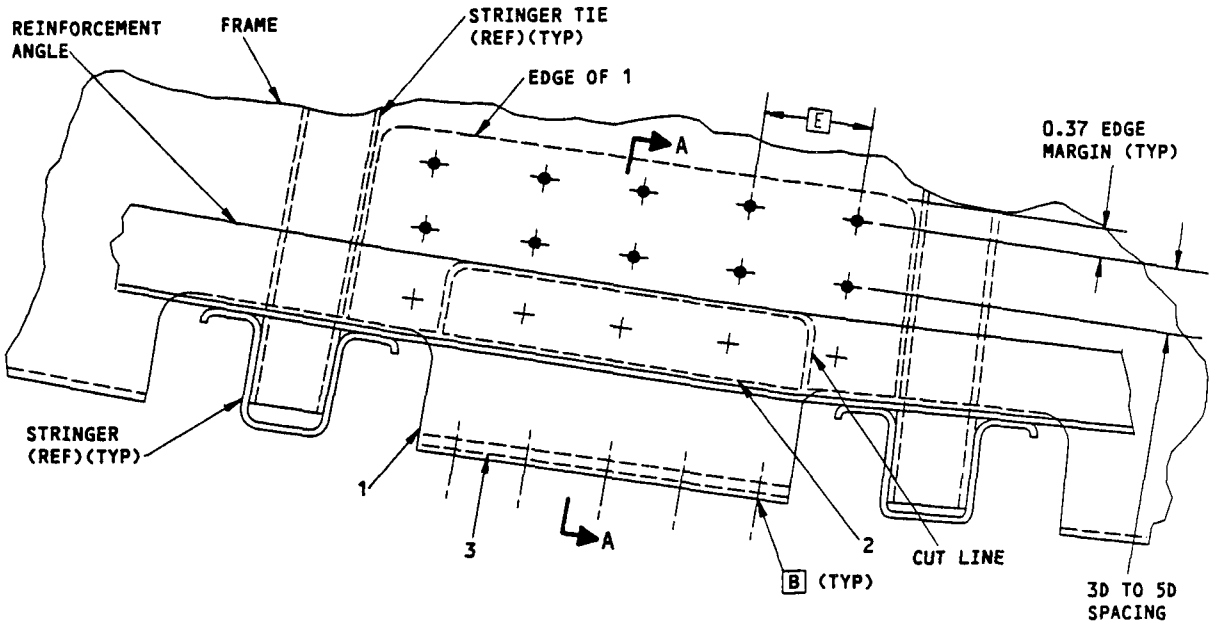

DETAIL II

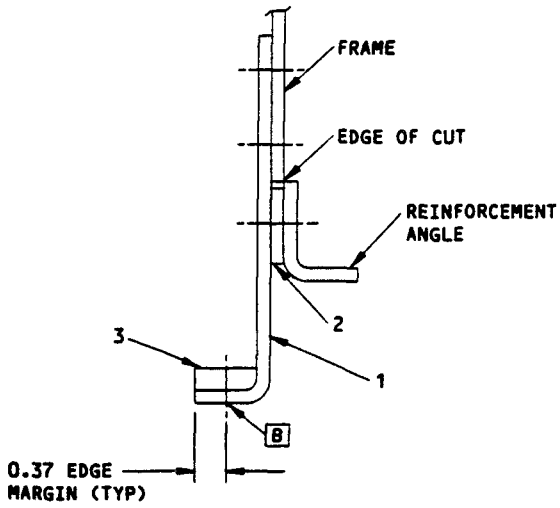

SECTION A-A

Frame Repair at Skin Attachment - Repair 2
Figure 11 (Sheet 3)

332582

THIS REPAIR IS OBSOLETE AFTER NOVEMBER 23, 2005.
REMOVE PAGES 32 AND 33.

Aft Pressure Bulkhead "Oil Can" Repair Between Tear Straps
Figure 12

BOEING PROPRIETARY - Copyright © - Unpublished Work - See title page for details.

THIS REPAIR IS OBSOLETE AFTER NOVEMBER 23, 2005.
REMOVE PAGES 35 AND 36.

Aft Pressure Bulkhead "Oil Can" Repair Across a Tear Strap
Figure 13

BOEING PROPRIETARY - Copyright © - Unpublished Work - See title page for details.

APPLICABILITY

THIS REPAIR IS APPLICABLE TO CRACKS IN THE STA 663.75 FRAME FROM STRINGER S-4L TO S-4R. SEE DETAILS I, II, AND III.

REPAIR INSTRUCTIONS

1. Get access to the repair area.
2. Remove the fasteners from the repair area as necessary. Remove the initial stringer splice and stringer splice straps.
3. Make sure all frame cracks are stop drilled or removed.
   - For cracks in the outboard flange, do one of the following procedures to stop the crack:
     a. Cut out the crack and install a filler made from 7075-T6 material as shown in Detail III.
     b. If the crack extends from the edge of the frame and stops at a fastener hole:
        1. Make sure a crack is not on the other side of the hole. Refer to SRM 51-10-1 and NDT, part 6, 51-00-00. Note: It will not be necessary to cut out the crack in the flange and install a filler.
   - For cracks in the web of the frame only, stop drill a hole at the crack end. Refer to SRM 51-10-1 and NDT, part 6, 51-00-00. If the crack extends into the outboard flange:
     a. Cut out the crack from the flange and the web
     b. Make and install a filler made from 7075-T6 material. See Detail III.
4. Make the part 1 angle. See Table I and Detail V.
5. Do a penetrant inspection of the part 1 angle. Refer to SOPM 20-20-02.
6. Shot peen the entire surface of the part 1 angle [A].
7. Make the repair parts 2 thru 4. See Table I and Detail IV.
8. Assemble the repair parts
   - Install the part 2 fillers
   - Install the part 3 stringer splice [D]
   - Drill the fastener holes through the part 3 stringer splice, part 2 fillers, and the initial stringer
   - Install part 4 stringer tie

   and drill the fastener holes. See Details IV and V.
9. Disassemble all of the repair parts.
10. Remove the nicks, scratches, gouges, burrs, and sharp edges from the repair parts and the initial frame.
11. Apply a chemical conversion coating to the repair parts and to the bare surfaes of the initial frame. Refer to SRM 51-10-2.
12. Apply two layers of BMS 10-11, Type I primer to the repair parts and to the bare surfaces of the initial frame. Refer to SOPM 20-41-02.
13. Install the repair parts with BMS 5-95 sealant between the mating surfaces.
14. Install the hex drive bolts wet with BMS 5-95 sealant in transition fit holes. Install rivets dry.
15. Apply one layer of BMS 10-11, Type I primer to the repaired area. Refer to SOPM 20-41-02.

NOTES

- IT IS PERMITTED TO EXTEND THE DIMENSIONS OF THIS REPAIR TO INCLUDE MORE THAN ONE DAMAGED FRAME HOLE AT A STRINGER LOCATION.
- THIS REPAIR WILL HAVE AN EFFECT ON THE STRUCTURALLY SIGNIFICANT ITEM (SSI) NUMBER F-39B, C, G AND H; BUT, THE EXTERNAL INSPECTION ALTERNATIVES FOR F-39B, C, G AND H ARE STILL APPLICABLE. DO THE INSPECTIONS FOR F-39B, C, G AND H, IF NECESSARY, AT THE SUBSEQUENT STRUCTURAL INSPECTION DOCUMENT (SSID) INSPECTION ON THIS AIRPLANE. REFER TO SRM 51-00-4, FIG. 3 FOR THE APPLICABLE SSI DATA.
- USE SHIMS AS NECESSARY TO KEEP THE GAPS 0.005 INCH OR LESS BEFORE FASTENER INSTALLATION.
- ALL DIMENSIONS ARE IN INCHES, UNLESS GIVEN DIFFERENTLY.
- D = THE FASTENER DIAMETER
- WHEN YOU DO THIS REPAIR, REFER TO:
  - NDT PART 6, 51-00-00 FOR EDDY CURRENT PROCEDURES OF GENERAL STRUCTURES
  - SOPM 20-20-02 FOR PENETRANT INSPECTION METHODS
  - SOPM 20-41-02 FOR APPLICATION OF CHEMICAL AND SOLVENT RESISTANT FINISH
  - SRM 51-10-1 FOR DAMAGE CLASSIFICATION
  - SRM 51-10-2 FOR PROTECTIVE TREATMENT OF METAL
  - SRM 51-10-8 FOR SHOT PEENING PROCEDURES
  - SRM 51-30 FOR FASTENER CODE, REMOVAL AND INSTALLATION, HOLE SIZES AND EDGE MARGINS
  - SRM 51-30-3 FOR FASTENER SUBSTITUTION
  - SRM 51-30-8 FOR COUNTERSINKING OF HOLES

STA 663.75 Frame Repair
Figure 14 (Sheet 1)

BOEING PROPRIETARY - Copyright © - Unpublished Work - See title page for details.

[A] SHOT PEEN THE SURFACE WITH AN INTENSITY OF 0.006A, COVERAGE OF 1.0, AND SHOT SIZE OF 230-550. REFER TO SRM 51-10-8.

[B] YOU CAN GET THE PART 3 SPLICE, BOEING DRAWING NUMBER 65-62208, FROM THE BOEING COMPANY SPARES DEPARTMENT.

- USE PART NO. 65-62208-15 FOR STRINGERS S-1, S-2L, S-2R, S-3L, AND S-3R.
- USE PART NO. 65-62208-16 FOR STRINGERS S-4L AND S-4R.

THE ENDS OF THIS SPLICE WILL HAVE MORE MATERIAL SO YOU CAN KEEP PROPER EDGE MARGINS.

[C] ADJUST THE FASTENER LOCATIONS AND THE SHAPE OF THE PART 1 ANGLE AS NECESSARY FOR THE REPAIR.

[D] MAKE THE INITIAL CUTOUT IN THE FRAME LARGER, IF NECESSARY, UNTIL IT IS CLEAR OF THE STRINGER SPLICE.

[E] ADJUST THE LENGTH OF THE FILLER TO KEEP 2D EDGE MARGINS. MAKE THE END OF THE FILLER 0.060 INCH THICK FOR THE LAST TWO FASTENER LOCATIONS AWAY FROM THE STRINGER SPLICE. SEE DETAIL VI.

[F] TIES FOR STRINGERS 3L THRU 3R CAN BE MADE ALMOST THE SAME AS THOSE AT STRINGERS 4L AND 4R. ATTACH THE STRINGER TIE TO THE FRAME FIRST TO GET A PROPER FIT AND TO AVOID THE USE OF SHIMS.

[G] THE REPAIR SHOULD BE EXTENDED SO THAT THERE IS A MINIMUM OF FIVE BACB30KF6A() HEX DRIVE BOLTS ON EACH SIDE OF THE CRACK LOCATION.

[H] PUT THE EDGE OF THE CUT AREA IN THE MIDDLE OF THE ADJACENT SKIN FASTENERS.

FASTENER SYMBOLS

- REPAIR FASTENER LOCATION. INSTALL A MS20470D8 RIVET
- REPAIR FASTENER LOCATION. INSTALL A MS20470D6 RIVET
- REPAIR FASTENER LOCATION. INSTALL A BACR15CE6D() RIVET. USE A 1/32 INCH OVERSIZE FASTENER IF NECESSARY
- REPAIR FASTENER LOCATION. INSTALL A BACB30FM6A() HEX DRIVE BOLT AND A BACC30M COLLAR. AS AN ALTERNATIVE, INSTALL MS20470D6 RIVETS.
- REPAIR FASTENER LOCATION. INSTALL A BACB30KF6A() HEX DRIVE BOLT AND A BACC30R COLLAR

REPAIR MATERIAL			
PART		QTY	MATERIAL
1	ANGLE	1	EXTRUSION [A] [C] 7075-T0 MAKE FROM BAC1514-1096 OR EQUIVALENT. H.T. TO T73 (PREFERRED) OR T6
2	FILLER	2	7075-T6 [E] 0.75 WIDTH X 0.135 THICK SEE DETAIL VI ADJUST LENGTH TO FIT REPAIR
3	STRINGER SPLICE	1	7075-O CLAD [B] H.T. TO T6 0.063 THICK X 4.1 WIDE X 14.4 OR 14.9 LONG
4	STRINGER TIE	1	7075-O CLAD [F] 0.05 THICK H.T. TO T6 0.09 MINIMUM INSIDE BEND

TABLE I

STA 663.75 Frame Repair
Figure 14 (Sheet 2)

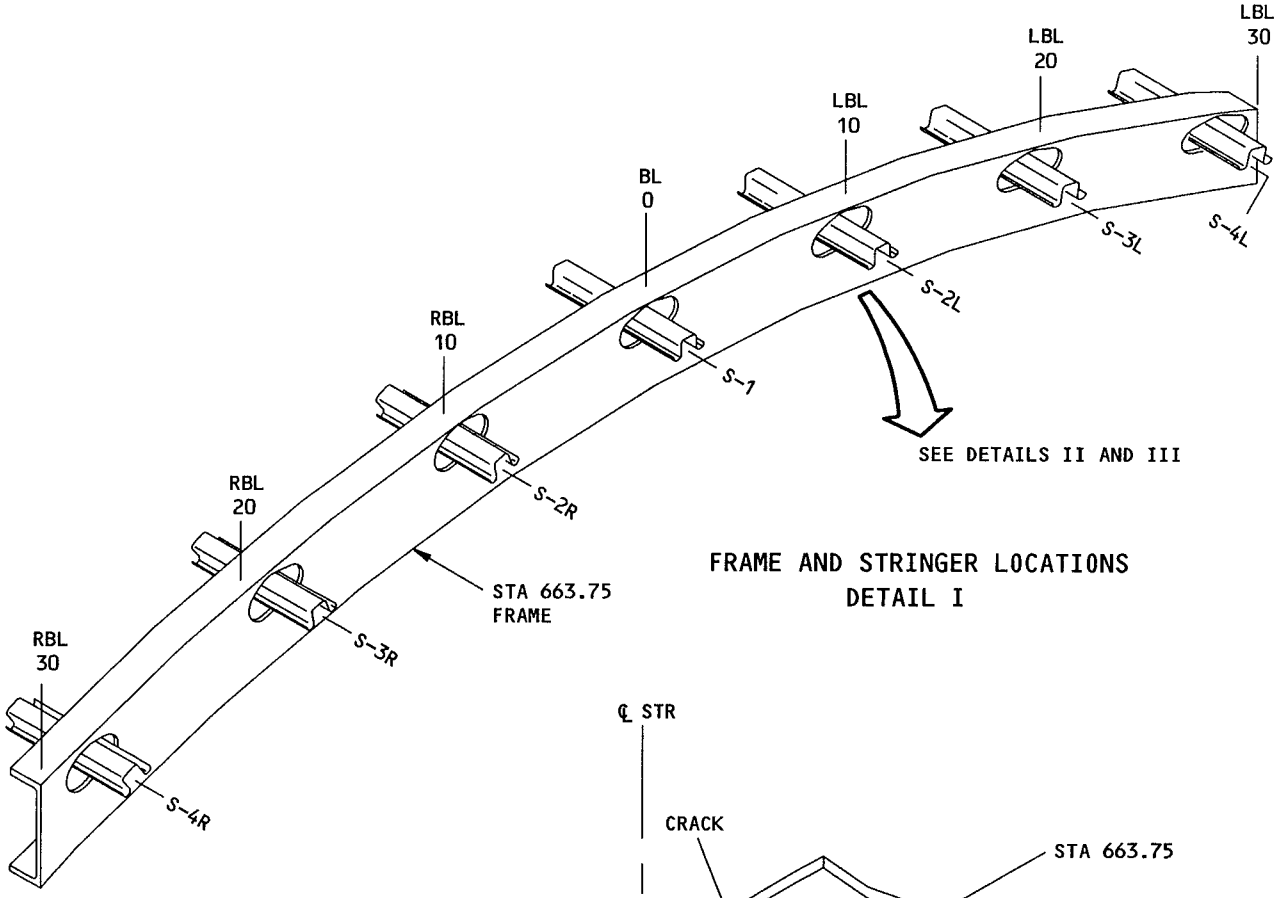

FRAME AND STRINGER LOCATIONS
DETAIL I

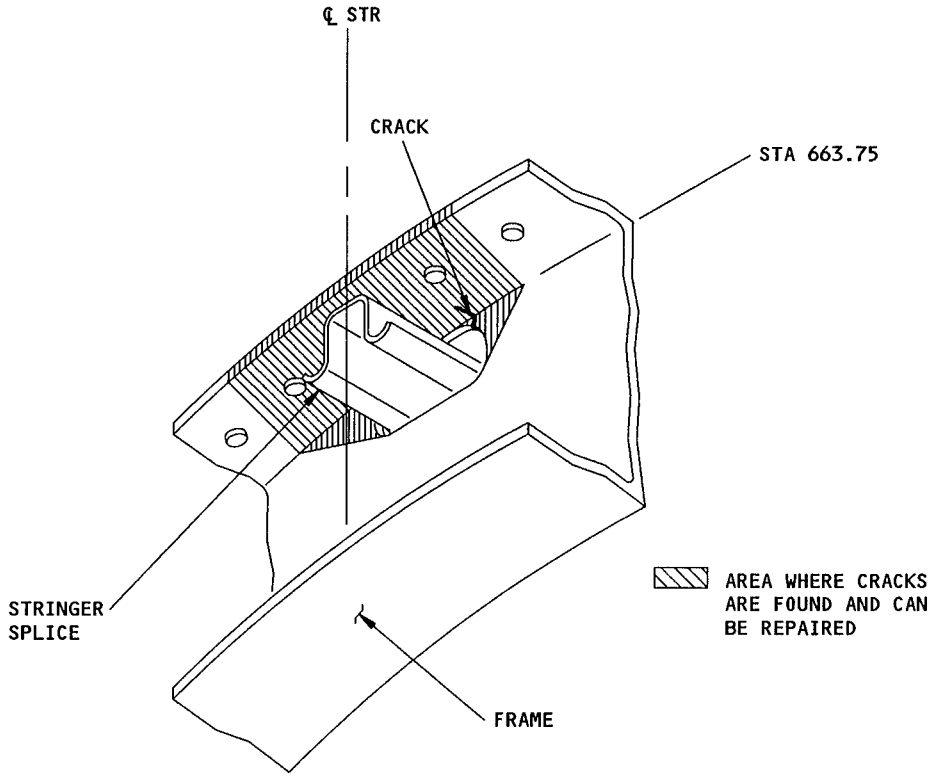

TYPICAL DAMAGE LOCATION
DETAIL II

STA 663.75 Frame Repair
Figure 14 (Sheet 3)

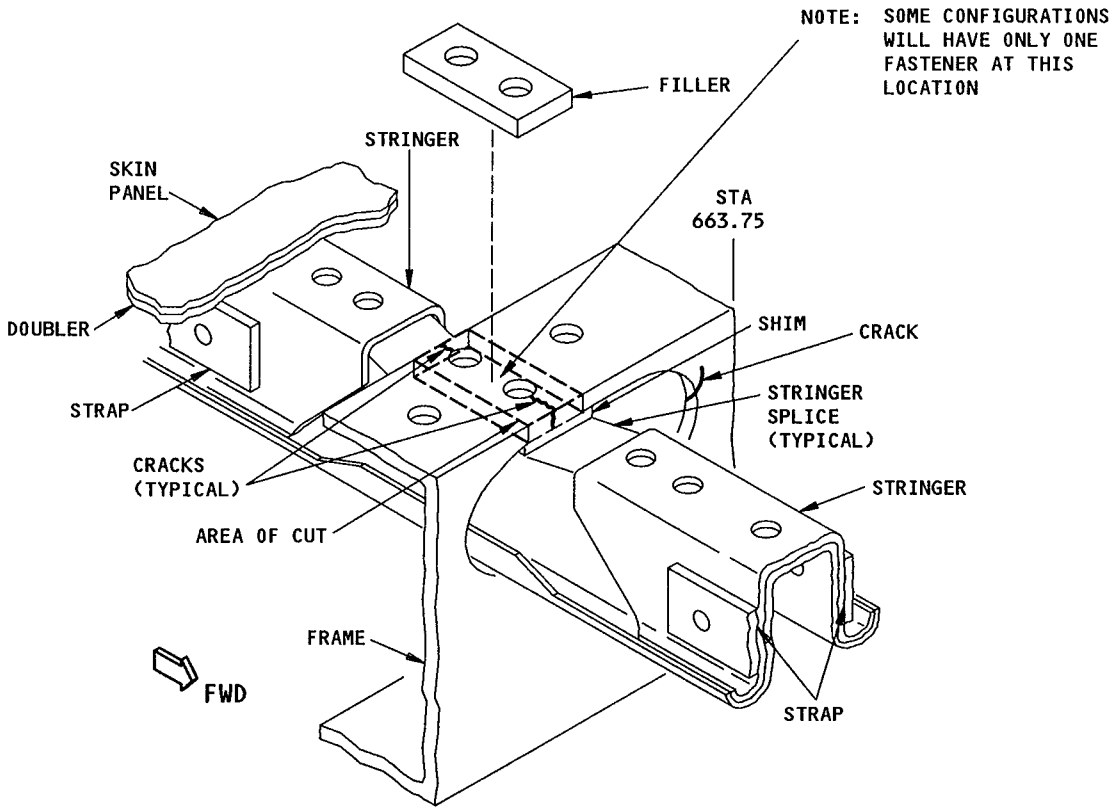

OPTIONAL CRACK REMOVAL PROCEDURE
DETAIL III

STA 663.75 Frame Repair
Figure 14 (Sheet 4)

E56354

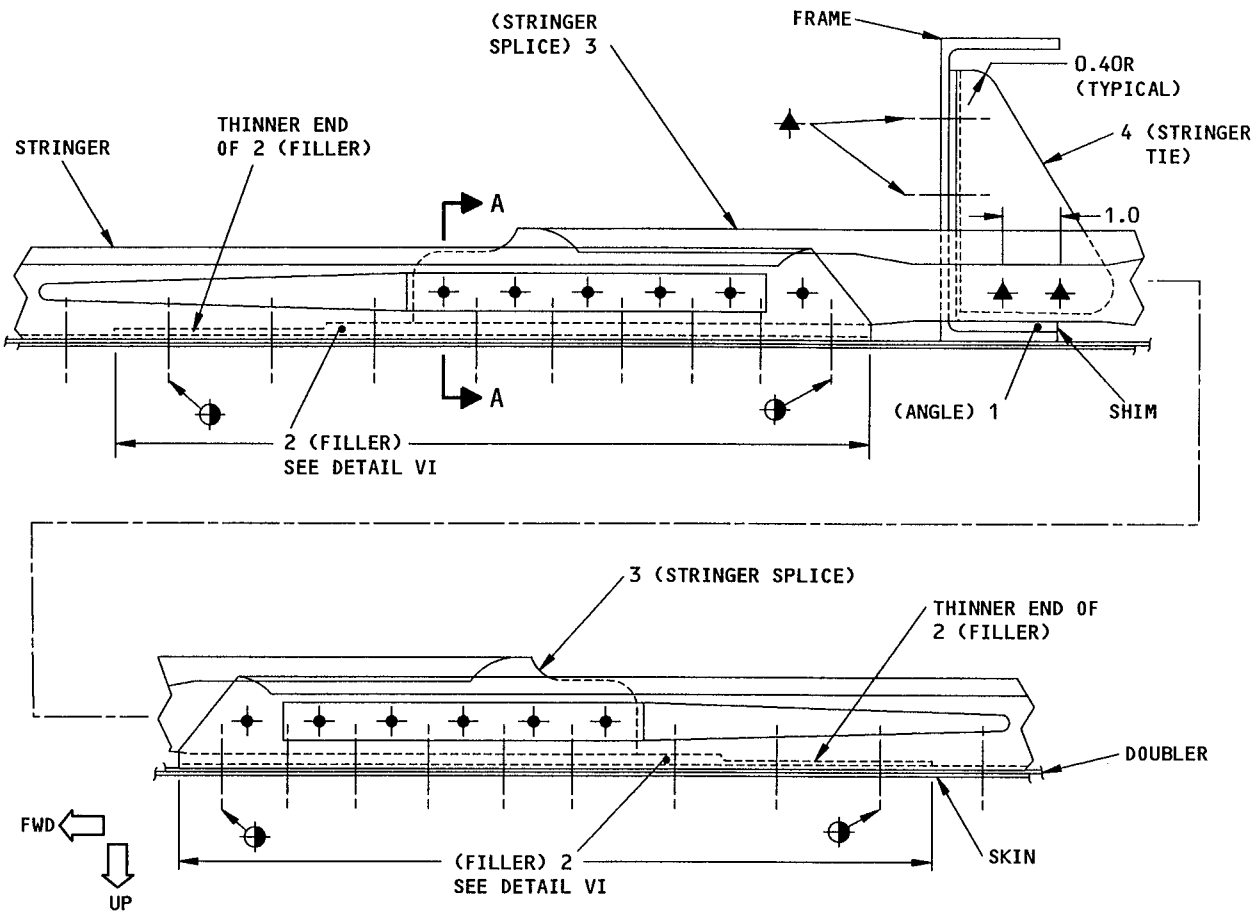

SIDEVIEW NEAR BL 0.0

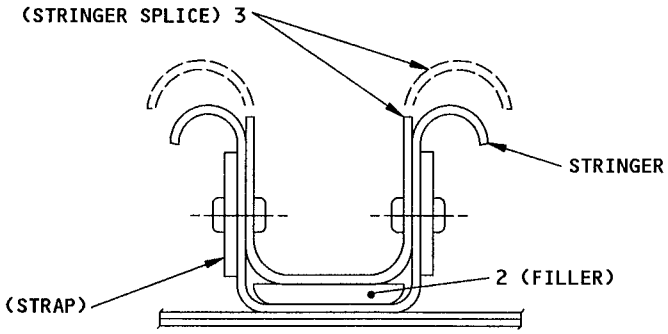

SECTION A-A
DETAIL IV

STA 663.75 Frame Repair
Figure 14 (Sheet 5)

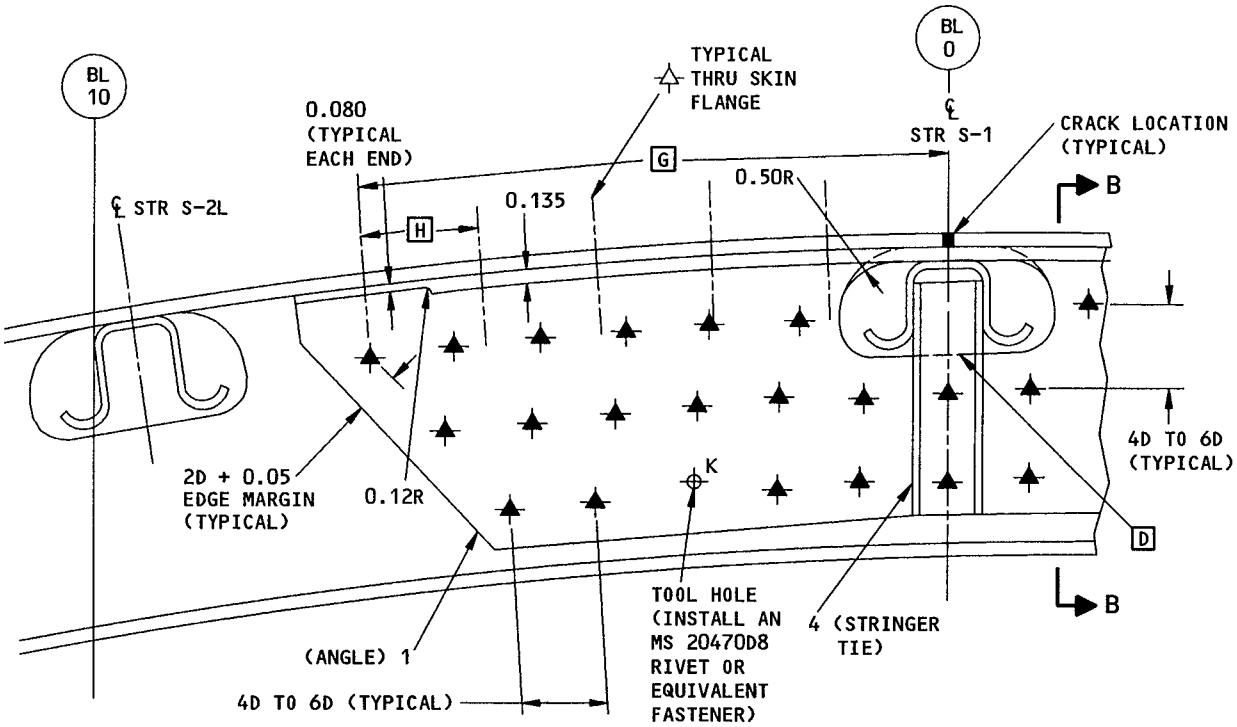

AFT VIEW LOOKING FORWARD
(REPAIR SYMMETRICAL ABOUT STR ℄)

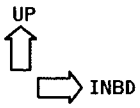

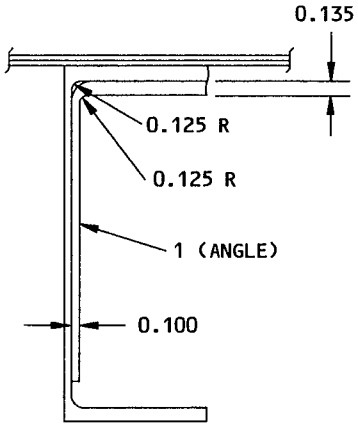

SECTION B-B

REPAIR AT BL 0.0
(OTHER LOCATIONS ARE SIMILAR)
DETAIL V

STA 663.75 Frame Repair
Figure 14 (Sheet 6)

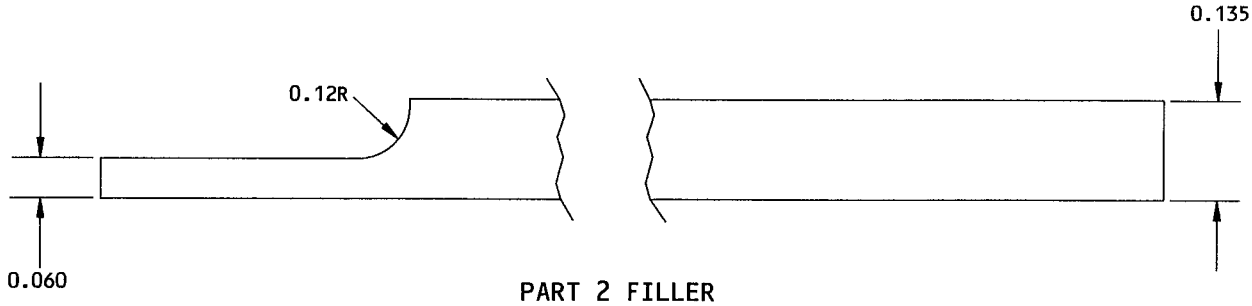

PART 2 FILLER
DETAIL VI

STA 663.75 Frame Repair
Figure 14 (Sheet 7)

APPLICABILITY

THIS REPAIR IS APPLICABLE TO THE BSTA 1016 AFT PRESSURE BULKHEAD WEB ATTACHMENT TO THE "Y" CHORD. IT IS APPROVED FOR USE TO REPAIR CRACKS, CORROSION OR ELONGATED HOLES BETWEEN STRINGER 5 AND STRINGER 7. IT IS NOT APPROVED TO REPAIR DAMAGE AT OTHER LOCATIONS.

REPAIR INSTRUCTIONS

1. Get access to the damaged area.
2. Do a high frequency eddy current (HFEC) inspection of all fastener holes through the "Y" chord in the repair area. Inspect along both rows of fasteners from Stringer 5 to Stringer 7. Refer to NDT Part 6, 51-00-00, Fig. 23.

CAUTION: USE SPECIAL CARE TO CUT AND REMOVE THE DAMAGED AREA OF THE WEB. DO NOT GOUGE, SCRATCH OR BUCKLE THE WEB ADJACENT TO THE REPAIR. IF YOU DAMAGE THE STRUCTURE ADJACENT TO THE REPAIR, MORE REPAIR WORK CAN BE NECESSARY.

3. Cut and remove the damaged part of the web.
4. Do a high frequency eddy current (HFEC) inspection of the cutout edge to make sure that there are no cracks. Cut an additional 0.040 inch from around the periphery. Refer to NDT Part 6, 51-00-00, Figure 23.
5. Make the repair parts. See Table I.

NOTE:

- PRE-FORM THE REPAIR PARTS AS GIVEN IN BAC5300, WITH SPECIAL ATTENTION TO:
  - FIT UP FORCES PER BAC5300 11.1.5
  - METAL THINNING PER BAC5300 11.1.2
  - INSTALLATION OF SHIMS PER BACC5300 8.10.3
  - SURFACE WAVINESS PER BAC5300 11.1.4
  - SURFACE INTEGRITY PER BAC5300 11.3 TABLE X.
- REVERSE FORMING OF REPAIR PARTS IS NOT PERMITTED.

6. Assemble the repair parts and drill the fastener holes. All repairs must keep the applicable edge margins and fastener spacings.
7. Disassemble the repair parts.
8. Remove the nicks, scratches, gouges, burrs, and sharp edges from the repair parts and the web or chord.
9. Apply a chemical conversion coating to the repair parts and to the bare surfaces of the chord and web. Refer to SRM 51-10-2.
10. Apply two layers of BMS 10-11, Type I primer to the repair parts and to the bare surfaces of the web and chord. Refer to SOPM 20-41-02.
11. Install the repair parts with BMS 5-95 sealant between the mating surfaces.
12. Install the fasteners. Fasteners that are not made of aluminum must be installed wet with BMS5-95 sealant.
13. Apply a layer of BMS 3-23 or BMS 3-29 corrosion inhibiting compound to the repair area. Refer to SRM 51-10-2.

NOTES

- THIS REPAIR IS RELATED TO SERVICE BULLETIN 737-53A1214 AND AD 99-08-23. THIS REPAIR IS APPROVED AS AN ALTERNATE METHOD OF COMPLIANCE TO PARAGRAPH C AND D.3 OF AD 99-08-23. THE ALTERNATE METHOD OF COMPLIANCE APPLIES ONLY TO THE REPAIRED AREA. INSPECTIONS IN THE NON-REPAIRED AREAS MUST BE CONTINUED AS SPECIFIED IN AD 99-08-23.
- THIS REPAIR IS CATEGORY B. THE CATEGORY B REPAIR HAS FAA APPROVAL IF YOU DO THE SUPPLEMENTAL INSPECTIONS GIVEN IN TABLE II. SEE DETAILS III AND IV FOR THE INSPECTION AREAS.
- THIS REPAIR WILL HAVE AN EFFECT ON STRUCTURAL SIGNIFICANT ITEM (SSI) F-30C, AS GIVEN IN SRM 51-00-4, FIG. 3. SEE TABLE III FOR THE INSPECTION REQUIREMENTS.
- D = FASTENER DIAMETER.
- MAINTAIN 1.7D MINIMUM EDGE SPACING FOR ALL INITIAL FASTENERS.
- MAINTAIN 2D MINIMUM EDGE SPACING AND 4D TO 6D SPACING FOR ALL NEW FASTENERS.
- WHEN YOU DO THIS REPAIR, REFER TO:
  - AMM 51-21-0 FOR INTERIOR AND EXTERIOR FINISHES
  - AMM 51-31-0 FOR SEALS AND SEALING
  - SOPM 20-41-02 FOR APPLICATION OF FINISHES
  - SRM 51-10-1 FOR INVESTIGATION AND CLEANUP OF DAMAGE
  - SRM 51-10-2 FOR PROTECTIVE TREATMENT OF METAL
  - SRM 51-30 FOR FASTENER CODE, INSTALLATION AND REMOVAL, HOLE SIZES AND EDGE MARGINS.

[A] SEE DETAIL VII FOR SIZING OF THE TAPERED SHIM.

[B] REFER TO THE 737 SSID DOCUMENT (D6-37089) FOR INSPECTION METHODS, THRESHOLDS AND REPEAT INTERVALS.

STA 1016 Aft Pressure Bulkhead Web to "Y" Chord Attachment Crack Repair
Figure 15 (Sheet 1)

BOEING PROPRIETARY - Copyright © - Unpublished Work - See title page for details.

FASTENER SYMBOLS

- REFERENCE FASTENER LOCATION.
- REPAIR FASTENER LOCATION. INSTALL A BACB30MY6K() HEX DRIVE BOLT WITH A BACC30M6 COLLAR.
- INITIAL FASTENER LOCATION. INSTALL A BACB30MY6K() HEX DRIVE BOLT WITH A BACC30M6 COLLAR.
- INITIAL FASTENER LOCATION. INSTALL A BACB30MY6K()Y HEX DRIVE BOLT WITH A BACC30R6 COLLAR.
- INITIAL FASTENER LOCATION. INSTALL THE SAME TYPE AND DIAMETER FASTENER AS THE INITIAL FASTENER(UP TO 1/32 INCH DIAMETER OVERSIZE)

REPAIR MATERIAL			
PART		QTY	MATERIAL
1	DOUBLER	1	0.040 CLAD 2024-T42
2	FILLER	1	0.032 CLAD 2024-T42
3	TRIPLER	1	0.040 CLAD 2024-T42
4	TAPERED SHIM	2	CLAD 2024-T42 [A]

TABLE I

STA 1016 Aft Pressure Bulkhead Web to "Y" Chord Attachment Crack Repair
Figure 15 (Sheet 2)

BOEING PROPRIETARY - Copyright © - Unpublished Work - See title page for details.

SUBSEQUENT INSPECTIONS ARE NECESSARY FOR CATEGORY B REPAIRS. SEE TABLE II FOR INSPECTION REQUIREMENTS.

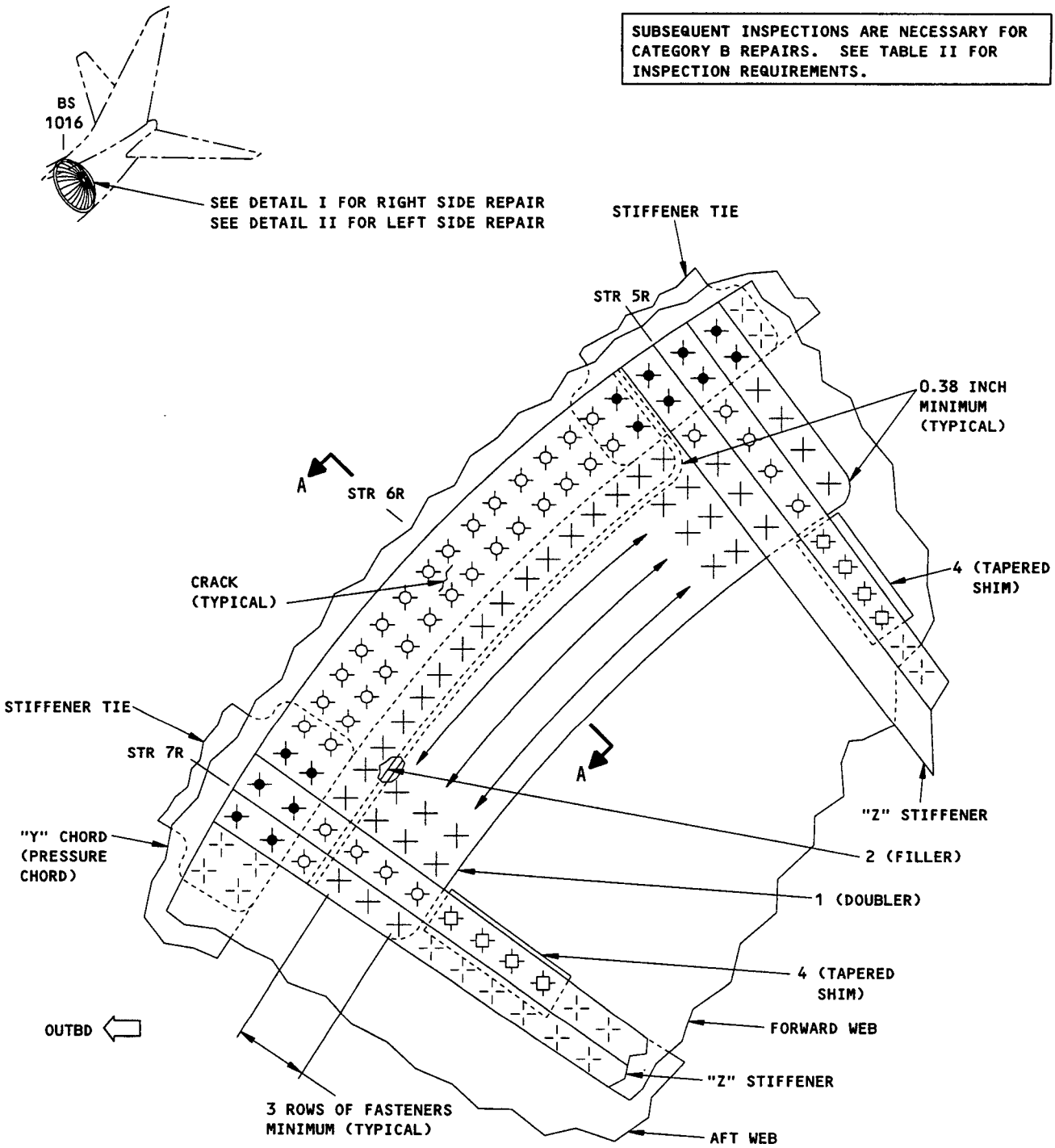

RIGHT SIDE IS SHOWN
VIEW LOOKING AFT
DETAIL I

STA 1016 Aft Pressure Bulkhead Web to "Y" Chord Attachment Crack Repair
Figure 15 (Sheet 3)

BOEING PROPRIETARY - Copyright © - Unpublished Work - See title page for details.

SUBSEQUENT INSPECTIONS ARE NECESSARY FOR CATEGORY B REPAIRS. SEE TABLE II FOR INSPECTION REQUIREMENTS.

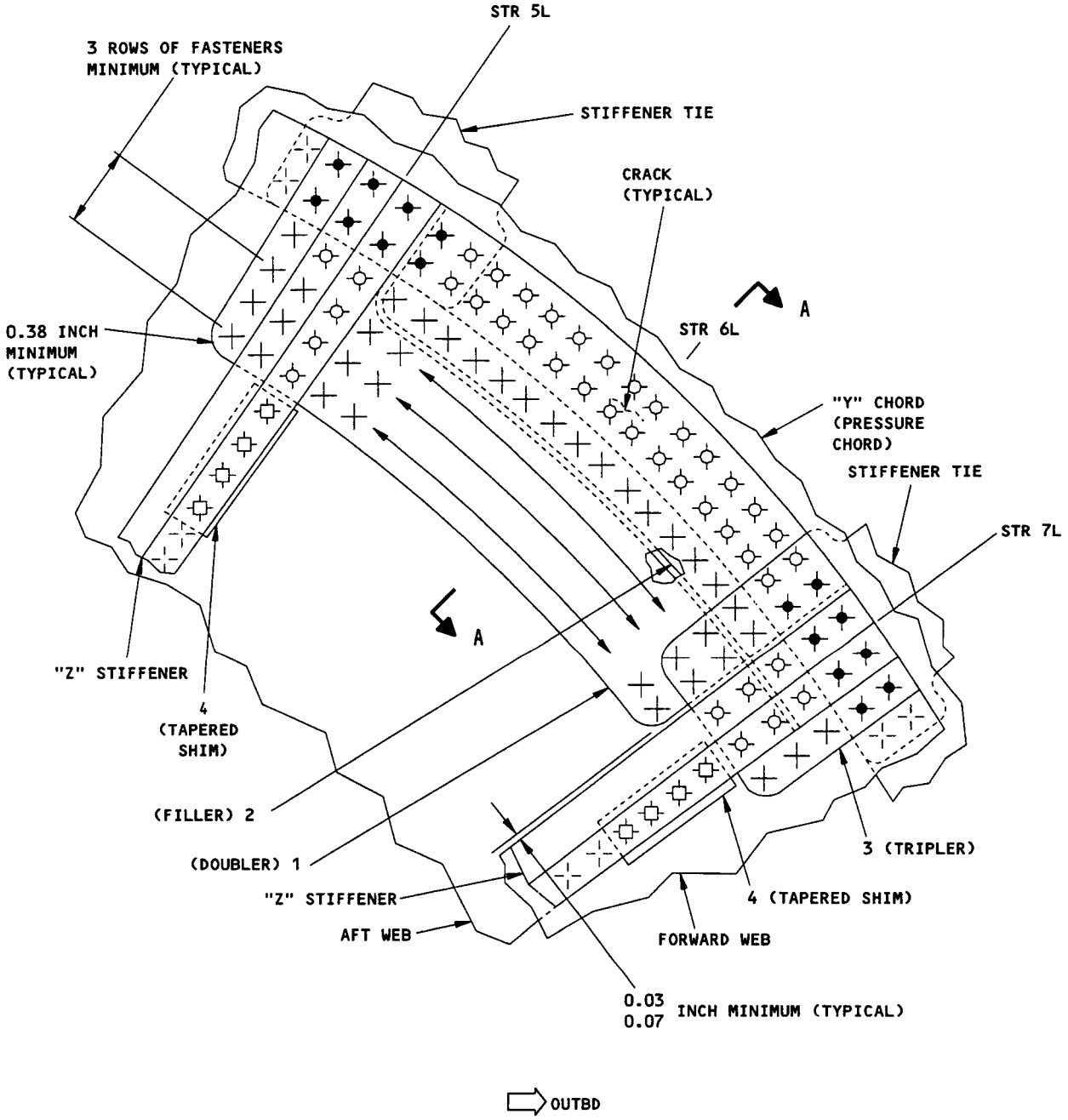

LEFT SIDE IS SHOWN
VIEW LOOKING AFT
DETAIL II

STA 1016 Aft Pressure Bulkhead Web to "Y" Chord Attachment Crack Repair
Figure 15 (Sheet 4)

BOEING PROPRIETARY - Copyright © - Unpublished Work - See title page for details.

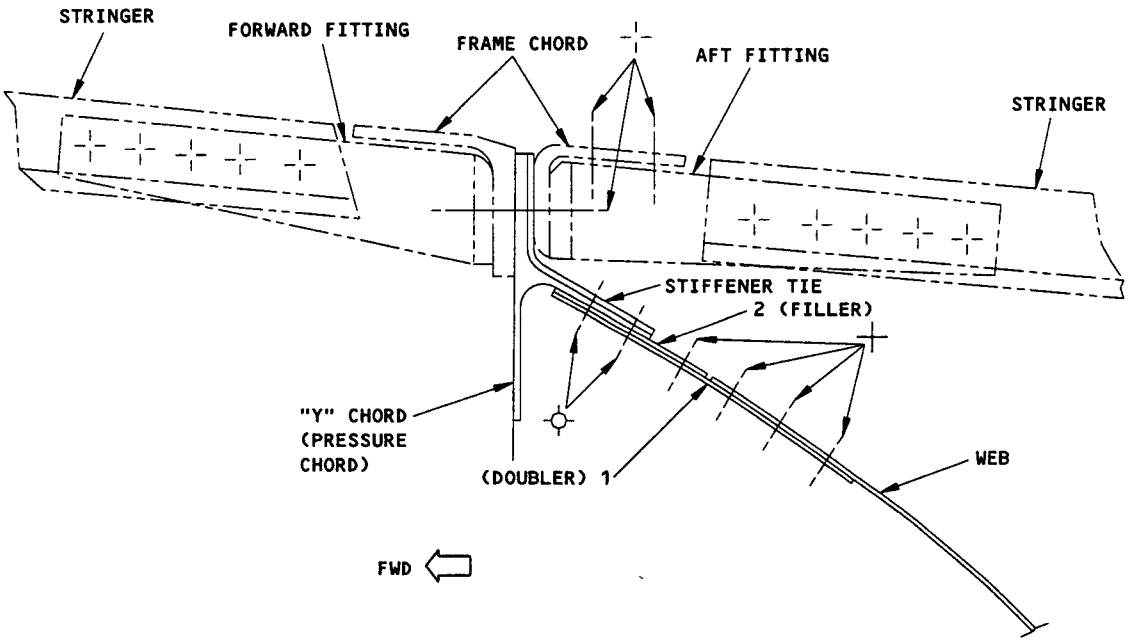

SECTION A-A

CATEGORY B REPAIR INSPECTION REQUIREMENTS				
INSPECTION THRESHOLD	REPEAT INSPECTION INTERVALS			
	AREA	METHOD	INTERVAL	REFERENCE
12,000 CYCLES	WEB	HFEC	12,000 CYCLES	737 NDT, PART 6, 51-00-00, FIGURE 23.
	DOUBLER	HFEC	12,000 CYCLES	
NOTE: - inspect the web from the aft side as shown in Detail III and IV. - inspect the Part 1 doubler from the forward side as shown in Detail III and IV.				

TABLE II

STA 1016 Aft Pressure Bulkhead Web to "Y" Chord Attachment Crack Repair
Figure 15 (Sheet 5)

BOEING PROPRIETARY - Copyright © - Unpublished Work - See title page for details.

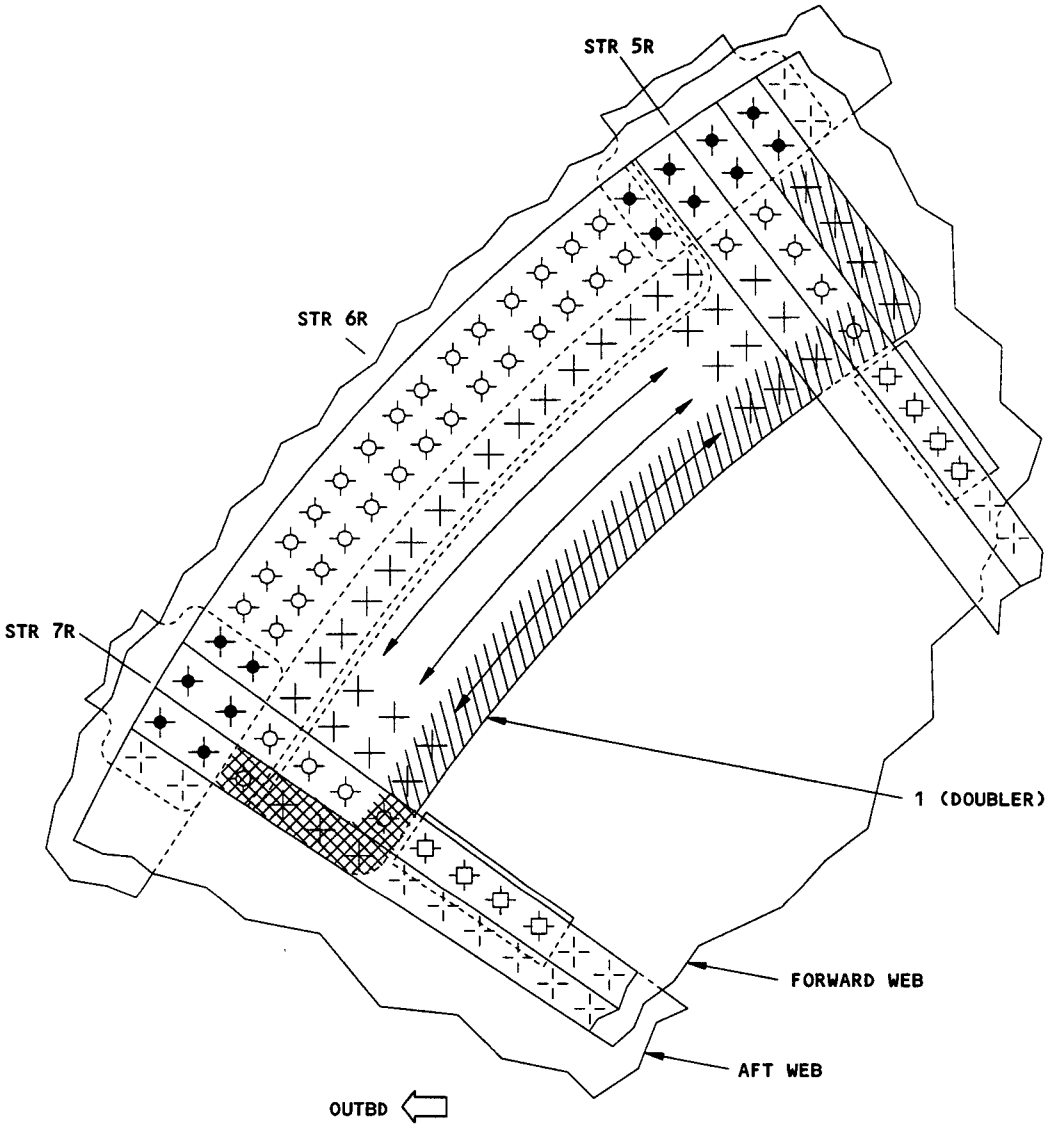

HFEC INSPECT THE FORWARD WEB FROM THE AFT SIDE

HFEC INSPECT THE AFT WEB FROM THE AFT SIDE

(RIGHT SIDE IS SHOWN)
VIEW LOOKING AFT
INSPECTION AREA FOR DETAIL I
DETAIL III

STA 1016 Aft Pressure Bulkhead Web to "Y" Chord Attachment Crack Repair
Figure 15 (Sheet 6)

BOEING PROPRIETARY - Copyright © - Unpublished Work - See title page for details.

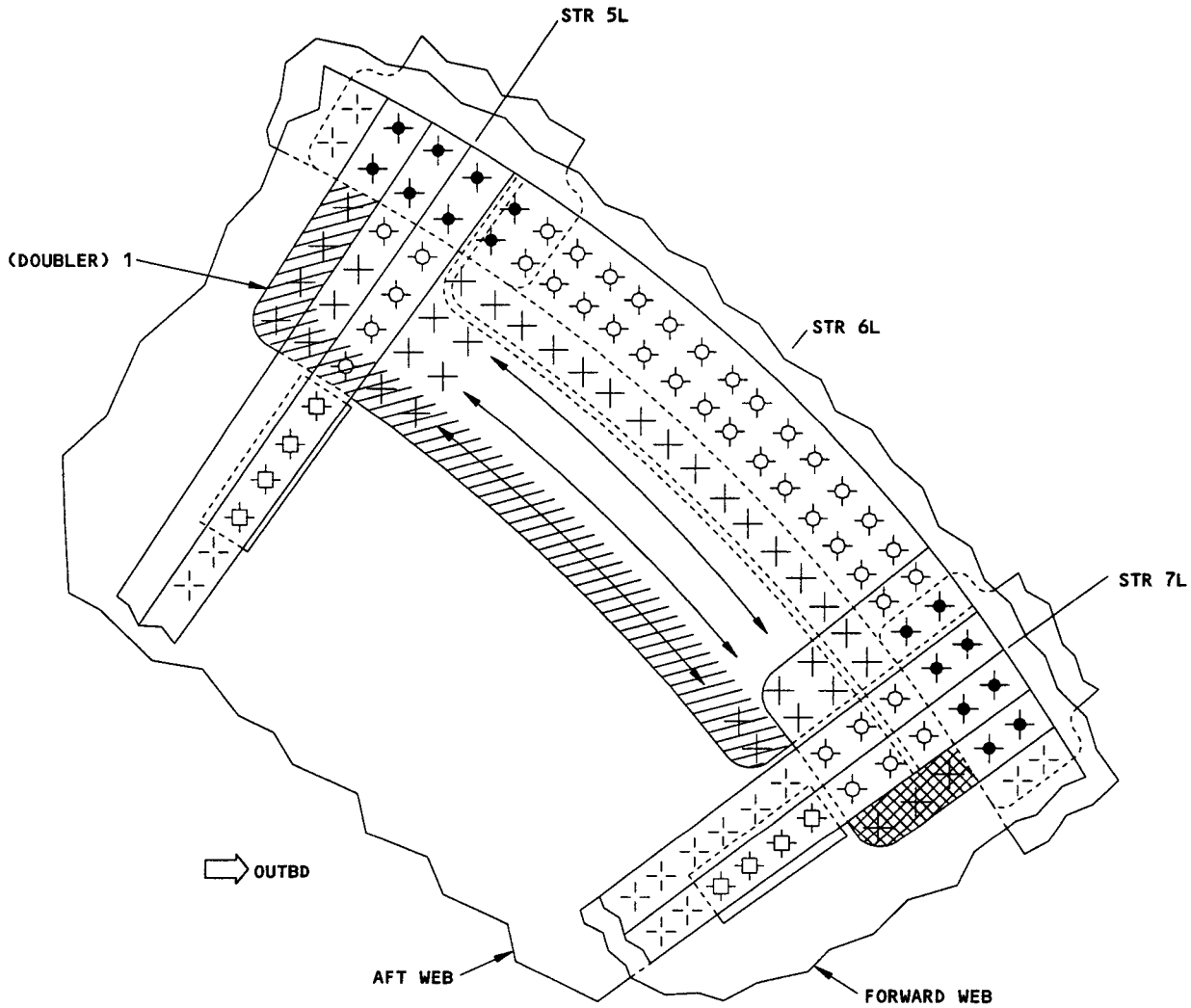

HFEC INSPECT THE AFT WEB FROM THE AFT SIDE

HFEC INSPECT THE FORWARD WEB FROM THE AFT SIDE

(LEFT SIDE IS SHOWN)
VIEW LOOKING AFT
INSPECTION AREA FOR DETAIL II
DETAIL IV

STA 1016 Aft Pressure Bulkhead Web to "Y" Chord Attachment Crack Repair
Figure 15 (Sheet 7)

BOEING PROPRIETARY - Copyright © - Unpublished Work - See title page for details.

SSID NUMBER F-30C INSPECTION REQUIREMENTS			
INSPECTION THRESHOLD	REPEAT INSPECTION		
	METHOD	INTERVAL	REFERENCE
B	SEE DETAIL V AND VI	B	737 NDT MANUAL, PART 6 53-30-00, FIG. 6
NOTE: Inspect the web in the repair area as shown in Details V and VI.			

TABLE III

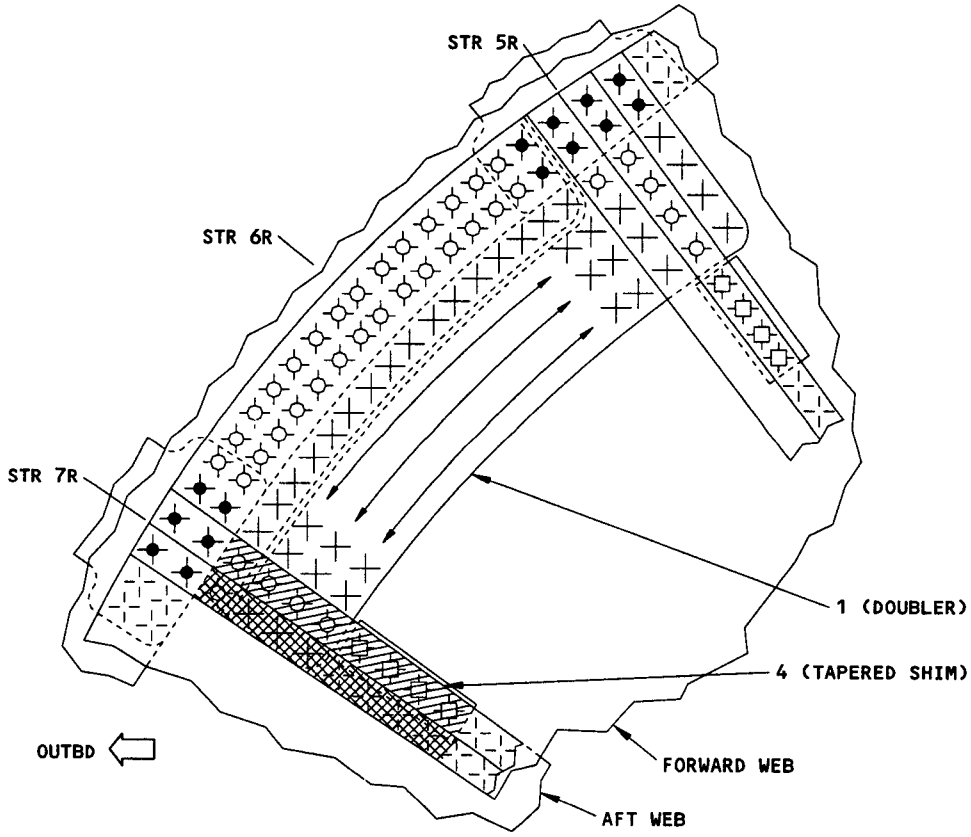

LFEC INSPECTION OF THE FORWARD WEB PER F-30C MUST BE DONE FROM THE AFT SIDE B

HFEC INSPECTION OF THE AFT WEB PER F-30D IS NOT AFFECTED

(RIGHT SIDE IS SHOWN)
VIEW LOOKING AFT
DETAIL V

STA 1016 Aft Pressure Bulkhead Web to "Y" Chord Attachment Crack Repair
Figure 15 (Sheet 8)

BOEING PROPRIETARY - Copyright © - Unpublished Work - See title page for details.

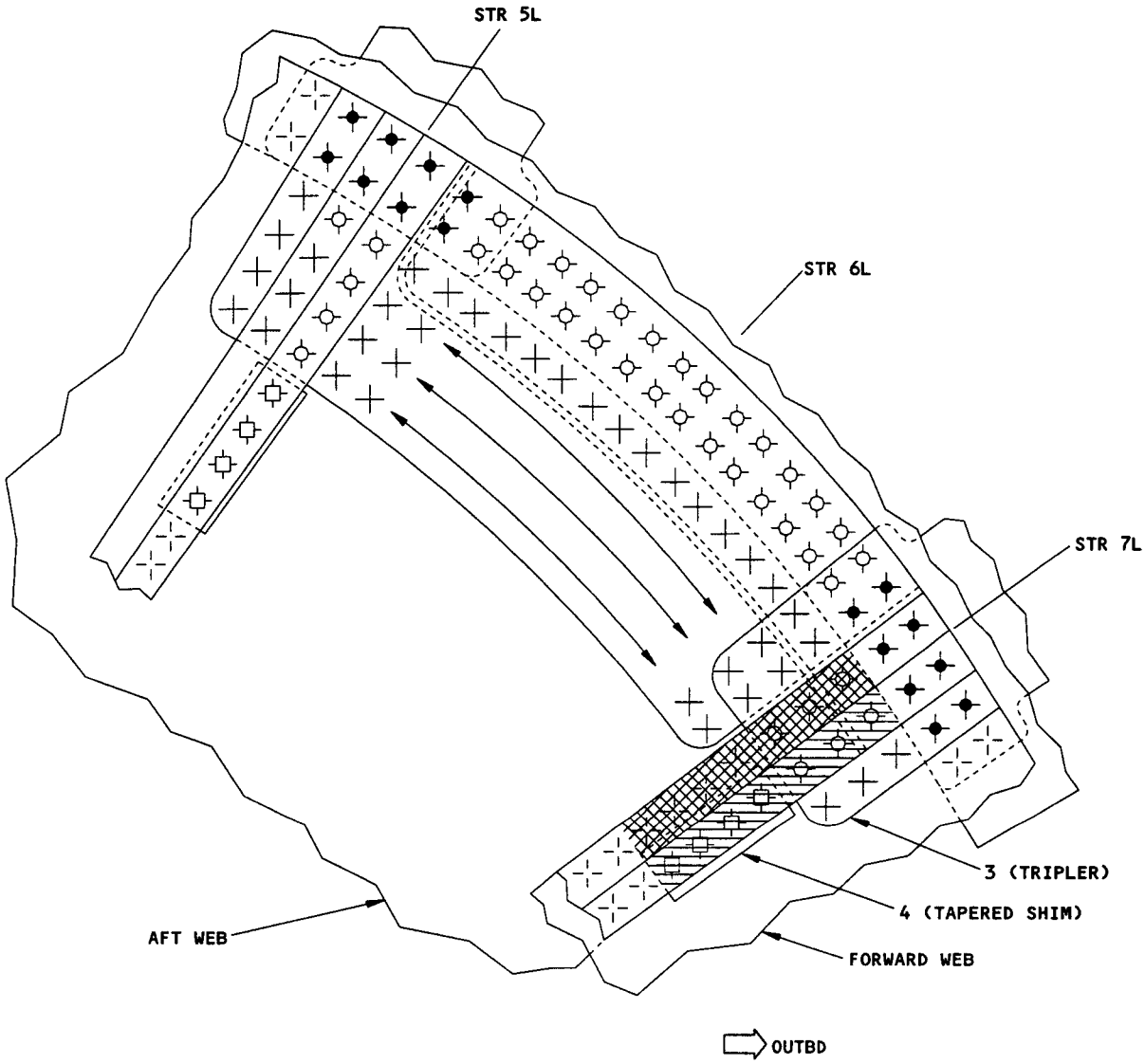

LFEC INSPECTION OF THE FORWARD WEB PER F-30C MUST BE DONE FROM THE AFT SIDE [B]

HFEC INSPECTION OF THE AFT WEB PER F-30D IS NOT AFFECTED

(LEFT SIDE IS SHOWN)
VIEW LOOKING AFT
DETAIL VI

STA 1016 Aft Pressure Bulkhead Web to "Y" Chord Attachment Crack Repair
Figure 15 (Sheet 9)

BOEING PROPRIETARY - Copyright © - Unpublished Work - See title page for details.

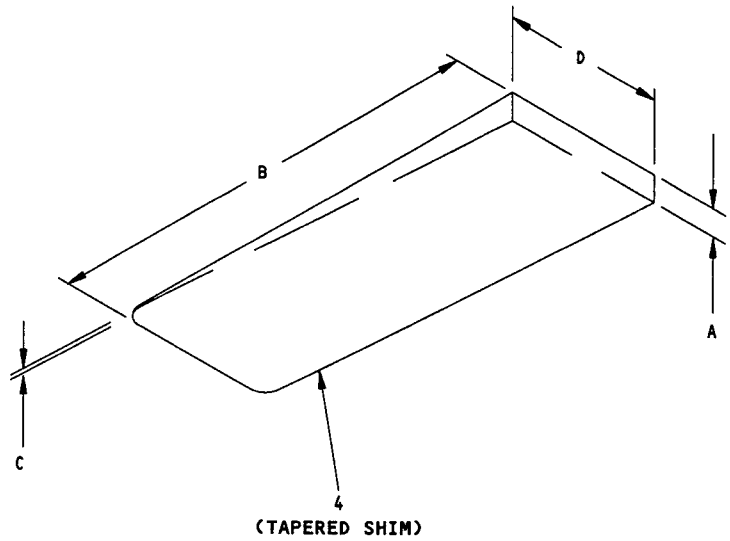

A = THICKNESS
B = 100 (A-C)
C = 0.01
D = 1.30

100:1 TAPER SHIM
DETAIL VII

STA 1016 Aft Pressure Bulkhead Web to "Y" Chord Attachment Crack Repair
Figure 15 (Sheet 10)

BOEING PROPRIETARY - Copyright © - Unpublished Work - See title page for details.

REPAIR INSTRUCTIONS

1. Get access to the damaged area.
2. Insert a piece of steel sheet between the frame assembly and the fuselage skin as necessary to protect the skin.
3. Cut and remove the portion of the initial outboard web flange and outboard chord flange that fastened to the fuselage skin as shown on Detail I and Section A-A. Take care not to damage the portion that has been removed.
4. Do a High Frequency Eddy Current inspection of the portion removed to make sure there are no cracks that extend beyond the joggle. Refer to NDT Part 6, 51-00-00 Figure 4.
5. If cracks, extend beyond the joggle contact Boeing with details of cracks.
6 Remove the initial filler and discard as shown on Detail I.
7. Make the repair parts as given in Table I and Detail II. Form the repair angle in the annealed condition then heat treat to 180,000 to 200,000 PSI. Extend the repair angle to pick up the fasteners as shown on Detail II. Refer to the requirements given in SRM 51-20-1 when you make the repair parts.
8. Assemble the repair parts.
9. Make sure that the repair angle fits the contour of the initial structure. Ensure 0.005 inch maximum gap prior to fastener installation. If the gap is more than 0.005 inch, use a shim. The maximum allowable gap limit is 0.040 before shimming. Refer to the requirements given in SRM 51-20-1 when you assemble the repair parts. Contact Boeing with details of any gap larger than 0.040 inch.
10. Drill the fastener holes.
11 Remove the repair parts.
12. Remove all nicks, scratches, gouges, burrs and sharp edges from repair parts. All cutout edges must have a surface smoothness of 63 micro-inches Ra or better. Refer to SRM 51-10-1.
13. Apply a chemical conversion coating to the aluminum repair parts and the bare surfaces of the initial parts. Refer to SRM 51-10-2.
14. Cadmium plate the Part 1 (Repair Angle). Refer to SOPM 20-42-05.
15. Apply two layers of BMS 10-11 Type I primer to the repair parts and the bare surfaces of the initial parts. Refer to SOPM 20-41-02.
16. Install the repair parts and the initial parts with BMS 5-95 sealant between the mating surfaces. Refer to SRM 51-20-4.
17. Install the fasteners wet with BMS 5-95 sealant. Refer to SRM 51-30.
18. Install all hi-loks common to the steel repair part in close ream holes.
19. Apply one layer of corrosion inhibiting compound to the interior surfaces of the repair area. Refer to SRM 51-10-2.

NOTES

- ALL DIMENSIONS ARE GIVEN IN INCHES UNLESS SHOWN DIFFERENTLY.
- KEEP A MINIMUM 0.25 INCH CUTOUT RADIUS.
- D = FASTENER DIAMETER
- KEEP A MINIMUM OF 2D EDGE MARGIN, UNLESS SHOWN DIFFERENTLY.
- WHEN YOU USE THIS REPAIR REFER TO:
  - AMM 51-21 FOR INTERIOR AND EXTERIOR FINISHES
  - NDT PART 6, 51-00-00 FOR THE HIGH FREQUENCY EDDY CURRENT PROCEDURES.
  - SOPM 20-41-02 FOR THE APPLICATION OF CHEMICAL AND SOLVENT RESISTANT FINISHES
  - SOPM 20-42-05 FOR BRIGHT CADMIUM PLATING
  - SRM 51-10-1 FOR INVESTIGATION AND CLEANUP OF DAMAGE
  - SRM 51-10-2 FOR PROTECTIVE TREATMENT OF METAL
  - SRM 51-20 FOR SHEET METAL MATERIALS
  - SRM 51-20-4 FOR REPAIR SEALING
  - SRM 51-30 FOR FASTENER CODE, REMOVAL, INSTALLATION, HOLE SIZES AND EDGE MARGINS.
  - SRM 51-30-8 FOR COUNTERSINKING AND COUNTERSINK WASHERS.

BS 188.0 Frame Repair at WL 207.0
Figure 16 (Sheet 1)

BOEING PROPRIETARY - Copyright © - Unpublished Work - See title page for details.

FASTENER SYMBOLS

REFERENCE FASTENER LOCATION.

INITIAL FASTENER LOCATION. INSTALL A BACB30MY6K()Y HEX DRIVE BOLT AND A BACC30R6 COLLAR

INITIAL FASTENER LOCATION. INSTALL A BACB30NW6K() HEX DRIVE BOLT AND A BACC30M6 COLLAR

INITIAL FASTENER LOCATION. INSTALL A BACB30NW6K()Y HEX DRIVE BOLT AND A BACC30R6 COLLAR.

INITIAL FASTENER LOCATION. INSTALL A BACB30MY6K()X HEX DRIVE BOLT AND A BACC30M6 COLLAR

INITIAL FASTENER LOCATION. INSTALL A BACB30MY8K()X HEX DRIVE BOLT AND A BACC30M8 COLLAR

INITIAL FASTENER LOCATION. INSTALL A BACB30MY8K()Y HEX DRIVE BOLT AND A BACC30R8 COLLAR

REPAIR MATERIAL			
PART		QTY	MATERIAL
1	ANGLE	1	0.04, 17-7PH CRES SHEET, HT TO 180,000 TO 200,000 PSI, SEE DETAIL II AND SECTION B-B FOR DIMENSION
2	FILLER	3	0.040, 2024-T3 OR 7075-T6 CLAD
3	TAPERED FILLER	1	0.040, 2024-T3 OR 7075-T6 CLAD, TAPER 50 TO 1
4	FILLER	2	0.125, 2024-T3 OR 7075-T6 CLAD
5	FILLER	1	0.050, 2024-T3 OR 7075-T6 CLAD

TABLE I

BS 188.0 Frame Repair at WL 207.0
Figure 16 (Sheet 2)

BOEING PROPRIETARY - Copyright © - Unpublished Work - See title page for details.

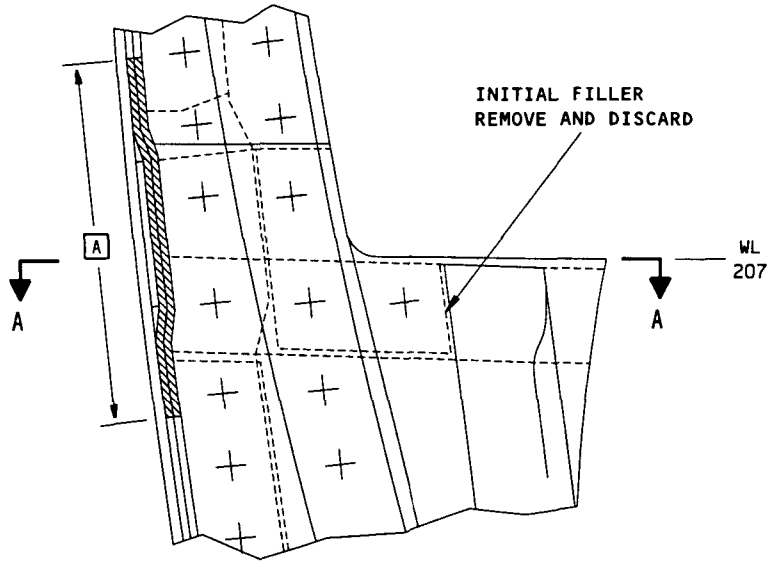

NOTES

[A] CUTOUT THE PORTION OF THE FRAME WEB FLANGE AND OUTER CHORD FLANGE THAT IS ATTACHED TO THE STRINGER AND THE SKIN AT APPROXIMATELY 0.50 INCH BEYOND THE JOGGLE AT EITHER END. KEEP A 2D MINIMUM EDGE DISTANCE ON FASTENERS COMMON TO THE SKIN.

DAMAGE REMOVAL FROM THE BS 188.0 FRAME CHORDS
DETAIL I

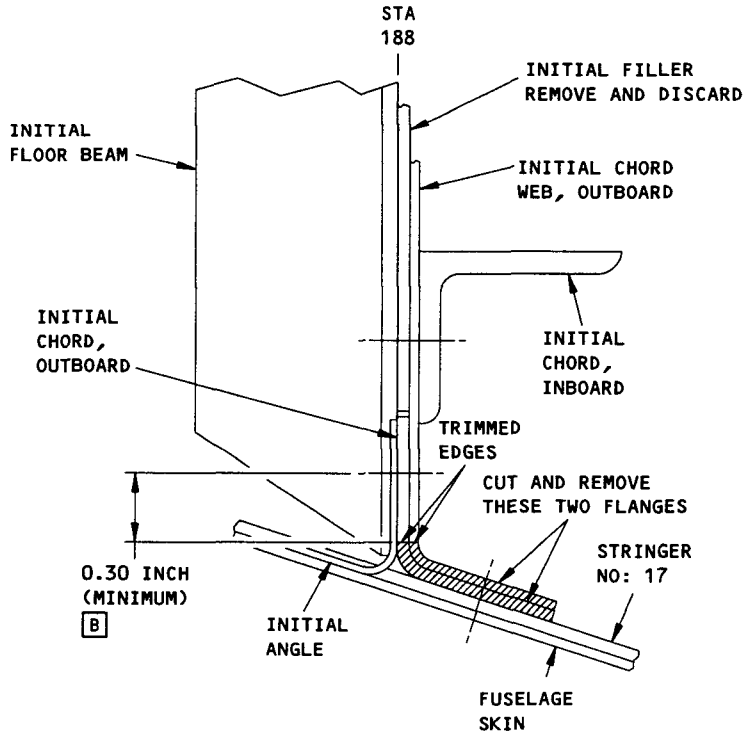

NOTES

[B] TRY TO MINIMIZE MATERIAL REMOVAL. IF THIS DIMENSION CAN NOT BE ACHIVED CONTACT BOEING WITH DETAILS.

ROTATED 90° COUNTERCLOCKWISE
SECTION A-A

BS 188.0 Frame Repair at WL 207.0
Figure 16 (Sheet 3)

BOEING PROPRIETARY - Copyright © - Unpublished Work - See title page for details.

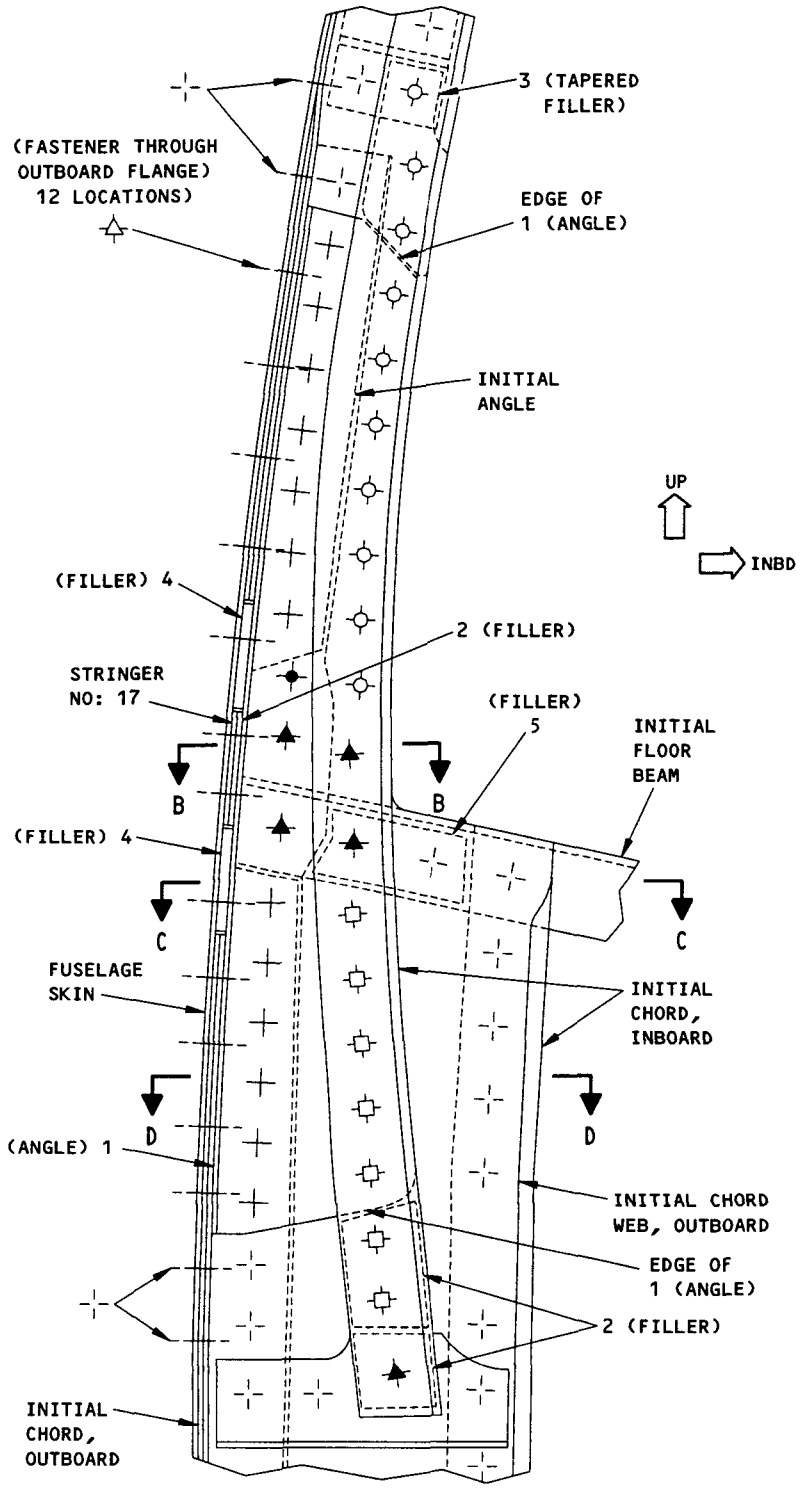

AFT SIDE OF THE FRAME LOOKING FORWARD
DETAIL II

BS 188.0 Frame Repair at WL 207.0
Figure 16 (Sheet 4)

BOEING PROPRIETARY - Copyright © - Unpublished Work - See title page for details.

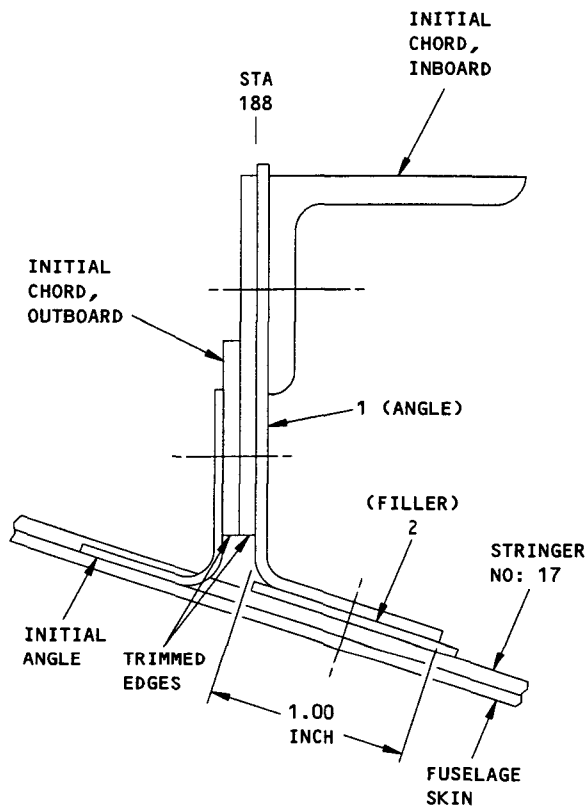

ROTATED 90° COUNTER CLOCKWISE

SECTION B-B

BS 188.0 Frame Repair at WL 207.0
Figure 16 (Sheet 5)

BOEING PROPRIETARY - Copyright © - Unpublished Work - See title page for details.

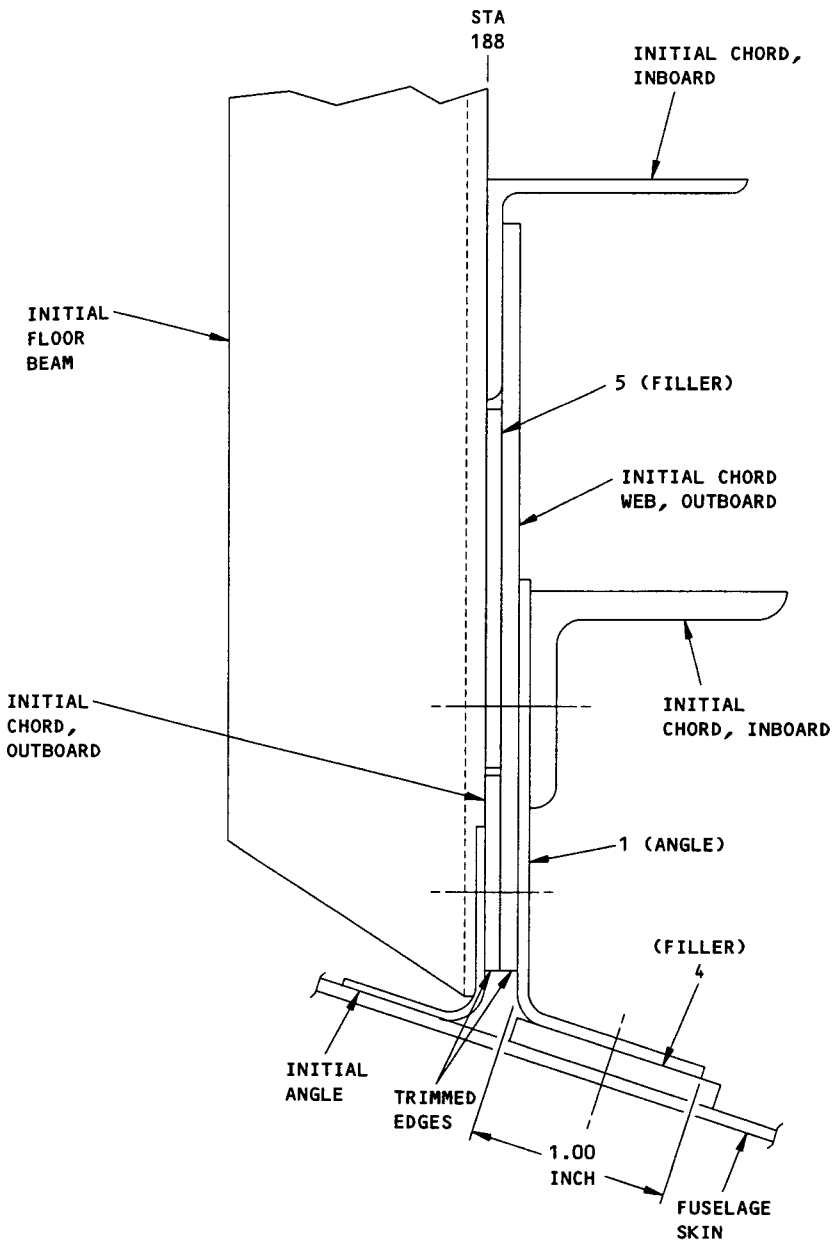

ROTATED 90° COUNTER CLOCKWISE

SECTION C-C

BS 188.0 Frame Repair at WL 207.0
Figure 16 (Sheet 6)

BOEING PROPRIETARY - Copyright © - Unpublished Work - See title page for details.

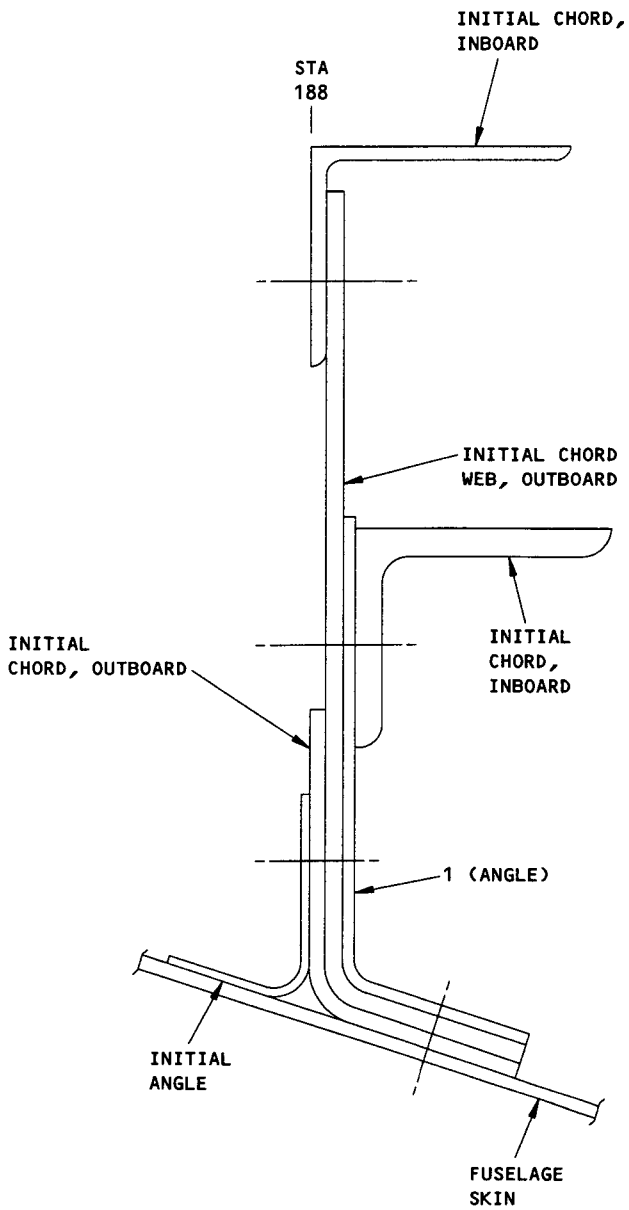

ROTATED 90° COUNTER CLOCKWISE

SECTION D-D

BS 188.0 Frame Repair at WL 207.0
Figure 16 (Sheet 7)

BOEING PROPRIETARY - Copyright © - Unpublished Work - See title page for details.

REPAIR INSTRUCTIONS

1. Cut the initial seat track as shown.
2. Extend holes in the upper chord of the floor beam to gain access to fasteners.
3. Add 0.327/0.313 inch diameter holes as necessary.
4. Apply a chemical conversion coating to the cut ends of the initial seat track and repair part [1] and finish with BMS 10-11, Type I primer.
5. Install the part [1] and all the fasteners.

NOTES

- THIS REPAIR IS APPLICABLE TO SEAT TRACKS MADE FROM BAC1520-841 OR BAC1520-1429 ON BL 0, BL 24.75 OR 45.50 AT STATIONS BS 563, 579, 603, 630 AND 679.
- THIS REPAIR COULD HAVE AN EFFECT ON A STRUCTURALLY SIGNIFICANT ITEM (SSI) GIVEN IN SRM 51-00-4, FIG. 3. BUT, NO CHANGE TO THE SUPPLEMENTAL STRUCTURAL INSPECTION DOCUMENT (SSID) INSPECTION PROGRAM IS NECESSARY.
- FINISH AS GIVEN IN AMM 53-42-11.
- REMOVE ALL SHARP EDGES AND BURRS ON HOLES, REPAIR PARTS AND INITIAL PARTS.
- REFER TO SRM 51-10-2 FOR PROTECTIVE TREATMENT OF METAL.

[A] CHAMFER 45 DEGREES X 0.06 INCH ENDS OF PART [1] AND THE INITIAL SECTION.

[B] APPLY A BRUSHCOAT OF BMS 5-95 TYPE A SEALANT TO THE REPAIR WASHER AND THE COUNTERSUNK AND PROTRUDING HEAD BOLTS BEFORE INSTALLATION.

[C] MAKE AND INSTALL A COUNTERSINK REPAIR WASHER AS GIVEN IN SRM 51-30-8, FIGURE 4.

[D] MAKE FROM SAME 7178-T6511 EXTRUSION AS THE INITIAL TRACK OR CUT FROM THE NEW TRACK.

FASTENER SYMBOLS

⊕ INITIAL 5/16 INCH DIAMETER BOLTS

◕ NEW 5/16 INCH DIAMETER BACB30LM-5 BOLT WITH NAS1905 NUT

REPAIR MATERIAL			
PART		QTY	MATERIAL
[1]	EXTRUSION	1	[D]
[2]	REPAIR WASHER	2	2024-T4

Seat Track Repair - Overwing
Figure 1 (Sheet 1)

BOEING PROPRIETARY - Copyright © - Unpublished Work - See title page for details.

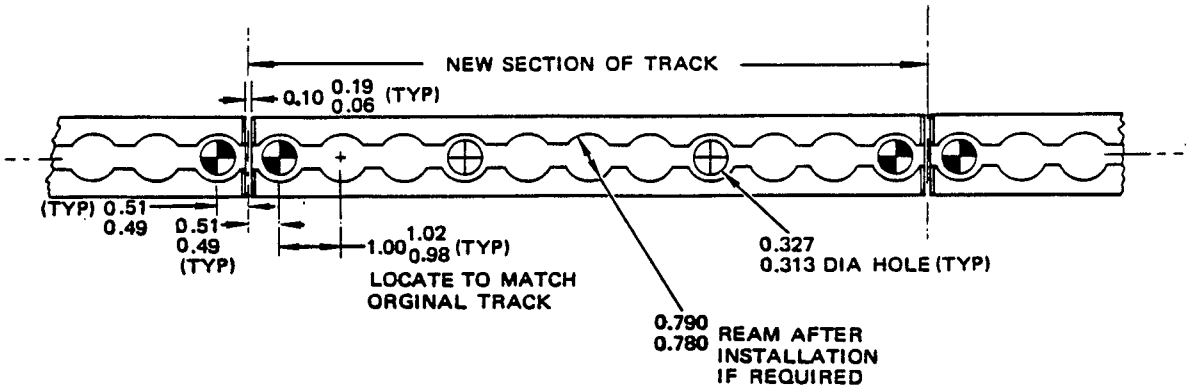

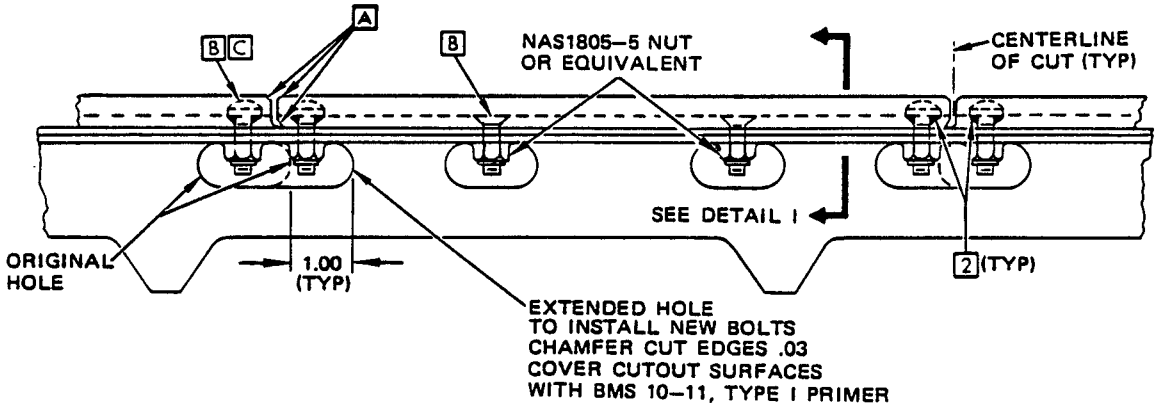

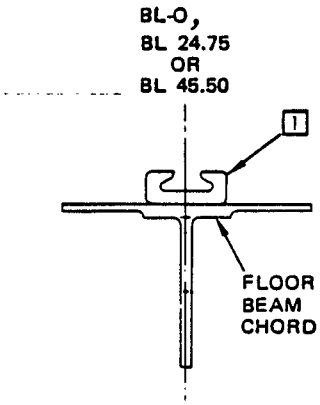

SECTION THROUGH REPAIR
DETAIL I

Seat Track Repair - Overwing
Figure 1 (Sheet 2)

REPAIR INSTRUCTIONS

1. Remove the floor panels as necessary.
2. Cut the seat track midway between the fasteners that attach it to the floor beam and remove the damage.
3. Make the repair parts.
4. Assemble the repair parts and drill the fastener holes.
5. Remove the repair parts.
6. Apply a chemical conversion coating to the raw edges, surfaces and fastener holes of initial and repair parts.
7. Install the repair parts.
8. Restore the finish.
9. Replace the floor panels.

NOTES

- THIS REPAIR WILL NOT HAVE AN EFFECT ON A STRUCTURALLY SIGNIFICANT ITEM (SSI) GIVEN IN SRM 51-00-4, FIG. 3. THUS, NO CHANGE TO THE SUPPLEMENTAL STRUCTURAL INSPECTION DOCUMENT (SSID) INSPECTION PROGRAM IS NECESSARY.

  WHEN YOU DO THIS REPAIR, REFER TO:

  - AMM 53-42-11 FOR PASSENGER SEAT TRACKS CLEANING AND PAINTING
  - SRM 51-30-0 FOR FASTENER CODE, REMOVAL, INSTALLATION, HOLE SIZES AND EDGE MARGINS
  - SRM 51-10-2 FOR PROTECTIVE TREATMENT OF METAL.
- A SPLICE MAY BE MADE ON ANY FLOOR BEAM.
- NUMBER OF FASTENERS SHOWN IS THE MINIMUM REQUIRED ON EACH SIDE OF THE FLOOR BEAM.
- BREAK THE SHARP EDGES OF INITIAL AND REPAIR PARTS 0.015 TO 0.030 INCH.
- THIS REPAIR IS DESIGNED FOR TRACKS MADE FROM BAC1520-792 EXTRUSIONS AT THE FOLLOWING LOCATIONS:

  737-100 AIRPLANES

  - FORWARD OF FUS STA 540 AT BL 24.75 AND BL 45.50 (LEFT AND RIGHT SIDES) AND AT BL 50.50 BETWEEN FUS STA 328 AND FUS STA 360
  - BETWEEN FUS STA 767 AND FUS STA 947.50 AT BL 24.75 AND BL 45.50 (LEFT AND RIGHT SIDES)

  737-200 AIRPLANES

  - FORWARD OF FUS STA 540 AT BL 24.75 AND BL 45.50 (LEFT AND RIGHT SIDES) AND AT BL 55.50 BETWEEN FUS STA 328 AND FUS STA 360
  - BETWEEN FUS STA 767 AND FUS STA 947.50 AT BL 24.75 AND BL 45.50 (LEFT AND RIGHT SIDES)

  737-200C AIRPLANES

  - BETWEEN FUS STA 510 AND FUS STA 540 AT BL 0.00 AND BETWEEN FUS STA 986.50 AND FUS STA 1016 AT BL 17.61 AND BL 38.36 (RIGHT SIDE ONLY)

[A] PUT THE REPAIR FASTENERS A MINIMUM OF 4D FROM FLOOR PANEL FASTENERS.

[B] PARTS [2] AND [3] ARE NOT REQUIRED FORWARD OF FUSELAGE STATION 540.

[C] CHAMFER 0.06 INCH X 45°

[D] APPLY A BRUSH LAYER OF BMS 5-95, CLASS A SEALANT TO THE UNDERSIDE OF THE FASTENER HEAD BEFORE THE INSTALLATION.

[E] FILL WITH BMS 5-95, CLASS B SEALANT.

Seat Track Repair - Preferred
Figure 2 (Sheet 1)

BOEING PROPRIETARY - Copyright © - Unpublished Work - See title page for details.

NOTE (CONTINUED)

[F] THIS PART MAY BE OBTAINED FROM THE BOEING COMPANY SPARE PART DEPARTMENT.

[G] TYPICAL TRIM FORWARD OF FUSELAGE STATION 540.

REPAIR MATERIAL							
LOCATION →				BOEING PART NO.			
PART		QTY	MATERIAL	QTY	MATERIAL	QTY	MATERIAL
[1]	EXTRU-SION	1	BAC1520-792 7178-T6 [F]				
[2]	EXTRU-SION	1	BAC1505-100538 7178-T6511		69-36617 [F]		
[3]	SHEET	1	0.032 CRS301 1/2 HARD MIL-S-5059				
[4]	RADIUS FILLER		0.125 7178-T6 or 7075-T6				

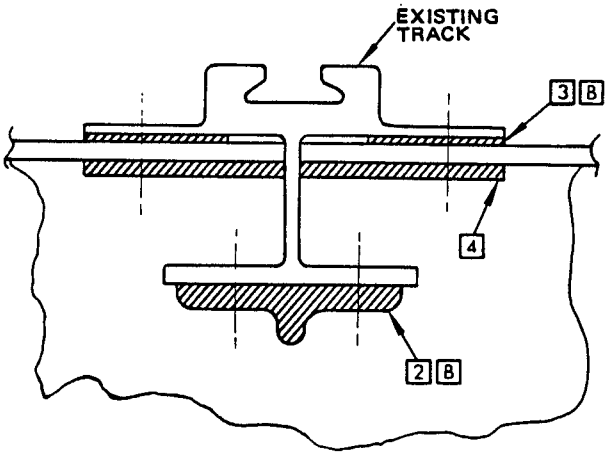

SECTION THROUGH REPAIR
DETAIL I

Seat Track Repair - Preferred
Figure 2 (Sheet 2)

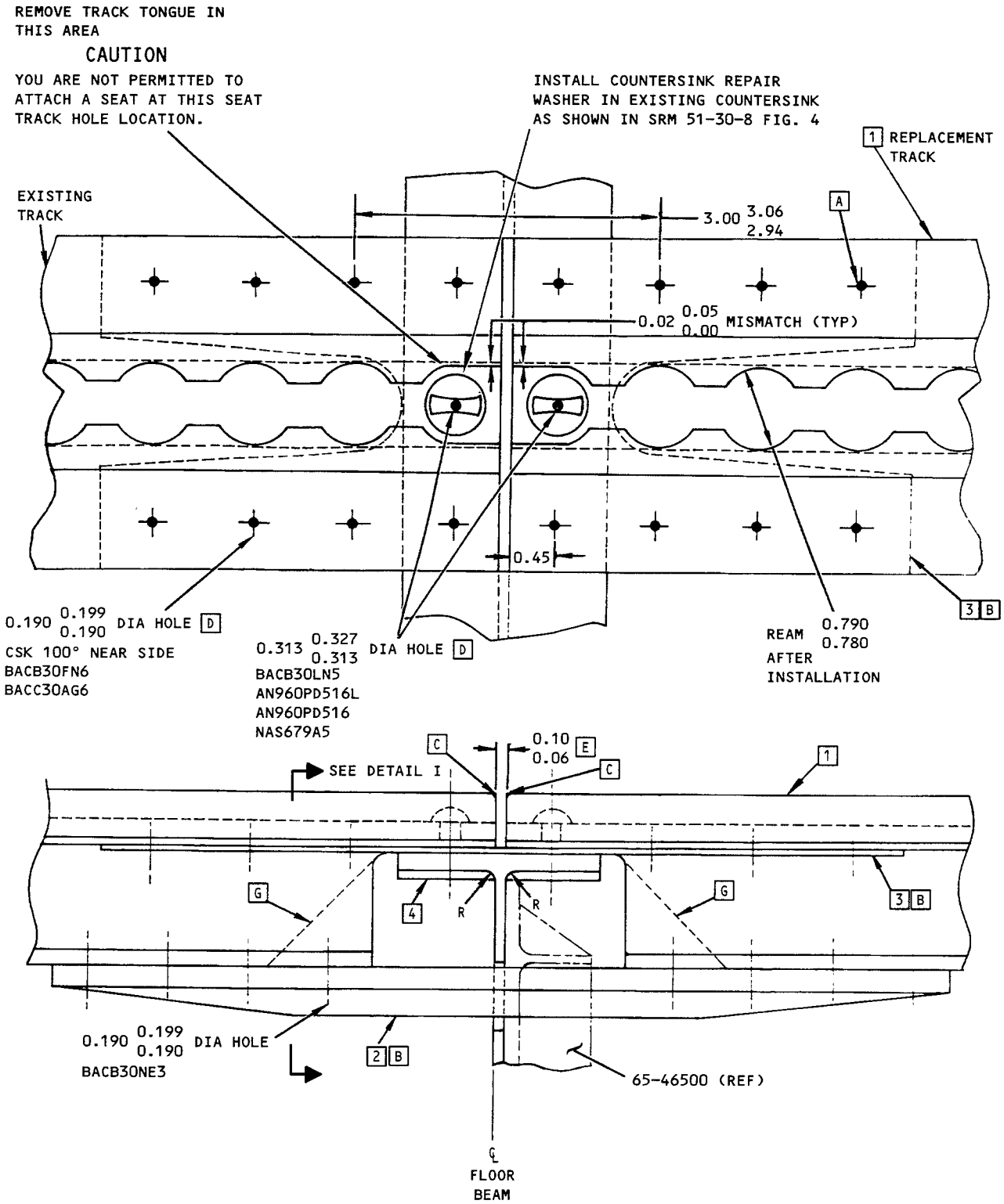

Seat Track Repair - Preferred
Figure 2 (Sheet 3)

BOEING PROPRIETARY - Copyright © - Unpublished Work - See title page for details.

REPAIR INSTRUCTIONS

1. Remove the floor panels as required.
2. Remove the splice tee from lower chord of track where necessary.
3. Remove the damaged section of the seat track by making cuts 9.45 inches from a frame station as shown in the illustration.
4. Make the parts, drill and countersink holes as necessary.
5. Break the sharp edges of initial and repair parts 0.015 to 0.030 inch.
6. Apply a chemical conversion coating to all repair parts, the ends of the initial extrusion and fastener holes.
7. Install the new track section and make splices between frames as shown.
8. Install the lower chord splice tee again if applicable.
9. Apply the finish and install the floor panels.

NOTES

- THIS REPAIR WILL NOT HAVE AN EFFECT ON A STRUCTURALLY SIGNIFICANT ITEM (SSI) GIVEN IN SRM 51-00-4, FIG. 3. THUS, NO CHANGE TO THE SUPPLEMENTAL STRUCTURAL INSPECTION DOCUMENT (SSID) INSPECTION PROGRAM IS NECESSARY.
- THIS REPAIR IS DESIGNED FOR TRACKS MADE FROM BAC1520-792 EXTRUSION AT THE FOLLOWING LOCATIONS:

  737-100 AIRPLANES
  FORWARD OF BODY STATION 520 AND AFT OF BODY STATION 767 AT BL 24.75 AND 45.50 (LEFT AND RIGHT SIDES)

  737-200 AIRPLANES
  FORWARD OF BODY STATION 520 AND AFT OF BODY STATION 767 AT BL 24.75 AND 45.50 (LEFT AND RIGHT SIDES)

  737-200C AIRPLANES
  BETWEEN BODY STATIONS 510 AND 540 ON BL "0" AND BETWEEN BODY STATIONS 985 AND 1016 AT BL 24.75 AND 45.50 (RIGHT SIDE ONLY).

- A SPLICE CAN BE MADE BETWEEN ALL PAIRS OF ADJACENT FLOOR BEAMS.
- NUMBER OF FASTENERS SHOWN IS THE MINIMUM FOR EACH SIDE OF CENTERLINE OF CUT.
- WHEN YOU DO THIS REPAIR, REFER TO:
  - AMM 53-42-11 FOR THE INTERNAL AND EXTERNAL FINISHES
  - SRM 51-10-2 FOR PROTECTIVE TREATMENT OF METAL
  - SRM 51-30-0 FOR FASTENER CODE, REMOVAL, INSTALLATION, HOLE SIZES AND EDGE MARGINS.

[A] REPAIR FASTENERS IN UPPER CHORD MUST BE POSITIONED TO AVOID FLOOR PANEL ATTACHMENTS.

[B] APPLY A BRUSH COAT OF BMS 5-26, CLASS A SEALANT TO THE UNDERSIDE OF THE FASTENER HEAD BEFORE INSTALLATION.

[C] APPLY BMS 5-95, CLASS B SEALANT.

[D] THIS PART IS USED IN THE AFT BODY ONLY.

[E] THIS TRIM IS USED IN THE FORWARD BODY ON PASSENGER AIRPLANES.

[F] TRIM TO FIT GAP ON CARGO AIRPLANES ONLY 0.08 X 0.08 X 1.00 INCH.

FASTENER SYMBOLS

+ INITIAL FASTENER LOCATION

-+- REPAIR FASTENER LOCATION

Seat Track Optional Repair
Figure 3 (Sheet 1)

BOEING PROPRIETARY - Copyright © - Unpublished Work - See title page for details.

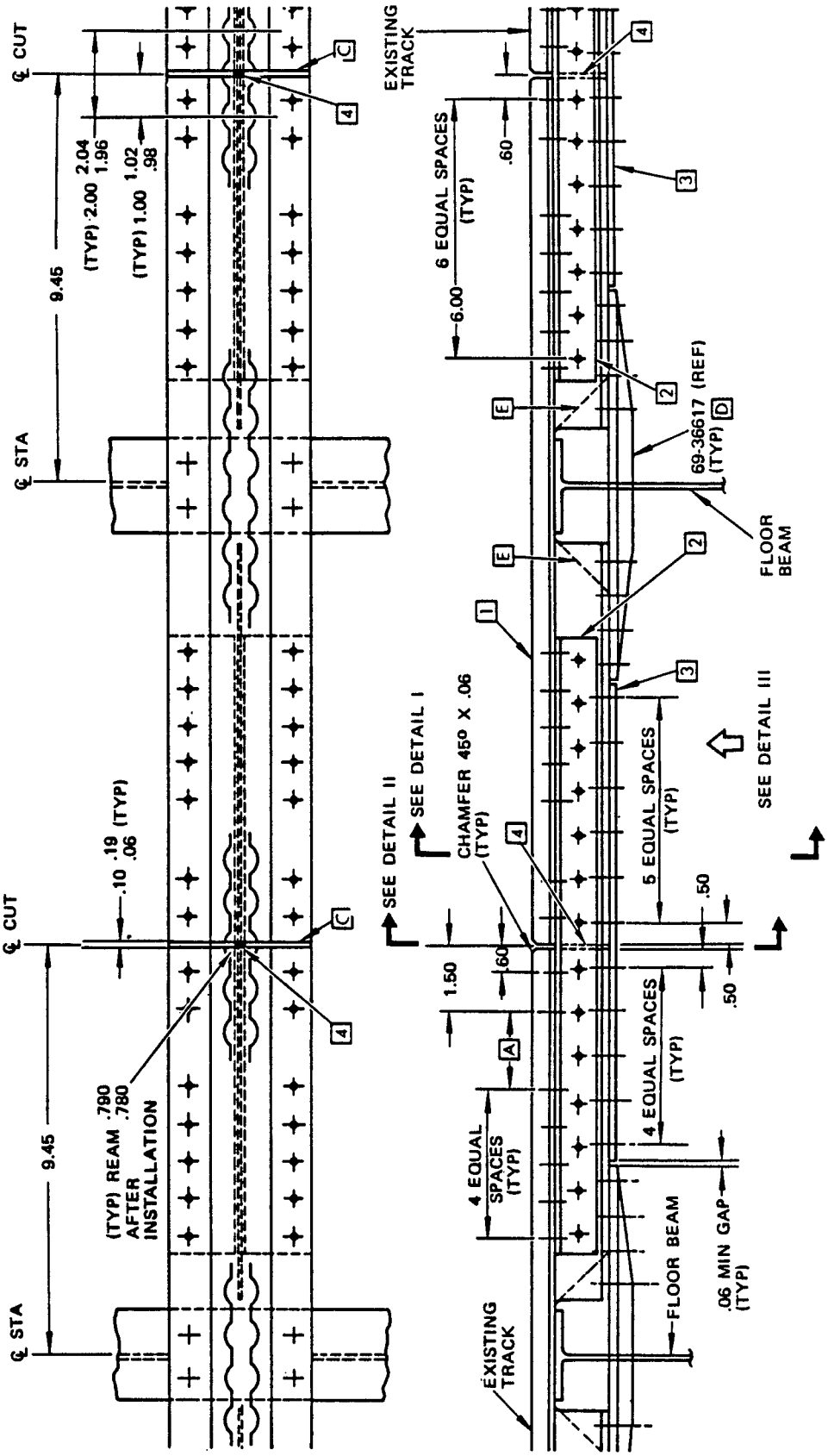

Seat Track Optional Repair
Figure 3 (Sheet 2 of 3)

REPAIR MATERIAL			
PART		QTY	MATERIAL
1	EXTR	1	BAC1520–792 7178–T6
2	EXTR	2	AND10134–1601 7178–T6
3	PLATE	2	0.200 X 7178–T6 OR 0.250 X 7075–T6
4	SEAL PLUG	1	2024–T3, T4 OR 7075–T6 F

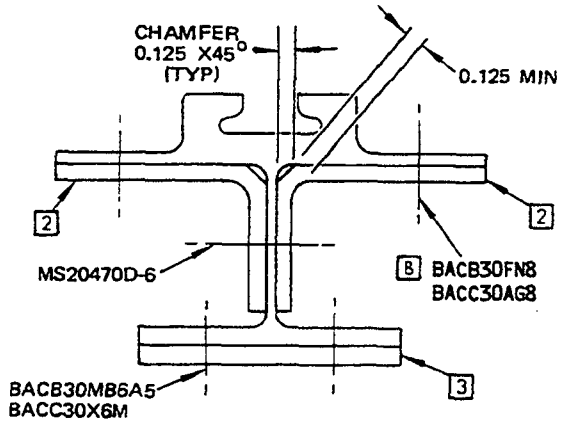

DETAIL I

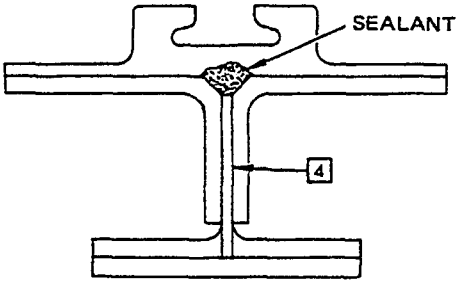

DETAIL II

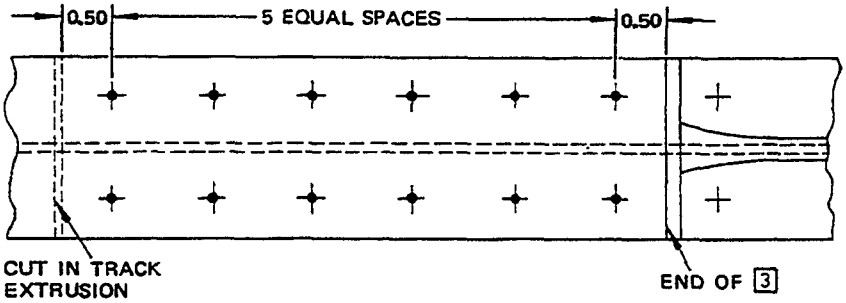

DETAIL III

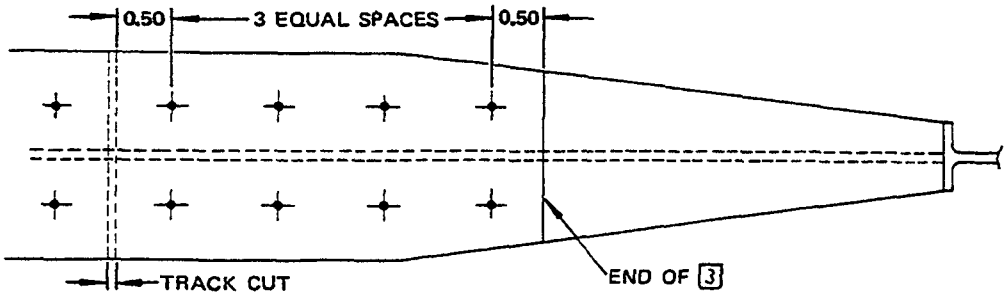

ALTERNATIVE DETAIL III
WHERE BOTTOM FLANGE IS TAPERED

Seat Track Optional Repair
Figure 3 (Sheet 3)

REPAIR INSTRUCTIONS

1. Remove the floor panels.
2. Remove the damaged portion of the track by making a cut on the centerline of each frame station.
3. Remove the clip, if required.
4. Make the parts [1], [2], [3] and [4].
5. Install the repair parts and drill and countersink the fastener holes as necessary.
6. Trim the standing leg of the clip to accommodate part [3] as shown.
7. Apply a chemical conversion coating to the cut and trimmed parts, and the drilled and countersunk holes.
8. Install the parts and fasteners.
9. Restore the finish and install the floor panels.

NOTES

- THIS REPAIR IS APPLICABLE TO THE FORWARD AND AFT CARGO DECKS WITH CONTINUOUS TRACKS.
- THIS REPAIR WILL NOT HAVE AN EFFECT ON A STRUCTURALLY SIGNIFICANT ITEM (SSI) GIVEN IN SRM 51-00-4, FIG. 3. THUS, NO CHANGE TO THE SUPPLEMENTAL STRUCTURAL INSPECTION DOCUMENT (SSID) INSPECTION PROGRAM IS NECESSARY.
- A REPAIR MAY BE MADE ON ALL PAIRS OF ADJACENT FRAMES.
- BREAK THE SHARP EDGES OF THE INITIAL REPAIR PARTS 0.015 TO 0.030 INCH. REMOVE ALL THE NICKS, SCRATCHES, BURRS, SHARP EDGES AND CORNERS FROM THE INITIAL AND REPAIR PARTS.
- THE NUMBER OF FASTENERS SHOWN IS THE MINIMUM NUMBER NECESSARY ON EACH SIDE OF THE CUT.
- WHEN YOU DO THIS REPAIR, REFER TO:
  - AMM 53-42-11 FOR REFINISHING
  - SRM 51-30-0 FOR FASTENER CODE, REMOVAL, INSTALLATION, HOLES SIZES AND EDGE MARGINS.

[A] CHAMFER 0.06 INCH X 45° ENDS OF INITIAL AND NEW EXTRUSION.

[B] APPLY A BRUSH LAYER OF BMS 5-95, CLASS A SEALANT TO UNDERSIDE OF FASTENER HEADS BEFORE INSTALLATION.

[C] BMS 5-95, CLASS B SEALANT

[D] PROCURE FROM BOEING COMPANY SPARE PARTS DEPARTMENT.

FASTENER SYMBOLS

+ INITIAL FASTENER LOCATIONS

⊕ REPAIR FASTENER LOCATIONS

REPAIR MATERIAL			
PART		QTY	MATERIAL
1	TRACK EXTR	1	BAC1520-843 7178-T6 [D]
2	STRAP	2	0.25 INCH THICK 7178-T6
3	EXTRUDED ANGLE	2	MAKE FROM AND10133-1601 0.094 INCH THICK 7178-T6
4	FILLER	2	0.08 INCH THICK 2024-T3

Cargo Track Repair at Frame
Figure 4 (Sheet 1)

BOEING PROPRIETARY - Copyright © - Unpublished Work - See title page for details.

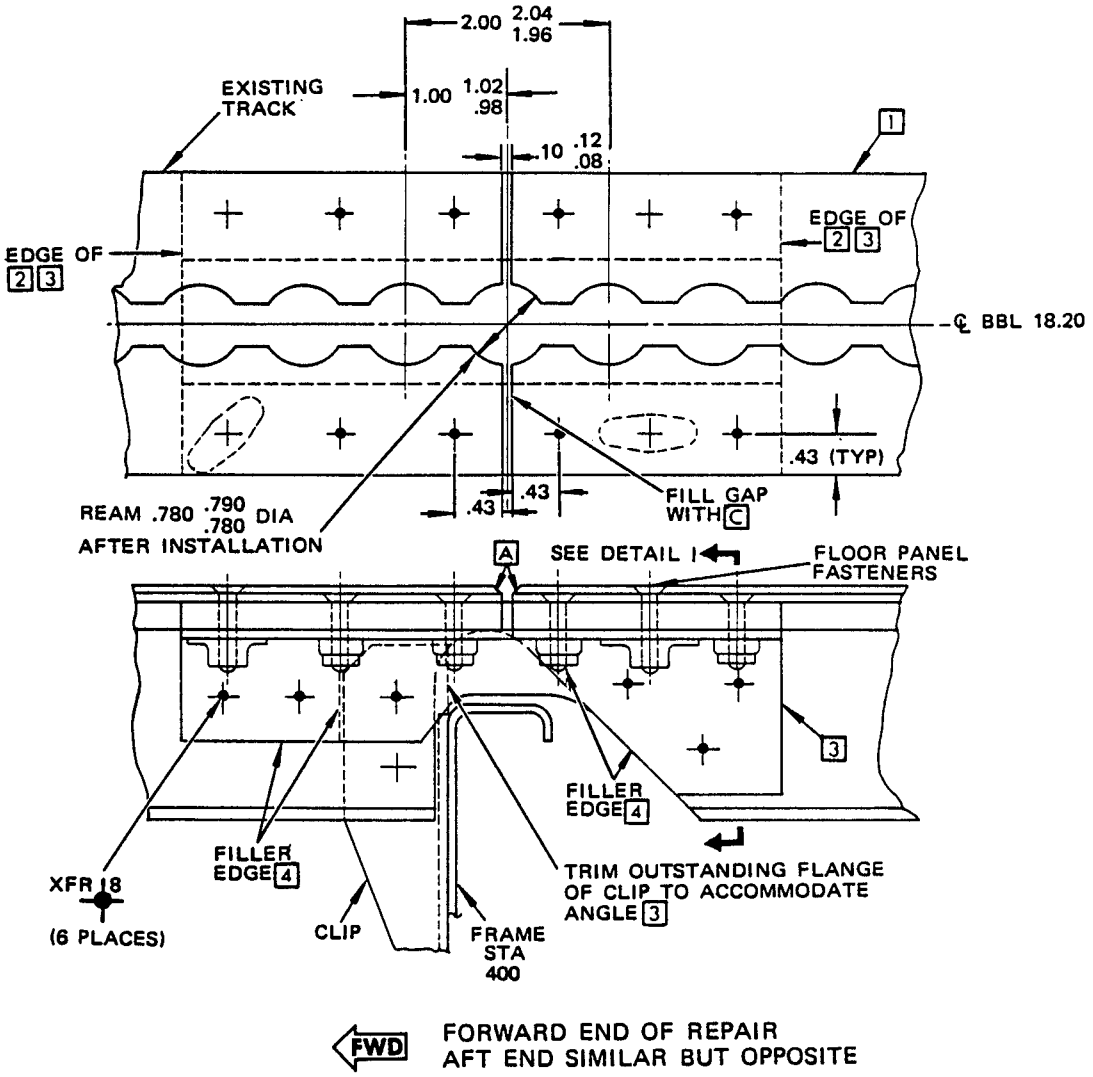

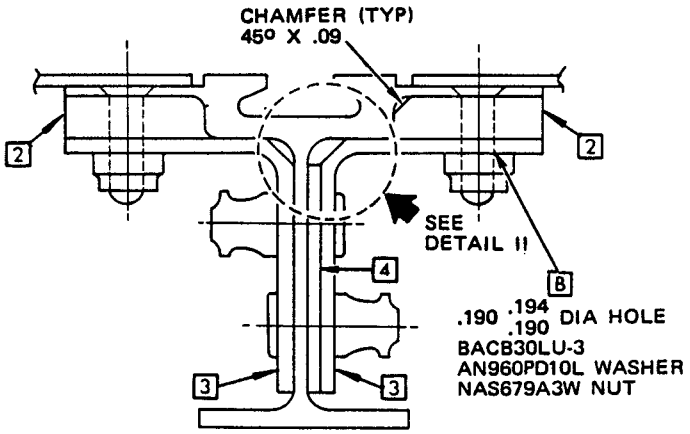

DETAIL I

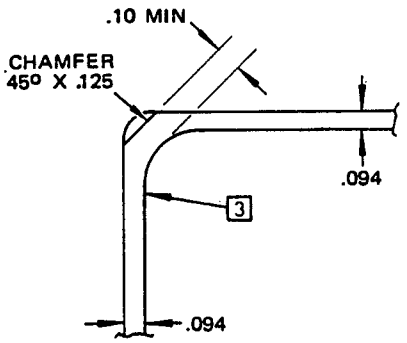

DETAIL II

Cargo Track Repair at Frame
Figure 4 (Sheet 2 of 2)

REPAIR INSTRUCTIONS

1. Remove the floor panels as necessary to gain access.
2. Cut out the damaged portion of the track. Make the cuts as shown between the panel fastener holes. One repair can be made between all pairs of adjacent frames.
3. Apply a chemical conversion coating to all the repair parts and cut ends of the initial extrusion.
4. Prefit the repair parts and drill the holes to match the floor panel attachment holes.
5. Assemble nutplates NAS686A3 on part [2] for panel fasteners.
6. Install repair parts.

NOTES

- THIS REPAIR WILL NOT HAVE AN EFFECT ON A STRUCTURALLY SIGNIFICANT ITEM (SSI) GIVEN IN SRM 51-00-4, FIG. 3. THUS, NO CHANGE TO THE SUPPLEMENTAL STRUCTURAL INSPECTION DOCUMENT (SSID) INSPECTION PROGRAM IS NECESSARY.
- THIS REPAIR IS APPLICABLE TO THE FORWARD AND AFT CARGO DECKS WITH CONTINUOUS TRACKS AND MAY BE USED BETWEEN ANY PAIR OF ADJACENT FRAMES.
- THE NUMBER OF FASTENERS SHOWN SECURING REPAIR PARTS TO EXISTING SEAT TRACK IS THE THE MINIMUM REQUIRED AT EACH END OF THE REPAIR.
- BREAK THE SHARP EDGES OF THE INITIALAND REPAIR PARTS 0.015 TO 0.030 INCH.
- REMOVE ALL NICKS, SCRATCHES, BURRS, SHARP EDGES AND CORNERS FROM THE INITIAL AND REPAIR PARTS.
- WHEN YOU DO THIS REPAIR, REFER TO:
  - AMM 53-42-11 FOR TRACK FINISHING
  - SRM 51-10-2 FOR PROTECTIVE TREATMENT OF METAL
  - SRM 51-30-0 FOR FASTENER CODE, REMOVAL, INSTALLATION, HOLE SIZES AND EDGE MARGINS.

[A] CHAMFER 0.06 INCH X 45° ENDS OF INITIAL AND NEW EXTRUSION.

[B] APPLY A BRUSH LAYER OF BMS 5-95, CLASS A SEALANT TO UNDERSIDE OF FASTENER HEADS BEFORE INSTALLATION.

[C] PROCURE FROM BOEING COMPANY SPARE PARTS DEPARTMENT.

FASTENER SYMBOLS

+ INITIAL FASTENER LOCATIONS

-✦- REPAIR FASTENER LOCATIONS

REPAIR MATERIAL			
PART		QTY	MATERIAL
[1]	TRACK EXTRUSION	1	BAC1520-843 7178-T6 OR 65-9927-117 [C]
[2]	CHANNEL EXTRUSION	2	AND10137-1609 7178-T6
[3]	STRAP	2	0.25 INCH THICK 2024-T4

Cargo Track Repair Between Frames
Figure 5 (Sheet 1)

BOEING PROPRIETARY - Copyright © - Unpublished Work - See title page for details.

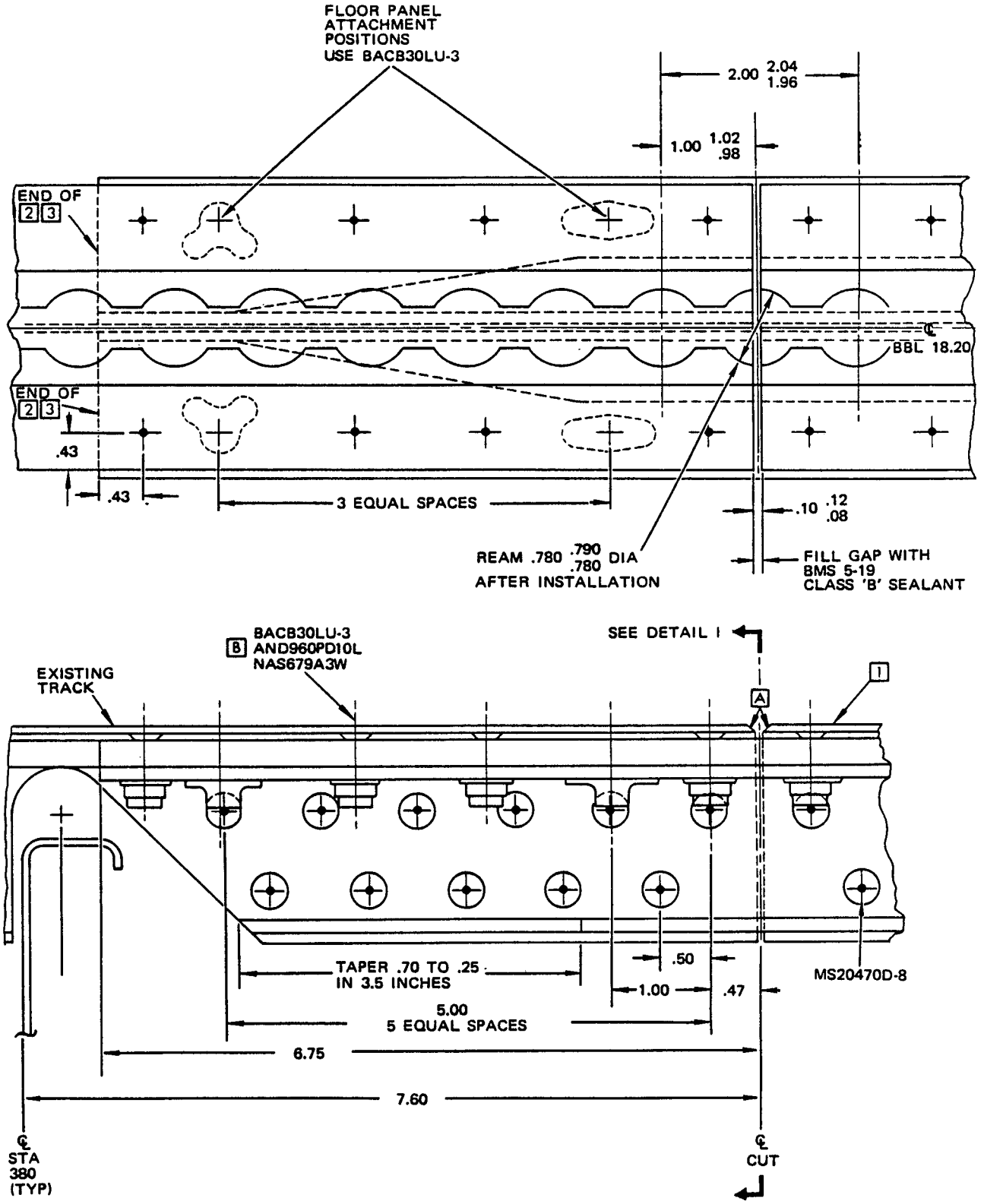

Cargo Track Repair Between Frames
Figure 5 (Sheet 2 of 3)

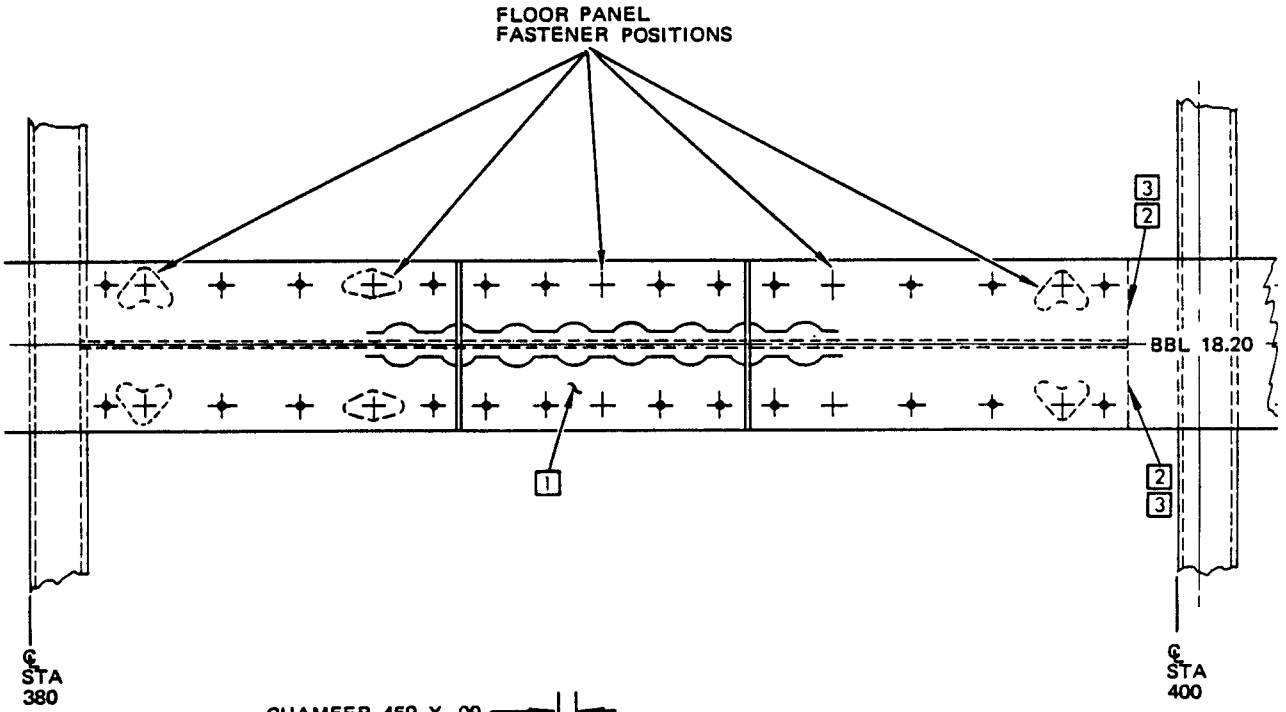
FLOOR PANEL
FASTENER POSITIONS
3
2
BBL 18.20
1
2
3
℄
STA
380
℄
STA
400

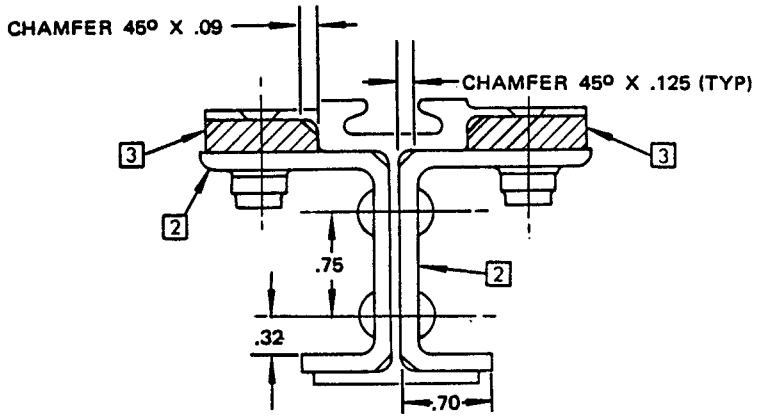
CHAMFER 45° X .09
CHAMFER 45° X .125 (TYP)
3
3
2
2
.75
.32
.70

DETAIL I

REPAIR INSTRUCTIONS

1. Remove the floor panels as necessary to gain access to the repair area.
2. Cut out the damaged portion of the beam and remove the floor panel fasteners and nutplates if necessary to permit the necessary repair angles.
3. Remove the dents, scratches, burrs, gouges and sharp edges from the trimmed initial parts.
4. Prefit the repair parts and drill all the holes.
5. Apply a chemical conversion coating to the cut edges and fastener holes of the initial and repair parts.
6. Assemble the nutplates on part 1 to match the floor fastener hole location.
7. Install the repair parts.
8. Apply the finish and put the floor panels back to their initial condition.

NOTES

- THIS REPAIR IS APPLICABLE TO THE FLOOR BEAMS IN THE FORWARD AND AFT CARGO COMPARTMENTS.
- THIS REPAIR WILL NOT HAVE AN EFFECT ON A STRUCTURALLY SIGNIFICANT ITEM (SSI) GIVEN IN SRM 51-00-4, FIG. 3. THUS, NO CHANGE TO THE SUPPLEMENTAL STRUCTURAL INSPECTION DOCUMENT (SSID) INSPECTION PROGRAM IS NECESSARY.
- WHEN YOU DO THIS REPAIR, REFER TO:
  - AMM 51-21-0 FOR REFINISHING
  - SRM 51-10-2 FOR PROTECTIVE TREATMENT OF METAL
  - SRM 51-30-0 FOR FASTENER CODE, REMOVAL, INSTALLATION, HOLE SIZES AND EDGE MARGINS.
- BREAK THE SHARP EDGES OF THE INITIAL AND REPAIR PARTS 0.015 TO 0.030 INCH.

[A] 0.063 INCH THICK CLAD 7075-O. HT-T6 OPTIONAL.

FASTENER SYMBOLS

REPAIR FASTENER LOCATIONS

REPAIR MATERIAL			
PART		QTY	MATERIAL
1	CHANNEL FILLER	1	BAC1509-100146 7075-T6 [A]
2	ANGLE	1	0.080 INCH THICK CLAD 7075-O HT-T6
3	ANGLE	1	0.071 INCH THICK CLAD 7075-O HT-T6

Cargo Floor Beam Repair
Figure 6 (Sheet 1)

BOEING PROPRIETARY - Copyright © - Unpublished Work - See title page for details.

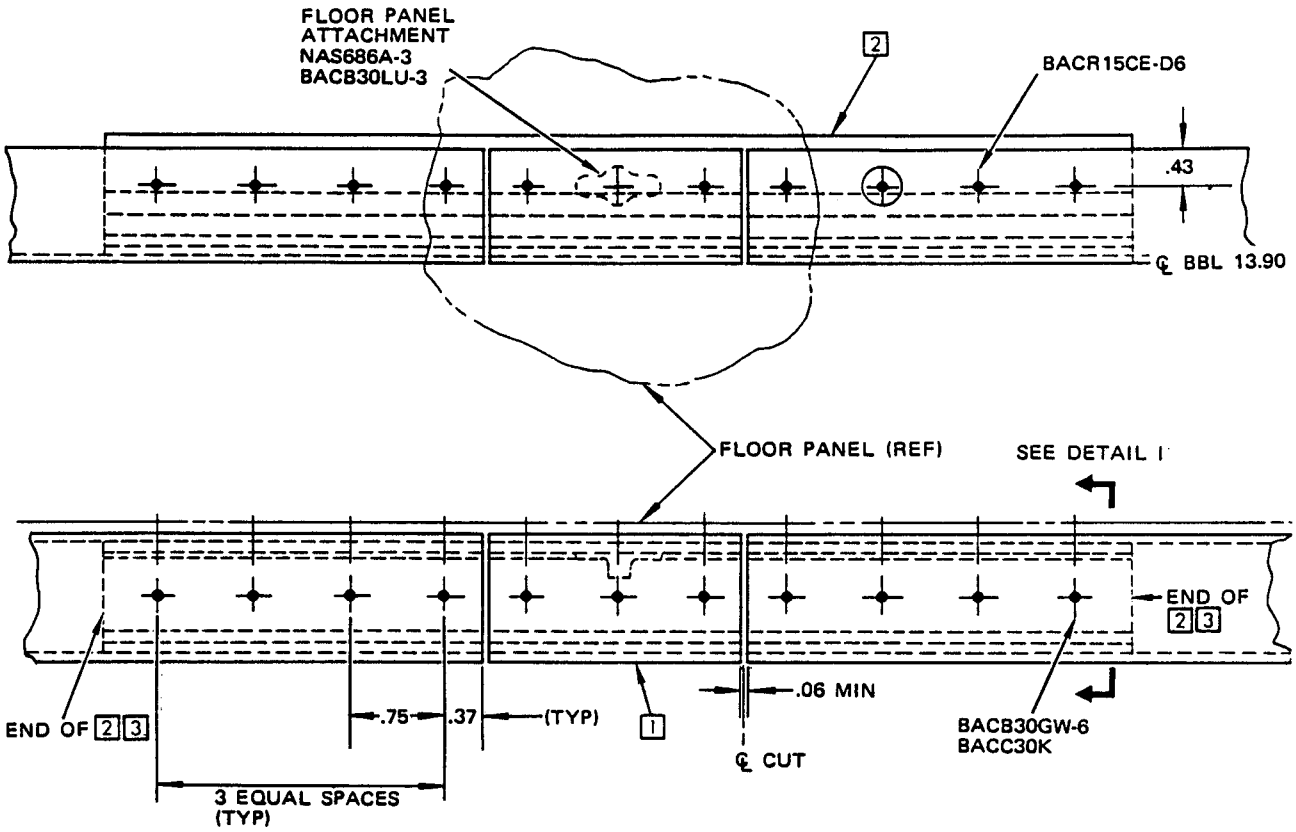
FLOOR PANEL
ATTACHMENT
NAS686A-3
BACB30LU-3
2
BACR15CE-D6
.43
℄ BBL 13.90
FLOOR PANEL (REF)
SEE DETAIL I
END OF
2 3
END OF 2 3
.75
.37
(TYP)
1
.06 MIN
℄ CUT
BACB30GW-6
BACC30K
3 EQUAL SPACES
(TYP)

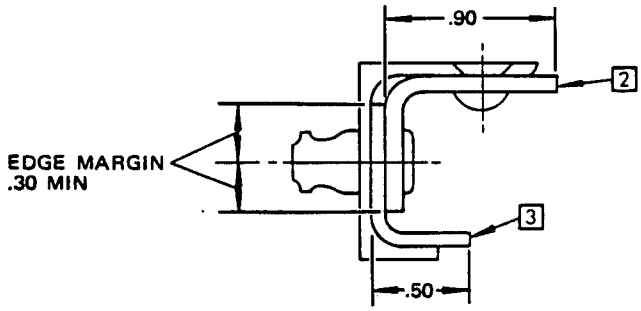
.90
2
EDGE MARGIN
.30 MIN
3
.50

DETAIL I

REPAIR INSTRUCTIONS

1. Remove the floor panel.
2. Remove the foam filler between the track and the crease beam over the area to be repaired to expose the rivet heads.
3. Cut and remove the damaged portion of the track. The cut line must be situated between the fasteners attaching the track to a floor beam.
4. Make the repair parts.
5. Assemble the repair parts and drill and ream the fastener holes.
6. Remove the repair parts.
7. Apply a chemical conversion coating to the repair parts and the cut edges of the initial track.
8. Install the repair parts.
9. Fill the joint in the track extrusion with BMS 5-95, Class B sealant.
10. Restore the finish. Install a new section of foam filler and seal it with BMS 5-95, Class B. The strap (part [2]) takes the place of the foam filler at the track joint.
11. Replace the floor panel.

NOTES

- THIS REPAIR APPLIES TO PASSENGER/CARGO SEAT TRACKS MADE FROM BAC1520-1430 EXTRUSION.
- THIS REPAIR WILL NOT HAVE AN EFFECT ON A STRUCTURALLY SIGNIFICANT ITEM (SSI) GIVEN IN SRM 51-00-4, FIG. 3. THUS, NO CHANGE TO THE SUPPLEMENTAL STRUCTURAL INSPECTION DOCUMENT (SSID) INSPECTION PROGRAM IS NECESSARY.
- TO REPAIR A SECTION OF SEAT TRACK, TWO SPLICES WILL BE REQUIRED UNLESS AN EXISTING JOINT IS TO BE USED.
- BREAK SHARP EDGES OF INITIAL AND REPAIR PARTS 0.015 TO 0.030 INCH.
- REMOVE ALL NICKS, SCRATCHES, BURRS, SHARP EDGES AND CORNERS FROM THE INITIAL AND REPAIR PARTS.
- WHEN YOU DO THIS REPAIR, REFER TO:
  - AMM 51-21-0 AND AMM 53-42-11 FOR INTERIOR AND EXTERIOR FINISHES
  - AMM 51-31-0 FOR SEALS AND SEALING
  - SRM 51-10-2 FOR PROTECTIVE TREATMENT OF METAL
  - SRM 51-30 FOR FASTENER CODE, REMOVAL, INSTALLATION, HOLE SIZES AND EDGE MARGINS.

[A] MAY BE CUT FROM NEW SEAT TRACK OR MADE FROM EXTRUSION.

FASTENER SYMBOLS

+ INITIAL FASTENER LOCATION

⊕ REPAIR FASTENER LOCATION

REPAIR MATERIAL			
PART		QTY	MATERIAL
1	TRACK	1	7178-T6511 [A]
2	STRAP	1	0.31 INCH THICK 7075-T6 OR 7178-T6
3	STRAP	1	0.33 INCH THICK 7075-T6 OR 7178-T6
4	RADIUS FILLER	3	0.09 INCH THICK 2024-T3

Seat Track Repair
Figure 7 (Sheet 1)

BOEING PROPRIETARY - Copyright © - Unpublished Work - See title page for details.

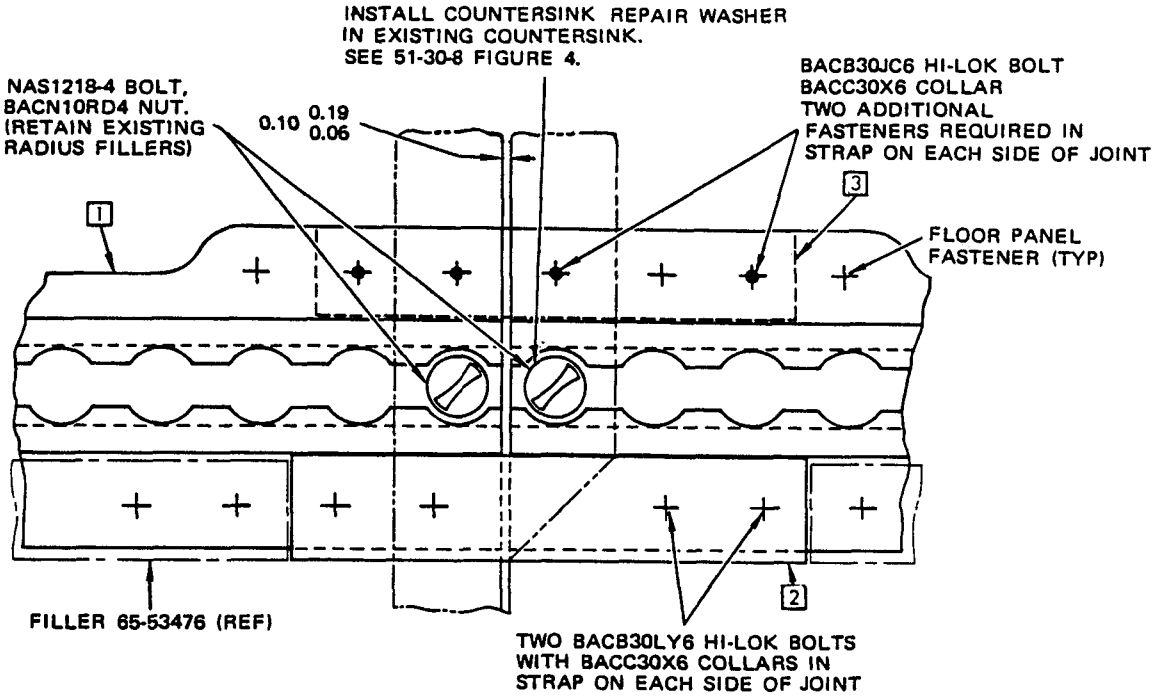

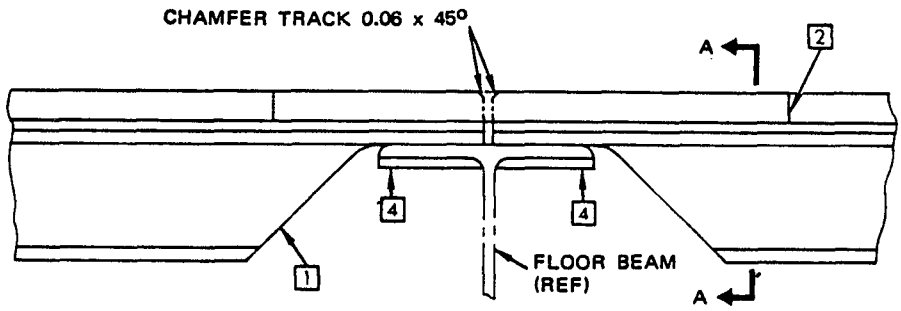

TYPICAL TRACK SPLICE
(CREASE BEAM OMITTED FOR CLARITY)

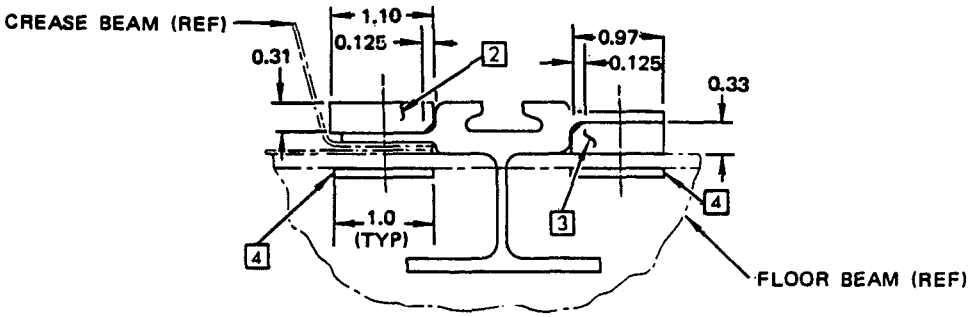

SECTION A–A

Seat Track Repair
Figure 7 (Sheet 2)

REPAIR INSTRUCTIONS

1. Remove the floor panels.
2. Cut and remove the damaged portion of track. The cut line must be situated between the fasteners attaching the track to a floor beam.
3. Make the repair parts.
4. Assemble the repair parts and drill and ream the fastener holes.
5. Remove the repair parts.
6. Apply a chemical conversion coating to the repair parts and the cut edges of the initial track.
7. Install the repair parts.
8. Fill the joint in the track extrusion with BMS 5-95, Class B sealant.
9. Restore the finish.
10. Put the floor panels back to their initial condition.

NOTES

- THIS REPAIR APPLIES TO THE PASSENGER/CARGO SEAT TRACKS MADE FROM BAC1520-1432 OR BAC1520-1434 EXTRUSION.
- THIS REPAIR WILL NOT HAVE AN EFFECT ON A STRUCTURALLY SIGNIFICANT ITEM (SSI) GIVEN IN SRM 51-00-4, FIG. 3. THUS, NO CHANGE TO THE SUPPLEMENTAL STRUCTURAL INSPECTION DOCUMENT (SSID) INSPECTION PROGRAM IS NECESSARY.
- TO REPAIR A SECTION OF SEAT TRACK TWO SPLICES WILL BE REQUIRED UNLESS AN EXISTING JOINT IS TO BE USED.
- BREAK THE SHARP EDGES OF THE INITIAL AND REPAIR PARTS 0.015 TO 0.030 INCH.
- REMOVE ALL NICKS, SCRATCHES, BURRS, SHARP EDGES AND CORNERS FROM THE INITIAL AND REPAIR PARTS.
- WHEN YOU DO THIS REPAIR, REFER TO:
  - AMM 51-21-0 AND 53-42-11 FOR INTERIOR AND EXTERIOR FINISHES
  - AMM 51-21-0 FOR SEALS AND SEALING
  - SRM 51-10-2 FOR PROTECTIVE TREATMENT OF METAL
  - SRM 51-30 FOR FASTENER CODE, REMOVAL, INSTALLATION, HOLE SIZES AND EDGE MARGINS.

[A] MAY BE CUT FROM NEW SEAT TRACK OR MADE FROM EXTRUSION BAC1520-1432 OR BAC1520-1434 AS APPROPRIATE.

FASTENER SYMBOLS

+ INITIAL FASTENER LOCATIONS

⊕ REPAIR FASTENER LOCATIONS

REPAIR MATERIAL			
PART		QTY	MATERIAL
1	TRACK	1	7178-T6511 [A]
2	STRAP	1	0.33 INCH THICK 7075-T6 OR 7178-T6
3	STRAP	1	0.33 INCH THICK 7075-T6 OR 7178-T6
4	RADIUS	4	0.09 INCH THICK 2024-T3

Seat Track Repair
Figure 8 (Sheet 1)

BOEING PROPRIETARY - Copyright © - Unpublished Work - See title page for details.

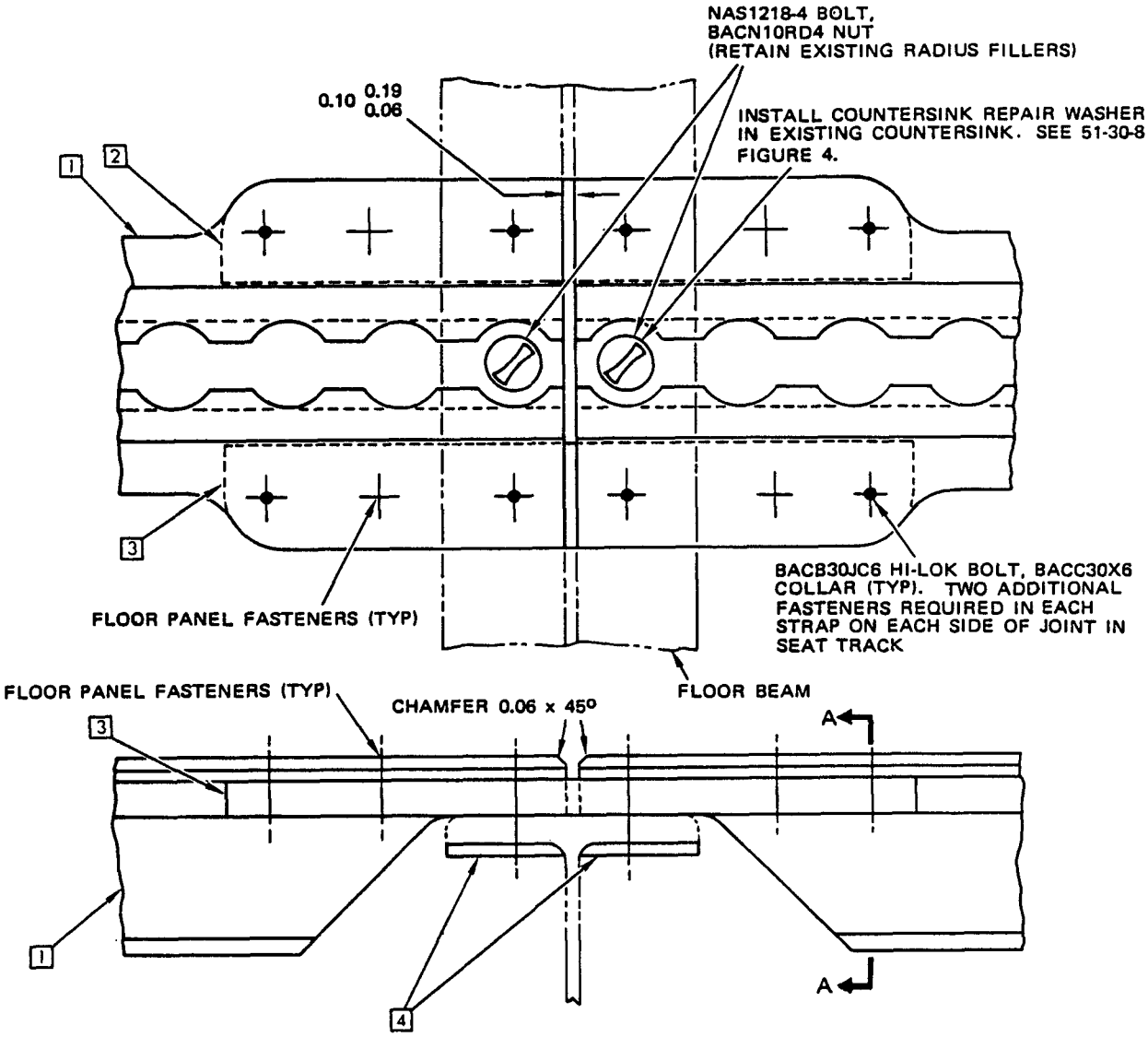

TYPICAL TRACK SPLICE (BAC1520-1434 EXTRUSION SHOWN.)

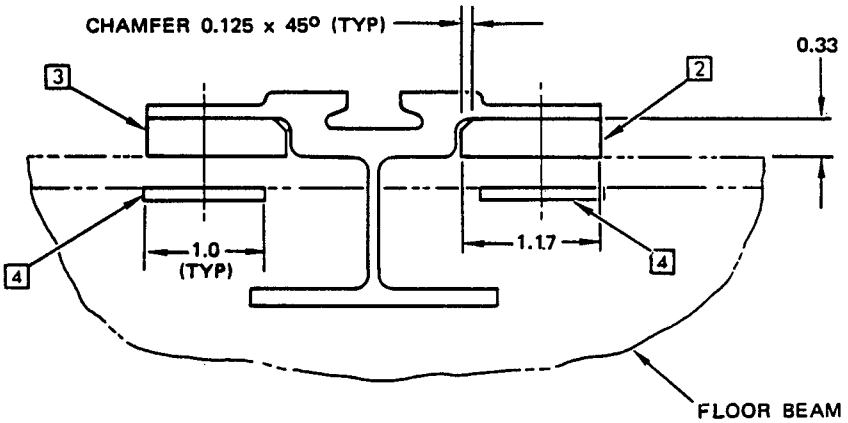

SECTION A–A THROUGH REPAIR TO TRACK
MADE FROM BAC1520-1432

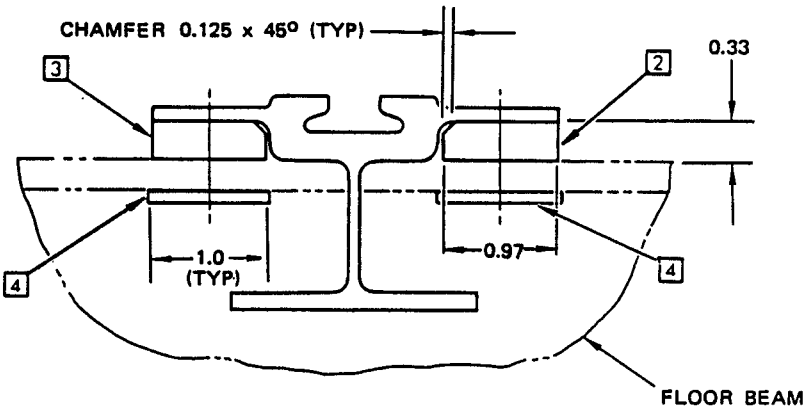

SECTION A–A THROUGH REPAIR TO TRACK
MADE FROM BAC1520-1434

Seat Track Repair
Figure 8 (Sheet 3)

REPAIR INSTRUCTIONS

1. Cut and remove the damaged portion of the seat track.
2. Extend the hole in the upper chord of the floor beam in the vicinity of the cut in the track by 1 inch, to permit installation of the additional bolt.

   NOTE: This is not necessary for the track at LBL 62.50 forward of BS 520, where the supporting chord is a channel.
3. Make the repair parts.
4. Assemble the repair parts and drill the fastener holes.
5. Apply a chemical conversion coating to the repair parts and cut ends of the initial track.
6. Install the repair parts. Apply a layer of BMS 5-26, Class A sealant must be applied to the repair washer and the underside of the bold heads.
7. Fill the gap in the seat track with BMS 5-95, Class B sealant.
8. Apply the finish.

NOTES

- THIS REPAIR APPLIES TO TRACKS MADE FROM BAC1520-1433 AT BL 45.5, BS 540 TO BS 727B AND LBL 62.5, BS 374 TO BS 520.
- THIS REPAIR COULD HAVE AN EFFECT ON A STRUCTURALLY SIGNIFICANT ITEM (SSI) GIVEN IN SRM 51-00-4, FIG. 3. BUT, NO CHANGE TO THE SUPPLEMENTAL STRUCTURAL INSPECTION DOCUMENT (SSID) PROGRAM IS NECESSARY.
- BREAK THE SHARP EDGES OF THE INITIAL AND REPAIR PARTS 0.015 TO 0.030 INCH.
- REMOVE ALL NICKS, SCRATCHES, BURRS, SHARP EDGES AND CORNERS FROM THE INITIAL AND REPAIR PARTS.
- WHEN YOU DO THIS REPAIR, REFER TO:
  - AMM 51-21-0 AND AMM 53-42-11 FOR INTERIOR AND EXTERIOR FINISHES
  - AMM 51-31-0 FOR SEALS AND SEALING
  - SRM 51-10-2 FOR PROTECTIVE TREATMENT OF METAL
  - SRM 51-30 FOR FASTENER CODE, REMOVAL, INSTALLATION, HOLE SIZES AND EDGE MARGINS.

[A] MAKE FROM BAC1520-1433, 7178-T6511 EXTRUSION OR CUT FROM NEW TRACK.

[B] REFER TO SRM 51-30-8, FIG. 4 FOR DETAILS OF COUNTERSINK REPAIR WASHERS.

FASTENER SYMBOLS

+ INITIAL FASTENER LOCATIONS

REPAIR MATERIAL			
PART		QTY	MATERIAL
1	TRACK	1	[A]
2	REPAIR WASHER	1	2024-T4 [B]

Seat Track Repair
Figure 9 (Sheet 1)

BOEING PROPRIETARY - Copyright © - Unpublished Work - See title page for details.

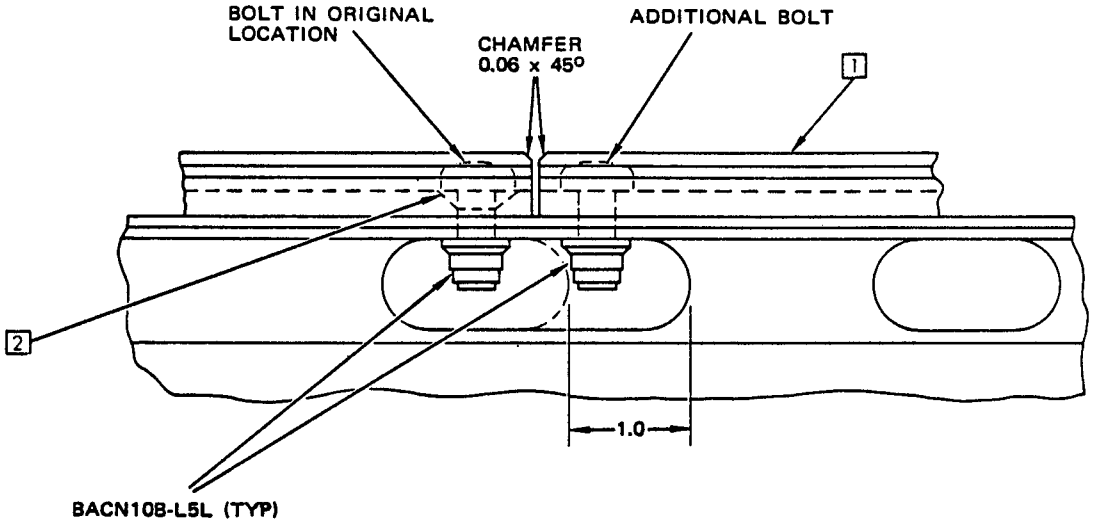

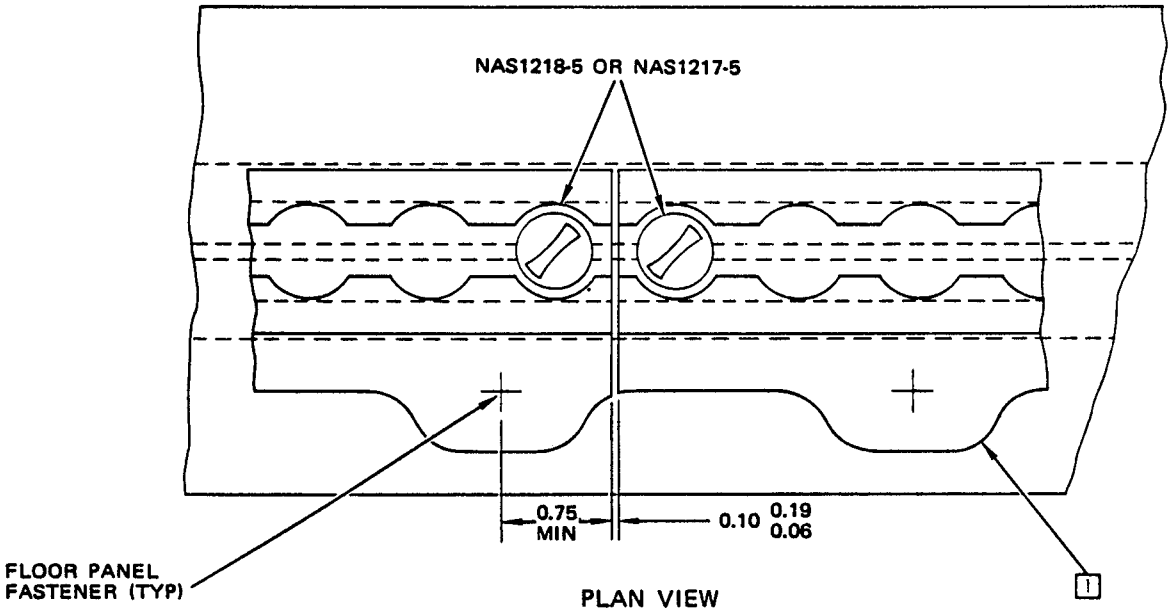

PLAN VIEW

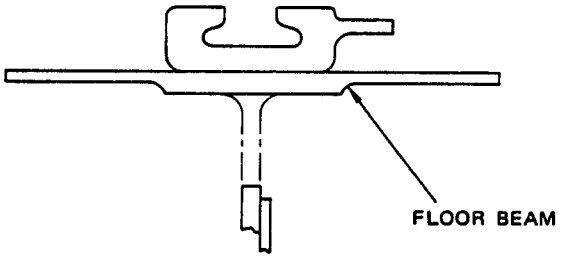

TYPICAL SECTION

Seat Track Repair
Figure 9 (Sheet 2)

REPAIR INSTRUCTIONS

1. Remove the floor panels.
2. Cut the track between the fasteners attaching it to the spanwise floor beam and remove the damaged portion.
3. Remove the fillers originally installed between the track flanges and the spanwise floor beam.
4. Make the repair parts.
5. Assemble the repair parts and drill and ream the fastener holes.
6. Remove the repair parts.
7. Apply a chemical conversion coating to the repair parts and raw edges of the initial track.
8. Install the new track and straps.
9. Fill the joint in the track extrusion with BMS 5-95, Class B sealant.
10. To prevent the use of the track at the extrusion joint, install parts [4] and [5]. Coat the faying surfaces of repair parts and track with BMS 5-26, Class A sealant immediately before installation.
11. Restore the finish.
12. Replace the floor panels.

NOTES

- THIS REPAIR APPLIES TO THE PASSENGER/CARGO SEAT TRACK AT BL 0 MADE FROM EXTRUSION BAC1520-1331.
- THIS REPAIR WILL NOT HAVE AN EFFECT ON A STRUCTURALLY SIGNIFICANT ITEM (SSI) GIVEN IN SRM 51-00-4, FIG. 3. THUS, NO CHANGE TO THE SUPPLEMENTAL STRUCTURAL INSPECTION DOCUMENT (SSID) INSPECTION PROGRAM IS NECESSARY.
- TO REPAIR A SECTION OF SEAT TRACK TWO JOINTS WILL BE REQUIRED UNLESS AN EXISTING JOINT IS TO BE USED.
- BREAK THE SHARP EDGES OF THE INITIAL AND REPAIR PARTS 0.015 TO 0.030 INCH.
- REMOVE ALL NICKS, SCRATCHES, BURRS, SHARP EDGES AND CORNERS FROM THE INITIAL AND REPAIR PARTS.
- WHEN YOU DO THIS REPAIR, REFER TO:
  - AMM 51-21-0 AND AMM 53-42-11 FOR INTERIOR AND EXTERIOR FINISHES
  - AMM 51-31-0 FOR SEALS AND SEALING
  - SRM 51-10-2 FOR PROTECTIVE TREATMENT OF METAL
  - SRM 51-30 FOR FASTENER CODE, REMOVAL, INSTALLATION, HOLE SIZES AND EDGE MARGINS.

[A] MAKE FROM BAC1520-1331 EXTRUSION OR CUT FROM NEW SEAT TRACK.

FASTENER SYMBOLS

+ INITIAL FASTENER LOCATIONS

⊕ REPAIR FASTENER LOCATIONS

REPAIR MATERIAL			
PART		QTY	MATERIAL
1	TRACK	1	7178-T6511 [A]
2	STRAP	1	0.33 INCH THICK 7075-T6 OR 7178-T6
3	STRAP	1	0.33 INCH THICK 7075-T6 OR 7178-T6
4	PLATE	1	0.14 INCH THICK 2024-T3 OR -T4
5	PLATE	1	0.14 INCH THICK 2024-T3 OR -T4

Seat Track Repair
Figure 10 (Sheet 1)

BOEING PROPRIETARY - Copyright © - Unpublished Work - See title page for details.

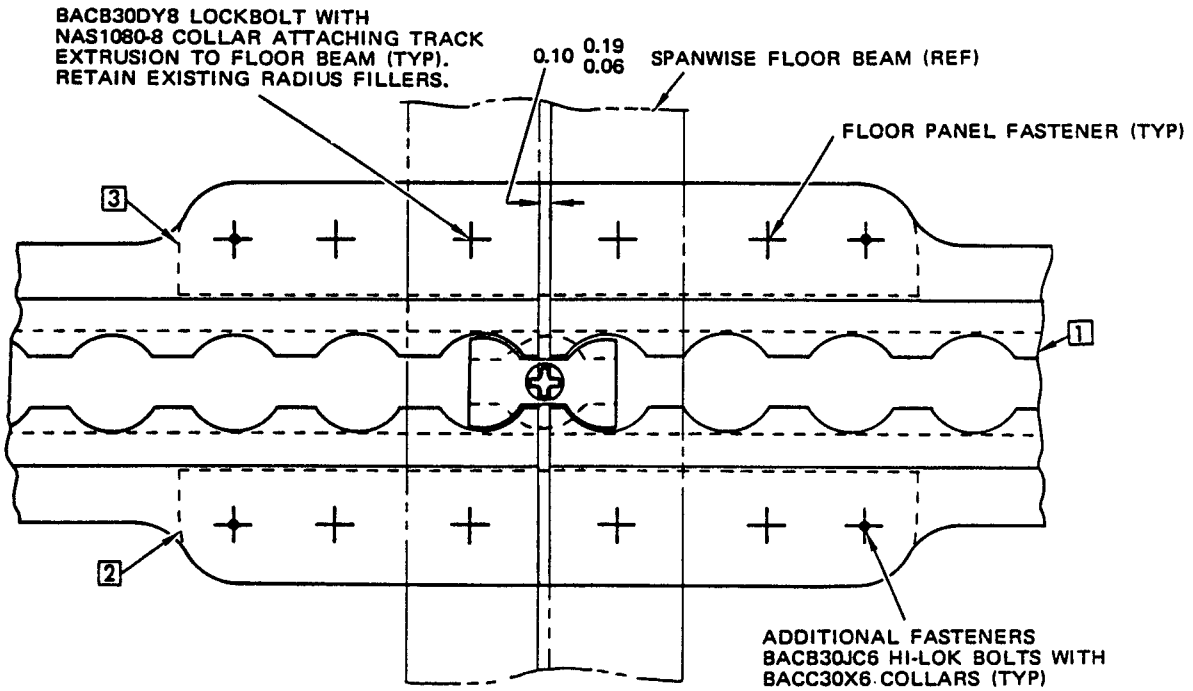

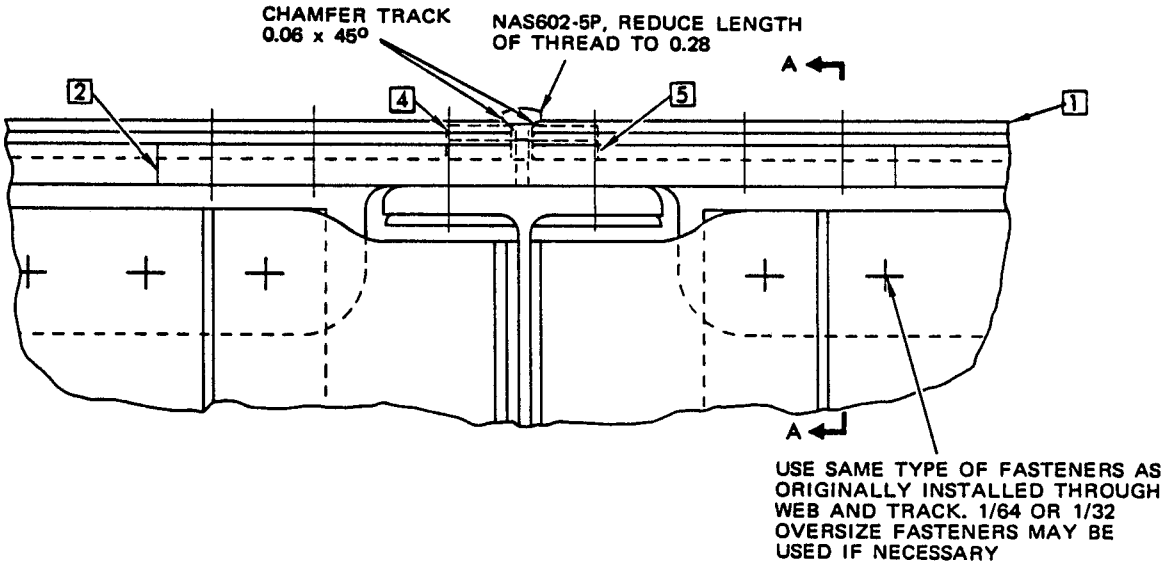

Seat Track Repair
Figure 10 (Sheet 2)

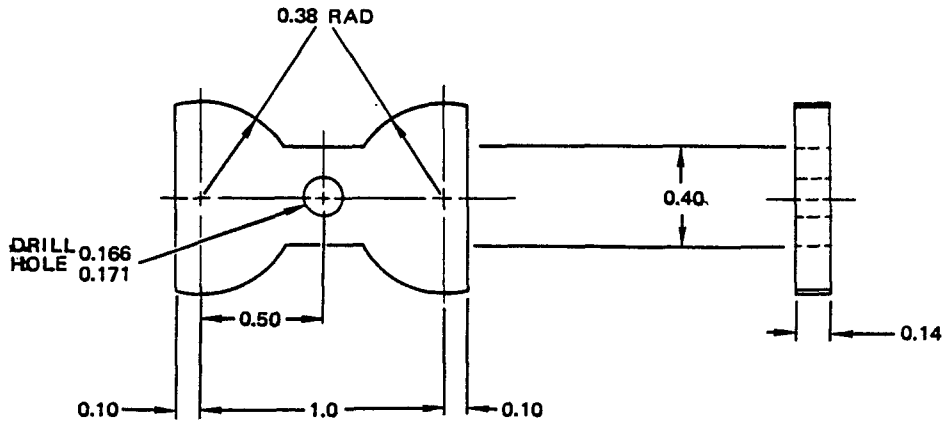

DETAIL OF PART 4

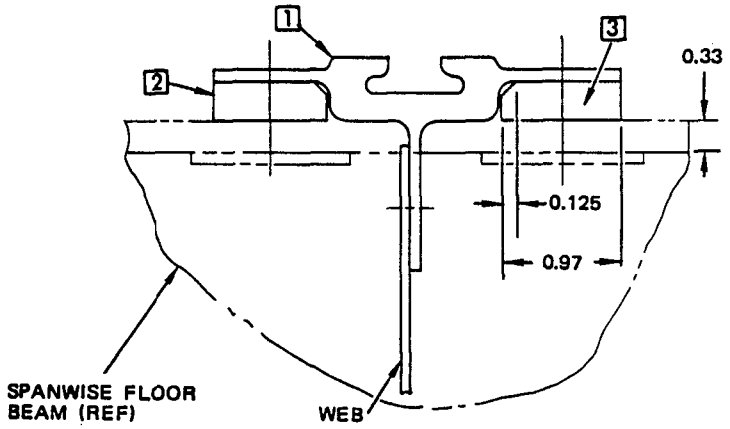

SECTION A–A

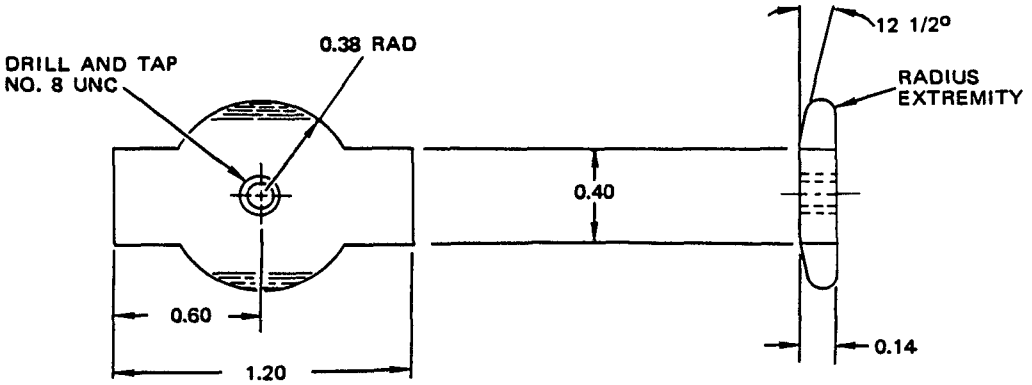

DETAIL OF PART 5

Seat Track Repair
Figure 10 (Sheet 3)

REPAIR INSTRUCTIONS

1. Remove floor panels as required to gain access.

2. Cut out damaged portion of track. Make cuts as shown between panel fastener holes. Locate cuts so repair parts [2] and [3] are between two adjacent frames.

3. Remove nutplates NAS686A3 (for panel fasteners) located in area where repair part [2] is to be installed. Retain for reinstallation.

4. Make repair parts.

5. Locate repair parts and drill and countersink fastener holes where required.

6. Remove all burrs, nicks, sharp edges, and corners from the cut original parts and the repair parts. Chamfer or radius 0.015 to 0.030 on all cut edges.

7. Brush alodize repair parts, trimmed original parts and all fastener holes.

8. Apply 2 coats of BMS 10-11 Type 1 primer to repair parts and surfaces of repair area.

9. Assembly nutplates NAS686A3 on repair part [2] for panel fasteners.

10. Install repair parts as follows:
    A. Apply BMS 5-95 faying surface sealant to repair parts for corrosion prevention.

    B. Apply prepack seals in chamfered corners of repair.

    C. Install fasteners wet with BMS 5-95 sealant

    D. Apply BMS 5-95 sealant at gaps between original cargo tracks and insert (repair part [1]).

    E. Apply fillet seals to fasteners (on pressure side of seal plane) and along edges of repair parts.

    F. Refer to 51-20-4 and 53-30-4, Maintenance Manual 51-31-0 for sealing instructions.

11. Restore original finish according to the Maintenance Manual.

Cargo Track Repair - Lower Lobe
Figure 11 (Sheet 1)

NOTES

- THIS REPAIR MAY BE USED TO PARTIALLY REPLACE A CARGO TRACK OR TO SPLICE A CARGO TRACK.
- THIS REPAIR WILL NOT HAVE AN EFFECT ON A STRUCTURALLY SIGNIFICANT ITEM (SSI) GIVEN IN SRM 51-00-4, FIG. 3. THUS, NO CHANGE TO THE SUPPLEMENTAL STRUCTURAL INSPECTION DOCUMENT (SSID) INSPECTION PROGRAM IS NECESSARY.
- THIS REPAIR MAY BE USED IF REPAIR PARTS [2] AND [3] ARE INSTALLED BETWEEN A PAIR OF ADJACENT FRAMES AND IF THE CROSS SECTION OF THE CARGO TRACK BETWEEN THOSE FRAMES IS IDENTICAL TO THAT SHOWN IN SECTION A-A (SEE REPAIR PART [1]).
- THIS REPAIR IS APPLICABLE TO FORWARD AND AFT CARGO DECKS WITH CONTINUOUS TRACKS.
- NUMBER OF FASTENERS SHOWN IS THE MINIMUM REQUIRED ON EACH SIDE OF CUT.
- WHEN YOU DO THIS REPAIR, REFER TO:
  - AMM 51-30-0 FOR SEALING
  - AMM 51-42-11 FOR REFINISHING
  - SRM 51-10-2 FOR PROTECTIVE TREATMENT OF METAL
  - SRM 51-20-4 AND 53-30-4 FOR SEALING INSTRUCTIONS
  - SRM 51-30-0 FOR FASTENER CODE, REMOVAL, INSTALLATION, HOLE SIZES AND EDGE MARGINS.

[A] CHAMFER 0.06 INCH X 45° ENDS OF INITIAL AND NEW EXTRUSION.

[B] REMOVE NUTPLATES NAS686A3 FROM CARGO TRACK AND ASSEMBLY ON REPAIR PART [2].

[C] BMS 5-95, CLASS B SEALANT.

[D] PROCEDURE FROM BOEING COMPANY SPARES OR MAKE FROM EXTRUSION PER APPROPRIATE DRAWING.

FASTENER SYMBOLS

+ INITIAL PANEL FASTENER LOCATIONS

REPAIR FASTENER LOCATIONS
INSTALL BACB30FN6 OR BACB30GY6

REPAIR FASTENER LOCATIONS
INSTALL BACB30FM6 OR BACB30GW6

REPAIR MATERIAL			
PART		QTY	MATERIAL
1	TRACK EXTRUSION	1	BAC1520-1397 7178-T6511 [D]
3	PLATE	2	0.100 INCH THICK 7178-T6 OR 7075-T6
3	ANGLE	2	MAKE FROM AND10134-1002 7178-T6 OR 7075-T6

Cargo Track Repair - Lower Lobe
Figure 11 (Sheet 2)

BOEING PROPRIETARY - Copyright © - Unpublished Work - See title page for details.

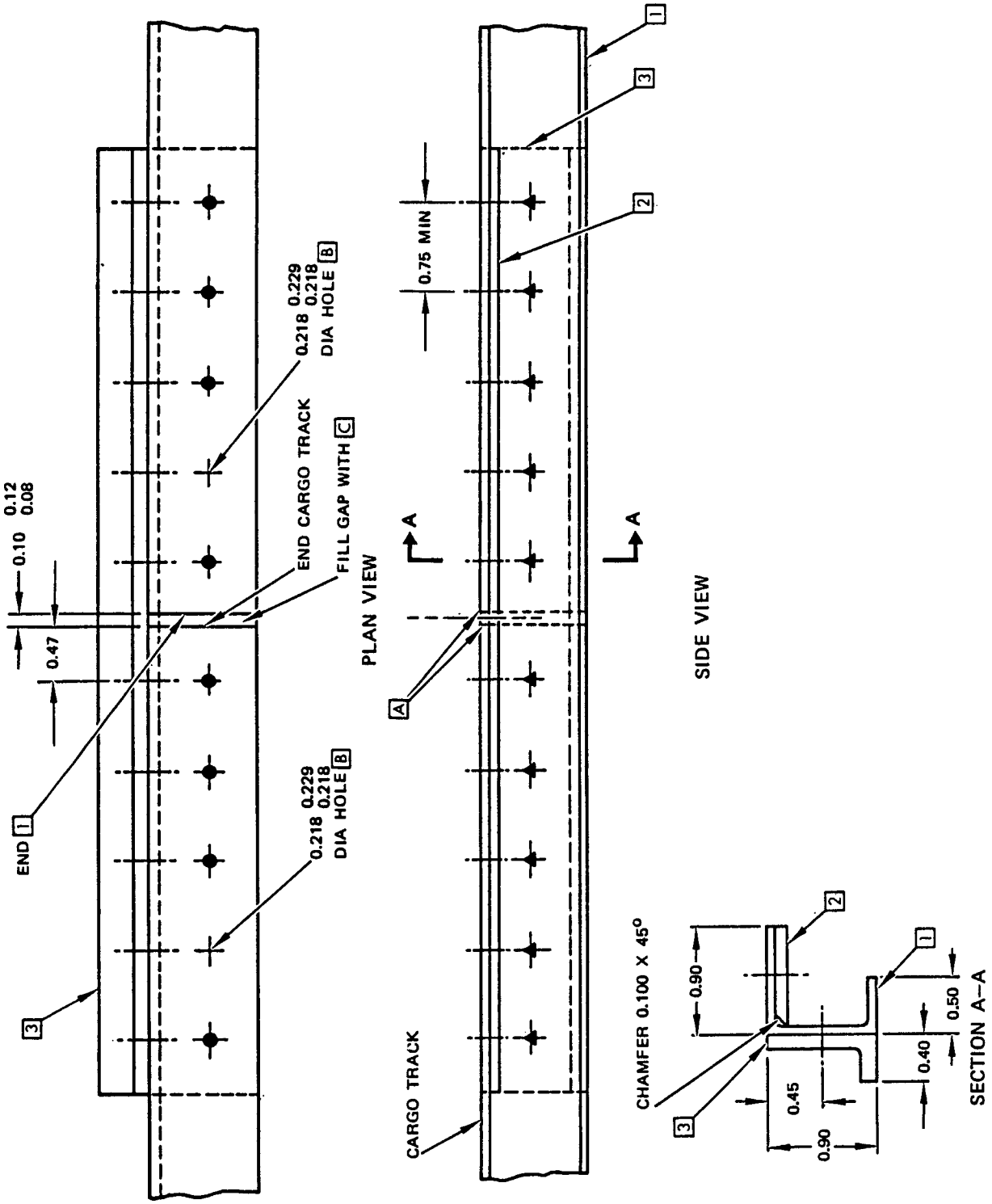

Cargo Track Repair - Lower Lobe
Figure 11 (Sheet 3)

SERVICE BULLETIN REPAIRS

The following Service Bulletins contain beam repairs which are available for use where specific damage has been encountered. Usually, the Service Bulletin also covers preventive modification data which operators are encouraged to use to eliminate the need for repair.

DAMAGED AREA	CUM LINE NUMBER EFFECTIVITY [A]	SB NUMBER
WINGS - WHEEL WELL PRESSURE FLOOR TRANSVERSE BEAM AND BBL "0" FLOOR BEAM INSPECTION, MODIFICATION, AND REPAIR	1 THRU 598, 601 THRU 622	737-57-1106
FUSELAGE - CREASE BEAM WEB MODIFICATION	1 THRU 1585, EXCEPT FOR 737-200C AIRPLANES	737-53-1122
FUSELAGE - BODY STATION 727 KEEL BEAM INBOARD TEE-SPLICE INTERSECTION AND REPLACEMENT	1 THRU 383	737-53-1138

[A] FOR AIRPLANES ON WHICH PREVENTIVE MODIFICATION HAS NOT BEEN ACCOMPLISHED

REPAIR INSTRUCTIONS

1. Remove the vertical stiffeners which are to be replaced with modified stiffeners.
2. Cut out damaged portion of web. Take care not to damage existing structure.
3. Assemble repair parts and drill fastener holes.
4. Remove repair parts and apply chemical conversion coating to all raw edges of existing and repair parts. Refer to SRM 51-10-2.
5. Install repair parts, nutplates and fasteners.
6. Restore finish. Refer to AMM 51-21.

NOTES

- REFER TO DRAWING 65-76763 FOR COMPLETE INSTALLATION DETAILS OF THIS REPAIR.
- ALL PARTS AND FASTENERS REQUIRED TO ACCOMPLISH THIS REPAIR ARE SUPPLIED IN A KIT, PART NUMBER 65-76763-1.
- THIS REPAIR WILL NOT HAVE AN EFFECT ON A STRUCTURALLY SIGNIFICANT ITEM (SSI) GIVEN IN SRM 51-00-4, FIG. 3. THUS, NO CHANGE TO THE SUPPLEMENTAL STRUCTURAL INSPECTION DOCUMENT (SSID) INSPECTION PROGRAM IS NECESSARY.
- WHEN YOU USE THIS REPAIR, REFER TO:
  - AMM 51-21 FOR INTERIOR AND EXTERIOR FINISHES
  - SRM 51-10-2 FOR PROTECTIVE TREATMENT OF METAL
  - SRM 51-30-00 FOR FASTENER CODE, REMOVAL, INSTALLATION, HOLE SIZE, EDGE MARGINS AND SUBSTITUTION.
- BREAK SHARP EDGES OF ORIGINAL AND REPAIR PARTS 0.015 TO 0.030.

Lower Beam Repair - BBL 40.875 Wing Center Section
Figure 1 (Sheet 1)

BOEING PROPRIETARY - Copyright © - Unpublished Work - See title page for details.

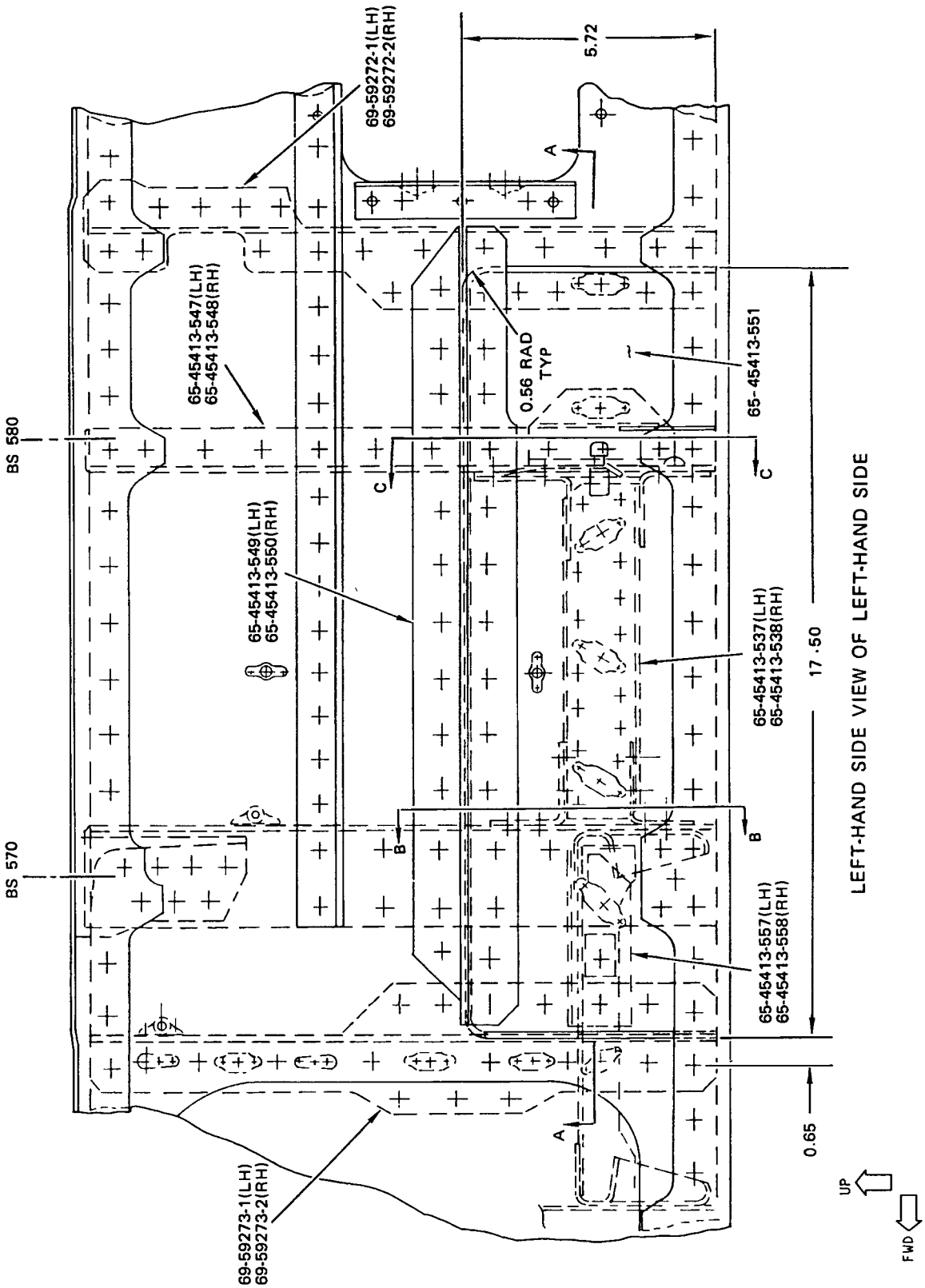

Lower Beam Repair - BBL 40.875 Wing Center Section
Figure 1 (Sheet 2)

BOEING PROPRIETARY - Copyright © - Unpublished Work - See title page for details.

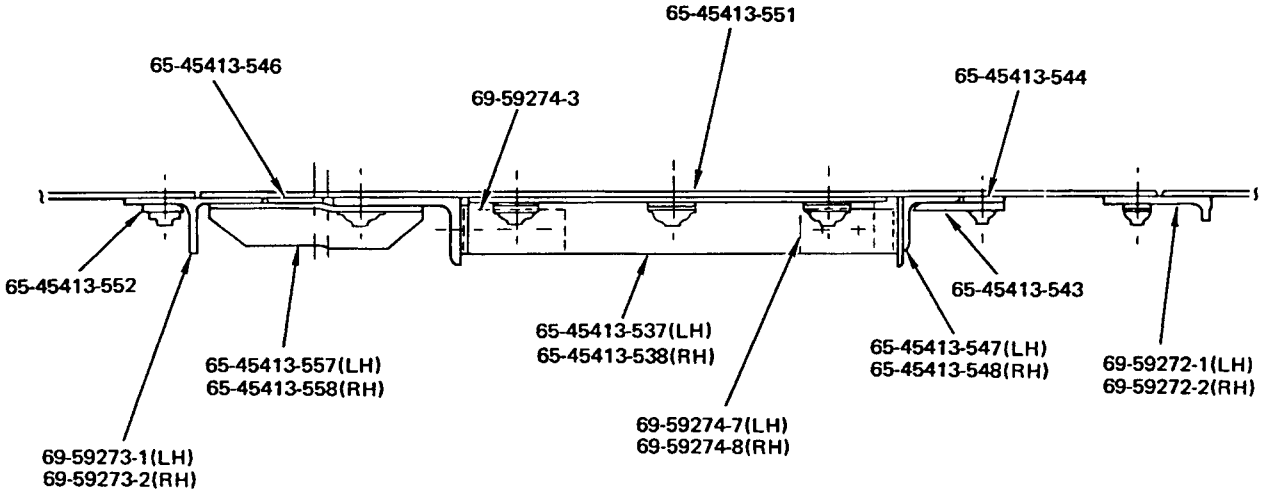

SECTION A–A

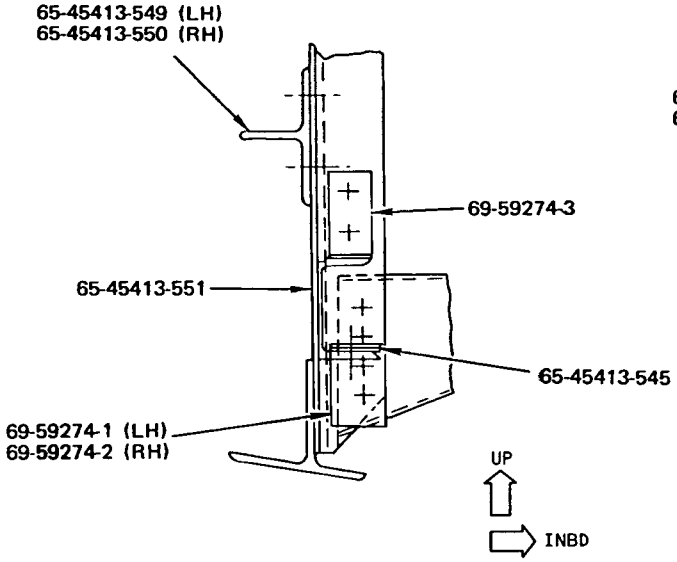

SECTION B–B

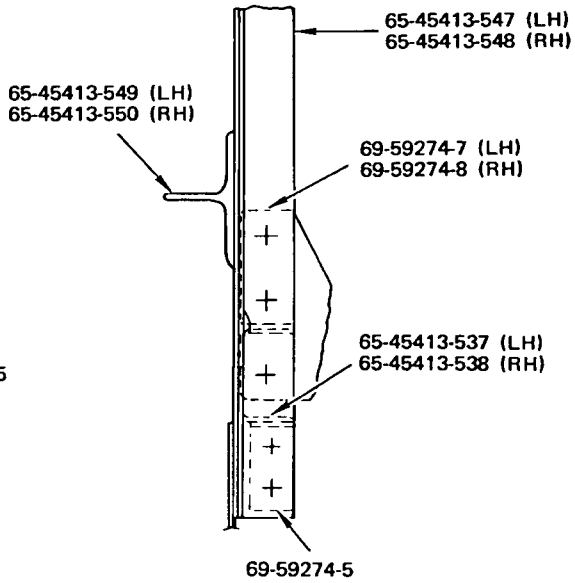

SECTION C–C

Lower Beam Repair - BBL 40.875 Wing Center Section
Figure 1 (Sheet 3)

BOEING PROPRIETARY - Copyright © - Unpublished Work - See title page for details.

APPLICABILITY

THIS REPAIR APPLIES ONLY TO THE INBOARD AREA OF THE LOWER CHORD OF THE KEEL BEAM THREE FASTENERS FORWARD AND AFT OF BS 727.0 + 16.0.

TELL BOEING IF THE DAMAGE EXTENDS MORE THAN THREE FASTENER HOLES FORWARD OR AFT OF BS 727.0 + 16.0.

REFER TO FIGURE 3 TO REPAIR DAMAGE TO THE OUTBOARD FLANGE AT BS 727.0 + 16.0. IF NECESSARY, FIGURE 2 AND FIGURE 3 CAN BE USED AT THE SAME TIME.

REPAIR INSTRUCTIONS

1. To get access, go into the damaged area through the cargo door and remove the floor panels and cargo liner.
2. Remove these parts from the damaged area:
   - -The inboard splice angle
   - -The outboard splice angle
   - -The frame shear tie [A]
   - -The intercostal attach channels

   See Detail II.
3. Do a high frequency eddy current test to make sure there are no cracks through these parts:
   - -The outboard splice angle
   - -The areas of the lower keel beam chord under the splice angles
   - -The skin attached to the keel beam, in the repair area.

   Refer to NDT 51-00-00, Part 6, for the high frequency eddy current procedure. As an alternative, do a dye penetration inspection. Refer to SOPM 20-20-02.
4. Cut out the flange of the keel beam chord. Refer to Detail II. [B]

   NOTE: Use a thin piece of steel sheet as necessary to protect the fuselage skin. If the skin is damaged, refer to SRM 53-30-3 for a repair.
5. Do a high frequency eddy current test along the cutout area to make sure there are no cracks. If there are no cracks, make the cutout larger by 0.04 inch. Refer to SRM 51-10-1. Refer to NDT 51-00-00, Part 6, for the high frequency eddy current procedure.
6. Make the repair parts. Refer to Table II, and Details II and V.
7. Assemble the repair parts and drill the fastener holes as follows (Refer to Detail II):

   A. Part 1 strap:
      - -Cut the parts of the frame web and frame clip to get the clearance necessary to install the part 1 strap. Refer to Detail III.
      - -Put the part 1 strap on the inboard horizontal keel beam chord.

   B. Part 2 filler and part 3 angle:
      - -Put the part 2 filler and the part 3 angle in position
      - -Drill the fastener holes
      - -Remove the repair parts.

   C. Part 4, part 5, part 6, part 8 and part 9 fillers:
      - -Put the fillers in position on the skin.

   D. Part 7 shear tie:
      - -Cut and chamfer the shear tie as necessary
      - -Put the shear tie on the part 4, part 5 and part 6 fillers, and against the frame
      - -Install the tapered filler that was removed under the joggle of the shear tie
      - -Cut and chamfer the frame edge to be clear of the lower radius of the shear tie
      - -Drill the fastener holes
      - -Remove the repair parts.

   E. The frame clip:
      - -Cut the clip as shown in Detail IV
      - -Put the part against the frame
      - -Drill the fastener holes
      - -Remove the part.
8. Remove the nicks, scratches, gouges, burrs, and sharp edges from the repair parts and the cut edges of the chord.
9. Apply a chemical conversion coating to:
   - -The repair parts
   - -The mating surfaces of the initial attach channels, outboard splice angle, and tapered filler
   - -The cut edges of the chord.

   Refer to SRM 51-10-2.
10. Apply two layers of BMS 10-11, Type I primer to:
    - -The repair parts
    - -The mating surfaces of the initial attach channels, outboard splice angle, and tapered filler
    - -The cut edges of the chord.

    Refer to SOPM 20-41-02.
11. Install repair washers in countersunk holes. Refer to SRM 51-30-8.
12. Install the repair parts and the initial parts with BMS 5-95 sealant on the mating surfaces.
13. Install the fasteners and, as necessary, the countersink washers. Install the hex drive fasteners wet with BMS 5-95 sealant in transition fit holes.
14. Apply one layer of BMS 3-23 corrosion inhibiting compound to the repair area. Refer to SRM 51-10-2.
15. Install the floor panels which were removed to get access to the damaged area.

Keel Beam Lower Chord Repair - Inboard Flange
Figure 2 (Sheet 1)

BOEING PROPRIETARY - Copyright © - Unpublished Work - See title page for details.

NOTES

- THIS REPAIR WILL NOT HAVE AN EFFECT ON A STRUCTURALLY SIGNIFICANT ITEM (SSI) GIVEN IN SRM 51-00-4, FIG. 3. THUS, NO CHANGE TO THE SUPPLEMENTAL STRUCTURAL INSPECTION DOCUMENT (SSID) INSPECTION PROGRAM IS NECESSARY.
- USE SHIMS TO KEEP THE GAPS 0.005 INCH OR LESS. USE MORE 2024-T3 CLAD OR 7075-T6 CLAD FILLERS AND LAMINATED SHIM STOCK AS NECESSARY.
- IF THE INITIAL FASTENER HOLE IS DAMAGED AND MUST BE OVERSIZED, USE AN APPLICABLE REPLACEMENT FASTENER GIVEN IN TABLE I.
- ALL DIMENSIONS ARE IN INCHES.
- WHEN YOU USE THIS REPAIR REFER TO:
  - -AMM 51-21 FOR INTERIOR AND EXTERIOR FINISHES
  - -NDT 51-00-00, PART 6, FOR THE EDDY CURRENT PROCEDURES
  - -SOPM 20-20-02 FOR PENETRANT METHODS OF INSPECTION
  - -SOPM 20-41-02 FOR THE APPLICATION OF CORROSION RESISTANT PRIMER
  - -SRM 51-10-1 FOR DAMAGE CLASSIFICATION
  - -SRM 51-10-2 FOR PROTECTIVE TREATMENT OF METAL REPAIR PARTS
  - -SRM 51-20-4 FOR REPAIR SEALING
  - -SRM 51-30 FOR FASTENER CODE, REMOVAL, INSTALLATION, HOLE SIZES AND EDGE MARGINS
  - -SRM 51-30-8 FOR COUNTERSINKING AND COUNTERSINK REPAIR WASHERS

[A] REMOVE THE TAPERED FILLER WHICH FILLS THE GAP BETWEEN THE FRAME SHEAR TIE AND THE LOWER CHORD FLANGE.

[B] CUT OUT THE MINIMUM QUANTITY OF MATERIAL NECESSARY TO REMOVE THE CRACK.

[C] THE PART 7 TEE SHEAR TIE REPLACES THE INITIAL FRAME SHEAR TIE.

[D] THE LOWER EDGE OF THE FRAME CLIP MUST BE CUT TO PERMIT THE MAXIMUM POSSIBLE EDGE MARGIN. SEE DETAILS III AND IV.

[E] THIS IS A TYPICAL KEEL BEAM ASSEMBLY. THE FASTENERS LOCATIONS THAT ARE THE SAME IN PARTS 4, 5, 6 AND 7 CAN BE IN DIFFERENT INSTALLATIONS. ADJUST THE FASTENER LOCATIONS, AND THE SHAPE AND DIMENSIONS OF THE REPAIR PARTS TO THE INSTALLATION.

FASTENER SYMBOLS

REFERENCE FASTENER LOCATION.

REPAIR FASTENER LOCATION. INSTALL A BACR15BB5D RIVET.

INITIAL FASTENER LOCATION INSTALL A BACB30FQ6A HEX DRIVE BOLT AND A BACC30M6 COLLAR.

INITIAL FASTENER LOCATION INSTALL A BACB30KK10A HEX DRIVE BOLT AND A BACC30R10 COLLAR.

INITIAL FASTENER LOCATION INSTALL A BACB30FM8A HEX DRIVE BOLT AND A BACC30M8 COLLAR.

INITIAL FASTENER LOCATION INSTALL A FASTENER AS GIVEN IN TABLE I. USE THE SAME DIAMETER AS THE INITIAL FASTENER.

REPAIR FASTENERS		
INITIAL FASTENER	REPAIR FASTENER (PREFERRED)	REPAIR FASTENER (FOR HOLE CLEANUP, 1/32 INCH MAX OVERSIZE)
PROTRUDING HEAD RIVET	BACR15BB()D	BACR15ET()D
HEX DRIVE BOLT OR LOCKBOLT	BACB30FP()A WITH A BACC30M COLLAR	BACB30KK()A WITH A BACC30R COLLAR
COUNTERSINK RIVET	BACR15CE()D	BACR15DS()D

TABLE I

Keel Beam Lower Chord Repair - Inboard Flange
Figure 2 (Sheet 2)

BOEING PROPRIETARY - Copyright © - Unpublished Work - See title page for details.

REPAIR MATERIAL			
PART	DESCRIPTION	QTY	MATERIAL
1	STRAP	1	0.20 X 1.70 X 18.19 7075-T6 BARE SHEET (AS AN ALTERNATIVE, MACHINE THE PART FROM A 7075-T6 EXTRUDED BAR. SHOT PEEN OR FLAT PEEN THE PART.) SEE DETAIL V
2	FILLER	1	7075-T6 CLAD (MACHINE TO ALIGN WITH THE CUTOUT IN THE LOWER CHORD FLANGE)
3	ANGLE	1	USE BOEING PART NO. 65-45866-505
4	FILLER	1	0.071 X 4.9 X 10.5 2024-T3 CLAD
5	FILLER	1	0.063 X 3.0 X 6.5 2024-T3 CLAD
6	FILLER	1	0.063 X 1.8 X 6.5 2024-T3 CLAD
7	TEE SHEAR TIE C	1	USE THE SAME BOEING PART NO. USED FOR THE INITIAL SHEAR TIE, EXCEPT THE NEW PART MUST NOT HAVE HOLES. DO NOT DRILL THE PILOT HOLES.
8	FILLER	1	0.063 X 1.8 X 5.0 2024-T3 CLAD
9	FILLER	1	0.063 X 3.0 X 5.0 2024-T3 CLAD

TABLE II

Keel Beam Lower Chord Repair - Inboard Flange
Figure 2 (Sheet 3)

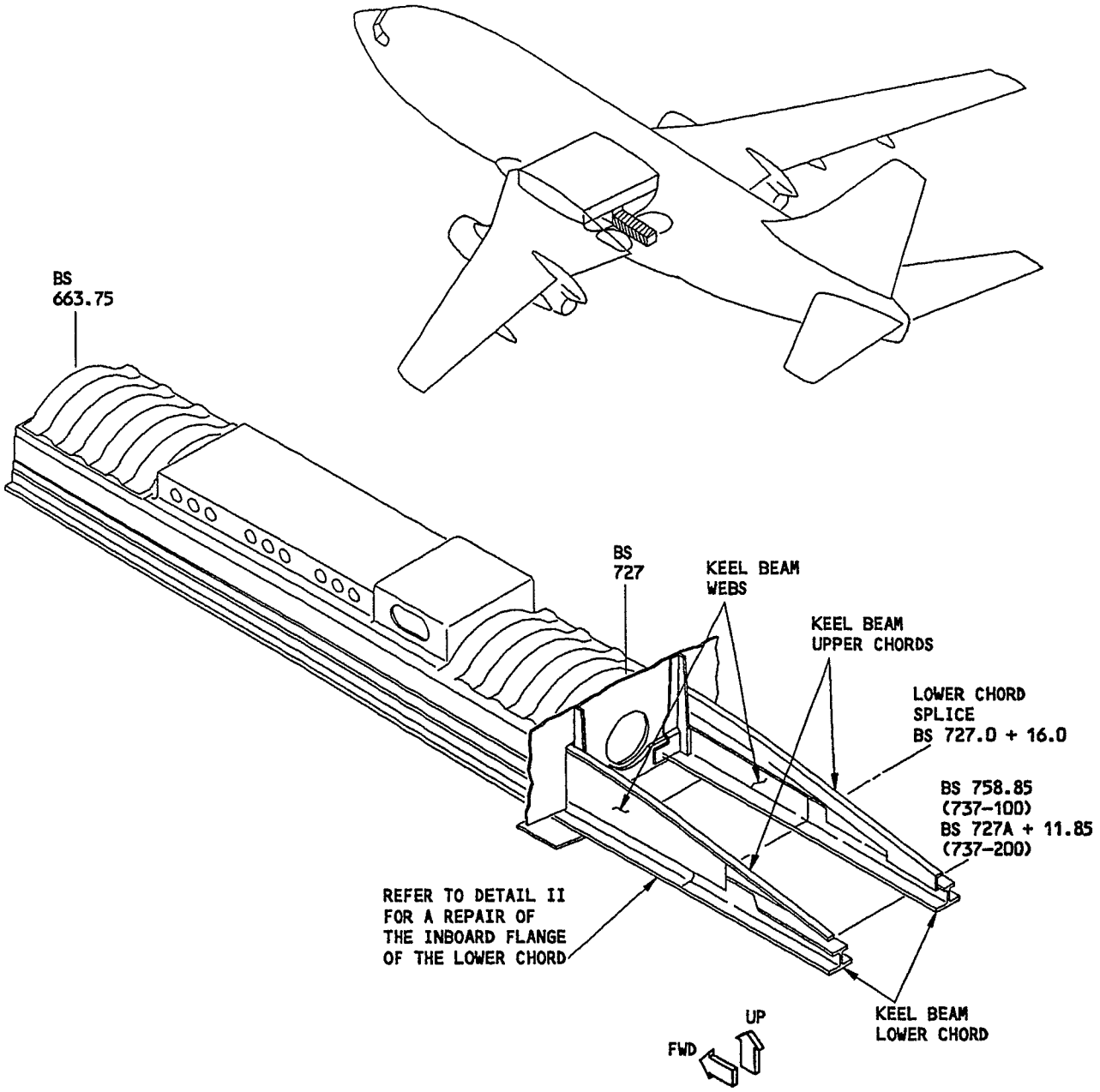

VIEW OF THE KEEL BEAM
AFT OF THE REAR SPAR
DETAIL I

Keel Beam Lower Chord Repair - Inboard Flange
Figure 2 (Sheet 4)

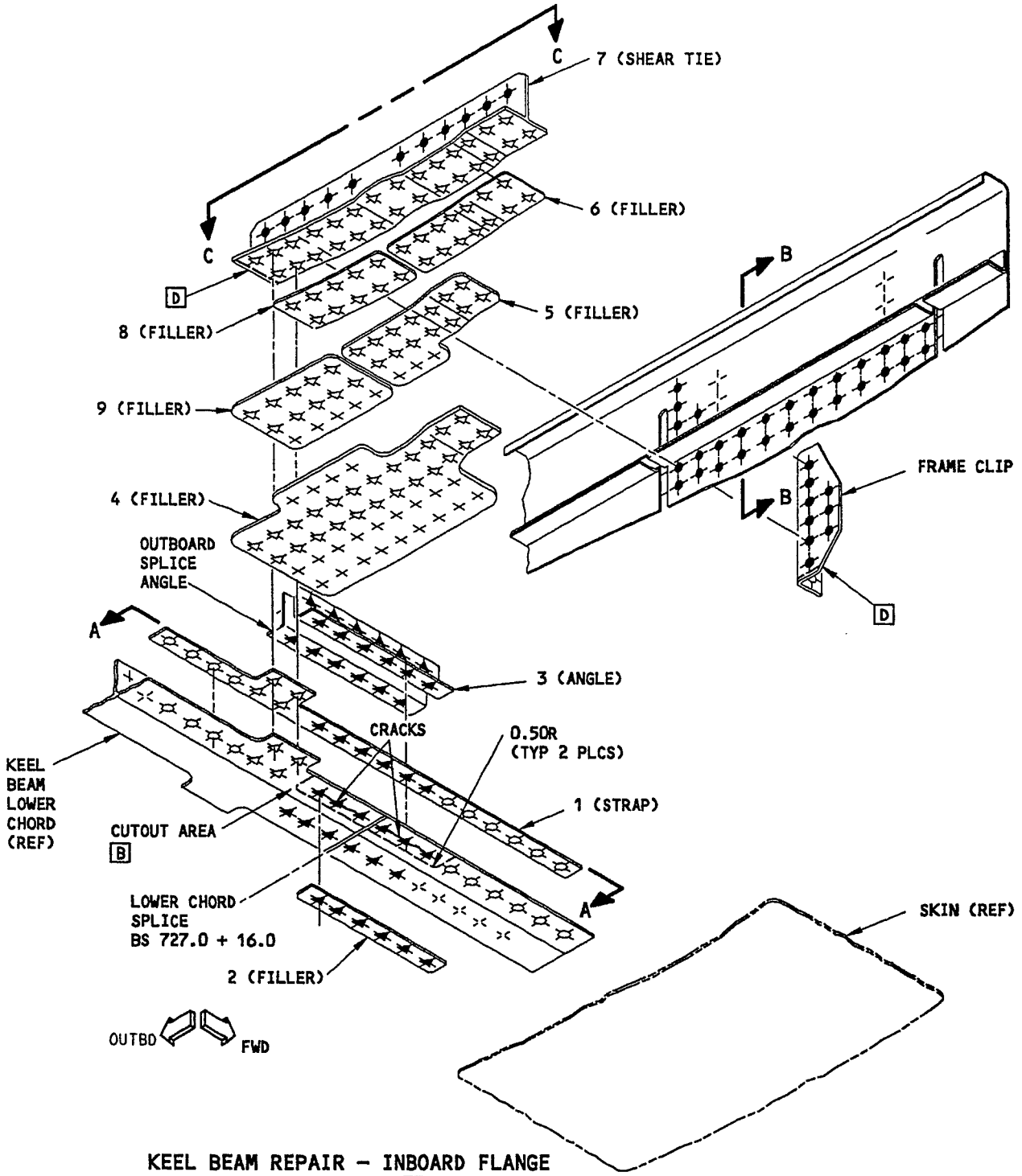

KEEL BEAM REPAIR - INBOARD FLANGE
DETAIL II D

Keel Beam Lower Chord Repair - Inboard Flange
Figure 2 (Sheet 5)

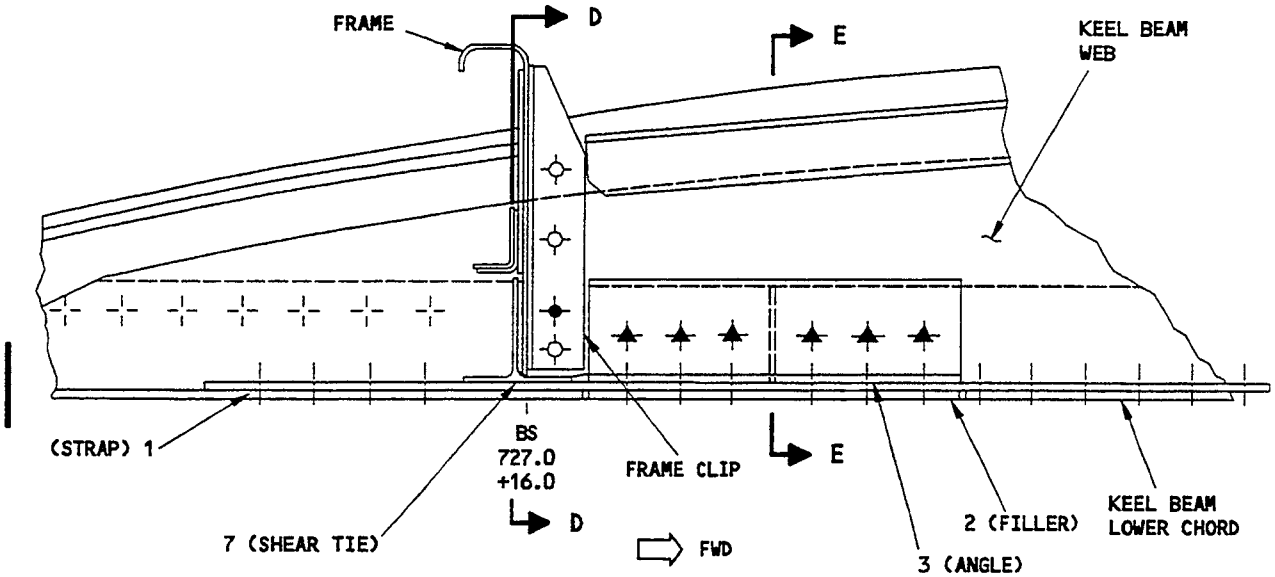

SECTION A-A

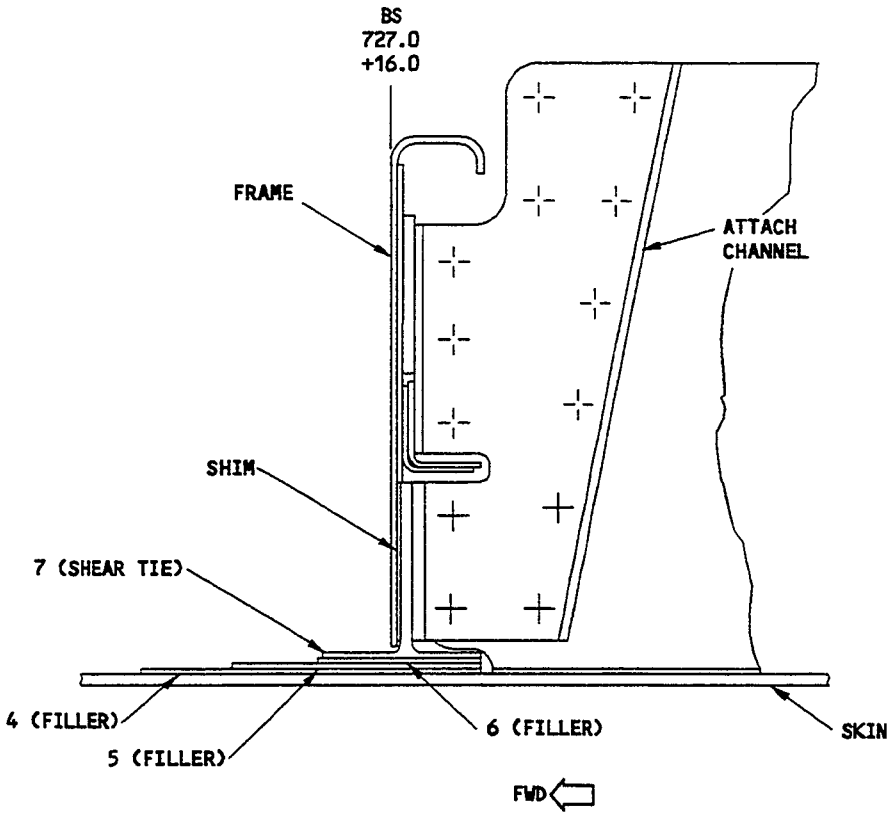

SECTION B-B

Keel Beam Lower Chord Repair - Inboard Flange
Figure 2 (Sheet 6)

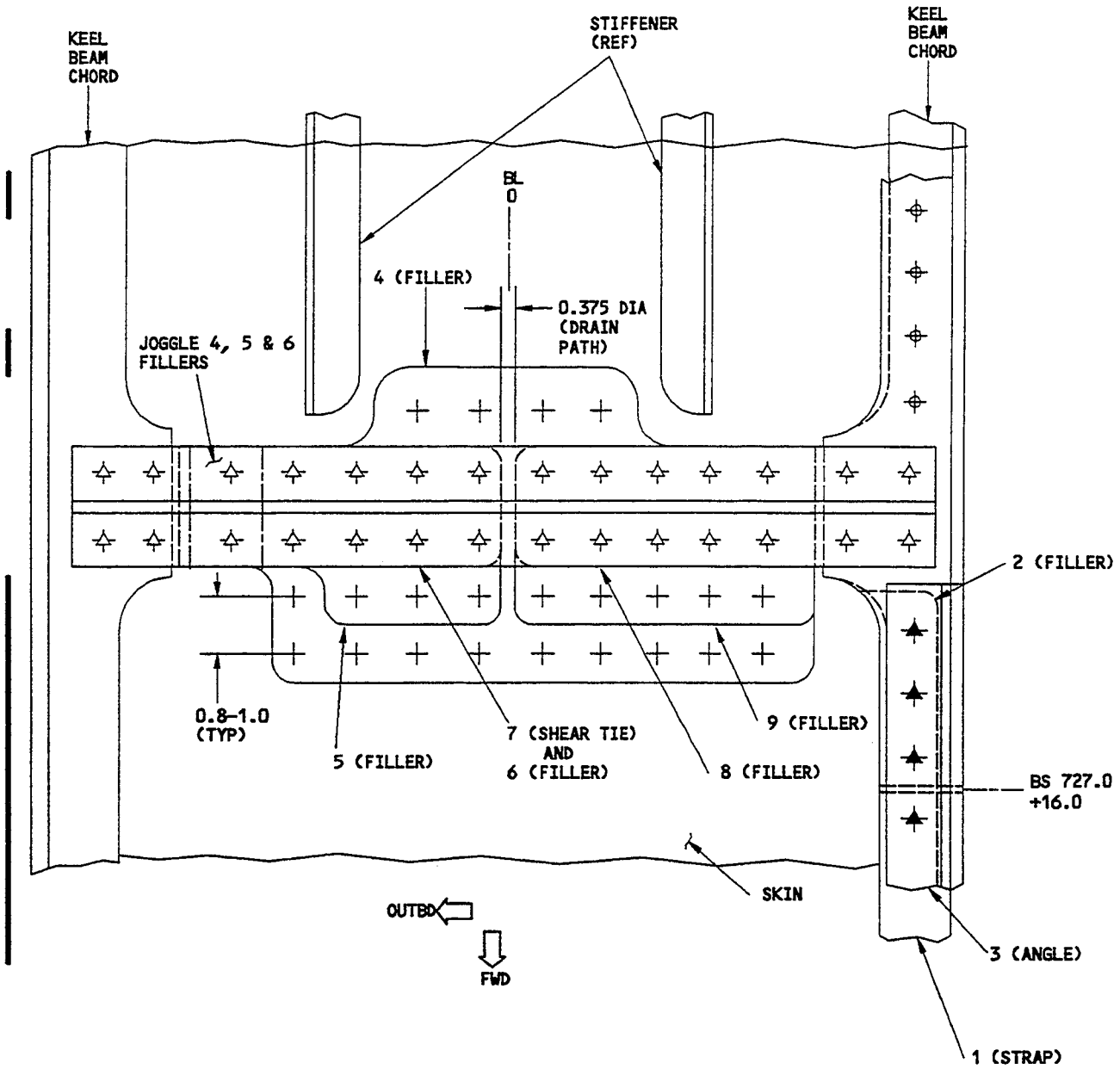

PLAN VIEW

SECTION C-C [E]

Keel Beam Lower Chord Repair - Inboard Flange
Figure 2 (Sheet 7)

E02667

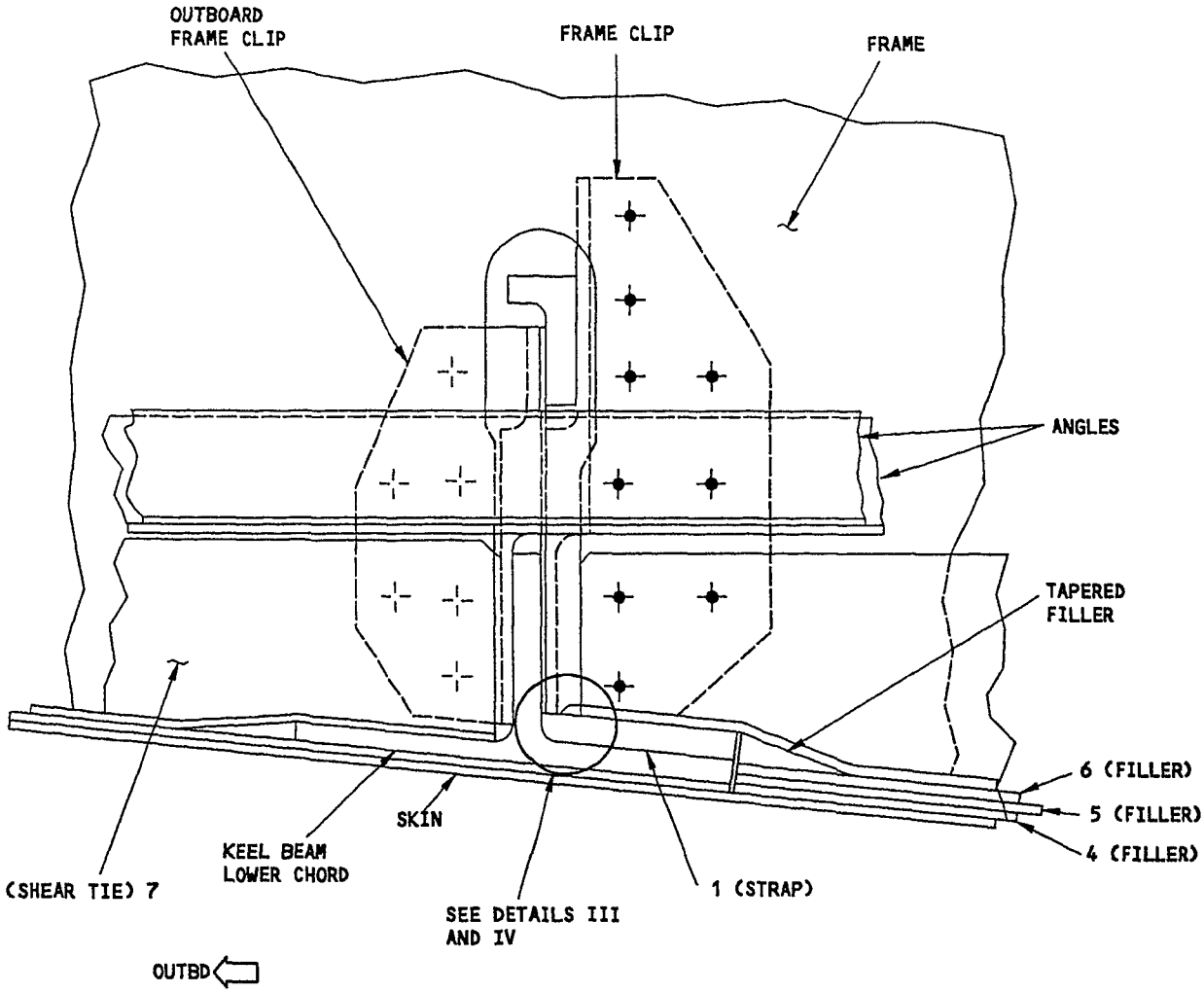

SECTION D-D

Keel Beam Lower Chord Repair - Inboard Flange
Figure 2 (Sheet 8)

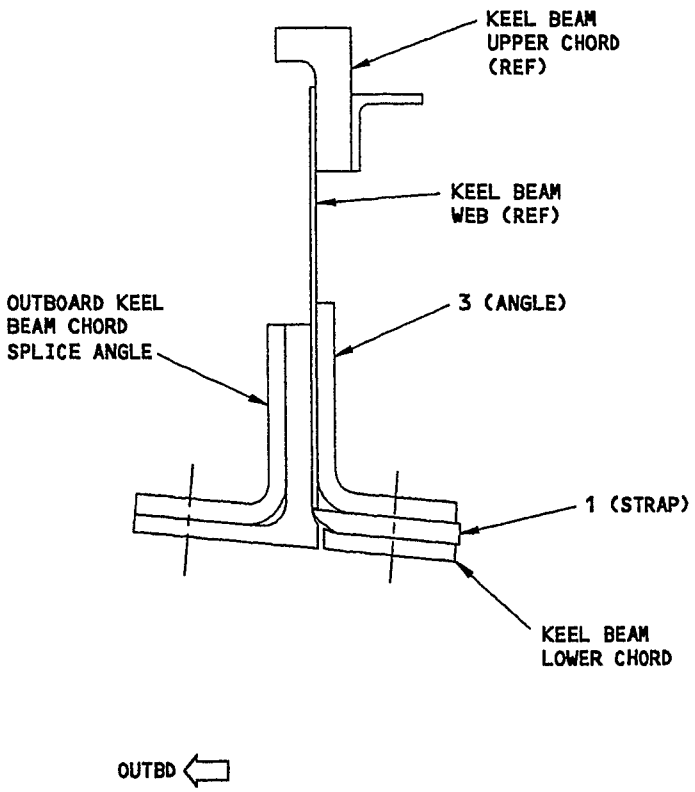

SECTION E-E

Keel Beam Lower Chord Repair - Inboard Flange
Figure 2 (Sheet 9)

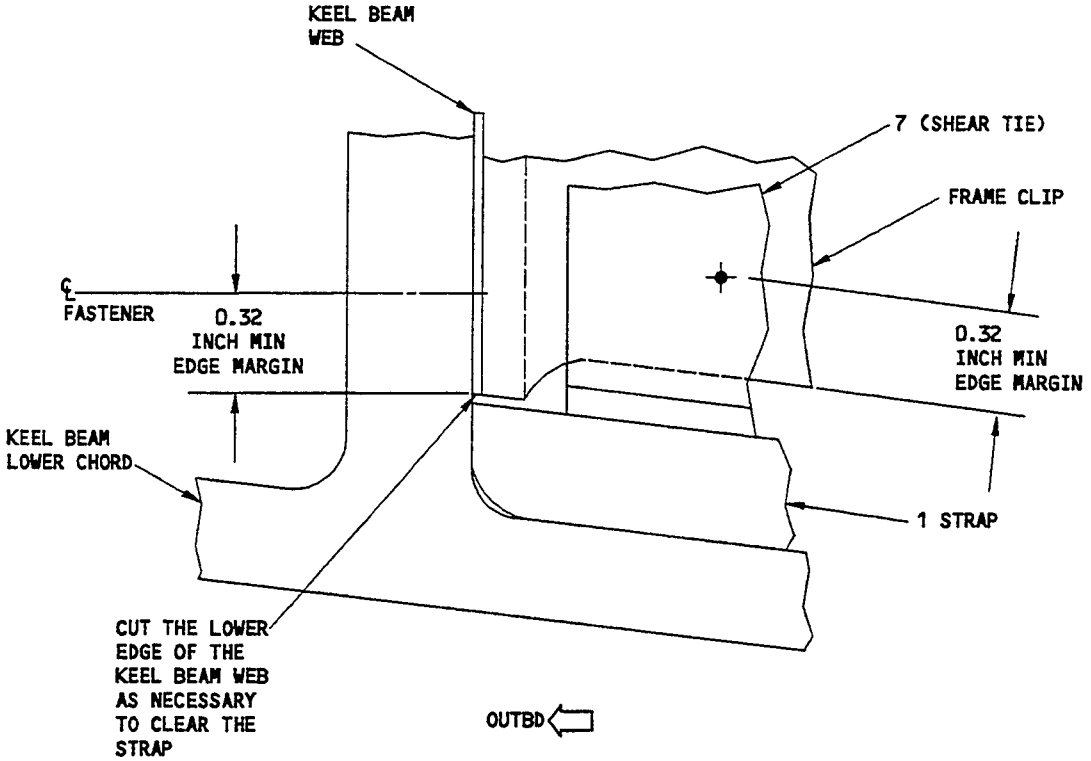

INSTALLATION OF THE FRAME CLIP
DETAIL III

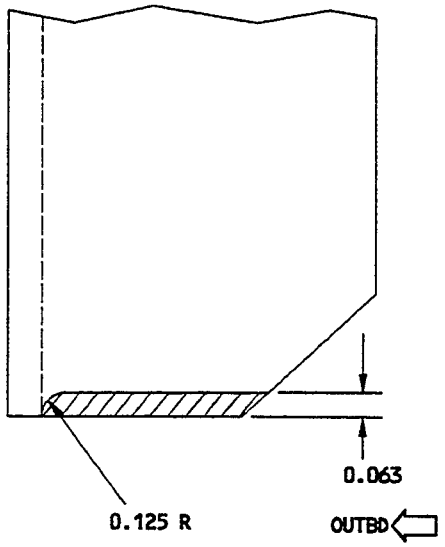

REAR VIEW
CUTOUT OF THE FRAME CLIP
DETAIL IV

Keel Beam Lower Chord Repair - Inboard Flange
Figure 2 (Sheet 10)

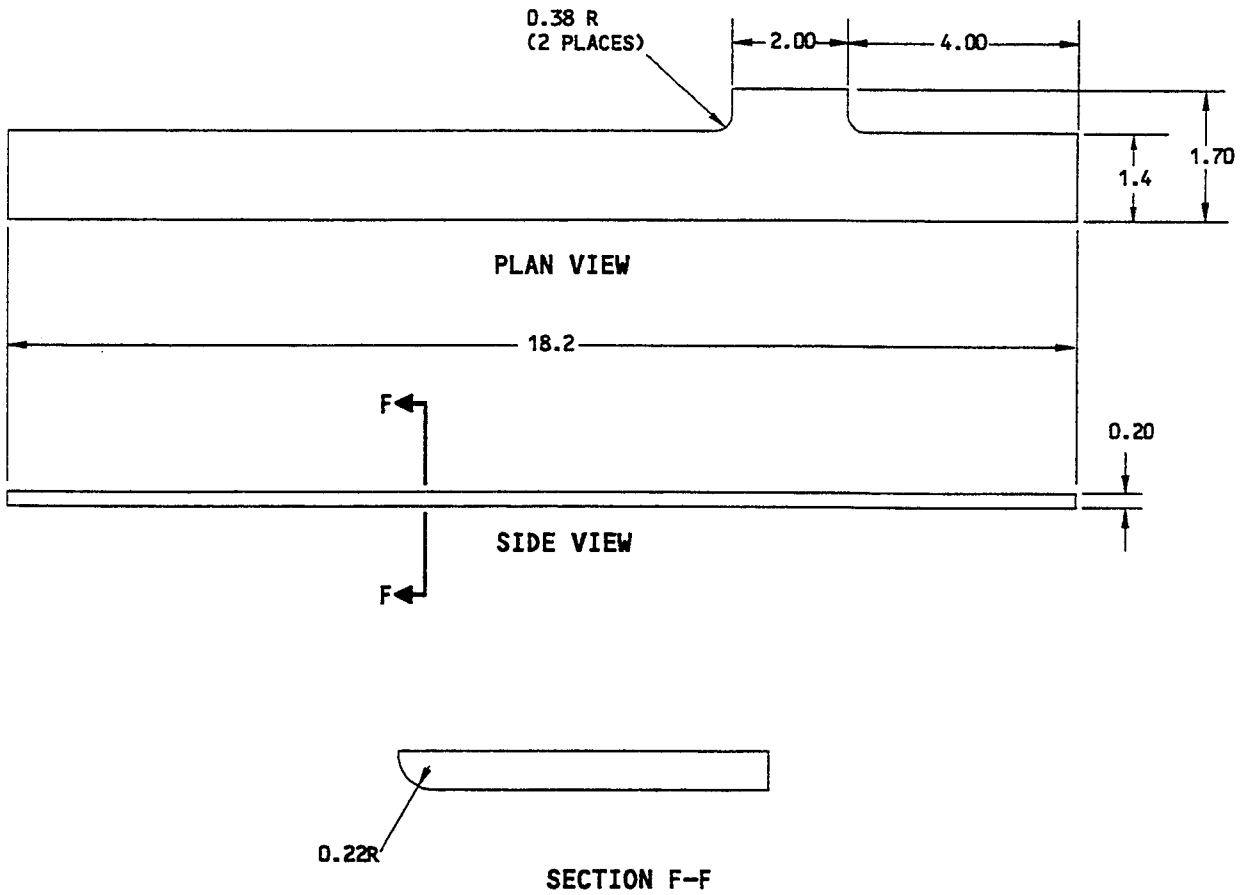

PART 1 STRAP

DETAIL V

Keel Beam Lower Chord Repair - Inboard Flange
Figure 2 (Sheet 11)

APPLICABILITY

THIS REPAIR APPLIES ONLY TO THE OUTBOARD AREA OF THE LOWER CHORD OF THE KEEL BEAM THREE FASTENERS FORWARD AND AFT OF BS 727.0 + 16.0.

TELL BOEING IF THE DAMAGE EXTENDS MORE THAN THREE FASTENER HOLES FORWARD OR AFT OF BS 727.0 + 16.0.

REFER TO FIGURE 2 TO REPAIR DAMAGE TO THE INBOARD FLANGE AT BS 727.0 + 16.0. IF NECESSARY, FIGURE 2 AND FIGURE 3 CAN BE USED AT THE SAME TIME.

REPAIR INSTRUCTIONS

1. To get access, go into the damaged area through the cargo door and remove the floor panels and cargo liner.
2. Remove these parts from the damaged area:
   - -The inboard splice angle
   - -The outboard splice angle
   - -The frame shear tie [A]
   - -The intercostal support channels

   See Detail II.
3. Do a high frequency eddy current test to make sure there are no cracks through these parts:
   - -The inboard splice angles
   - -The areas of the lower keel beam chord that attach to the splice angles
   - -The skin attached to the keel beam, in the repair area.

   Refer to NDT 51-00-00, Part 6, for the high frequency eddy current procedure. As an alternative, do a dye penetration inspection. Refer to SOPM 20-20-02.
4. Cut out the flange of the keel beam chord. Refer to Detail II. [B]

   NOTE: Use a thin piece of steel sheet as necessary to protect the fuselage skin. If the skin is damaged, refer to SRM 53-30-3 for a repair.
5. Do a high frequency eddy current test along the cutout area to make sure there are no cracks. If there are no cracks, make the cutout larger by 0.04 inch. Refer to SRM 51-10-1. Refer to NDT 51-00-00, Part 6, for the high frequency eddy current procedure.
6. Make the repair parts. Refer to Table II, and Details II and V.
7. Assemble the repair parts and drill the fastener holes as follows (Refer to Details II and V):

   A. Part 1 strap:
      - -Cut the parts of the frame web and frame clip to get the clearance necessary to install the part 1 strap. Refer to Detail III.
      - -Put the part 1 strap on the outboard horizontal keel beam chord flange.

   B. Part 2 filler and part 3 angle:
      - -Put the part 2 filler and the part 3 angle in position
      - -Drill the fastener holes
      - -Remove the repair parts.

   C. Part 4, part 5, part 6, fillers:
      - -Put the fillers in position on the skin.

   D. Part 7 shear tie:
      - -Cut and chamfer the shear tie as necessary
      - -Put the shear tie on the part 4, part 5 and part 6 fillers, and against the frame
      - -Install the tapered filler that was removed under the joggle of the shear tie
      - -Cut and chamfer the frame edge to be clear of the lower radius of the shear tie
      - -Drill the fastener holes
      - -Remove the repair parts.

   E. The frame clip:
      - -Cut the part as shown in Detail IV
      - -Put the part against the frame
      - -Drill the fastener holes
      - -Remove the part.
8. Remove the nicks, scratches, gouges, burrs, and sharp edges from the repair parts and the cut edges of the chord.
9. Apply a chemical conversion coating to:
   - -The repair parts
   - -The mating surfaces of the initial support channels, outboard splice angle, and tapered filler
   - -The cut edges of the chord.

   Refer to SRM 51-10-2.
10. Apply one layer of BMS 10-11, Type I primer to:
    - -The repair parts
    - -The mating surfaces of the initial support channels, outboard splice angle, and tapered filler
    - -The cut edges of the chord.

    Refer to SOPM 20-41-02.
11. Install repair washers in countersunk holes. Refer to SRM 51-30-8.
12. Install the repair parts and the initial parts with BMS 5-95 sealant on the mating surfaces.
13. Install the fasteners. Install the hex drive fasteners wet with BMS 5-95 sealant.
14. Apply one layer of BMS 3-23 corrosion inhibiting compound to the repair area. Refer to SRM 51-10-2.
15. Install the floor panels which were removed to get access to the damaged area.

Keel Beam Lower Chord Repair - Outboard Flange
Figure 3 (Sheet 1)

NOTES

- THIS REPAIR WILL NOT HAVE AN EFFECT ON A STRUCTURALLY SIGNIFICANT ITEM (SSI) GIVEN IN SRM 51-00-4, FIG. 3. THUS, NO CHANGE TO THE SUPPLEMENTAL STRUCTURAL INSPECTION DOCUMENT (SSID) INSPECTION PROGRAM IS NECESSARY.
- USE SHIMS TO KEEP THE GAPS 0.005 INCH OR LESS. USE MORE 2024-T3 CLAD OR 7075-T6 CLAD FILLERS AND LAMINATED SHIM STOCK AS NECESSARY.
- IF THE INITIAL FASTENER HOLE IS DAMAGED AND MUST BE OVERSIZED, USE AN APPLICABLE REPLACEMENT FASTENER GIVEN IN TABLE I.
- ALL DIMENSIONS ARE GIVEN IN INCHES.
- WHEN YOU USE THIS REPAIR REFER TO:
  - -AMM 51-21 FOR INTERIOR AND EXTERIOR FINISHES
  - -NDT 51-00-00, PART 6, FOR THE EDDY CURRENT PROCEDURES
  - -SOPM 20-20-02 FOR PENETRANT METHODS OF INSPECTION
  - -SOPM 20-41-02 FOR THE APPLICATION OF CORROSION RESISTANT PRIMER
  - -SRM 51-10-1 FOR DAMAGE CLASSIFICATION
  - -SRM 51-10-2 FOR PROTECTIVE TREATMENT OF METAL REPAIR PARTS
  - -SRM 51-20-4 FOR REPAIR SEALING
  - -SRM 51-30 FOR FASTENER CODE, REMOVAL, INSTALLATION, HOLE SIZES AND EDGE MARGINS
  - -SRM 51-30-8 FOR COUNTERSINKING AND COUNTERSINK WASHERS

[A] REMOVE THE TAPERED FILLER WHICH FILLS THE GAP BETWEEN THE FRAME SHEAR TIE AND THE LOWER CHORD FLANGE.

[B] CUT OUT THE MINIMUM QUANTITY OF MATERIAL NECESSARY TO REMOVE THE CRACK.

[C] THE PART 7 TEE SHEAR TIE REPLACES THE INITIAL FRAME SHEAR TIE.

[D] THE LOWER EDGES OF THE PART 7 SHEAR TIE AND THE FRAME CLIP MUST BE CUT TO PERMIT THE MAXIMUM POSSIBLE EDGE MARGIN. SEE DETAILS III AND IV.

[E] THIS IS A TYPICAL KEEL BEAM ASSEMBLY. THE FASTENER LOCATIONS THAT ARE THE SAME IN PARTS 4, 5, 6 AND 7 CAN BE DIFFERENT FOR DIFFERENT INSTALLATIONS. ADJUST THE FASTENER LOCATIONS, AND THE SHAPE AND DIMENSIONS OF THE REPAIR PARTS TO THE INSTALLATION.

FASTENER SYMBOLS

REFERENCE FASTENER LOCATION.

REPAIR FASTENER LOCATION. INSTALL A BACR15BB5D RIVET.

INITIAL FASTENER LOCATION INSTALL A BACB30FQ6A HEX DRIVE BOLT AND A BACC30M6 COLLAR.

INITIAL FASTENER LOCATION INSTALL A BACB30KK10A HEX DRIVE BOLT AND A BACC30R10 COLLAR.

INITIAL FASTENER LOCATION INSTALL A BACB30FM8A HEX DRIVE BOLT AND A BACC30M8 COLLAR.

INITIAL FASTENER LOCATION INSTALL A FASTENER AS GIVEN IN TABLE I. USE THE SAME DIAMETER AS THE INITIAL FASTENER.

REPAIR FASTENERS		
INITIAL FASTENER	REPAIR FASTENER (PREFERRED)	REPAIR FASTENER (FOR HOLE CLEANUP, 1/32 INCH MAX OVERSIZE)
PROTRUDING HEAD RIVET	BACR15BB()D	BACR15ET()D
HEX DRIVE BOLT OR LOCKBOLT	BACB30FP()A WITH A BACC30M COLLAR	BACB30KK()A WITH A BACC30R COLLAR
COUNTERSINK RIVET	BACR15CE()D	BACR15DS()D

TABLE I

Keel Beam Lower Chord Repair - Outboard Flange
Figure 3 (Sheet 2)

BOEING PROPRIETARY - Copyright © - Unpublished Work - See title page for details.

REPAIR MATERIAL			
PART	DESCRIPTION	QTY	MATERIAL
1	STRAP	1	MODIFIED 0.20 X 1.90 X 18.19 7075-T6 BARE SHEET (AS AN ALTERNATIVE, MACHINE THE PART FROM A 7075-T6 EXTRUDED BAR. SHOT PEEN OR FLAP PEEN THE PART) SEE DETAIL V
2	FILLER	1	7075-T6 CLAD (MACHINE TO ALIGN WITH THE CUTOUT IN THE LOWER CHORD FLANGE)
3	ANGLE	1	USE BOEING PART NO. 65-45866-506
4	FILLER	1	0.071 X 5.9 X 10.5 2024-T3 CLAD
5	FILLER	1	0.063 X 4.0 X 9.8 2024-T3 CLAD
6	FILLER	1	0.063 X 1.8 X 9.8 2024-T3 CLAD
7	TEE SHEAR TIE [C]	1	USE THE SAME BOEING PART NO. USED FOR THE INITIAL SHEAR TIE, EXCEPT THE PART MUST HAVE NO HOLES. DO NOT DRILL THE PILOT HOLES.

TABLE II

Keel Beam Lower Chord Repair - Outboard Flange
Figure 3 (Sheet 3)

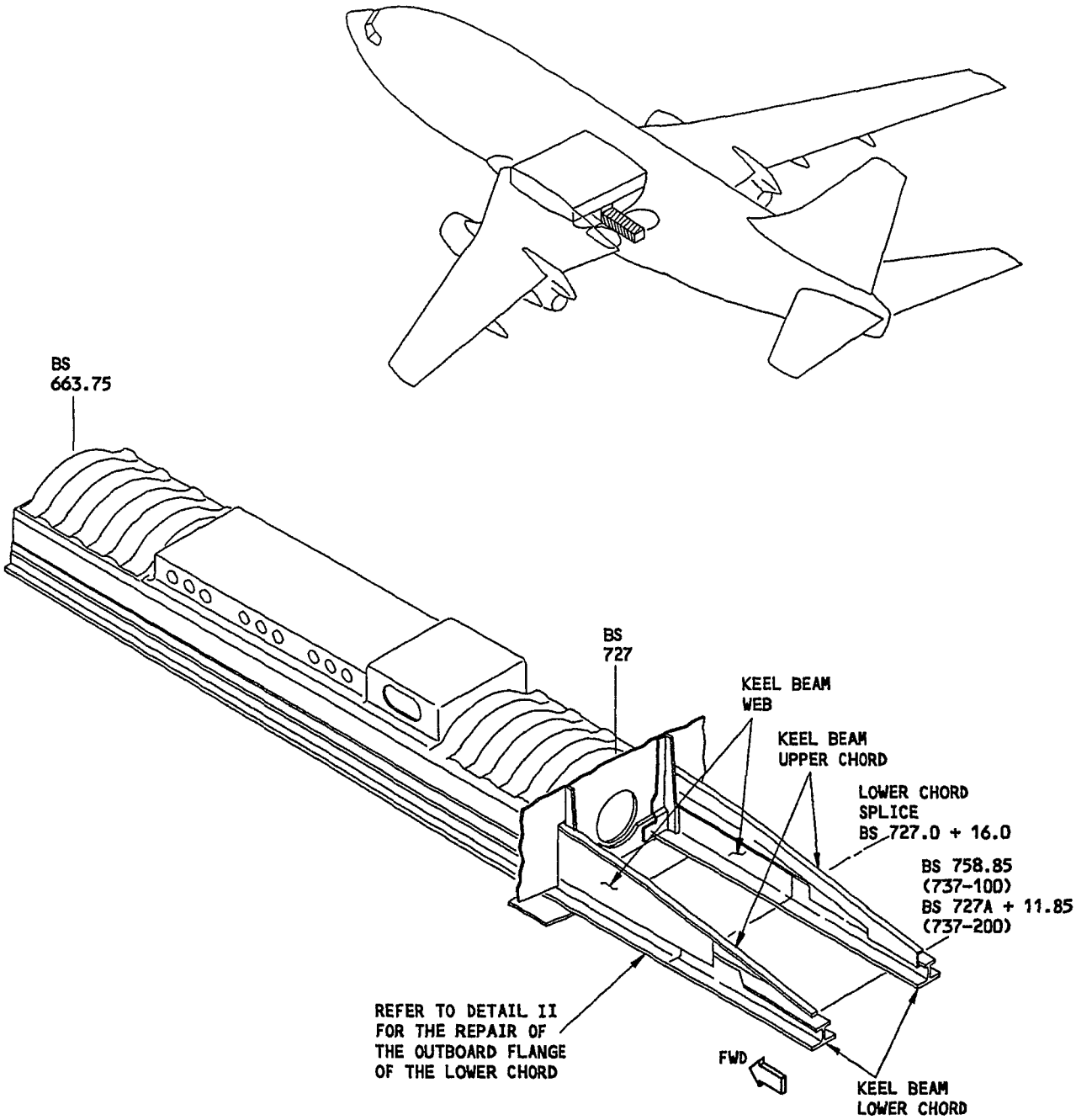

VIEW OF THE KEEL BEAM
AFT OF THE REAR SPAR
DETAIL I

Keel Beam Lower Chord Repair - Outboard Flange
Figure 3 (Sheet 4)

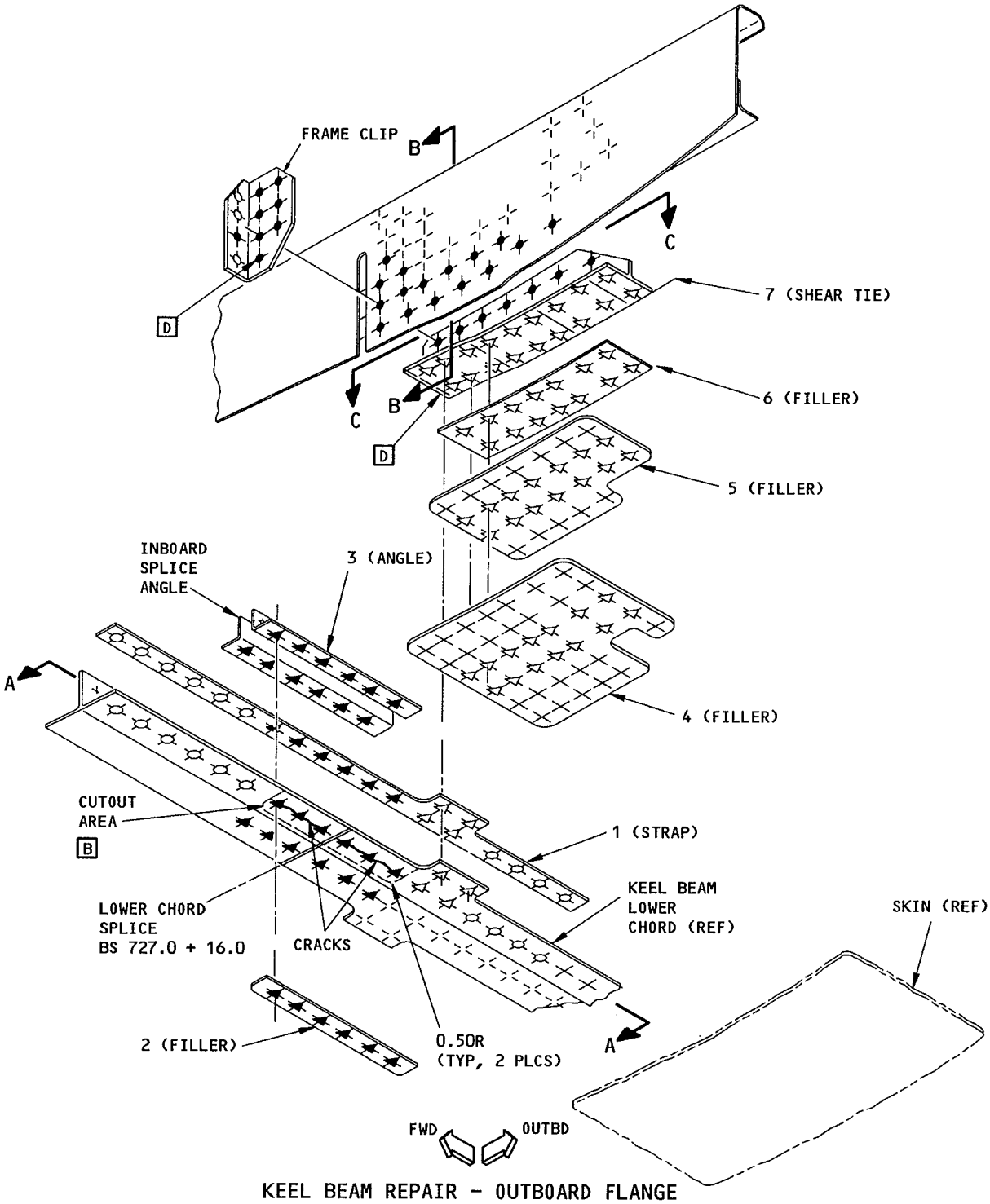

KEEL BEAM REPAIR - OUTBOARD FLANGE
DETAIL II E

Keel Beam Lower Chord Repair - Outboard Flange
Figure 3 (Sheet 5)

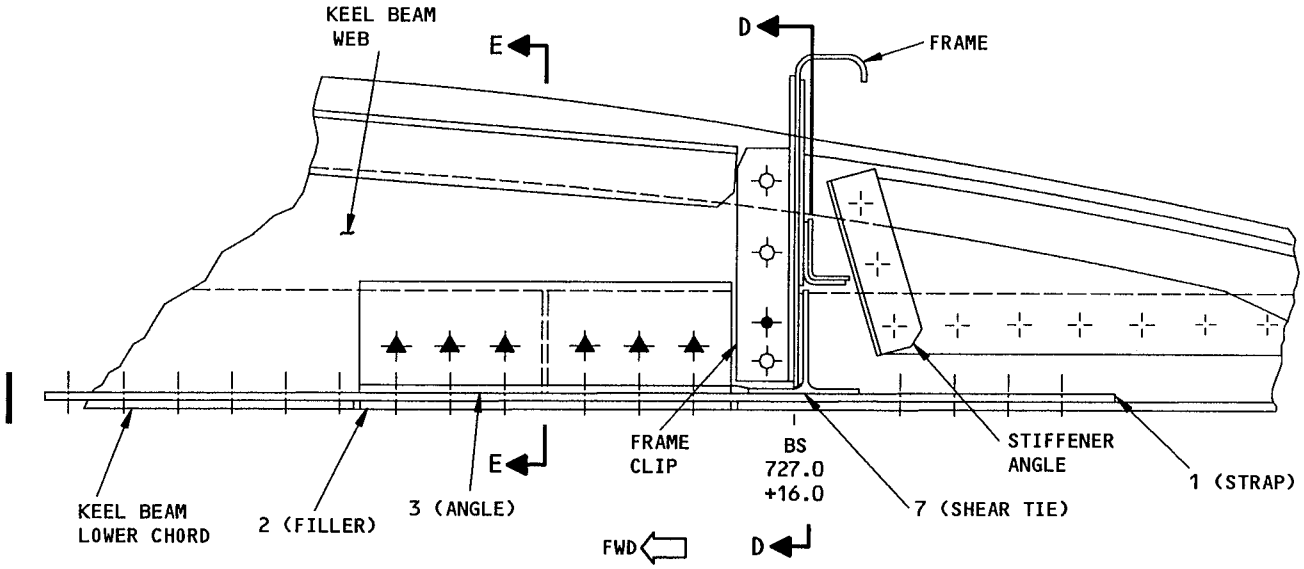

SECTION A-A

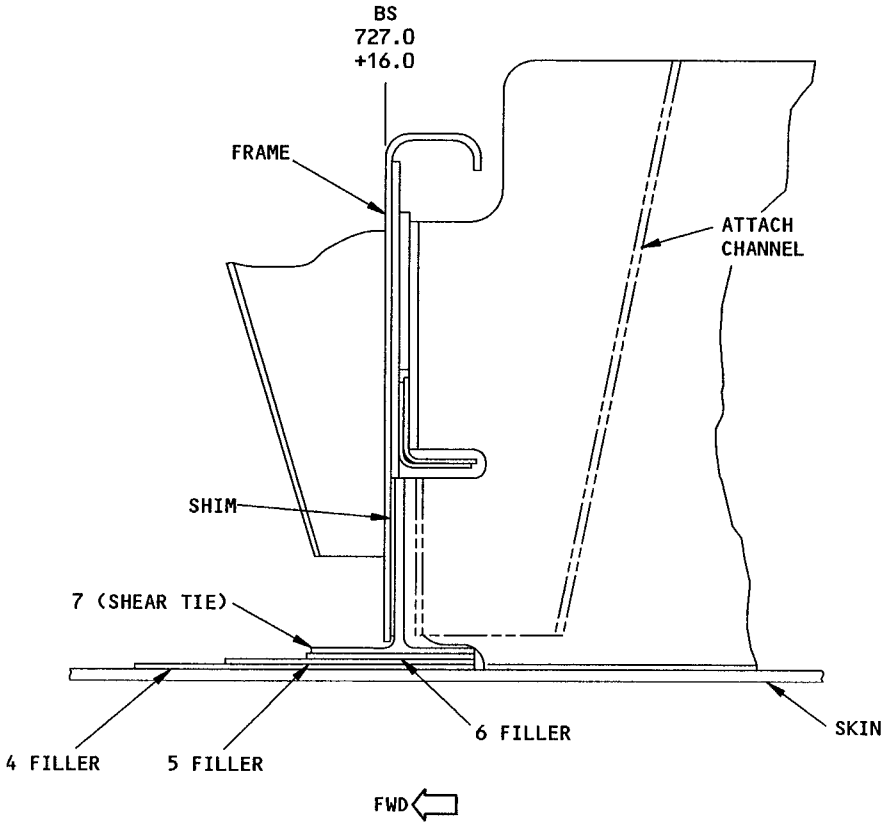

SECTION B-B

Keel Beam Lower Chord Repair - Outboard Flange
Figure 3 (Sheet 6)

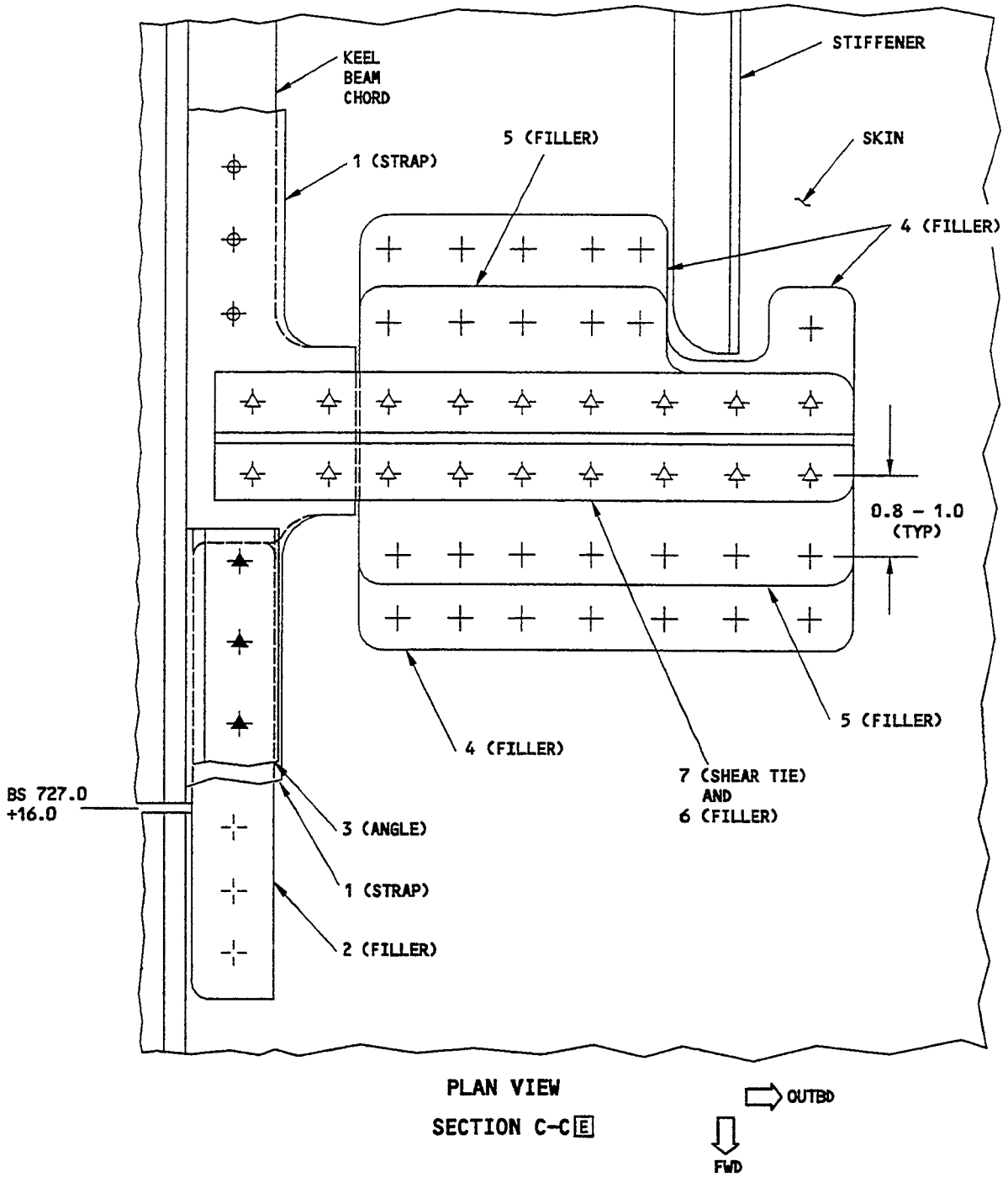

Keel Beam Lower Chord Repair - Outboard Flange
Figure 3 (Sheet 7)

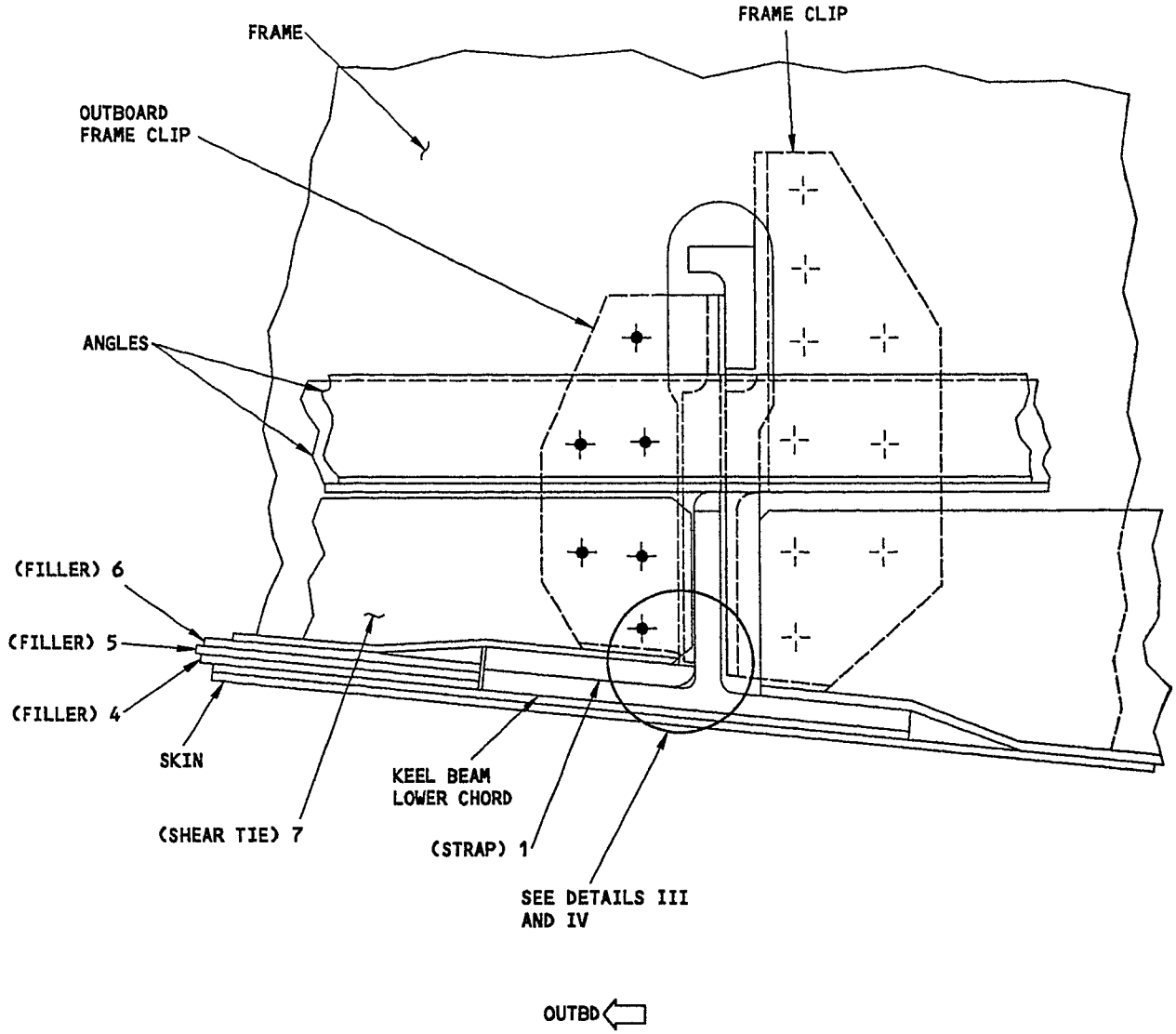

SECTION D-D

Keel Beam Lower Chord Repair - Outboard Flange
Figure 3 (Sheet 8)

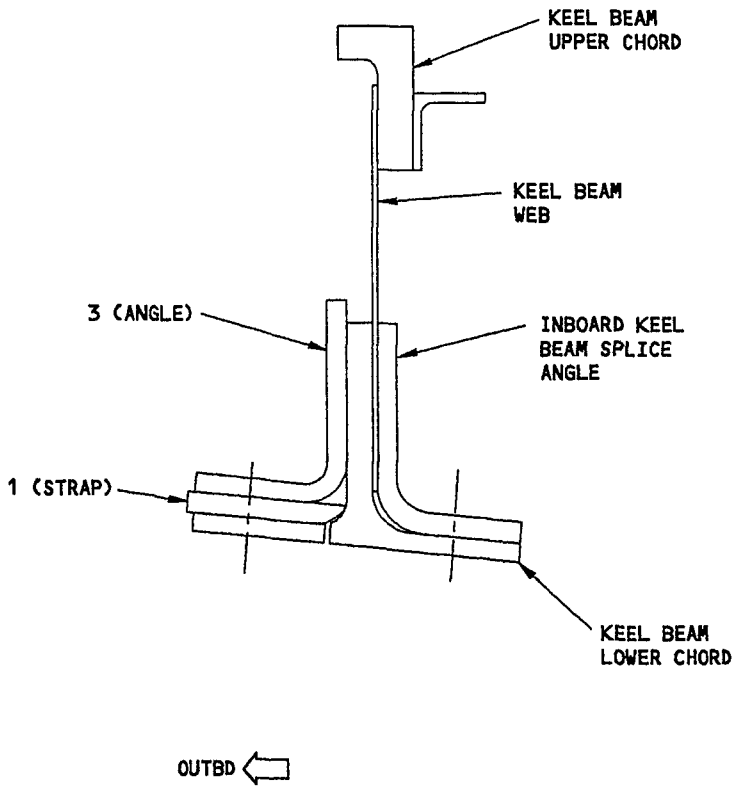

SECTION E-E

Keel Beam Lower Chord Repair - Outboard Flange
Figure 3 (Sheet 9)

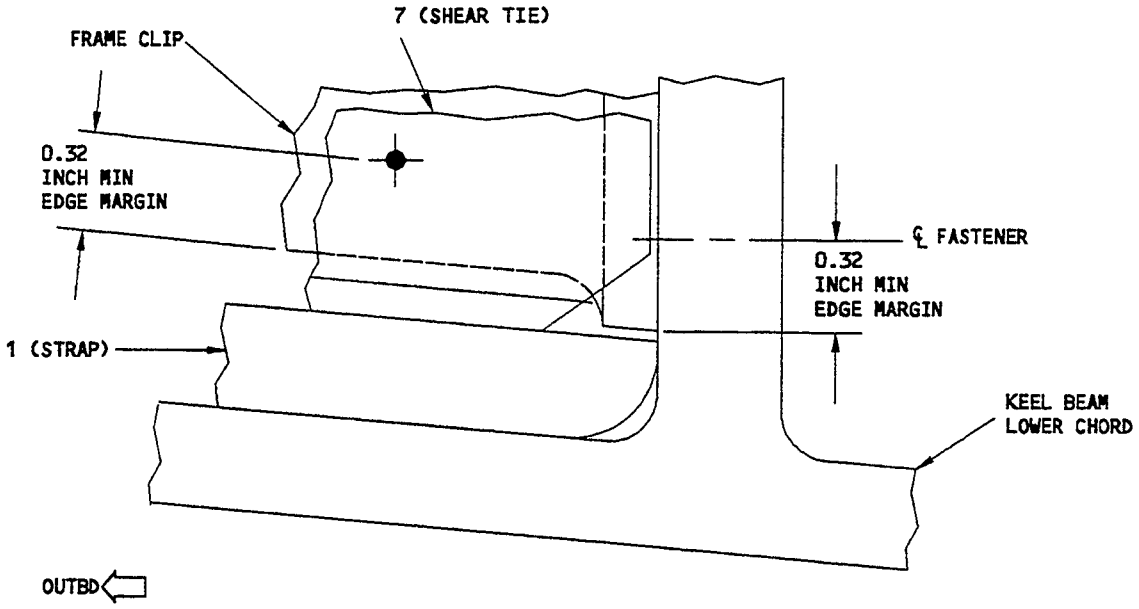

INSTALLATION OF THE FRAME CLIP AND THE SHEAR TIE
DETAIL III

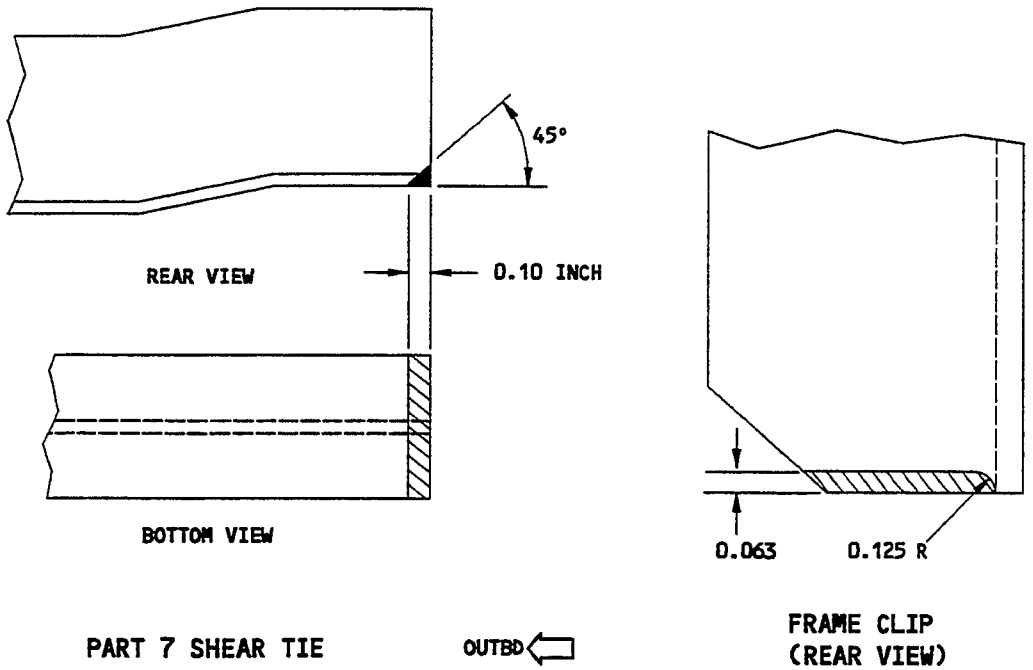

CUTOUT OF THE FRAME CLIP AND THE SHEAR TIE
DETAIL IV

Keel Beam Lower Chord Repair - Outboard Flange
Figure 3 (Sheet 10)

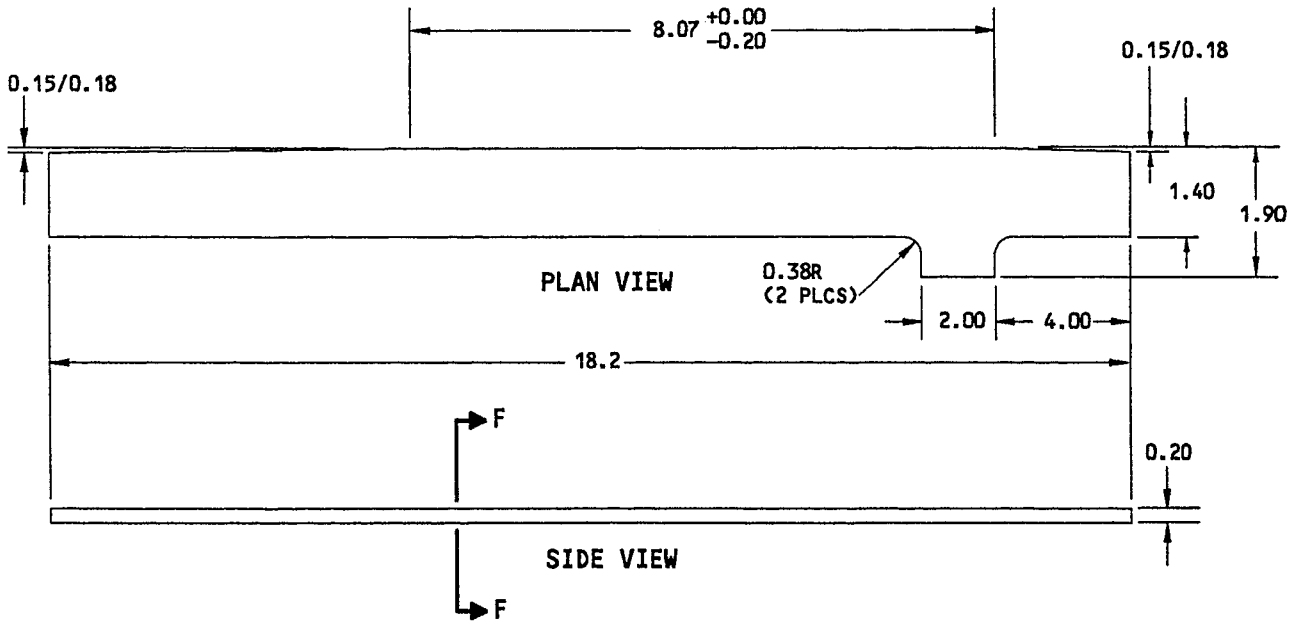

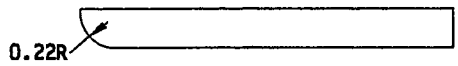

SECTION F-F

PART I STRAP

DETAIL IV

Keel Beam Lower Chord Repair - Outboard Flange
Figure 3 (Sheet 11)

Figure 1 is changed to Figure 2
in SRM 53-10-12

Figure 1 is changed to Figure 2
in SRM 53-10-12

SERVICE BULLETIN REPAIRS - WHEEL WELLS

The following Service Bulletins contain repairs which are available for use where specific damage has been encountered. Usually, the Service Bulletin also covers preventive modification data which operators are encouraged to use to eliminate the need for repair.

DAMAGED AREA	CUM LINE NUMBER EFFECTIVITY [A]	SB NUMBER
NOSE WHEEL WELL UPPER PANEL CRACK DAMAGE	1 THRU 374	53-1079
FUSELAGE - NOSE LANDING GEAR RETRACT ACTUATOR SUPPORT FITTING INSPECTION AND REPLACEMENT	1 THRU 446	53-1119
WING - MAIN WHEEL WELL PRESSURE WEB-TO-FLOOR BEAM INSPECTION, REPAIR, AND MODIFICATION	1 THRU 345	57-1083
FUSELAGE - FLIGHT COMPARTMENT FLOOR AND NOSE LANDING GEAR VIEWING TUBE CHANNEL SUPPORT - INSPECTION, PREVENTIVE CHANGE, AND REPAIR	ALL 737-100/200 AIRPLANES	53-1162

[A] FOR AIRPLANES ON WHICH PREVENTIVE MODIFICATION HAS NOT BEEN ACCOMPLISHED

STRUCTURAL REPAIR

SERVICE BULLETIN REPAIRS

The following Service Bulletins contain floor structure repairs which are available for use where specific damage has been encountered. Usually, the Service Bulletin also covers preventive modification data which operators are encouraged to use to eliminate the need for repair.

DAMAGED AREA	CUM LINE NUMBER EFFECTIVITY [A]	SB NUMBER
FUSELAGE - BS 277 FRAME AND BS 294.5 FLOOR BEAM INSPECTION AND REINFORCEMENT	1 THRU 1207	737-53-1090
FUSELAGE - OVERWING FRAME BS 559 THRU BS 639	1 THRU 842	737-53-1061
WING - MAIN WHEEL WELL PRESSURE FLOOR TRANSVERSE BEAMS AND FLOOR BEAMS INSPECTION AND MODIFICATION	1 THRU 1585	737-57-1139
WING - CENTER WING BOX - FLOOR BEAM INSPECTION, MODIFICATION AND REPAIR	1 THRU 1585	737-57-1210
FUSELAGE - BODY STATION 727 BULKHEAD COMPRESSION CHORD INSPECTION, REPAIR AND MODIFICATION	1 THRU 540	737-57-1053
FUSELAGE - BODY STATION 727 BULKHEAD COMPRESSION CHORD INSPECTION, REPAIR AND MODIFICATION	541 THRU 990	737-53-1072

[A] FOR AIRPLANES ON WHICH PREVENTIVE MODIFICATION HAS NOT BEEN ACCOMPLISHED

BOEING PROPRIETARY - Copyright © - Unpublished Work - See title page for details.

REPAIR INSTRUCTIONS

1. Remove the floor panels as necessary to get access to the damaged area.
2. Remove the adjacent structure as necessary to get access to the damaged area.
3. Cut out the damaged area as shown in Detail I.
4. Make the repair parts. See Detail I for example.
5. Put the repair parts into position and drill the fastener holes as shown in Detail I. Fastener hole diameters at the floor panel fastener locations are to be 0.250 to 0.261.
6. Remove the repair parts.
7. Remove all of the nicks, scratches, gouges, and burrs from the repair parts and the cut edges of the floor beam.
8. Make a 0.015 to 0.030 radius on the sharp edges of the repair parts and the cut edges of the floor beam.
9. Clean the repair parts and the cut edges of the floor beam and apply Alodine. Refer to SRM 51-10-2.
10. Apply a finish to the repair parts and the cut edges of the floor beam. Refer to AMM 51-21.
    A. Apply one coat of BMS 10-11, Type I primer.
    B. Apply one coat of BMS 10-11, Type II enamel, color 702 white gloss.
11. Install the repair parts.
    A. Make the faying surface seals with BMS 5-95 sealant.
    B. Install the fasteners wet with BMS 5-95 sealant.
12. Apply post assembly touch up finish to the repair area. Refer to AMM 51-21.
    A. Apply one coat of BMS 10-11, Type I primer.
    B. Apply one coat of BMS 10-11, Type II enamel, color 702 white gloss.
13. Install the adjacent structure which was removed to get access to the damaged area.
14. Install the floor panels which were removed to get access to the damaged area. The following steps apply to all the holes common to the floor panel attachments.
    A. Clean the holes prior to applying Alodine. Refer to SRM 51-10-2.
    B. Apply Alodine in the holes. Refer to SRM 51-10-2.
    C. Apply one coat of BMS 10-11, Type I primer in the holes. Refer to AMM 51-21.
    D. Apply BMS 3-24 grease in all the holes prior to installing the clip-on nuts.
    E. Install a clip-on nut at each hole.
    F. Install the floor panel fasteners wet with BMS 3-24 grease and torque to 20-25 in-lbs.

Section 41 and 43 Floor Beam Upper Chord Repair
Figure 1 (Sheet 1)

NOTES

- THIS REPAIR APPLIES ONLY TO DAMAGE ON THE UPPER CHORD OF A BAC1518-338 EXTRUSION FLOOR BEAM.
- THIS REPAIR WILL NOT HAVE AN EFFECT ON A STRUCTURALLY SIGNIFICANT ITEM (SSI) GIVEN IN SRM 51-00-4, FIG. 3. THUS, NO CHANGE TO THE SUPPLEMENTAL STRUCTURAL INSPECTION DOCUMENT (SSID) INSPECTION PROGRAM IS NECESSARY.
- WHEN YOU USE THIS REPAIR REFER TO:
  - AMM 51-21 FOR INTERIOR AND EXTERIOR FINISHES
  - SRM 51-10-1 FOR INVESTIGATION AND CLEANUP OF DAMAGE
  - SRM 51-10-2 FOR PROTECTIVE TREATMENT OF METAL
  - SRM 51-20-4 FOR SEALING OF REPAIRS
  - SRM 51-30 FOR FASTENER CODE, REMOVAL, INSTALLATION, HOLE SIZES AND EDGE MARGINS.

[A] THE EXTERNAL RADII ON THE REPAIR PARTS ARE TO BE 0.375 R UNLESS DIFFERENTLY SPECIFIED.

[B] BEND THE REPAIR ANGLES IN THE ANNEALED CONDITION, THEN HEAT TREAT AS SPECIFIED.

[C] THE REPAIR PARTS MUST NOT CAUSE A BLOCKAGE OF ANY FLOOR BEAM HOLES. MAKE THE CUTOUTS IN THE REPAIR PARTS THE SAME SHAPE AS THE HOLES THEY MUST GO AROUND IN THE FLOOR BEAM.

[D] ADJUST THE REPAIR PART LENGTHS AND THE DISTANCE BETWEEN REPAIR FASTENERS TO INCLUDE THE FLOOR PANEL FASTENER ATTACH LOCATIONS.

[E] FILL THE GAP WITH BMS 5-95 SEALANT.

FASTENER SYMBOLS

REPAIR FASTENER LOCATION. INSTALL A BACB30FM6 BOLT AND A BACC30M6 COLLAR (OPTIONAL: BACB30VT6K() BOLT AND A BACC30BL COLLAR).

FLOOR PANEL FASTENER LOCATION. INSTALL A BACN10FX() CLIP-ON NUT AND THE SAME TYPE AND SIZE FLOOR PANEL FASTENER AS THE ONE THAT WAS REMOVED.

REPAIR FASTENER LOCATION. INSTALL A BACB30FN6 BOLT AND A BACC30M6 COLLAR (OPTIONAL: BACB30VU6K() BOLT AND A BACC30BL COLLAR).

REPAIR MATERIAL			
PART		QTY	MATERIAL
1	REPAIR SECTION	1	BAC1505-100617 7075-T73
2	SUPPORT ANGLE	1	0.063 INCH THICK CLAD 7075-0 [B] HT TR TO -T6 (BAC1490-2734 7075-T6, OPT)
3	SUPPORT ANGLE	1	0.071 INCH THICK CLAD 7075-0 [B] HT TR TO -T6 (BAC1490-2865 7075-T6, OPT)
4	STRAP	1	0.071 INCH THICK CLAD 7075-T6
5	STRAP	1	0.063 INCH THICK CLAD 7075-T6

Section 41 and 43 Floor Beam Upper Chord Repair
Figure 1 (Sheet 2)

BOEING PROPRIETARY - Copyright © - Unpublished Work - See title page for details.

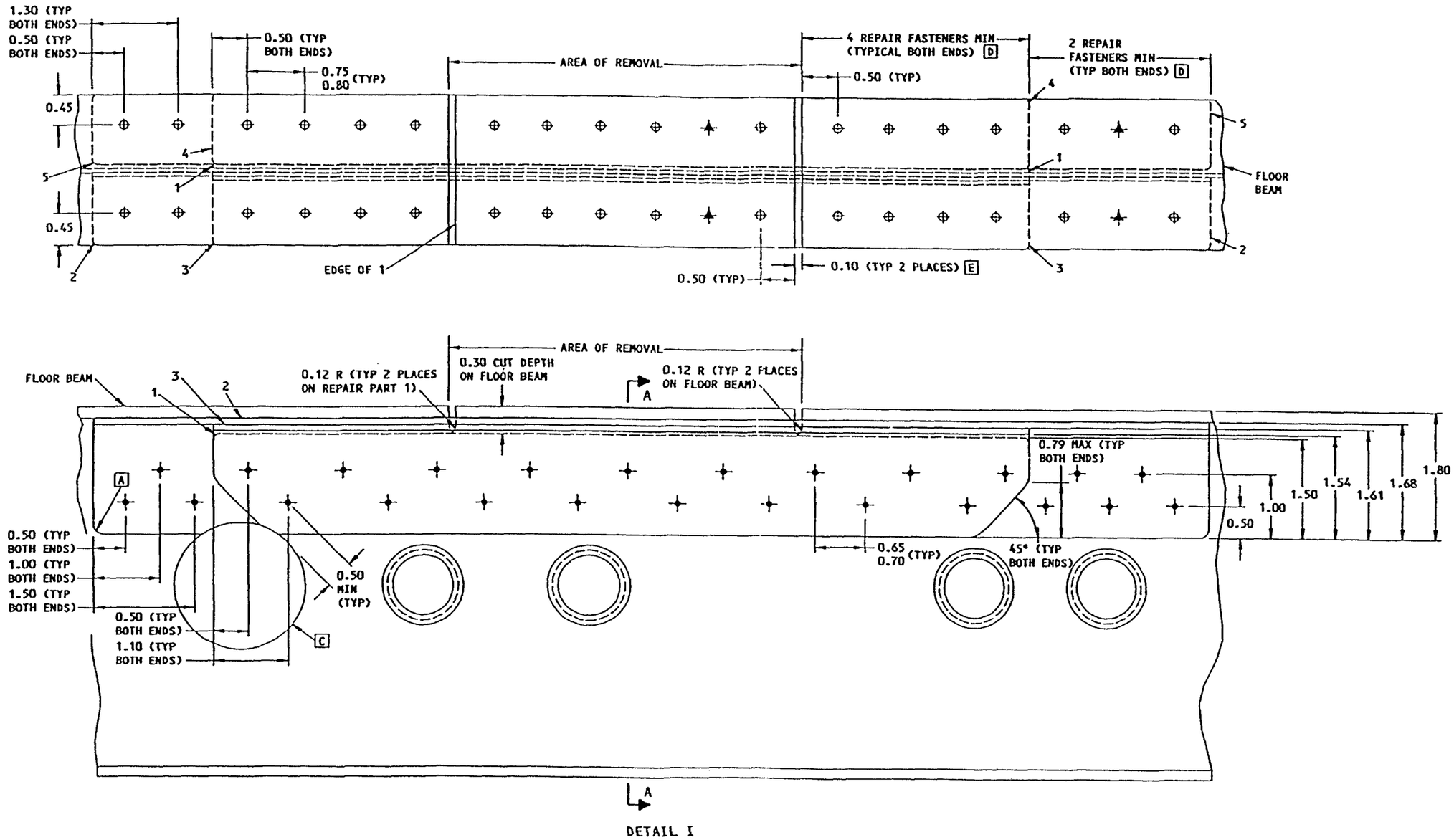

Section 41 and 43 Floor Beam Upper Chord Repair
Figure 1 (Sheet 3)

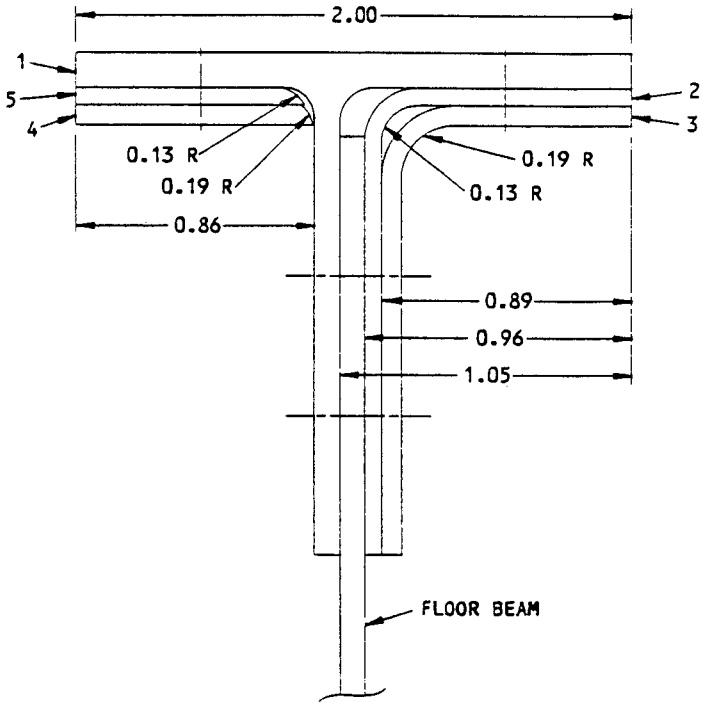

SECTION A-A

Section 41 and 43 Floor Beam Upper Chord Repair
Figure 1 (Sheet 4)

REPAIR INSTRUCTIONS

1. Remove the floor panels as necessary to get access to the damaged area.
2. Remove the adjacent structure as necessary to get access to the damaged area.
3. Cut out the damaged area as shown in Detail I.
4. Make the repair parts. See Detail I for example.
5. Put the repair parts into position and drill the fastener holes as shown in Detail I. Fastener hole diameters at the floor panel fastener locations are to be 0.250 to 0.261.
6. Remove the repair parts.
7. Remove all of the nicks, scratches, gouges, and burrs from the repair parts and the cut edges of the floor beam.
8. Make a 0.015 to 0.030 radius on the sharp edges of the repair parts and the cut edges of the floor beam.
9. Apply a chemical conversion coating to the repair parts and to the bare surfaces of the initial floor beam. Refer to SRM 51-10-2.
10. Apply a finish to the repair parts and the cut edges of the floor beam. Refer to 51-21 of the Maintenance Manual.
    A. Apply two coats of BMS 10-11, Type I primer.
    B. It is optional to apply one coat of BMS 10-11, Type II enamel, color 702 white gloss.
11. Install the repair parts.
    A. Make the faying surface seals with BMS 5-95 sealant.
    B. Install the fasteners wet with BMS 5-95 sealant.
12. Apply post assembly touch up finish to the repair area. Refer to 51-21 of the Maintenance Manual.
    A. Apply two coats of BMS 10-11, Type I primer.
    B. It is optional to apply one coat of BMS 10-11, Type II enamel, color 702 white gloss.
13. Install the adjacent structure which was removed to get access to the damaged area.
14. Install the floor panels which were removed to get access to the damaged area. The following steps apply to all the holes common to the floor panel attachments.
    A. Clean the holes prior to applying Alodine. Refer to SRM 51-10-02.
    B. Apply Alodine in the holes. Refer to 51-10-02.
    C. Apply one coat of BMS 10-11, Type I primer in the holes. Refer to 51-21 of the Maintenance Manual.
    D. Apply MIL-C-11796 Class 3 grease in all the holes prior to installing the clip-on nuts.
    E. Install a clip-on nut at each hole.
    F. Install the floor panel fasteners wet with MIL-C-11796 Class 3 grease and torque to 20-35 in-lbs.

Section 46 Floor Beam Upper Chord Repair
Figure 2 (Sheet 1)

NOTES

- THIS REPAIR APPLIES ONLY TO DAMAGE ON THE UPPER CHORD OF A BAC1518-399 EXTRUSION FLOOR BEAM. THE DAMAGE AREA OR REPAIR PARTS CAN NOT EXTEND TO THE FUSELAGE FRAME OR GO UNDER A SEAT TRACK. FOR FLOOR BEAM DAMAGE UNDER A SEAT TRACK OF THIS EXTRUSION, REFER TO SRM 53-10-9 FIG. 3.
- THIS REPAIR WILL NOT HAVE AN EFFECT ON A STRUCTURALLY SIGNIFICANT ITEM (SSI) GIVEN IN SRM 51-00-4, FIG. 3. THUS, NO CHANGE TO THE SUPPLEMENTAL STRUCTURAL INSPECTION DOCUMENT (SSID) INSPECTION PROGRAM IS NECESSARY.
- WHEN YOU USE THIS REPAIR REFER TO:
  - AMM 51-21 FOR INTERIOR AND EXTERIOR FINISHES
  - SRM 51-10-1 FOR INVESTIGATION AND CLEANUP OF DAMAGE
  - SRM 51-10-2 FOR PROTECTIVE TREATMENT OF METAL
  - SRM 51-20-4 FOR SEALING OF REPAIRS
  - SRM 51-30 FOR FASTENER CODE, REMOVAL, INSTALLATION, HOLE SIZES AND EDGE MARGINS.

[A] THE EXTERNAL RADII ON THE REPAIR PARTS ARE TO BE 0.375 INCH R UNLESS DIFFERENTLY SPECIFIED.

[B] BEND THE REPAIR ANGLES IN THE ANNEALED CONDITION, THEN HEAT TREAT AS SPECIFIED.

[C] THE REPAIR PARTS MUST NOT CAUSE A BLOCKAGE OF ANY FLOOR BEAM HOLES. MAKE THE CUTOUTS IN THE REPAIR PARTS THE SAME SHAPE AS THE HOLES THEY MUST GO AROUND IN THE FLOOR BEAM.

[D] ADJUST THE REPAIR PART LENGTHS AND THE DISTANCE BETWEEN REPAIR FASTENERS TO INCLUDE THE FLOOR PANEL FASTENER ATTACH LOCATIONS. DO NOT INCLUDE A FLOOR PANEL FASTENER IN THE NUMBER OF REPAIR FASTENERS NECESSARY FOR A GIVEN AREA.

[E] FILL THE GAP WITH BMS 5-95 SEALANT.

[F] FOR LARGE DAMAGE AREAS, IT IS PERMITTED TO REPAIR THE FLOOR BEAMS AS SHOWN IN DETAIL II.

FASTENER SYMBOLS

REPAIR FASTENER LOCATION. INSTALL A BACB30FM6 BOLT AND A BACC30M6 COLLAR (OPTIONAL: BACB30VT6K() BOLT AND A BACC30BL COLLAR).

FLOOR PANEL FASTENER LOCATION. INSTALL A BACN10FX() CLIP-ON NUT AND THE SAME TYPE AND SIZE FLOOR PANEL FASTENER AS THE ONE THAT WAS REMOVED.

REPAIR FASTENER LOCATION. INSTALL A BACB30FN6 BOLT AND A BACC30M6 COLLAR (OPTIONAL: BACB30VU6K() BOLT AND A BACC30BL COLLAR).

REPAIR MATERIAL FOR DETAIL I			
PART		QTY	MATERIAL
1	REPAIR SECTION	1	BAC1505-100617 [F] 7075-T73
2	SUPPORT ANGLE	1	0.063 INCH THICK CLAD 7075-0 [B] HT TR TO -T6 (BAC1490-2734 7075-T6, OPT)
3	SUPPORT ANGLE	1	0.071 INCH THICK CLAD 7075-0 [B] HT TR TO -T6 (BAC1490-2865 7075-T6, OPT)
4	STRAP	1	0.071 INCH THICK CLAD 7075-T6
5	STRAP	1	0.063 INCH THICK CLAD 7075-T6

TABLE I

REPAIR MATERIAL FOR DETAIL II			
PART		QTY	MATERIAL
1	REPAIR SECTION	1	BAC1505-100617 MATERIAL AND HEAT TREAT SAME AS INITIAL BEAM
2	SUPPORT ANGLE	2	0.063 INCH THICK CLAD 7075-0 [B] HT TR TO -T6 (BAC1490-2734 7075-T6, OPT)
3	SUPPORT ANGLE	2	0.071 INCH THICK CLAD 7075-0 [B] HT TR TO -T6 (BAC1490-2865 7075-T6, OPT)
4	STRAP	2	0.071 INCH THICK CLAD 7075-T6
5	STRAP	2	0.063 INCH THICK CLAD 7075-T6

TABLE II

Section 46 Floor Beam Upper Chord Repair
Figure 2 (Sheet 2)

BOEING PROPRIETARY - Copyright © - Unpublished Work - See title page for details.

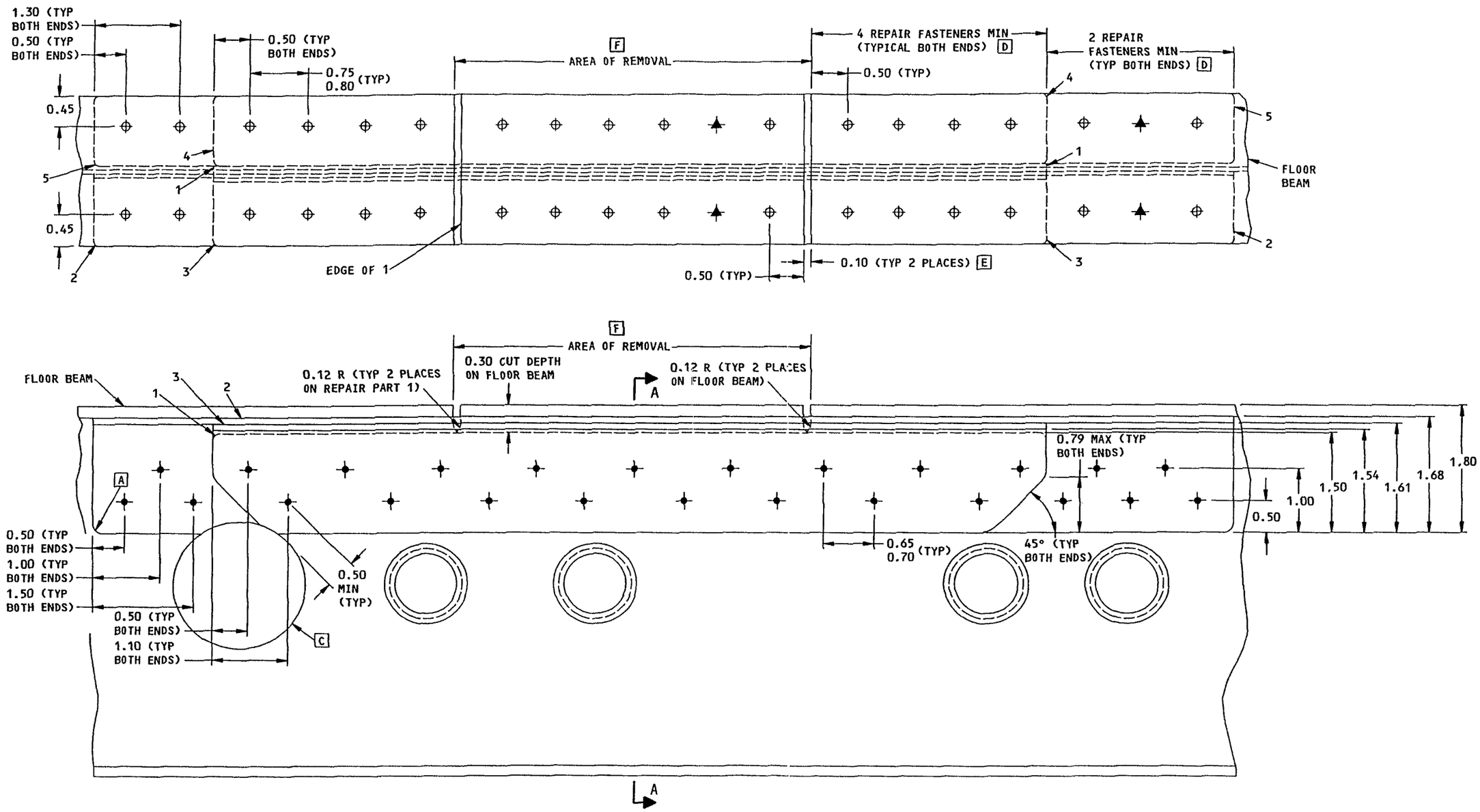

DETAIL I

Section 46 Floor Beam Upper Chord Repair
Figure 2 (Sheet 3)

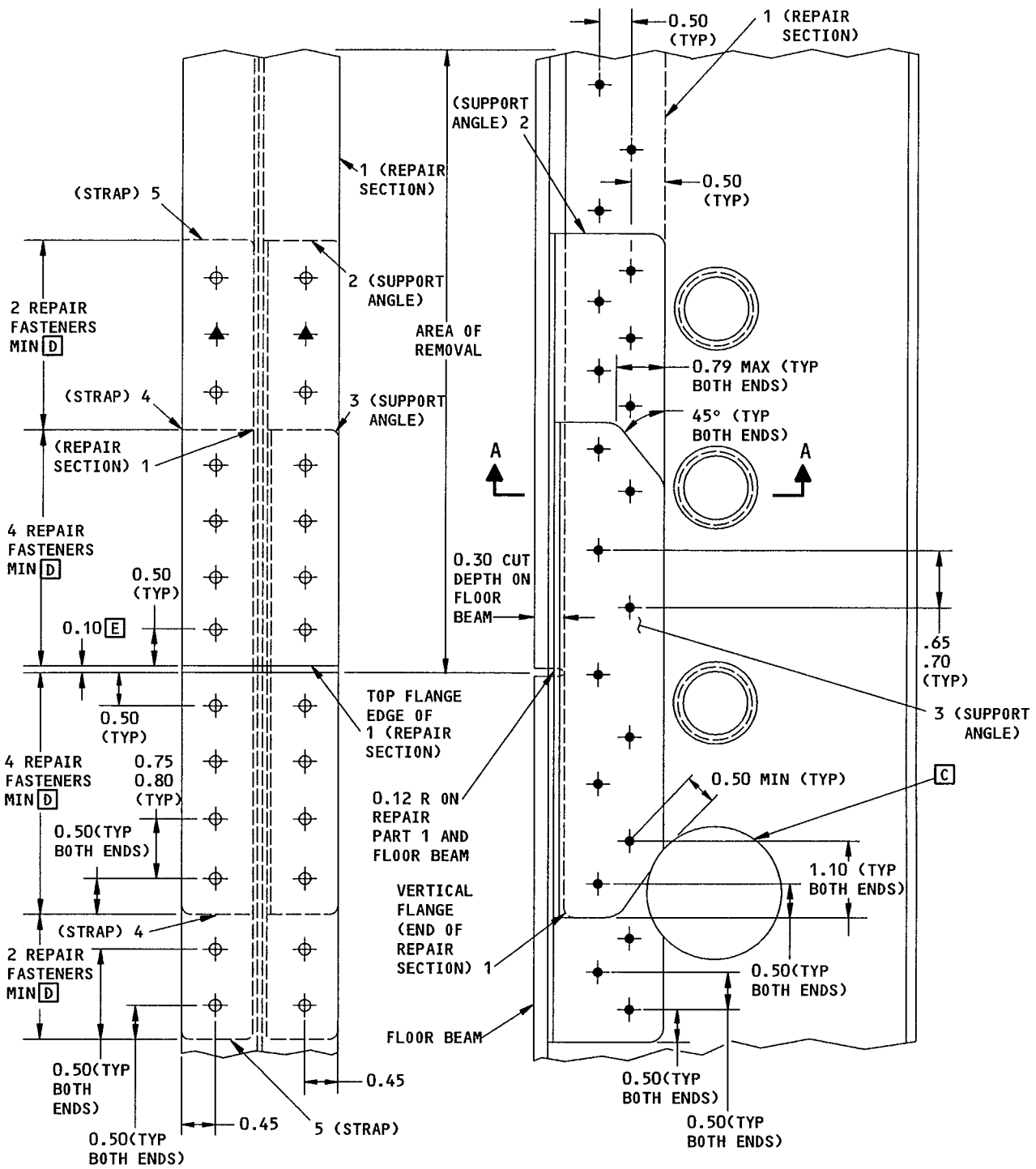

DETAIL II

END CONFIGURATION FOR LARGE REPAIR SECTIONS (TYPICAL)

Section 46 Floor Beam Upper Chord Repair
Figure 2 (Sheet 4)

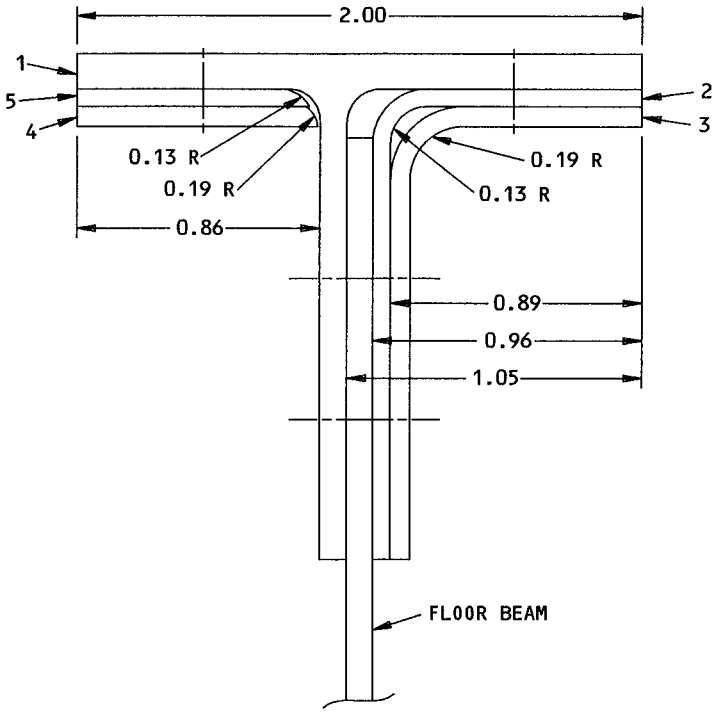

SECTION A-A

Section 46 Floor Beam Upper Chord Repair
Figure 2 (Sheet 5)

REPAIR INSTRUCTIONS

1. Remove the floor panels as necessary to get access to the damaged area.
2. Remove the adjacent structure as necessary to get access to the damaged area.
3. Remove and discard the radius fillers at the seat track attach locations.
4. Remove the splice tee.
5. Remove the fasteners that will go through the stiffener and repair parts 1,2, and 3.
6. Cut out the damaged area as shown in Detail I.
7. Make the repair parts. See Detail I for example.
8. Put the repair parts into position and drill the fastener holes as shown in Detail I. Fastener hole diameters at the floor panel fastener locations are to be 0.250 to 0.261.
9. Remove the repair parts.
10. Remove all of the nicks,scratches,gouges, and burrs from the repair parts and the cut edges of the floor beam.
11. Make a 0.015 to 0.030 radius on the sharp edges of the repair parts and the cut edges of the floor beam.
12. Clean the repair parts and the cut edges of the floor beam and apply Alodine. Refer to 51-10-2.
13. Apply a finish to the repair parts and the cut edges of the floor beam. Refer to 51-21 of the Maintenance Manual.
    A. Apply one coat of BMS 10-11, Type I primer.
    B. Apply one coat of BMS 10-11, Type II enamel, color 702 white gloss.
14. Install the repair parts.
    A. Make the faying surface seals with BMS 5-95 sealant.
    B. Install the fasteners wet with BMS 5-95 sealant.
15. Install the splice tee that was removed.
16. Apply post assembly touch up finish to the repair area. Refer to 51-21 of the Maintenance Manual.
    A. Apply one coat of BMS 10-11, Type I primer.
    B. Apply one coat of BMS 10-11, Type II enamel, color 702 white gloss.
17. Install the adjacent structure which was removed to get access to the damaged area.
18. Install the floor panels which were removed to get access to the damaged area. The following steps apply to all the holes common to the floor panel attachments.
    A. Clean the holes prior to applying Alodine. Refer to 51-10-2.
    B. Apply Alodine in the holes. Refer to 51-10-2.
    C. Apply one coat of BMS 10-11, Type 1 primer in the holes. Refer to 51-21 of the Maintenance Manual.
    D. Apply BMS 3-24 grease in all the holes prior to installing the nutplates.
    E. Install a nutplate at each hole.
    F. Install the floor panel fasteners wet with BMS 3-24 grease and torque to 20-25 in-lbs.

Section 46 Floor Beam Upper Chord Repair at Seat Track Location
Figure 3 (Sheet 1)

NOTES

- THIS REPAIR IS APPLICABLE ONLY TO DAMAGE (ON THE UPPER CHORD OF A BAC1518-399 EXTRUSION FLOOR BEAM) WHICH GOES UNDER A SEAT TRACK. IT IS ALSO APPLICABLE WHERE A SPLICE TEE GOES THROUGH THE FLOOR BEAM AND ATTACHES TO THE SEAT TRACK.
- THIS REPAIR WILL NOT HAVE AN EFFECT ON A STRUCTURALLY SIGNIFICANT ITEM (SSI) GIVEN IN SRM 51-00-4, FIG. 3. THUS, NO CHANGE TO THE SUPPLEMENTAL STRUCTURAL INSPECTION DOCUMENT (SSID) INSPECTION PROGRAM IS NECESSARY.
- WHEN YOU USE THIS REPAIR REFER TO:
  - AMM 51-21 FOR INTERIOR AND EXTERIOR FINISHES
  - SRM 51-10-1 FOR INVESTIGATION AND CLEANUP OF DAMAGE
  - SRM 51-10-2 FOR PROTECTIVE TREATMENT OF METAL
  - SRM 51-20-4 FOR SEALING OF REPAIRS
  - SRM 51-30 FOR FASTENER CODE, REMOVAL, INSTALLATION, HOLES SIZES AND EDGE MARGINS.

[A] THE EXTERNAL RADII ON THE REPAIR PARTS ARE TO BE 0.37 INCH R UNLESS DIFFERENTLY SPECIFIED.

[B] BEND THE REPAIR ANGLES IN THE ANNEALED CONDITION, THEN HEAT TREAT AS SPECIFIED.

[C] THE REPAIR PARTS MUST NOT CAUSE A BLOCKAGE OF ANY FLOOR BEAM HOLES. MAKE THE CUTOUTS IN THE REPAIR PARTS THE SAME SHAPE AS THE HOLES THEY MUST GO AROUND IN THE FLOOR BEAM.

[D] ADJUST THE REPAIR PART LENGTHS AND THE DISTANCE BETWEEN REPAIR FASTENERS TO INCLUDE THE FLOOR PANEL FASTENER ATTACH LOCATIONS.

[E] FILL THE GAP WITH BMS 5-95 SEALANT.

FASTENER SYMBOLS

- INITIAL FASTENER LOCATION. SAME TYPE AND SIZE FASTENER AS INITIAL FASTENER
- INITIAL FASTENER LOCATION. INSTALL A 1/64 OVERSIZE BACB30MY6K()X HI-LOK AND A BACC30M6 COLLAR. (OPTIONAL: BACB30VT6()X BOLT AND A BACC30BL COLLAR)
- REPAIR FASTENER LOCATION. INSTALL A BACB30FM6 BOLT AND A BACC30M6 COLLAR (OPTIONAL: BACB30VT6K() BOLT AND A BACC30BL COLLAR).
- FLOOR PANEL FASTENER LOCATION. INSTALL A BACN10JR() NUTPLATE AND THE SAME TYPE AND SIZE FLOOR PANEL FASTENER AS THE ONE THAT WAS REMOVED
- REPAIR FASTENER LOCATION. INSTALL A BACB30FN6 BOLT AND A BACC30M6 COLLAR (OPTIONAL: BACB30VU6K() BOLT AND A BACC30BL COLLAR).

REPAIR MATERIAL			
PART		QTY	MATERIAL
1	REPAIR SECTION	1	BAC1505-100617 7075-T73
2	SUPPORT ANGLE	1	0.063 INCH THICK CLAD 7075-0 [B] HT TR TO -T6 (BAC1490-2738 7075-T6, OPT)
3	SUPPORT ANGLE	1	0.071 INCH THICK CLAD 7075-0 [B] HT TR TO -T6 (BAC1490-2865 7075-T6, OPT)
4	STRAP	1	0.071 INCH THICK CLAD 7075-T6
5	STRAP	1	0.063 INCH THICK CLAD 7075-T6
6	FILLER	1	0.19 INCH THICK 7075-T6 (BAC1512-485 7075-T6, OPT)

Section 46 Floor Beam Upper Chord Repair at Seat Track Location
Figure 3 (Sheet 2)

BOEING PROPRIETARY - Copyright © - Unpublished Work - See title page for details.

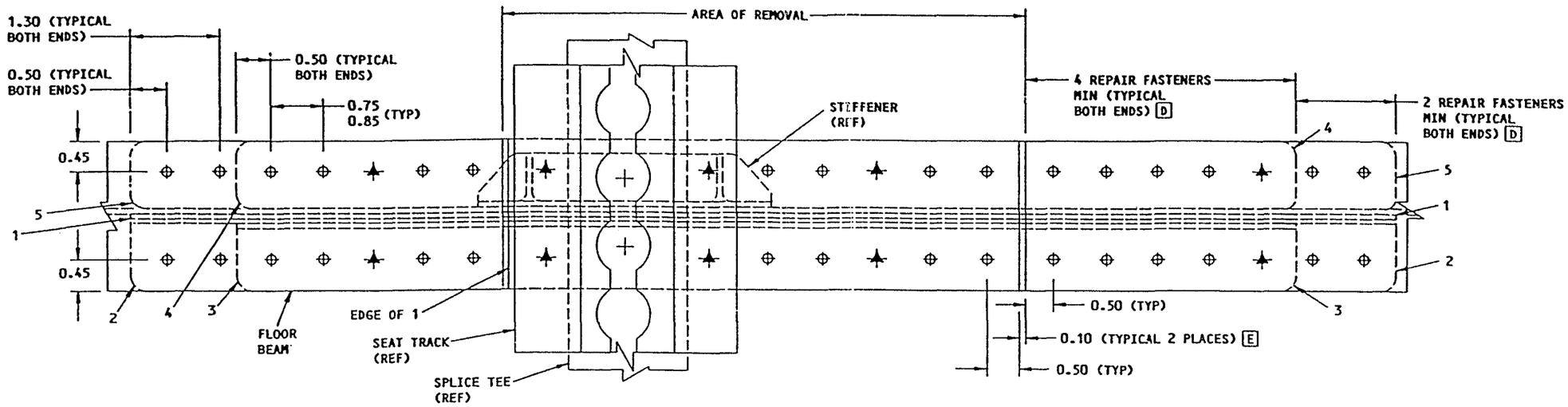

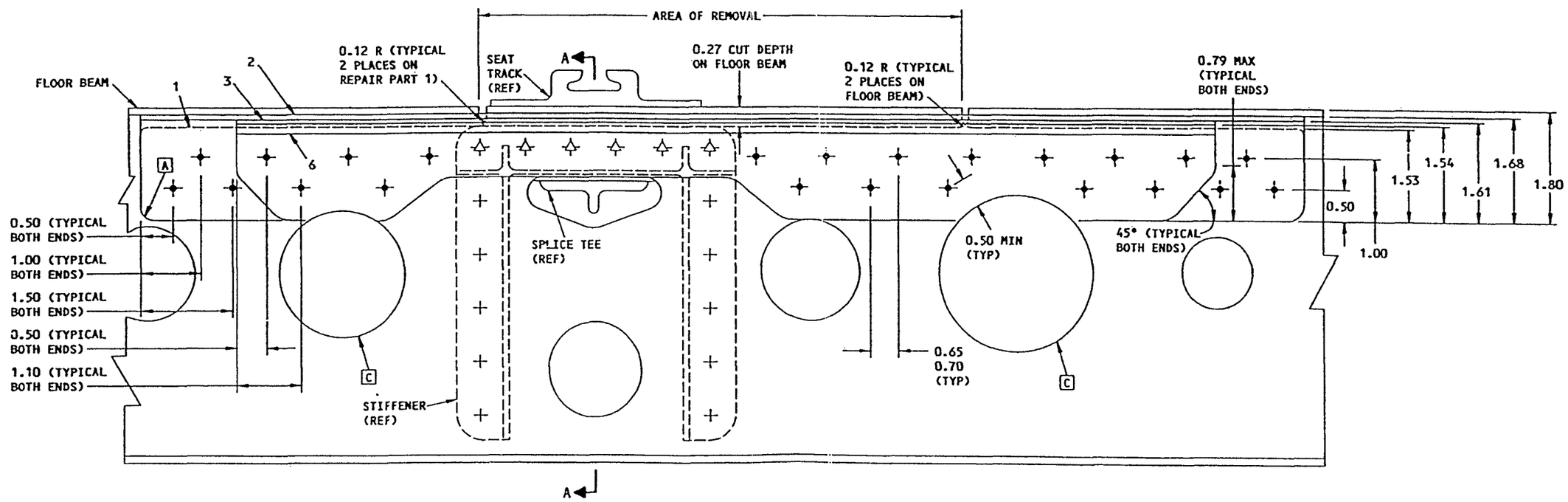

DETAIL X

Section 46 Floor Beam Upper Chord Repair at Seat Track Location
Figure 3 (Sheet 3)

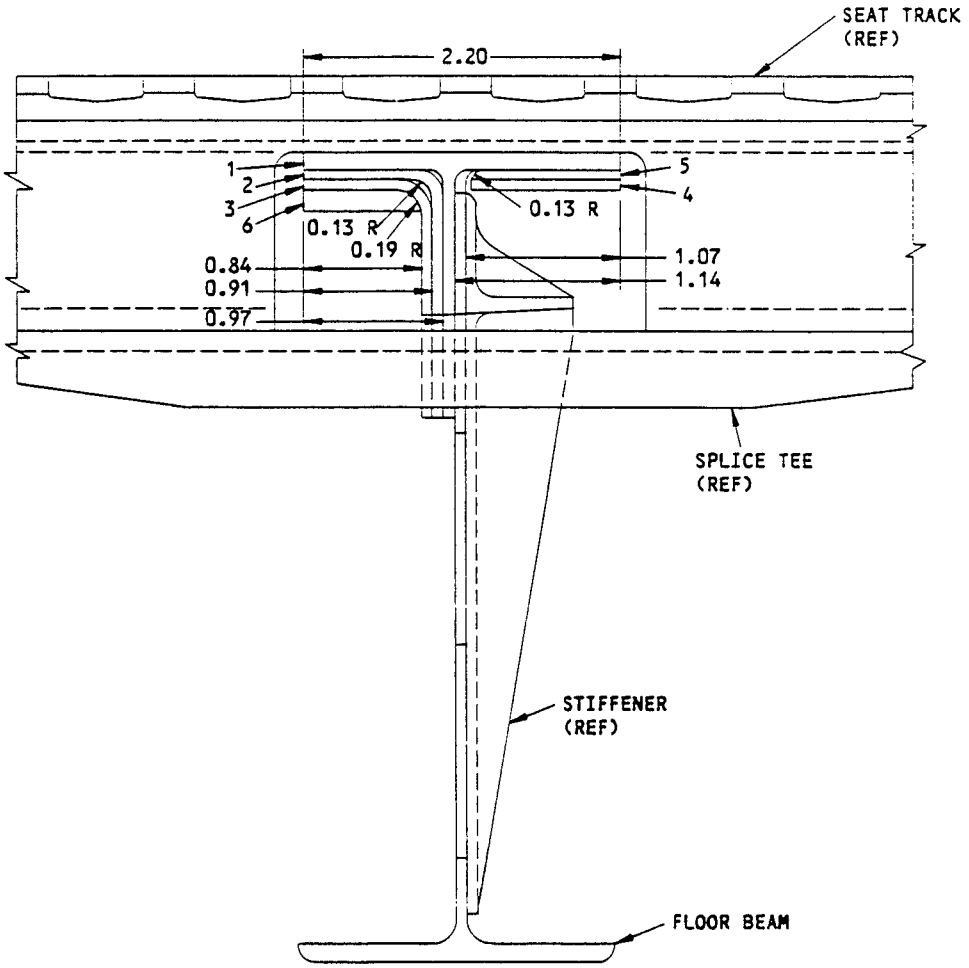

SECTION A-A

Section 46 Floor Beam Upper Chord Repair at Seat Track Location
Figure 3 (Sheet 4)

REPAIR INSTRUCTIONS

1. Remove the fasteners in the repair area that attach the stabilizer strap to the floor beam.
2. Drill a 0.25 inch diameter stop hole in the strap at the ends of the crack. Refer to SRM 51-10-1.
3. Make the repair plate. See Table I. See Detail I for a repair near the end of a stabilizer strap. See Detail II for a repair at floor beam locations between the ends of a stabilizer strap.
4. Put the repair plate on the stabilizer strap and drill the fastener holes.
5. Remove the repair plate.
6. Remove all nicks, scratches, burrs, sharp edges and corners from the stabilizer strap and the repair plate.
7. Apply a chemical conversion coating to the repair plate and to the bare edges of the crack in the stabilizer strap. Refer to SRM 51-10-2.
8. Apply one layer of BMS 10-11, Type I primer to the repair plate and the bare edges of the stabilizer strap. Refer to AMM 51-21.
9. Apply one layer of BMS 10-11, Type II enamel to the primed repair plate and the primed edges of the stabilizer strap. Refer to AMM 51-21.
10. Install the repair plate. Make a faying surface seal with BMS 5-95 sealant. Refer to SRM 51-10-2. Install the fasteners.

NOTES

- THIS REPAIR WILL NOT HAVE AN EFFECT ON A STRUCTURALLY SIGNIFICANT ITEM (SSI) GIVEN IN SRM 51-00-4, FIG. 3. THUS, NO CHANGE TO THE SUPPLEMENTAL STRUCTURAL INSPECTION DOCUMENT (SSID) INSPECTION PROGRAM IS NECESSARY.
- WHEN YOU USE THIS REPAIR, REFER TO:
  - AMM 51-20 FOR PROTECTIVE FINISHES, CLEANING AND PAINTING
  - SRM 51-10-1 FOR DAMAGE CLASSIFICATION
  - SRM 51-10-2 FOR PROTECTIVE TREATMENT OF METAL
  - SRM 51-20-4 FOR REPAIR SEALING
  - SRM 51-30 FOR FASTENER CODES, REMOVAL AND INSTALLATION, HOLE SIZES, AND EDGE MARGINS.

FASTENER SYMBOLS

REFERENCE FASTENER LOCATION

INITIAL FASTENER LOCATION. INSTALL AN MS20470D6 RIVET.

REPAIR FASTENER LOCATION. INSTALL A MS20470D6 RIVET.

REPAIR MATERIAL			
PART		QTY	MATERIAL
1	REPAIR PLATE	1	0.040 INCH THICK CLAD 7075-76

TABLE I

Section 41 Floor Structure Stabilizer Strap Crack Repair
Figure 4 (Sheet 1)

BOEING PROPRIETARY - Copyright © - Unpublished Work - See title page for details.

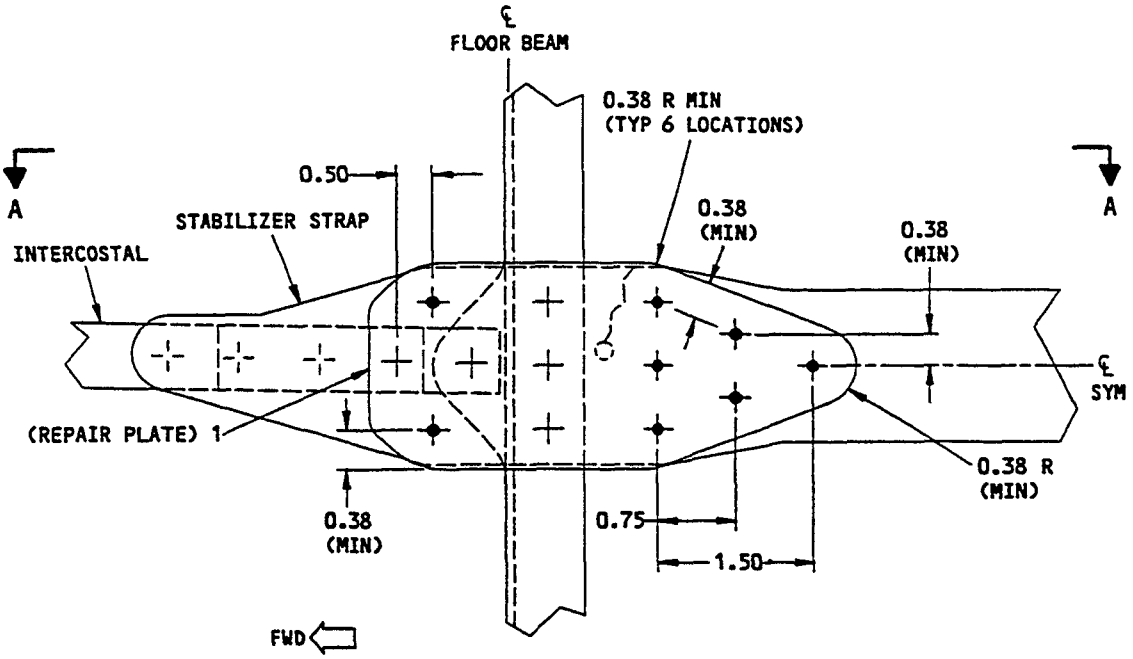

VIEW LOOKING UP

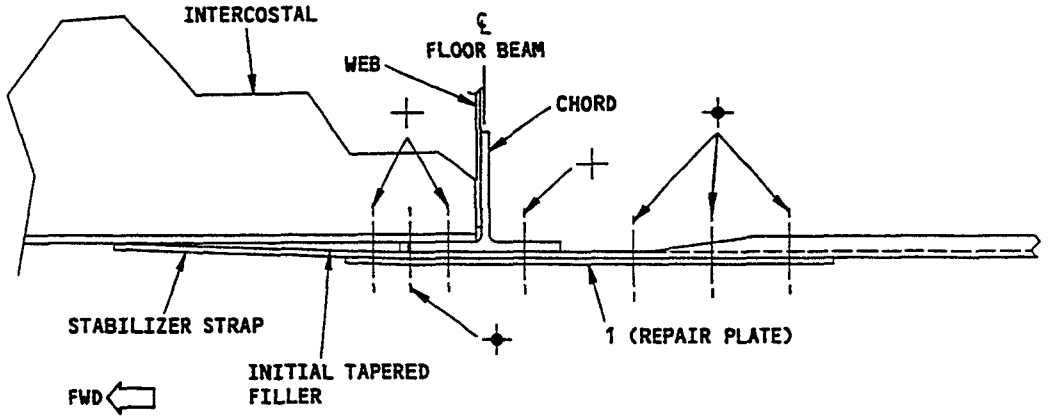

SECTION A-A

DETAIL I

Section 41 Floor Structure Stabilizer Strap Crack Repair
Figure 4 (Sheet 2)

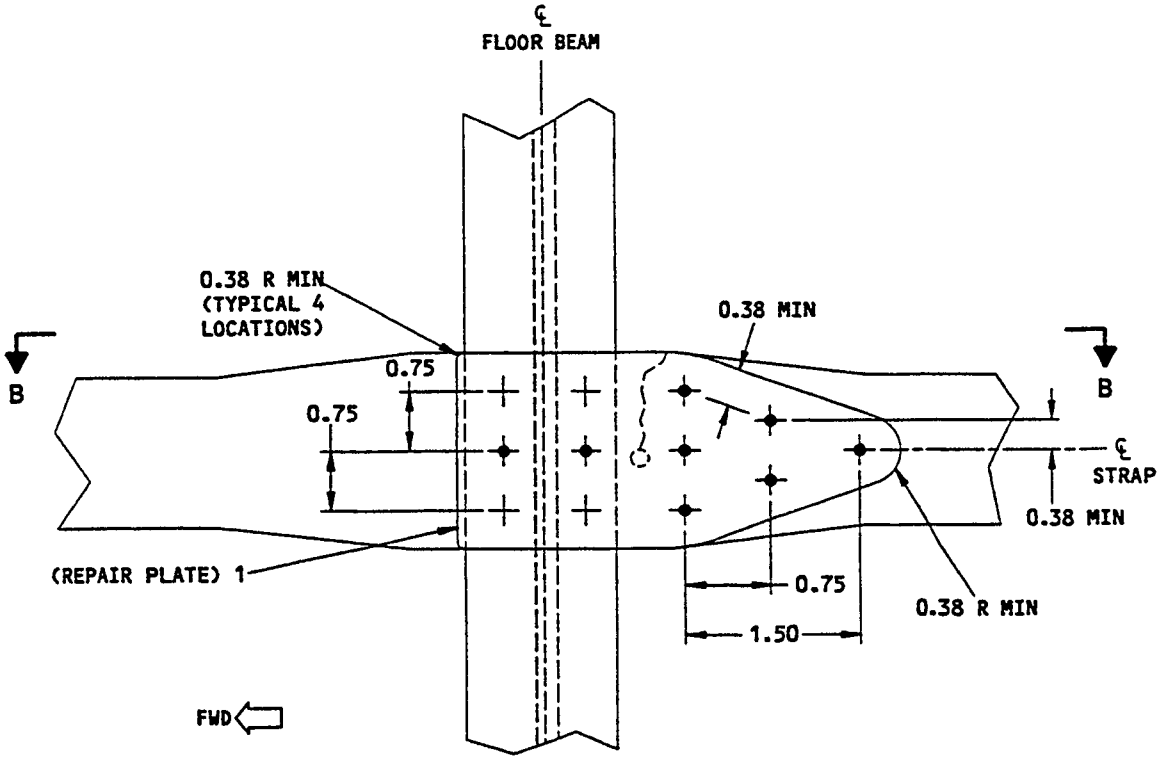

VIEW LOOKING UP

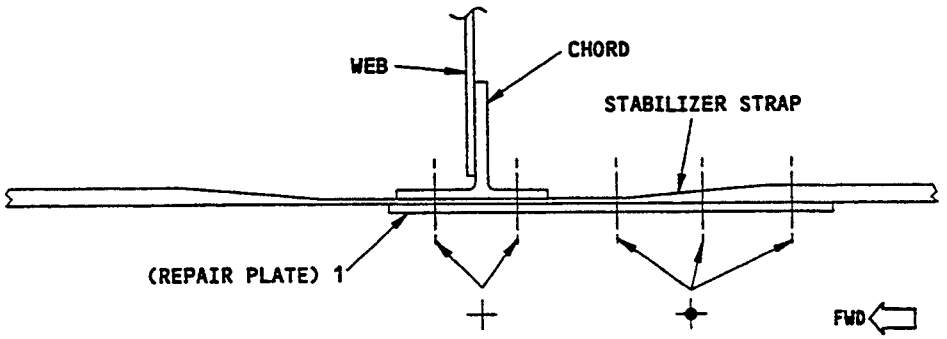

SECTION B-B

DETAIL II

Section 41 Floor Structure Stabilizer Strap Crack Repair
Figure 4 (Sheet 3)

APPLICABILITY

THIS REPAIR IS APPLICABLE TO DAMAGE ON THE UPPER CHORD OF FLOOR BEAMS MADE OF THESE EXTRUSIONS:

AND10136-2401 OR -2404
BAC1503-10281
BAC1505-100186 OR -100246

THE REPAIR IS NOT APPLICABLE TO DAMAGE AT A SEAT TRACK.

REPAIR INSTRUCTIONS

1. Remove the floor panels as necessary to get access to the damaged area.
2. Remove the adjacent structure as necessary to get access to the damaged area.
3. Remove the web stiffeners that are in the repair area.
4. Cut out the damaged area as shown in Detail I [A]. The edge of the cut must not be less than 2 inches from:
   - The center of a seat track
   - The center of a cargo tie down fitting.
5. Make the repair parts. See Table II and Detail I [B].
6. Assemble the repair parts and drill the fastener holes. Install hex drive bolts in transition fit holes. For floor panel fasteners, drill the holes 0.250 to 0.261 inch in diameter.
7. Disassemble the repair parts.
8. Remove the nicks, scratches, gouges, burrs, and sharp edges from the repair parts and the cut edges of the floor beam.
9. Apply a chemical conversion coating to the repair parts and the cut edges of the floor beam. Refer to SRM 51-10-2.
10. Apply a finish to the repair parts and to the bare surfaces of the floor beam. Refer to SOPM 20-41-02.
    A. Apply one layer of BMS 10-11, Type I primer.
       Apply one layer of BMS 10-11, Type II enamel, color 702 white gloss.
11. Install the repair parts and the web stiffeners that were removed.
    A. Install the repair parts with BMS 5-95 sealant between the mating surfaces. Install a part 4 shim as necessary under a stiffener which overlaps a part 2 angle.
    B. Install the fasteners. Install the hex drive fasteners wet with BMS 5-95 sealant in transition fit holes.
12. Install the adjacent structure which was removed to get access to the damaged area.
13. Install the floor panels which were removed to get access to the damaged area. The steps that follow apply to all of the holes for the floor panel attachments.
    A. Apply a chemical conversion coating to the holes. Refer to SRM 51-10-2
    B. Apply one layer of BMS 10-11, Type I primer to the holes. Refer to SOPM 20-41-02.
    C. Apply MIL-C-11796, Class 3 grease to the holes.
    D. Install a clip-on nut at each hole.
    E. Install the floor panel fasteners wet with MIL-C-11796, Class 3 grease and torque to 20-35 in-lbs.

NOTES

- THIS REPAIR WILL NOT HAVE AN EFFECT ON A STRUCTURALLY SIGNIFICANT ITEM (SSI) GIVEN IN SRM 51-00-4, FIG. 3. THUS, NO CHANGE TO THE SUPPLEMENTAL STRUCTURAL INSPECTION DOCUMENT (SSID) INSPECTION PROGRAM IS NECESSARY.
- ALL DIMENSIONS ARE IN INCHES, UNLESS GIVEN DIFFERENTLY.
- EDGE MARGINS MUST BE A MINIMUM OF 2D, UNLESS GIVEN DIFFERENTLY.
- D = THE DIAMETER OF THE FASTENER
- MAKE THE EXTERNAL RADII ON THE REPAIR PARTS 0.38 R UNLESS GIVEN DIFFERENTLY.
- USE SHIMS, FILLERS OR TAPERED FILLERS SO THAT A CLEARANCE BETWEEN PARTS IS NOT LARGER THAN 0.010 INCH BEFORE FASTENER INSTALLATION.
- WHEN YOU USE THIS REPAIR REFER TO:
  - SOPM 20-41-02 FOR THE APPLICATION OF CORROSION RESISTANT PRIMER
  - SRM 51-10-1 FOR DAMAGE CLASSIFICATION
  - SRM 51-10-2 FOR PROTECTIVE TREATMENT OF METALLIC AND GRAPHITE MATERIALS
  - SRM 51-20-4 FOR REPAIR SEALING
  - SRM 51-30 FOR FASTENER CODE, REMOVAL, INSTALLATION, HOLE SIZES AND EDGE MARGINS.

[A] IF A FLOOR BEAM FLANGE IS TAPERED, AND EDGE MARGIN OF 2D MUST BE KEPT. IF YOU CANNOT KEEP THIS EDGE MARGIN, THEN CUT THE FLOOR BEAM IN AN AREA THAT IS NOT TAPERED.

[B] IF THE FLOOR BEAM CHORD HAS NO FORWARD OR AFT FLANGE, MAKE AND INSTALL THE REPAIR PARTS FOR THE FLANGE THAT IS.

[C] BEND THE REPAIR ANGLES IN THE ANNEALED CONDITION, THEN HEAT TREAT AS SPECIFIED. THE MINIMUM DESIGN BEND RADII FOR 0.063 INCH THICK 7075-0 TEMPER IS 0.12 INCH.

Section 41 Floor Beam Upper Chord Repair
Figure 5 (Sheet 1)

BOEING PROPRIETARY - Copyright © - Unpublished Work - See title page for details.

NOTES (CONTINUED)

[D] THERE MUST BE A MINIMUM OF FOUR REPAIR FASTENERS THROUGH THE HORIZONTAL FLANGE OF THE PART 3 ANGLES. THIS IS NECESSARY INBOARD AND OUTBOARD OF THE FLOOR CHORD SPLICE.

[E] THERE MUST BE A MINIMUM OF TWO REPAIR FASTENERS THROUGH THE ENDS OF EACH FLANGE OF THE PART 2 ANGLE.

[F] IF THE REPAIR INCLUDES A FLOOR PANEL FASTENER, ADJUST THE DISTANCE BETWEEN THE REPAIR FASTENERS AND THE LENGTH OF THE REPAIR PART.

[G] THERE MUST BE A MINIMUM OF THREE REPAIR FASTENERS THROUGH THE VERTICAL FLANGE OF THE PART 3 ANGLES. THIS IS NECESSARY INBOARD AND OUTBOARD OF THE FLOOR CHORD SPLICE.

[H] THE EDGE MARGIN FOR THE VERTICAL FLANGE OF THE PARTS 2 AND 3 ANGLES MUST BE A MINIMUM OF 0.40 INCH.

[I] FILL THE SPACE BETWEEN PARTS WITH BMS 5-95 SEALANT.

[J] IT IS POSSIBLE THAT THE SPLICE LENGTH WILL NOT PERMIT THE NECESSARY NUMBER OF ATTACHMENTS BETWEEN THE CUTS. IF THIS OCCURS, MAKE EACH REPAIR ANGLE ONE CONTINUOUS ANGLE.

[K] IF THE INITIAL UPPER CHORD IS MADE FROM A 7050-T76511 EXTRUSION, YOU CAN USE A 7075-T6511 EXTRUSION AS AN ALTERNATIVE.

FASTENER SYMBOLS

REFERENCE FASTENER LOCATION

FLOOR PANEL FASTENER LOCATION. INSTALL A BACN10YD()G CLIP-ON NUT AND THE SAME TYPE AND SIZE OF FLOOR PANEL FASTENER AS THE ONE THAT WAS REMOVED. AS AN ALTERNATIVE, INSTALL A BACN10FX() CLIP-ON NUT.

REPAIR FASTENER LOCATION. INSTALL A BACB30NW6K HEX DRIVE BOLT WITH A BACC30M6 COLLAR. AS AN ALTERNATIVE, INSTALL A BACB30FN6 HEX DRIVE BOLT WITH A BACC30M6 COLLAR.

INITIAL FASTENER LOCATION. INSTALL A FASTENER AS GIVEN IN TABLE I. USE THE DIAMETER NECESSARY TO KEEP TRANSITION FIT HOLES.

REPAIR FASTENERS			
INITIAL FASTENER	DIA (IN.)	REPAIR FASTENER	REPAIR FASTENER (FOR HOLE CLEANUP, 1/32 INCH MAX OVERSIZE)
PROTRD'G HEAT RIVET	5/32	BACB30MY6K() WITH A BACC30M COLLAR (PREFERRED) OR BACB30FM6 WITH A BACC30M COLLAR (ALTERNATIVE)	BACB30MY6K()X WITH A BACC30M COLLAR (PREFERRED) OR BACB30FP6 WITH A BACC30M COLLAR (ALTERNATIVE)
	3/16	BACB30MY6K()X WITH A BACC30M COLLAR (PREFERRED) OR BACB30FP6 WITH A BACC30M COLLAR (ALTERNATIVE)	BACB30MY6K()Y WITH A BACC30R COLLAR (PREFERRED) OR BACB30KK6 WITH A BACC30R COLLAR (ALTERNATIVE)
HEX DRIVE BOLT OR LOCKBOLT	3/16	BACB30MY6K()X WITH A BACC30M COLLAR (PREFERRED) OR BACB30FP6() WITH A BACC30M COLLAR (ALTERNATIVE)	BACB30MY6K()Y WITH A BACC30R COLLAR (PREFERRED) OR BACB30KK6() WITH A BACC30R COLLAR (ALTERNATIVE)

TABLE I

REPAIR MATERIAL			
PART		QTY	MATERIAL
1	CHORD	1	USE THE SAME MATERIAL, DIMENSIONS AND HEAT TREAT AS THE INITIAL FLOOR CHORD [K]
2	ANGLE	4	0.063 CLAD 7075-O HT TR TO - T6 [C]
3	ANGLE	4	0.063 CLAD 7075-O HT TR TO - T6 [C]
4	SHIM (NOT TAPERED)	AS REQ'D	THICKNESS AS REQ'D USE 2024-T3 OR 7075-T6

TABLE II

Section 41 Floor Beam Upper Chord Repair
Figure 5 (Sheet 2)

E74251

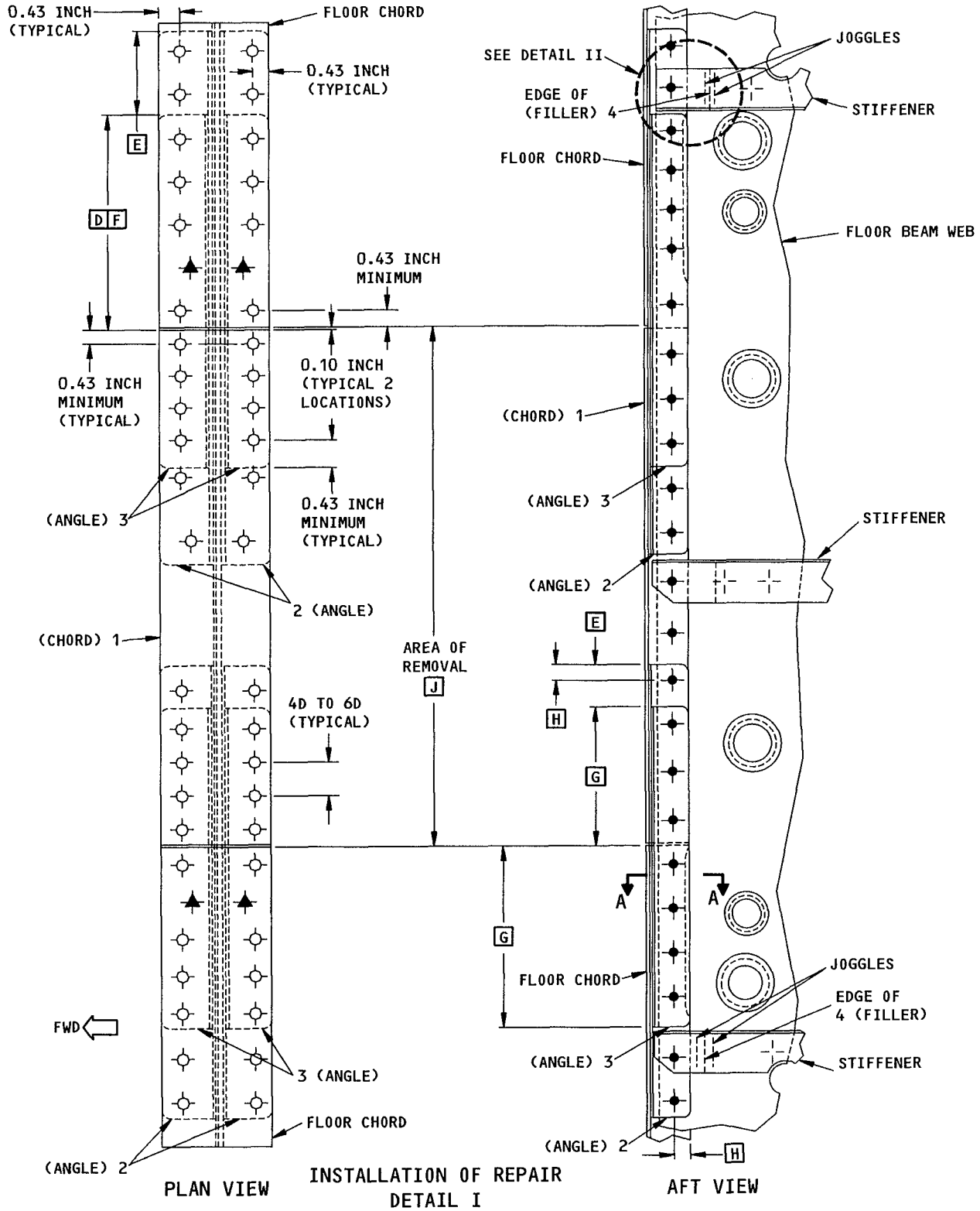

INSTALLATION OF REPAIR
DETAIL I

Section 41 Floor Beam Upper Chord Repair
Figure 5 (Sheet 3)

E74252

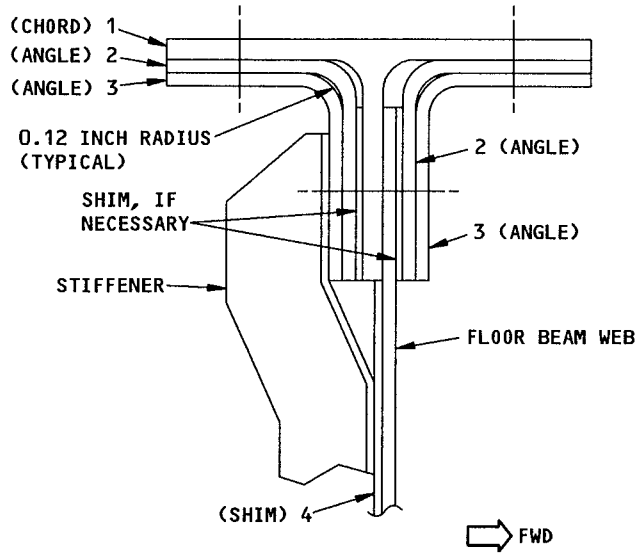

SECTION A-A

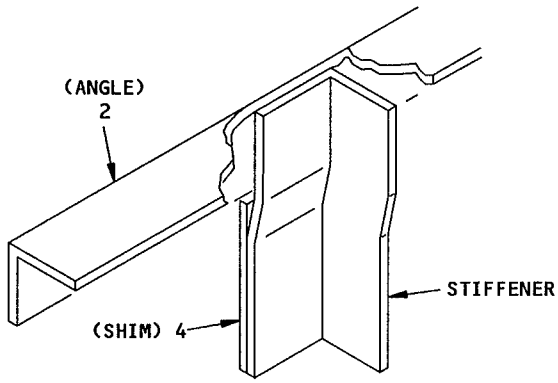

TYPICAL CUTOUT OF A STIFFENER

DETAIL II

Section 41 Floor Beam Upper Chord Repair
Figure 5 (Sheet 4)

APPLICABILITY

THIS REPAIR IS APPLICABLE TO DAMAGE ON ONE FLANGE OF THE UPPER CHORD OF THE TRANSVERSE FLOOR BEAMS MADE FROM THE EXTRUSIONS THAT FOLLOW:

AND10136-2401
BAC1505-100186 OR -100246

THE REPAIR IS NOT APPLICABLE TO DAMAGE AT A SEAT TRACK.

REPAIR INSTRUCTIONS

1. Remove the floor panels as necessary to get access to the damaged area.
2. Remove the adjacent structure as necessary to get access to the damaged area.
3. Remove the web stiffeners in the repair area if necessary.
4. Cut out the damaged area of the chord as shown in Detail I [A]. The edge of the cut must not be less than 2 inches from:
   - The center of a seat track
   - The center of a cargo tie down fitting.
5. Make the repair parts.
6. Assemble the repair parts and drill the fastener holes. Install hex drive bolts in transition fit holes. For floor panel fasteners, drill the holes 0.250 to 0.261 inch in diameter.
7. Disassemble the repair parts.
8. Remove the nicks, scratches, gouges, burrs, and sharp edges from the repair parts and the cut edges of the floor beam.
9. Apply a chemical conversion coating to the repair parts and the cut edges of the floor beam. Refer to SRM 51-10-2.
10. Apply a finish to the repair parts and to the bare surfaces of the floor beam. Refer to SOPM 20-41-02.
    A. Apply two layers of BMS 10-11, Type I primer.
    B. Apply one layer of BMS 10-11, Type II enamel, color 702 white gloss (optional).
11. Install the repair parts and the web stiffeners that were removed.
    A. Install the repair parts with BMS 5-95 sealant between the mating surfaces. Install a part 4 shim if necessary under the stiffener which lays over the part 2 angle.
    B. Install the fasteners. Install the hex drive fasteners wet with BMS 5-95 sealant in transition fit holes.
12. Install the adjacent structure which was removed to get access to the damaged area.
13. Install the floor panels which were removed to get access to the damaged area. The steps that follow apply to all of the holes for the floor panel attachments.
    A. Apply a chemical conversion coating to the holes. Refer to SRM 51-10-2
    B. Apply one layer of BMS 10-11, Type I primer to the holes. Refer to SOPM 20-41-02.
    C. Apply MIL-C-11796, Class 3 grease to the holes.
    D. Install a nut plate at each hole.
    E. Install the floor panel fasteners with MIL-C-11796, Class 3 grease and torque to 20-35 in-lbs.

NOTES

- THIS REPAIR WILL NOT HAVE AN EFFECT ON A STRUCTURALLY SIGNIFICANT ITEM (SSI) GIVEN IN SRM 51-00-4, FIG. 3. THUS, NO CHANGE TO THE SUPPLEMENTAL STRUCTURAL INSPECTION DOCUMENT (SSID) INSPECTION PROGRAM IS NECESSARY.
- ALL DIMENSIONS ARE IN INCHES, UNLESS GIVEN DIFFERENTLY.
- D = THE DIAMETER OF THE FASTENER
- EDGE MARGINS MUST BE A MINIMUM OF 1.7 D, UNLESS GIVEN DIFFERENTLY.
- MAKE THE EXTERNAL RADII ON THE EXTERNAL PARTS 0.38 INCH R UNLESS GIVEN DIFFERENTLY.
- USE SHIMS, FILLERS OR TAPERED FILLERS SO THAT A CLEARANCE BETWEEN PARTS IS NOT LARGER THAN 0.010 INCH BEFORE INSTALLATION OF THE FASTENER.
- WHEN YOU USE THIS REPAIR REFER TO:
  - SOPM 20-41-02 FOR APPLICATION OF FINISHES
  - SRM 51-10-1 FOR DAMAGE CLASSIFICATION
  - SRM 51-10-2 FOR PROTECTIVE TREATMENT OF METALLIC MATERIALS
  - SRM 51-20-4 FOR REPAIR SEALING
  - SRM 51-30 FOR FASTENER CODE, INSTALLATION AND REMOVAL, HOLE SIZES, AND EDGE MARGINS.

Section 41 Repair To One Flange of the Floor Beam Upper Chord
Figure 6 (Sheet 1)

BOEING PROPRIETARY - Copyright © - Unpublished Work - See title page for details.

NOTES (CONTINUED)

[A] IF A FLOOR BEAM FLANGE WIDTH IS TAPERED, AN EDGE MARGIN OF 1.7D MUST BE KEPT. IF YOU CANNOT KEEP THIS EDGE MARGIN, THEN CUT THE FLOOR BEAM IN AN AREA THAT IS NOT TAPERED.

[B] BEND THE REPAIR ANGLES IN THE ANNEALED CONDITION, THEN HEAT TREAT AS SPECIFIED. THE BEND RADII ARE SHOWN IN SECTION A-A OF DETAIL I. OPTIONAL: MAKE FROM BAC 1490-2734 FORMED ANGLES, 7075-T6.

[C] THERE MUST BE A MINIMUM OF FOUR REPAIR FASTENERS THROUGH THE HORIZONTAL FLANGE OF THE PART 3 ANGLE (THIS DOES NOT INCLUDE FLOOR PANEL OR CARGO LINER FASTENERS). THIS IS NECESSARY INBOARD AND OUTBOARD OF THE FLOOR CHORD SPLICE.

[D] THERE MUST BE A MINIMUM OF TWO REPAIR FASTENERS THROUGH THE ENDS OF EACH FLANGE OF THE PART 2 ANGLE.

[E] ADJUST THE DISTANCE BETWEEN THE REPAIR FASTENERS AND THE LENGTH OF THE REPAIR PART IF THE REPAIR INCLUDES A FLOOR PANEL FASTENER.

[F] THERE MUST BE A MINIMUM OF FOUR REPAIR FASTENERS THROUGH THE VERTICAL FLANGE OF THE PART 3 ANGLES. THIS IS NECESSARY INBOARD AND OUTBOARD OF THE FLOOR CHORD SPLICE.

[G] THE EDGE MARGIN FOR THE VERTICAL FLANGE OF THE PARTS 2 AND 3 ANGLES MUST BE A MINIMUM OF 0.40 INCH.

[H] FILL THE SPACE BETWEEN PARTS WITH BMS 5-95 SEALANT.

[I] THIS REPAIR IS APPLICABLE TO THE FORWARD OR AFT SIDE OF THE FLOOR BEAM UPPER CHORD.

[J] THE REPAIR PARTS MUST NOT CAUSE A BLOCKAGE OF ANY FLOOR BEAM HOLES. MAKE THE CUTOUTS IN THE REPAIR PARTS THE SAME SHAPE AS THE HOLES THEY MUST ALIGN WITH IN THE FLOOR BEAM WEB.

[K] IF A LENGTH OF THE FULL CHORD WIDTH IS DAMAGED, REFER TO FIGURE 5 FOR REPAIR.

FASTENER SYMBOLS

REFERENCE FASTENER LOCATION

FLOOR PANEL OR CARGO LINER FASTENER LOCATION. INSTALLL A BACN10JR3CFD NUTPLATE WITH TWO BACRA5BA3D5 RIVETS OR TWO BACR15DR3 BLIND RIVETS AND THE SAME TYPE AND SIZE OF FLOOR PANEL FASTENER AS THE ONE THAT WAS REMOVED.

INITIAL FASTENER LOCATION. INSTALL A FASTENER AS GIVEN IN TABLE I. USE THE DIAMETER NECESSARY TO KEEP TRANSITION FIT HOLES.

REPAIR FASTENER LOCATION. INSTALL A BACB30NW6K (PREFERRED) OR A BACB30FN6 (ALTERNATIVE) HEX DRIVE BOLT WITH A BACC30BL COLLAR.

Section 41 Repair To One Flange of the Floor Beam Upper Chord
Figure 6 (Sheet 2)

REPAIR FASTENERS		
INITIAL FASTENER	REPAIR FASTENER TYPE	REPAIR FASTENER (FOR HOLE CLEANUP, 1/32 INCH MAX OVERSIZE)
PROTRUDING HEAD RIVET 5/32 DIA.	BACB30MY6K() WITH A BACC30M COLLAR (PREFERRED) OR BACB30FM6 WITH A BACC30M COLLAR (ALTERNATIVE)	BACB30MY6K()X WITH A BACC30M COLLAR (PREFERRED) OR BACB30FP6 WITH A BACC30M COLLAR (ALTERNATIVE)
PROTRUDING HEAD RIVET 3/16 DIA.	BACB30MY6K()X WITH A BACC30M COLLAR (PREFERRED) OR BACB30FP6() WITH A BACC30M COLLAR (ALTERNATIVE)	BACB30MY6K()Y WITH A BACC30R COLLAR (PREFERRED) OR BACB30KK6 WITH A BACC30R COLLAR (ALTERNATIVE)
PROTRUDING HEAD RIVET 1/4 DIA.	BACB30MY8K()X WITH A BACC30M COLLAR (PREFERRED) OR BACB30FP8 WITH A BACC30M COLLAR (ALTERNATIVE)	BACB30MY8K()Y WITH A BACC30R COLLAR (PREFERRED) OR BACB30KK8 WITH A BACC30R COLLAR (ALTERNATIVE)
HEX DRIVE BOLT OR LOCKBOLT 3/16 DIA.	BACB30MY6K()X WITH A BACC30M COLLAR (PREFERRED) OR BACB30FP6() WITH A BACC30M COLLAR (ALTERNATIVE)	BACB30MY6K()Y WITH A BACC30R COLLAR (PREFERRED) OR BACB30KK6() WITH A BACC30R COLLAR (ALTERNATIVE)

TABLE I

REPAIR MATERIAL			
PART		QTY	MATERIAL
1	FILLER	1	USE THE SAME THICKNESS AS THE INITIAL FLOOR CHORD. USE 7075-T6.
2	ANGLE	1	0.063 CLAD 7075-0 [B] HT TR TO -T6
3	ANGLE	1	0.063 CLAD 7075-0 [B] HT TR TO -T6
4	SHIM (NOT TAPERED)	AS REQ'D	THICKNESS AS REQ'D. USE 2024-T3 OR 7075-T6

TABLE II

Section 41 Repair To One Flange of the Floor Beam Upper Chord
Figure 6 (Sheet 3)

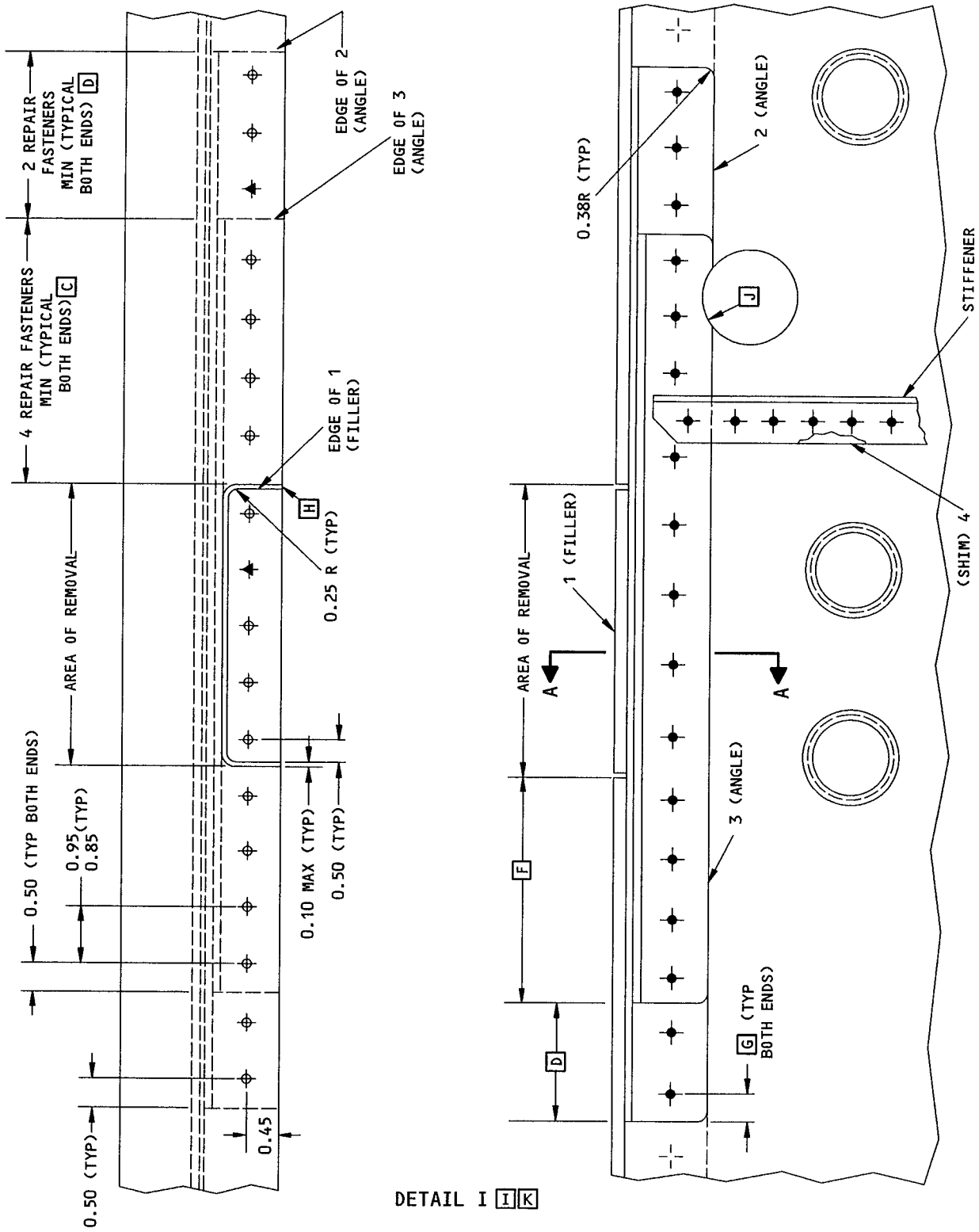

Section 41 Repair To One Flange of the Floor Beam Upper Chord
Figure 6 (Sheet 4)

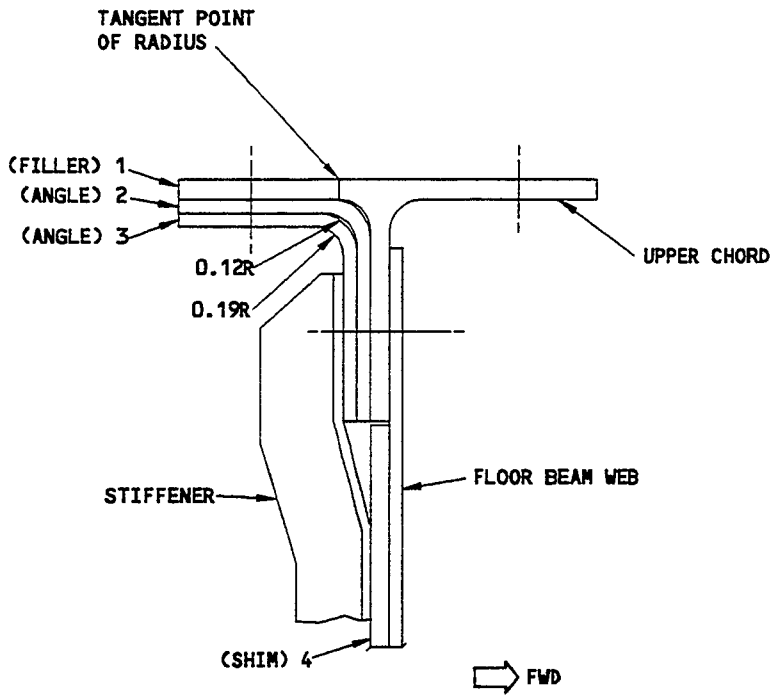

SECTION A-A

Section 41 Repair To One Flange of the Floor Beam Upper Chord
Figure 6 (Sheet 5)

E74421

APPLICABILITY

THIS REPAIR IS APPLICABLE TO DAMAGE ON ONE FLANGE OF THE UPPER OR LOWER CHORD OF THE FLOOR BEAMS MADE FROM BAC1518-338 OR BAC1518-399 EXTRUSIONS.

THE REPAIR IS NOT APPLICABLE TO DAMAGE AT A SEAT TRACK.

REPAIR INSTRUCTIONS

1. Remove the floor panels as necessary to get access to the damaged area.
2. Remove the adjacent structure as necessary to get access to the damaged area.
3. Remove the web stiffeners in the repair area if necessary.
4. Cut out the damaged area of the chord as shown in Detail I [A]. The edge of the cut must not be less than 2 inches from:
   - The center of a seat track
   - The center of a cargo tie down fitting.
5. Make the repair parts.
6. Assemble the repair parts and drill the fastener holes. Install hex drive bolts in transition fit holes. For floor panel fasteners, drill the holes 0.250 to 0.261 inch in diameter.
7. Disassemble the repair parts.
8. Remove the nicks, scratches, gouges, burrs, and sharp edges from the repair parts and the cut edges of the floor beam.
9. Apply a chemical conversion coating to the repair parts and the cut edges of the floor beam. Refer to SRM 51-10-2.
10. Apply a finish to the repair parts and to the bare surfaces of the floor beam. Refer to SOPM 20-41-02.
    A. Apply two layers of BMS 10-11, Type I primer.
    B. Apply one layer of BMS 10-11, Type II enamel, color 702 white gloss (optional).
11. Install the repair parts and the web stiffeners that were removed.
    A. Install the repair parts with BMS 5-95 sealant between the mating surfaces. Install a part 4 shim if necessary under the stiffener which overlaps the part 2 angle.
    B. Install the fasteners. Install the hex drive fasteners wet with BMS 5-95 sealant in transition fit holes.
12. Install the adjacent structure which was removed to get access to the damaged area.
13. Install the floor panels which were removed to get access to the damaged area. The steps that follow apply to all of the holes for the floor panel, stabilizer strap or cargo liner attachments.
    A. Apply a chemical conversion coating to the holes. Refer to SRM 51-10-2.
    B. Apply one layer of BMS 10-11, Type I primer to the holes. Refer to SOPM 20-41-02.
    C. Apply MIL-C-11796, Class 3 grease to the holes.
    D. Install a nut plate at each hole.
    E. Install the floor panel fasteners with MIL-C-11796, Class 3 grease and torque to 20-35 in-lbs.

NOTES

- THIS REPAIR WILL NOT HAVE AN EFFECT ON A STRUCTURALLY SIGNIFICANT ITEM (SSI) GIVEN IN SRM 51-00-4, FIG. 3. THUS, NO CHANGE TO THE SUPPLEMENTAL STRUCTURAL INSPECTION DOCUMENT (SSID) INSPECTION PROGRAM IS NECESSARY.
- ALL DIMENSIONS ARE IN INCHES, UNLESS GIVEN DIFFERENTLY.
- D = THE DIAMETER OF THE FASTENER
- EDGE MARGINS MUST BE A MINIMUM OF 1.7 D, UNLESS GIVEN DIFFERENTLY.
- MAKE THE EXTERNAL RADII ON THE EXTERNAL PARTS 0.38 INCH R UNLESS GIVEN DIFFERENTLY.
- USE SHIMS, FILLERS OR TAPERED FILLERS SO THAT A CLEARANCE BETWEEN PARTS IS NOT LARGER THAN 0.010 INCH BEFORE INSTALLATION OF THE FASTENER.
- WHEN YOU USE THIS REPAIR REFER TO:
  - SOPM 20-41-02 FOR APPLICATION OF FINISHES
  - SRM 51-10-1 FOR DAMAGE CLASSIFICATION
  - SRM 51-10-2 FOR PROTECTIVE TREATMENT OF METALLIC MATERIALS
  - SRM 51-20-4 FOR REPAIR SEALING
  - SRM 51-30 FOR FASTENER CODE, INSTALLATION AND REMOVAL, HOLE SIZES, AND EDGE MARGINS.

Section 41, 43 and 46 Repair To One Flange of the Floor Beam Upper or Lower Chord
Figure 7 (Sheet 1)

BOEING PROPRIETARY - Copyright © - Unpublished Work - See title page for details.

NOTES (CONTINUED)

[A] IF A FLOOR BEAM FLANGE IS TAPERED, AN EDGE MARGIN OF 1.7 D MUST BE KEPT. IF YOU CANNOT KEEP THIS EDGE MARGIN, THEN CUT THE FLOOR BEAM IN AN AREA THAT IS NOT TAPERED.

[B] BEND THE REPAIR ANGLES IN THE ANNEALED CONDITION, THEN HEAT TREAT AS SPECIFIED. THE BEND RADII ARE SHOWN IN SECTION A-A OF DETAIL I.

[C] THERE MUST BE A MINIMUM OF FOUR REPAIR FASTENERS THROUGH THE HORIZONTAL FLANGE OF THE PART 3 ANGLE (THIS DOES NOT INCLUDE FLOOR PANEL OR CARGO LINER FASTENERS). THIS IS NECESSARY INBOARD AND OUTBOARD OF THE FLOOR CHORD SPLICE.

[D] THERE MUST BE A MINIMUM OF TWO REPAIR FASTENERS THROUGH THE ENDS OF EACH FLANGE OF THE PART 2 ANGLE.

[E] ADJUST THE DISTANCE BETWEEN THE REPAIR FASTENERS AND THE LENGTH OF THE REPAIR PART IF THE REPAIR INCLUDES A FLOOR PANEL FASTENER.

[F] THERE MUST BE A MINIMUM OF FOUR REPAIR FASTENERS THROUGH THE VERTICAL FLANGE OF THE PART 3 ANGLES (THIS DOES NOT INCLUDE FLOOR PANEL OR CARGO LINER FASTENERS). THIS IS NECESSARY INBOARD AND OUTBOARD OF THE FLOOR CHORD SPLICE.

[G] THE EDGE MARGIN FOR THE VERTICAL FLANGE OF THE PARTS 2 AND 3 ANGLES MUST BE A MINIMUM OF 0.40 INCH.

[H] FILL THE SPACE BETWEEN PARTS WITH BMS 5-95 SEALANT.

[I] THIS REPAIR IS APPLICABLE TO THE FORWARD OR AFT SIDE OF THE FLOOR BEAM UPPER OR LOWER CHORD.

[J] THE REPAIR PARTS MUST NOT CAUSE A BLOCKAGE OF ANY FLOOR BEAM HOLES. MAKE THE CUTOUTS IN THE REPAIR PARTS THE SAME SHAPE AS THE HOLES THEY MUST GO AROUND IN THE FLOOR BEAM.

[K] YOU CAN REMOVE MATERIAL FROM TWO SIDES OF THE UPPER OR LOWER CHORD IF YOU INSTALL THE FOLLOWING REPAIR PARTS ON THE TWO SIDES OF THE WEB:

- THE -1 REPAIR FILLER
- THE -2 SUPPORT ANGLE
- THE -3 SUPPORT ANGLE.

IF A LENGTH OF THE FULL CHORD WIDTH IS DAMAGED, REFER TO FIGURE 5 FOR REPAIR.

FASTENER SYMBOLS

REFERENCE FASTENER LOCATION

FLOOR PANEL OR CARGO LINER FASTENER LOCATION. INSTALL A BACN10JR3CFD NUTPLATE WITH TWO BACRA5BA3D5 RIVETS OR TWO BACR15DR3 BLIND RIVETS AND THE SAME TYPE AND SIZE OF FLOOR PANEL FASTENER AS THE ONE THAT WAS REMOVED.

INITIAL FASTENER LOCATION. INSTALL A FASTENER AS GIVEN IN TABLE I. USE THE DIAMETER NECESSARY TO KEEP TRANSITION FIT HOLES.

REPAIR FASTENER LOCATION. INSTALL A BACB30NW6K() (PREFERRED) OR A BACB30FN6 (ALTERNATIVE) HEX DRIVE BOLT WITH A BACC30BL COLLAR.

REPAIR FASTENER LOCATION. INSTALL A BACB30MY6K() (PREFERRED) OR A BACB30FM6() (ALTERNATIVE) HEX DRIVE BOLT WITH A BACC30M COLLAR.

Section 41, 43 and 46 Repair To One Flange of the Floor Beam Upper or Lower Chord
Figure 7 (Sheet 2)

E74436

REPAIR FASTENERS		
INITIAL FASTENER	REPAIR FASTENER	REPAIR FASTENER (FOR HOLE CLEANUP, 1/32 INCH MAX OVERSIZE)
PROTRUDING HEAD RIVET 5/32 DIA.	BACB30MY6K() WITH A BACC30M COLLAR (PREFERRED) OR BACB30FM6 WITH A BACC30M COLLAR (ALTERNATIVE)	BACB30MY6K()X WITH A BACC30M COLLAR (PREFERRED) OR BACB30FP6 WITH A BACC30M COLLAR (ALTERNATIVE)
PROTRUDING HEAD RIVET 3/16 DIA.	BACB30MY6K()X WITH A BACC30M COLLAR (PREFERRED) OR BACB30FP6() WITH A BACC30M COLLAR (ALTERNATIVE)	BACB30MY6K()Y WITH A BACC30R COLLAR (PREFERRED) OR BACB30KK6 WITH A BACC30R COLLAR (ALTERNATIVE)
PROTRUDING HEAD RIVET 1/4 DIA.	BACB30MY8K()X WITH A BACC30M COLLAR (PREFERRED) OR BACC30FP8 WITH A BACC30M COLLAR (ALTERNATIVE)	BACB30MY8K()Y WITH A BACC30R COLLAR (PREFERRED) OR BACB30KK8 WITH A BACC30R COLLAR (ALTERNATIVE)
HEX DRIVE BOLT OR LOCKBOLT 3/16 DIA.	BACB30MY6K()X WITH A BACC30M COLLAR (PREFERRED) OR BACB30FP6() WITH A BACC30M COLLAR (ALTERNATIVE)	BACB30MY6K()Y WITH A BACC30R COLLAR (PREFERRED) OR BACB30KK6() WITH A BACC30R COLLAR (ALTERNATIVE)

TABLE I

REPAIR MATERIAL			
PART		QTY	MATERIAL
1	FILLER	1	USE THE SAME THICKNESS AS THE INITIAL FLOOR CHORD. USE 7075-T6.
2	ANGLE	1	0.071 CLAD 7075-0 [B] HT TR TO -T6
3	ANGLE	1	0.080 CLAD 7075-0 [B] HT TR TO -T6
4	SHIM (NOT TAPERED)	AS REQ'D	THICKNESS AS REQ'D. USE 2024-T3 OR 7075-T6

TABLE II

Section 41, 43 and 46 Repair To One Flange of the Floor Beam Upper or Lower Chord
Figure 7 (Sheet 3)

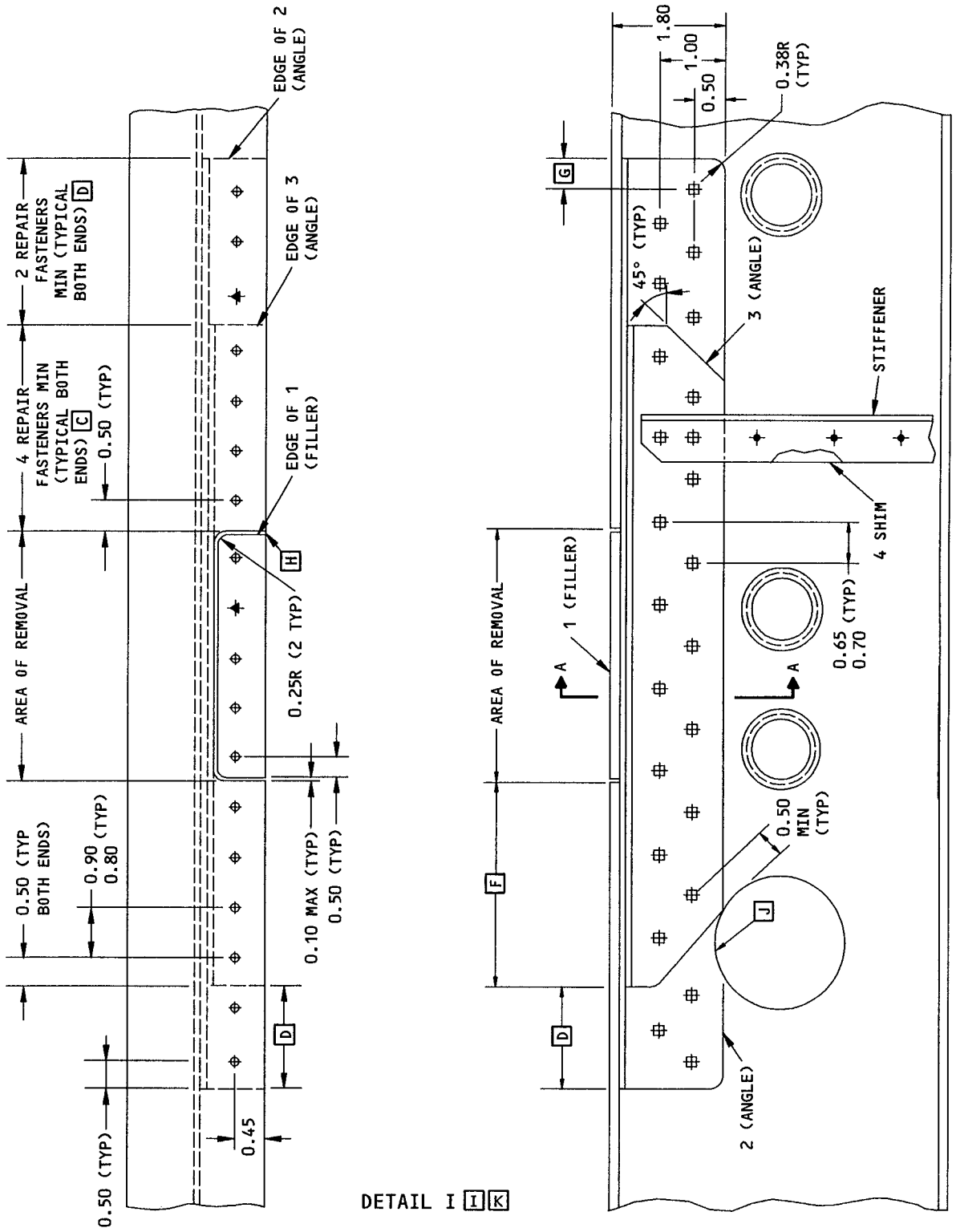

Section 41, 43 and 46 Repair To One Flange of the Floor Beam Upper or Lower Chord
Figure 7 (Sheet 4)

E74445

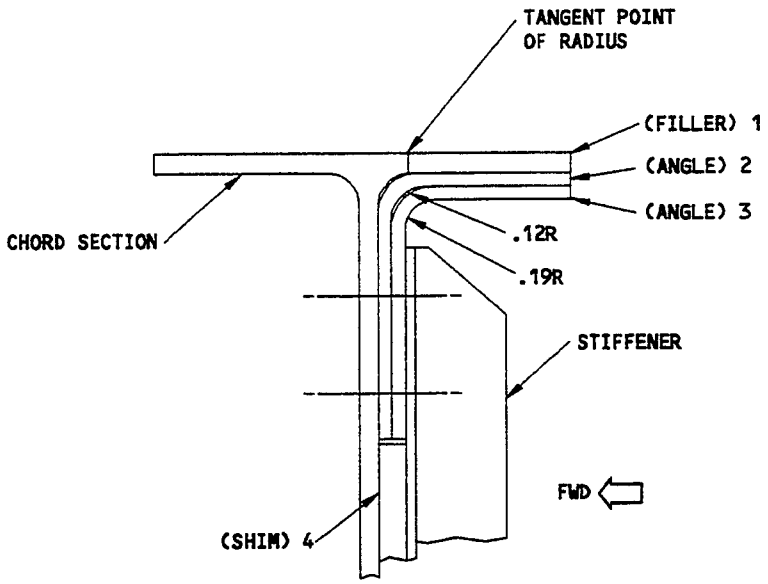

SECTION A-A

Section 41, 43, and 46 Repair To One Flange of the Floor Beam Upper or Lower Chord
Figure 7 (Sheet 5)

APPLICABILITY
INSTALLATION OF THIS ACCESS HOLE GIVES BETTER ACCESS FOR THE INSPECTION AND REPAIR OF STRUCTURE OUTBOARD OF BL 24.67, BETWEEN WL 195 AND WL 207, AND BETWEEN BS 178 AND BS 188.

REPAIR INSTRUCTIONS

1. Get access to the repair area. See Detail I and Detail II.
2. Remove the WL 195 intercostal to get better access. If the intercostal is damaged, refer to SRM 53-10-1 and SRM 53-10-11 for the intercostal allowable damage and repair data.
3. Cut out the center part of the initial web of the floor beam as shown in View A-A. This will remove the two initial flanged holes.
4. Make sure there are no cracks in the web at the edges of the cut. Do a high frequency eddy current (HFEC) inspection along the cut edges of the web. Refer to NDT, Part 6, 51-00-00.
5. Remove the fasteners at the +, ⊡, and ■ locations.
6. Remove and discard the vertical stiffener at BS 188.
7. Make the repair parts. Make sure the cutout in the part 1 filler will align with the cutout in the initial web. Make a flanged hole in the new part 2 web as given in BACD2001-60. Form the flange in the outboard direction. Make sure the center of the new flanged hole will be at the location that is one half of the distance between the outer fastener rows through the web. See Table I and View A-A.
8. Put the repair parts in position. Back drill the fastener holes at the +, ⊡, and ■ locations. Drill the repair fastener holes at the ✦ locations. Drill through the Part 1 filler and the Part 2 web at the tooling hole location.
9. Remove the repair parts.
10. Remove the nicks, scratches, gouges, burrs, and sharp edges from the repair parts and the initial structure.
11. Apply a chemical conversion coating to the repair parts and to the bare surfaces of the initial structure. Refer to SRM 51-10-2.
12. Apply one layer of BMS 10-11, Type I primer to the repair parts and to the bare surfaces of the initial structure. Refer to SOPM 20-41-02.
13. Install the repair parts with BMS 5-95 sealant on the mating surfaces. Put BMS 5-95 sealant in the clearances between the parts.
14. Install the fasteners at the +, ⊡, ■, and ✦ locations. Install the hex drive bolts wet with BMS 5-95 sealant.
15. Install an aluminum rivet at the tooling hole location. [A]
16. Put the WL 195 intercostal in position with BMS 5-95 sealant on the mating surfaces, and install the fasteners. Use fasteners that are the same type and diameter as the initial fasteners. If the intercostal is damaged, refer to SRM 53-10-1 and SRM 53-10-11 for the intercostal allowable damage and repair data.
17. Apply one layer of BMS 10-11, Type I primer to the repair area. Refer to SOPM 20-41-02.
18. Apply one layer of BMS 10-11, Type II enamel to the repair area. Refer to SOPM 20-41-02.
19. Apply one layer of BMS 3-23 or BMS 3-29 corrosion inhibiting compound to the repair area.
20. Close access to the repair area.

BL 24.67 Floor Beam Web Access Hole Installation
Between BS 178 and BS 188
Figure 8 (Sheet 1)

NOTES

- D = THE DIAMETER OF THE FASTENER.
- ALL DIMENSIONS ARE IN INCHES, UNLESS DIFFERENTLY SPECIFIED.
- EDGE MARGINS MUST BE A MINIMUM OF 1.7D IN THE REPAIR PARTS, UNLESS DIFFERENTLY SPECIFIED.
- KEEP A 4D TO 6D DISTANCE BETWEEN REPAIR FASTENERS.
- THIS INSTALLATION IS APPLICABLE TO THE LEFT SIDE AND THE RIGHT SIDE OF THE AIRPLANE.
- USE SHIMS AS NECESSARY TO KEEP THE GAPS 0.010 INCH OR LESS BEFORE YOU INSTALL THE FASTENERS.
- S = THE DISTANCE BETWEEN THE OUTER FASTENER ROWS THROUGH THE PART 2 WEB.
- WHEN YOU USE THIS REPAIR, REFER TO:
  - AMM 51-21 FOR INTERIOR AND EXTERIOR FINISHES
  - AMM 51-31 FOR SEALS AND SEALING
  - BACD 2001-60 FOR MAKING FLANGED HOLES
  - BAC 5602 OR MIL-H-6088 FOR HEAT TREATMENT OF ALUMINUM ALLOYS
  - NDT PART 6, 51-00-00 FOR THE EDDY CURRENT PROCEDURES FOR GENERAL STRUCTURES
  - SOPM 20-41-02 FOR APPLICATION OF FINISHES
  - SRM 51-10-1 FOR INVESTIGATION AND CLEANUP OF DAMAGE, AND SMOOTHNESS OF REWORKED METAL SURFACES
  - SRM 51-10-2 FOR PROTECTIVE TREATMENT OF METALLIC AND GRAPHITE MATERIALS
  - SRM 51-20-4 FOR REPAIR SEALING
  - SRM 51-30 FOR FASTENER CODE, INSTALLATION AND REMOVAL, HOLE SIZES, AND EDGE MARGINS
  - SRM 53-10-11 FOR REPAIR OF THE WL 195 INTERCOSTAL
  - SRM 53-10-1 FOR WL 195 INTERCOSTAL ALLOWABLE DAMAGE

[A] PICK UP THE TOOLING HOLE AS A PART OF THE FASTENER PATTERN. INSTALL A 2117-T3 OR -T4 ALUMINUM PROTRUDING HEAD RIVET AT THE TOOLING HOLE LOCATION. KEEP A 1.7D MINIMUM EDGE MARGIN FOR THE TOOLING HOLE. INSTALL THE ADJACENT CORNER REPAIR FASTENER AT A LOCATION WHERE YOU CAN KEEP A 4D TO 6D DISTANCE BETWEEN THE TWO FASTENERS (D IS THE AVERAGE DIAMETER OF THE FASTENERS).

[B] MAKE THE FLANGED HOLE AS GIVEN IN BACD2001-60 BEFORE YOU HEAT TREAT THE WEB. HEAT TREAT THE WEB TO THE -T6 CONDITION BEFORE YOU INSTALL THE WEB. REFER TO BAC 5602 OR MIL-H-6088.

[C] FILL THE CLEARANCE BETWEEN THE PARTS WITH BMS 5-95 SEALANT.

[D] THE GEOMETRY OF THE LOWER CHORD FLANGE CAN BE DIFFERENT ON DIFFERENT AIRPLANES.

[E] MAKE THE PART 3 STIFFENER WITH THE SAME DIMENSIONS AS THE INITIAL VERTICAL STIFFENER, BUT WITHOUT JOGGLES.

FASTENER SYMBOLS

REFERENCE FASTENER LOCATION.

REPAIR FASTENER LOCATION. INSTALL A BACR15FT5D RIVET.

INITIAL FASTENER LOCATION. INSTALL A FASTENER THAT IS THE SAME TYPE AS THE INITIAL FASTENER WITH THE SAME DIAMETER. USE 1/32 OVERSIZE RIVET IF NECESSARY.

INITIAL FASTENER LOCATION. INSTALL A BACB30NX6K()X HEX DRIVE BOLT WITH A BACC30X COLLAR.

INITIAL FASTENER LOCATION. INSTALL A BACB30NW6K()X HEX DRIVE BOLT WITH A BACC30M COLLAR.

REPAIR MATERIAL			
PART		QTY	MATERIAL
1	FILLER	1	CLAD 7075-T6 SHEET, 0.090 THICK
2	WEB	1	CLAD 7075-0 SHEET, 0.063 THICK [B]
3	STIFFENER	1	AND10134-0702 X 11.6 LONG, 7075-T6511 EXTRUSION [E]

TABLE I

BL 24.67 Floor Beam Web Access Hole Installation
Between BS 178 and BS 188
Figure 8 (Sheet 2)

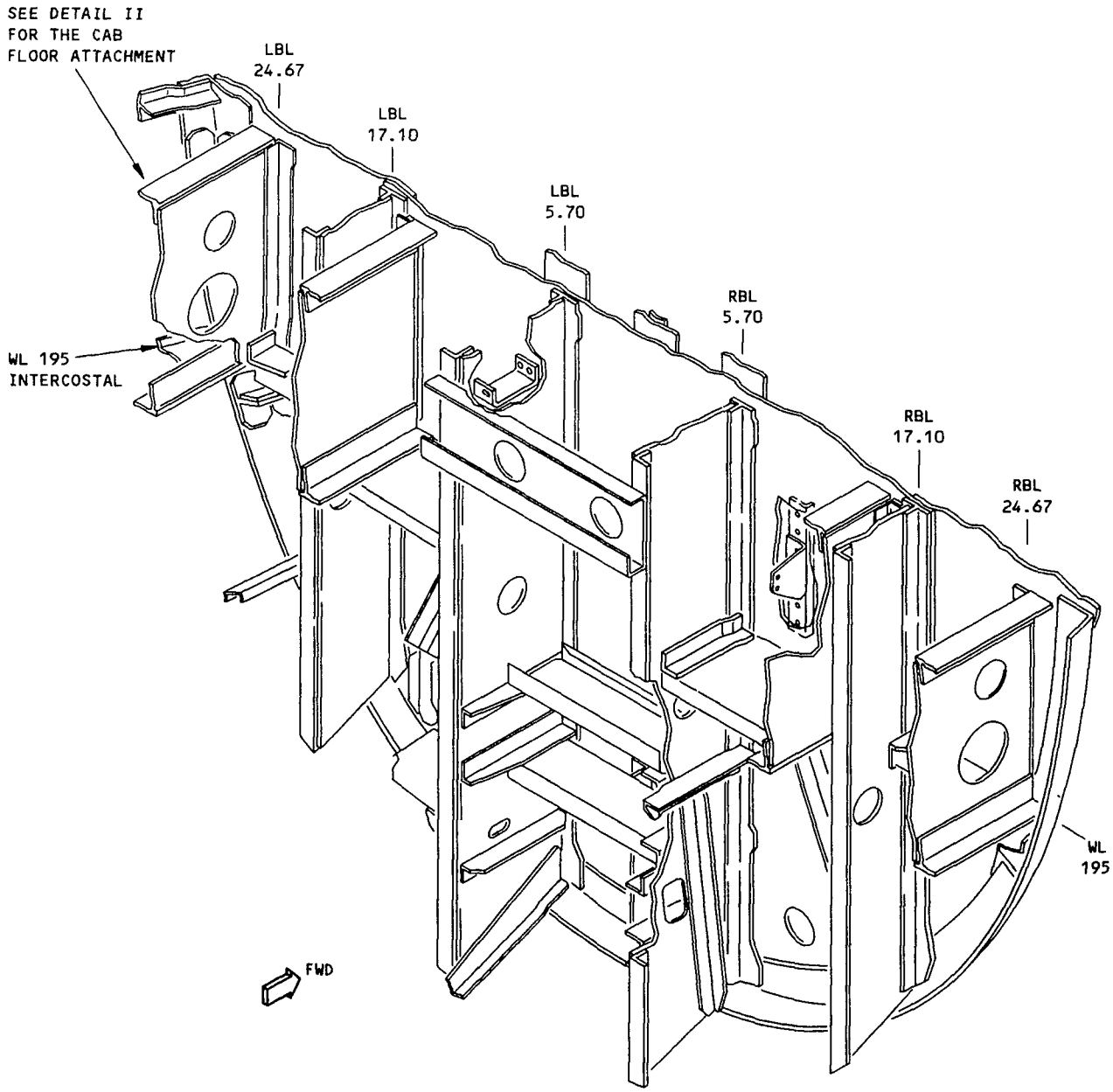

BODY STATION 178 BULKHEAD BELOW WL 207

REAR VIEW

DETAIL I

BL 24.67 Floor Beam Web Access Hole Installation
Between BS 178 and BS 188
Figure 8 (Sheet 3)

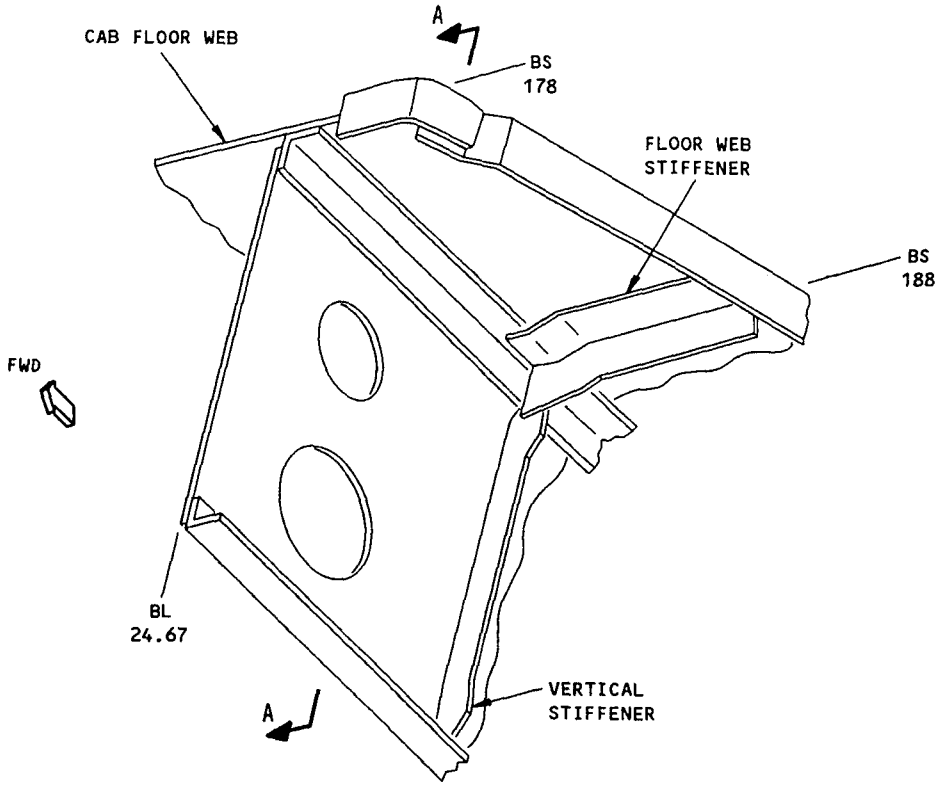

BL 24.67 FLOOR BEAM AND CAB FLOOR

LEFT SIDE IS SHOWN, RIGHT SIDE IS OPPOSITE

DETAIL II

BL 24.67 Floor Beam Web Access Hole Installation
Between BS 178 and BS 188
Figure 8 (Sheet 4)

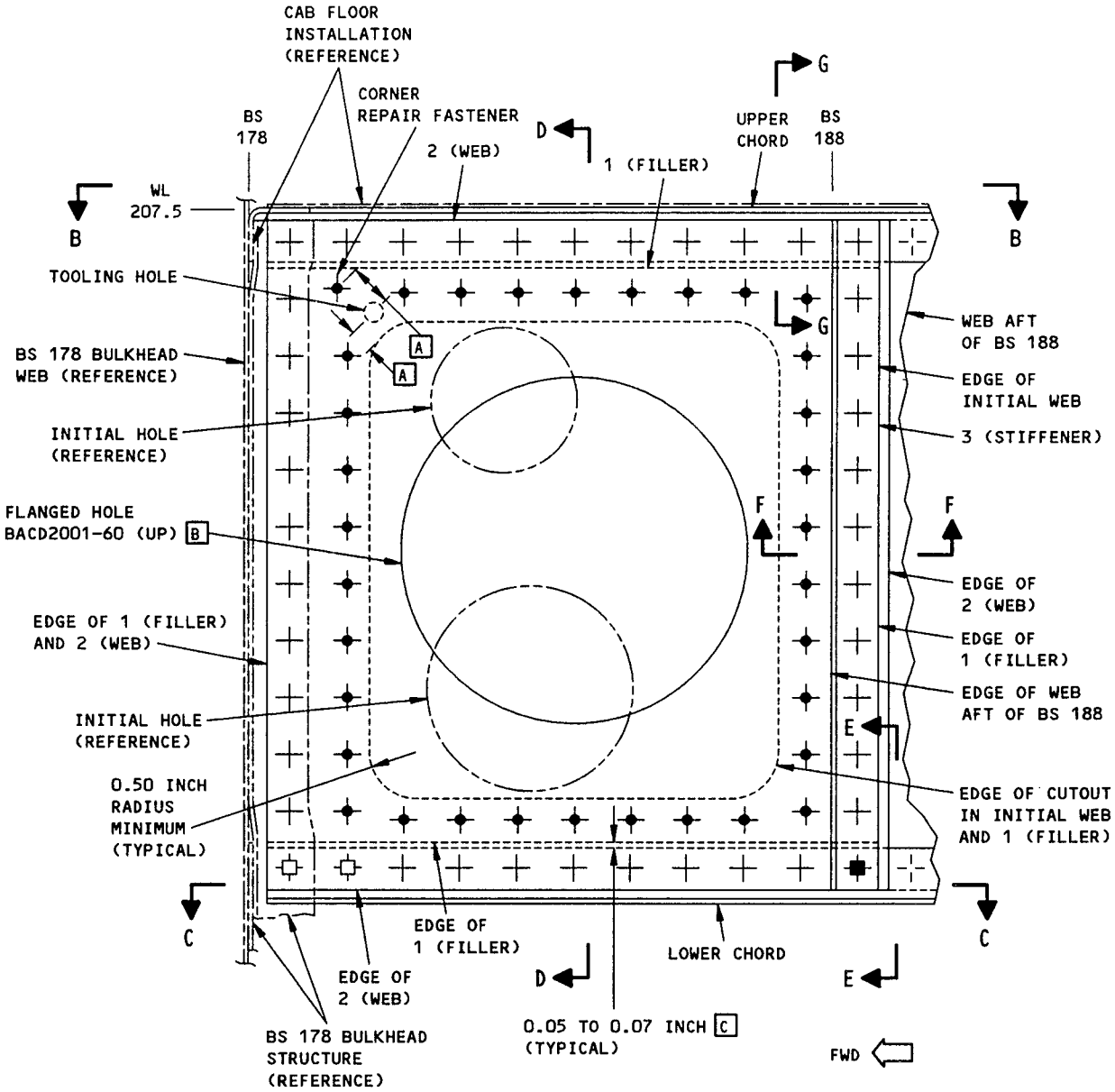

VIEW A-A

BL 24.67 Floor Beam Web Access Hole Installation
Between BS 178 and BS 188
Figure 8 (Sheet 5)

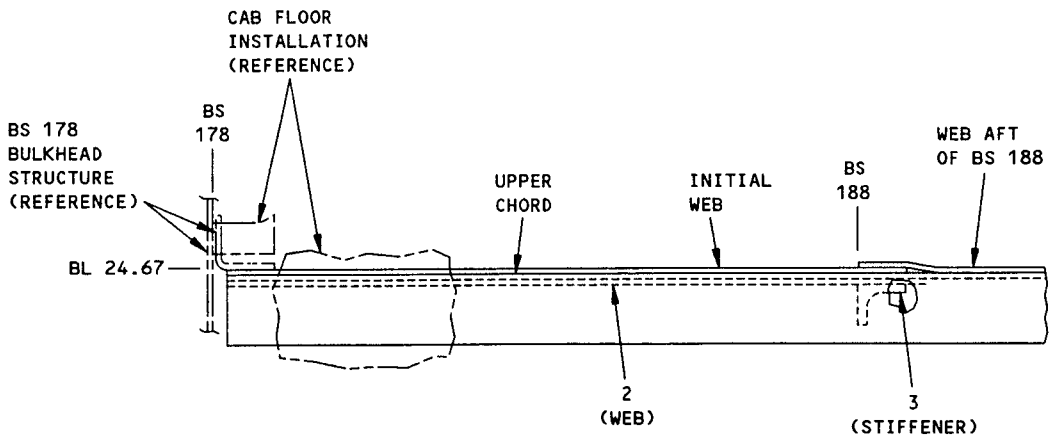

SECTION B-B

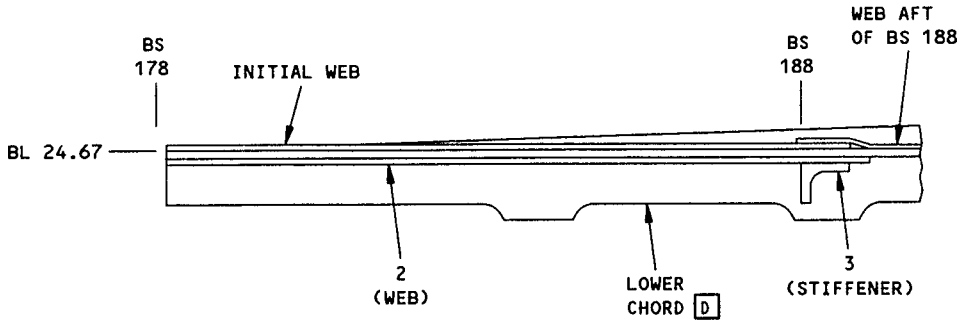

SECTION C-C

BL 24.67 Floor Beam Web Access Hole Installation
Between BS 178 and BS 188
Figure 8 (Sheet 6)

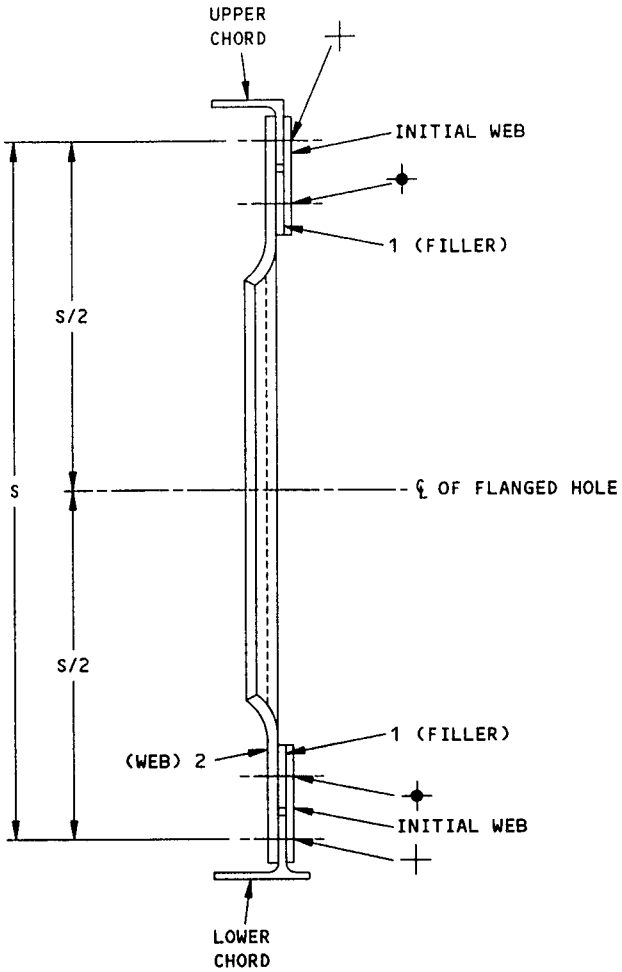

SECTION D-D

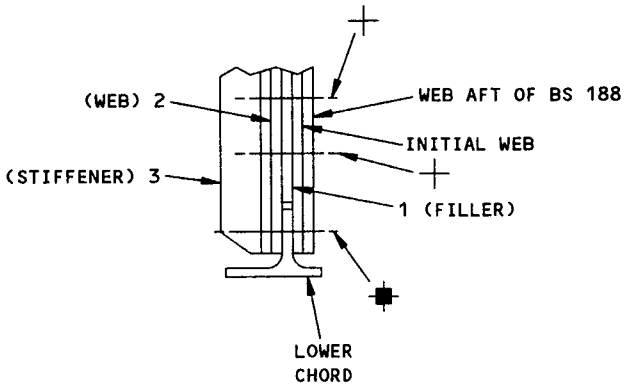

SECTION E-E

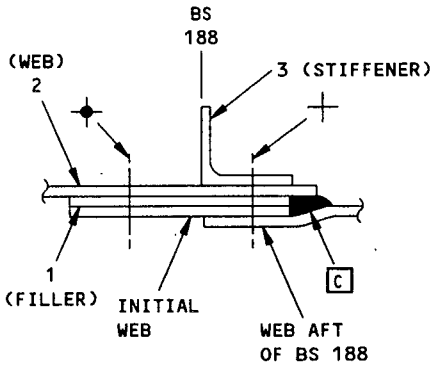

SECTION F-F

BL 24.67 Floor Beam Web Access Hole Installation
Between BS 178 and BS 188
Figure 8 (Sheet 7)

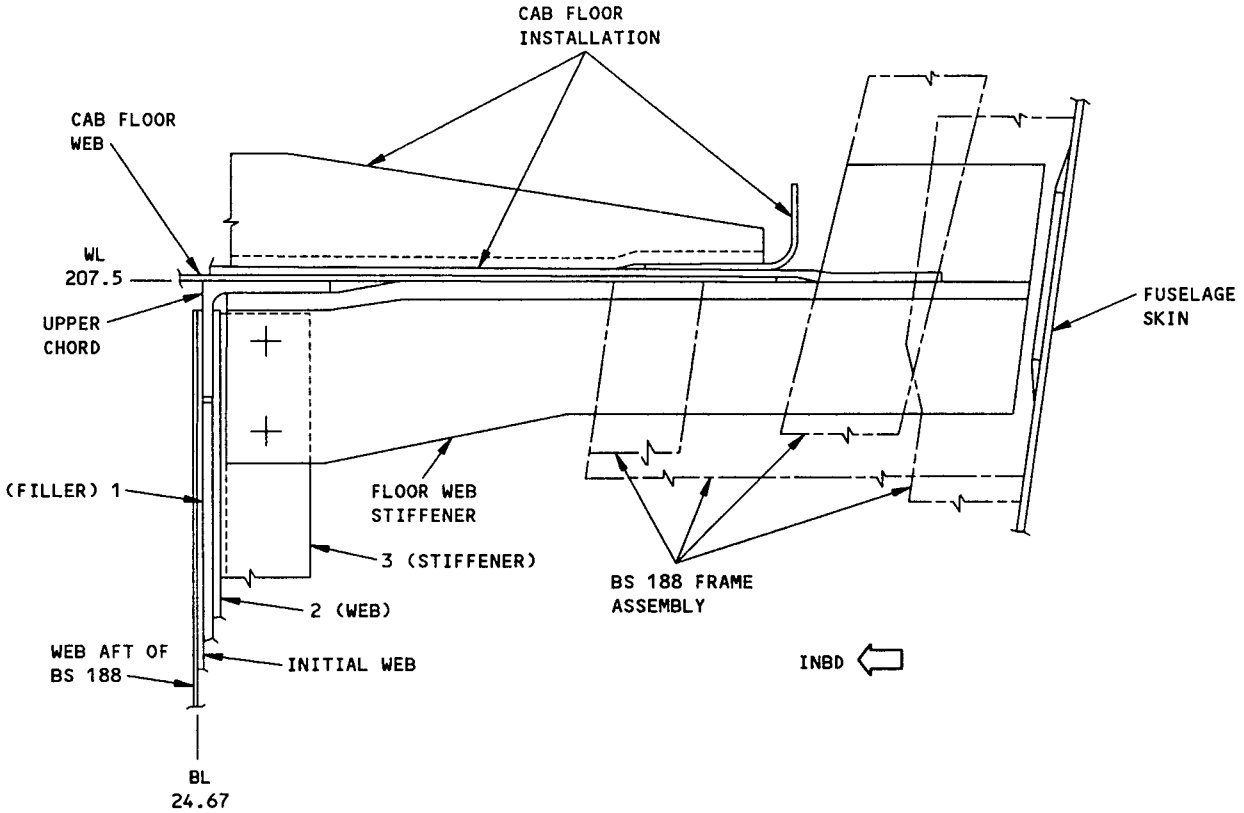

SECTION G-G

BL 24.67 Floor Beam Web Access Hole Installation
Between BS 178 and BS 188
Figure 8 (Sheet 8)

SERVICE BULLETIN REPAIRS - INTERCOSTALS

The following Service Bulletins contain intercostal repairs which are available for use where specific damage has been encountered. Usually, the Service Bulletin also covers preventive modification data which operators are encouraged to use to eliminate the need for repair.

DAMAGED AREA	CUM LINE NUMBER EFFECTIVITY [A]	SB NUMBER
FUSELAGE - FORWARD SERVICE DOORWAY, AFT FRAME INSPECTION AND REPAIR	1 THRU 1426	737-53A1108

[A] FOR AIRPLANES ON WHICH PREVENTIVE MODIFICATION HAS NOT BEEN ACCOMPLISHED

REPAIR INSTRUCTIONS

1. Get access to the damaged area.

   CAUTION: MAKE SURE NOT TO DAMAGE THE WIRE BUNDLES ADJACENT TO THE REPAIR AREA. PROTECT THE WIRE BUNDLES TEMPORARILY AS NECESSARY.

2. Remove the fasteners from the damaged web, the strap and other structure as necessary.
3. Remove the damaged web, the strap, and the clip frame. See Details I or III.
4. Make the repair parts. See Table I and Detail II or Detail IV. [B] [C]
5. Temporarily assemble the repair parts and drill the fastener holes.

   Note: Keep the pull-up limit to a maximum of 0.010 inch. If shims are necessary, refer to SRM 51-20-1. The maximum shim thickness permitted is 0.04 inch.

6. Disassemble the repair parts.
7. Close ream all fastener holes common to the Part 1 (Web) and Part 4 (Strap).
8. Remove the nicks, scratches, gouges, burrs, and sharp edges from the repair parts.
9. Cadmium plate the Part 1 (Web) and Part 4 (Strap). Refer to SRM 51-20-01.
10. Apply a chemical conversion coating to the aluminum repair parts and to the bare surfaces of the initial parts. Refer to SRM 51-10-2. Do not apply chemical conversion coating on the Part 1 (angle) and Part 4 (strap).
11. Apply two layers of BMS 10-11, Type I primer to the repair parts and to the bare surfaces of the initial parts. Refer to SOPM 20-41-02.
12. Install the repair parts. Apply BMS 5-95 sealant to the mating surfaces. Apply fillet seals and fill all gaps with BMS 5-95 sealant. Refer to SRM 51-20-4.
13. Install the fasteners. Fasteners that are not made of aluminum must be installed wet with BMS 5-95 sealant.
14. Install the Part 5 (Grommet) at the lightening hole locations. [A]

    Note: Make sure the grommets will protect the wire bundles.

15. Apply one layer of BMS 3-23 corrosion inhibiting compound to the repair area. Refer to SRM 51-10-2.

NOTES

- THIS REPAIR IS REFERENCED IN THE SERVICE BULLETIN 737-53-1204.
- D = FASTENER DIAMETER
- FOR THE REPAIR FASTENER LOCATION USE THE SAME FASTENER SPACING USED IN THE ADJACENT STRUCTURE. FASTENER SPACING MUST BE 4D-6D.
- USE SHIM FILLERS OR TAPERED FILLERS SO THAT THE GAPS BETWEEN THE PARTS IS NOT LARGER THAN .010 INCH BEFORE THE FASTENER INSTALLATION.
- KEEP A MINIMUM EDGE MARGIN OF 2D IN ALL REPAIR PARTS. KEEP A MINIMUM OF 1.5D IN ALL INITIAL PARTS.
- WHEN YOU USE THIS REPAIR REFER TO:
  - NDT PART 1, 51-01-00 FOR SELECTION OF INSPECTION PROCEDURES
  - NDT PART 6, 51-00-01 FOR SURFACE EDDY CURRENT INSPECTION OF THE ALUMINUM PARTS
  - NDT PART 6, 51-00-02 FOR EDDY CURRENT INSPECTION OF THE FASTENER HOLES IN THE ALUMINUM PARTS
  - SOPM 20-41-02 FOR APPLICATION OF FINISHES
  - SOPM 20-50-09 INSTALLATION OF PROTECTIVE GROMMETS
  - SRM 51-10-01 FOR INVESTIGATION AND CLEANUP OF DAMAGE
  - SRM 51-10-2 PROTECTIVE TREATMENT OF METALLIC AND NON-METALLIC MATERIALS
  - SRM 51-20-04 FOR REPAIR SEALING
  - SRM 51-30 FOR FASTENER CODES, INSTALLATION AND REMOVAL, HOLE SIZES AND EDGE MARGINS

[A] BOND THE PART 5 (GROMMET) AT THE LIGHTENING HOLE LOCATIONS WITH BAC5010 TYPE 82 ADHESIVE. REFER TO SOPM 20-50-09.

[B] SEE DETAIL II FOR AIRPLANES WITH CUM LINE NUMBERS 1 - 32.

[C] SEE DETAIL IV FOR ALL AIRPLANES NOT LISTED IN [B]. (THE SHAPE OF THE WEB IS DIFFERENT ON THESE AIRPLANES).

[D] REMOVE THESE INITIAL PARTS.

Stringer 16L Intercostal -
Web Repair Between BS 351 and BS 360
Figure 1 (Sheet 1)

BOEING PROPRIETARY - Copyright © - Unpublished Work - See title page for details.

FASTENER SYMBOLS

- REFERENCE FASTENER LOCATION
- INITIAL FASTENER LOCATION. INSTALL A BACB30VT6K() HEX DRIVE BOLT WITH A BACC30BL6 COLLAR.
- REPAIR FASTENER LOCATION. INSTALL A BACB30VT6K() HEX DRIVE BOLT WITH A BACC30BL6 COLLAR.
- INITIAL FASTENER LOCATION. INSTALL A BACB30NX8K()X HEX DRIVE BOLT WITH A BACC30X8 COLLAR.
- INITIAL FASTENER LOCATION. INSTALL A BACB30NX6K()Y HEX DRIVE BOLT WITH A BACC30R6 COLLAR.
- INITIAL FASTENER LOCATION. INSTALL A SAME TYPE AND SIZE AS THE INITIAL FASTENER
- INITIAL FASTENER LOCATION. INSTALL A BACB30NX6K()X HEX DRIVE BOLT WITH A BACC30M6 COLLAR.

PART NO.	PART	QTY	MATERIAL
1	WEB	1	0.040 INCH CRES 301 1/2 HARD OPTIONAL 0.040 INCH 17-7 PH TH 1050
2	TEE	1	0.078 TO 0.100 INCH THICK 7075-T73511 OR 7075-T6511
3	FILLER	1	0.050 INCH 2024-T3 CLAD
4	STRAP	1	0.050 INCH CRES 301 1/2 HARD OR 0.050 INCH 17.7 PH TH 1050
5	GROMMET	2	NAS 557-32C 2.00 INCHES ID

TABLE I

Stringer 16L Intercostal -
Web Repair Between BS 351 and BS 360
Figure 1 (Sheet 2)

BOEING PROPRIETARY - Copyright © - Unpublished Work - See title page for details.

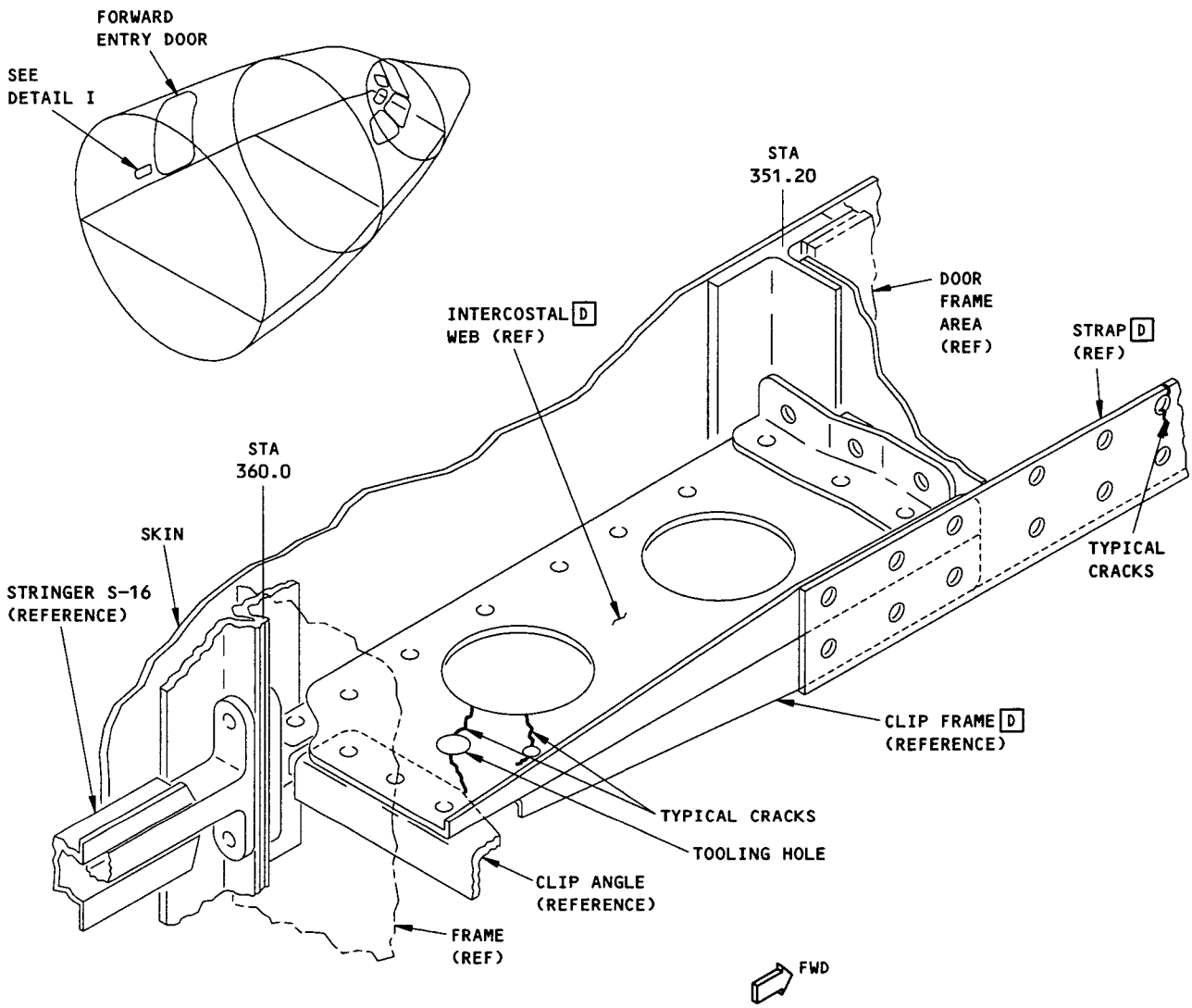

NOTE: THE CRACKS CAN BE FOUND ON THE INBOARD AFT CORNER OF THE INTERCOSTAL WEB. THE CRACKS CAN EXTEND FROM THE LIGHTENING HOLE TO THE INBOARD VERTICAL FLANGE OF THE WEB. THE CRACKS CAN EXTEND THROUGH THE TOOLING HOLE OR THROUGH THE FASTENER HOLES.

LOCATION OF TYPICAL INTERCOSTAL WEB CRACKS
DETAIL I B

Stringer 16L Intercostal -
Web Repair Between BS 351 and BS 360
Figure 1 (Sheet 3)

BOEING PROPRIETARY - Copyright © - Unpublished Work - See title page for details.

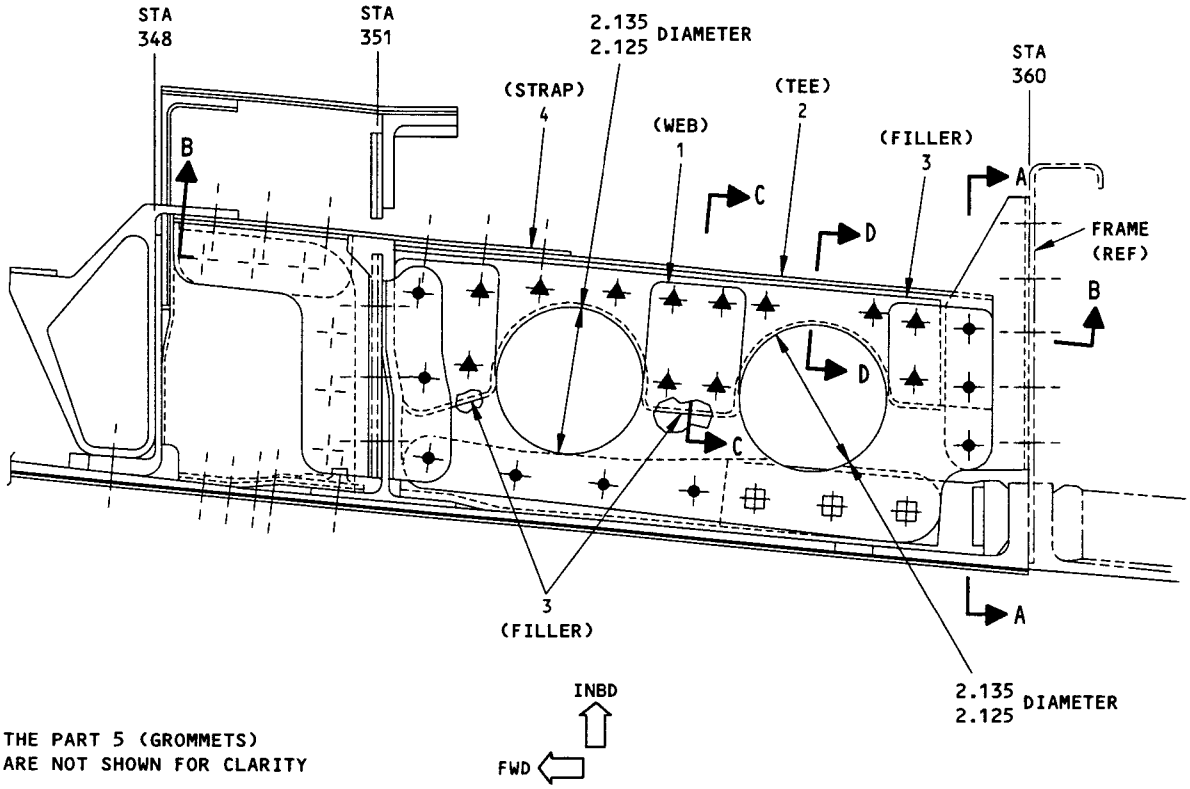

NOTE: THE PART 5 (GROMMETS)
ARE NOT SHOWN FOR CLARITY

INTERCOSTAL WEB REPAIR
DETAIL II [B]

Stringer 16L Intercostal -
Web Repair Between BS 351 and BS 360
Figure 1 (Sheet 4)

BOEING PROPRIETARY - Copyright © - Unpublished Work - See title page for details.

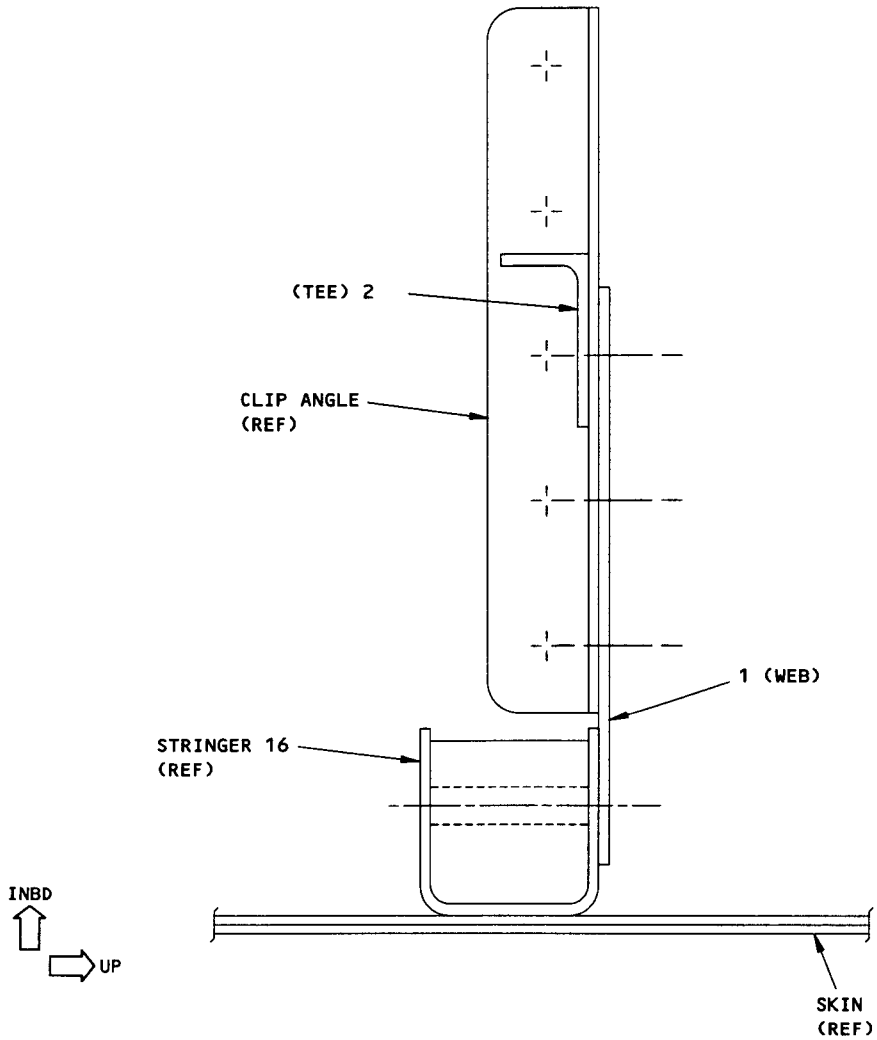

SECTION A-A [B]

Stringer 16L Intercostal -
Web Repair Between BS 351 and BS 360
Figure 1 (Sheet 5)

BOEING PROPRIETARY - Copyright © - Unpublished Work - See title page for details.

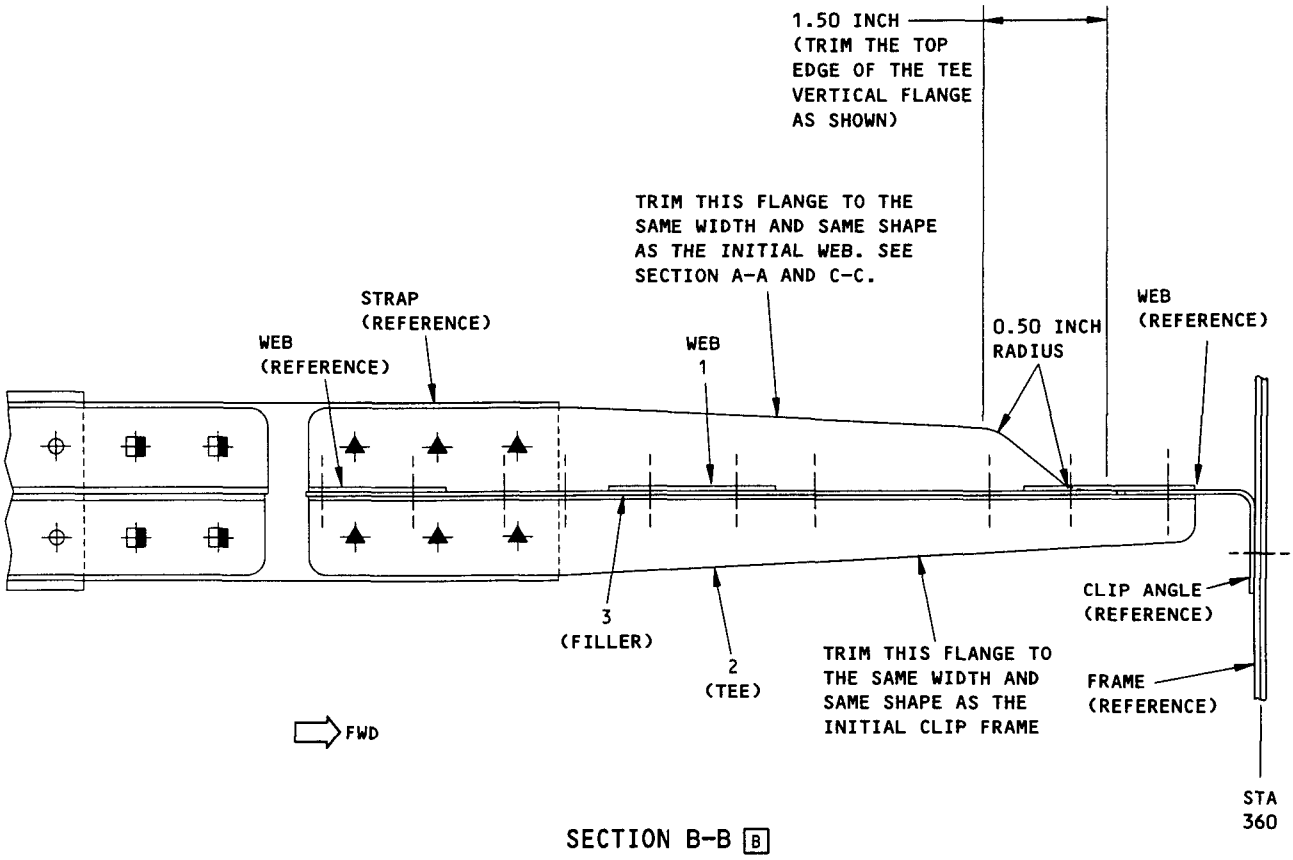

SECTION B-B [B]

Stringer 16L Intercostal -
Web Repair Between BS 351 and BS 360
Figure 1 (Sheet 6)

BOEING PROPRIETARY - Copyright © - Unpublished Work - See title page for details.

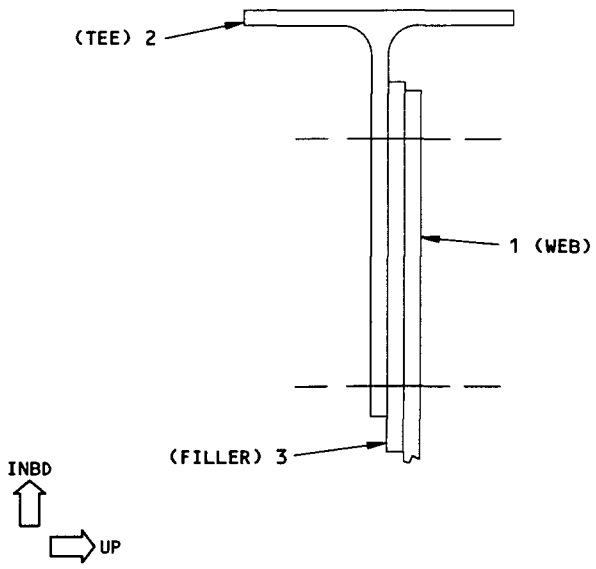

SECTION C-C

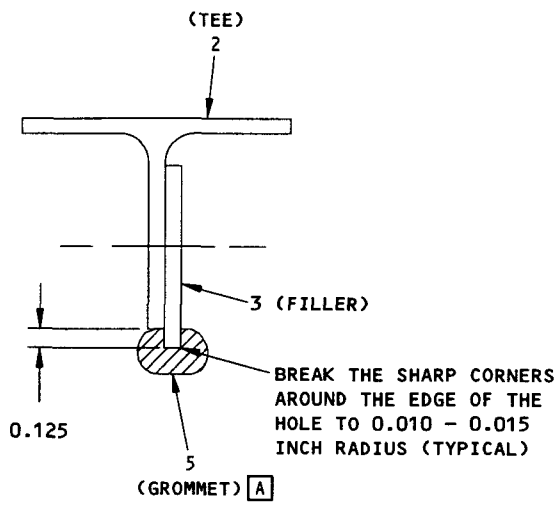

SECTION D-D

Stringer 16L Intercostal -
Web Repair Between BS 351 and BS 360
Figure 1 (Sheet 7)

BOEING PROPRIETARY - Copyright © - Unpublished Work - See title page for details.

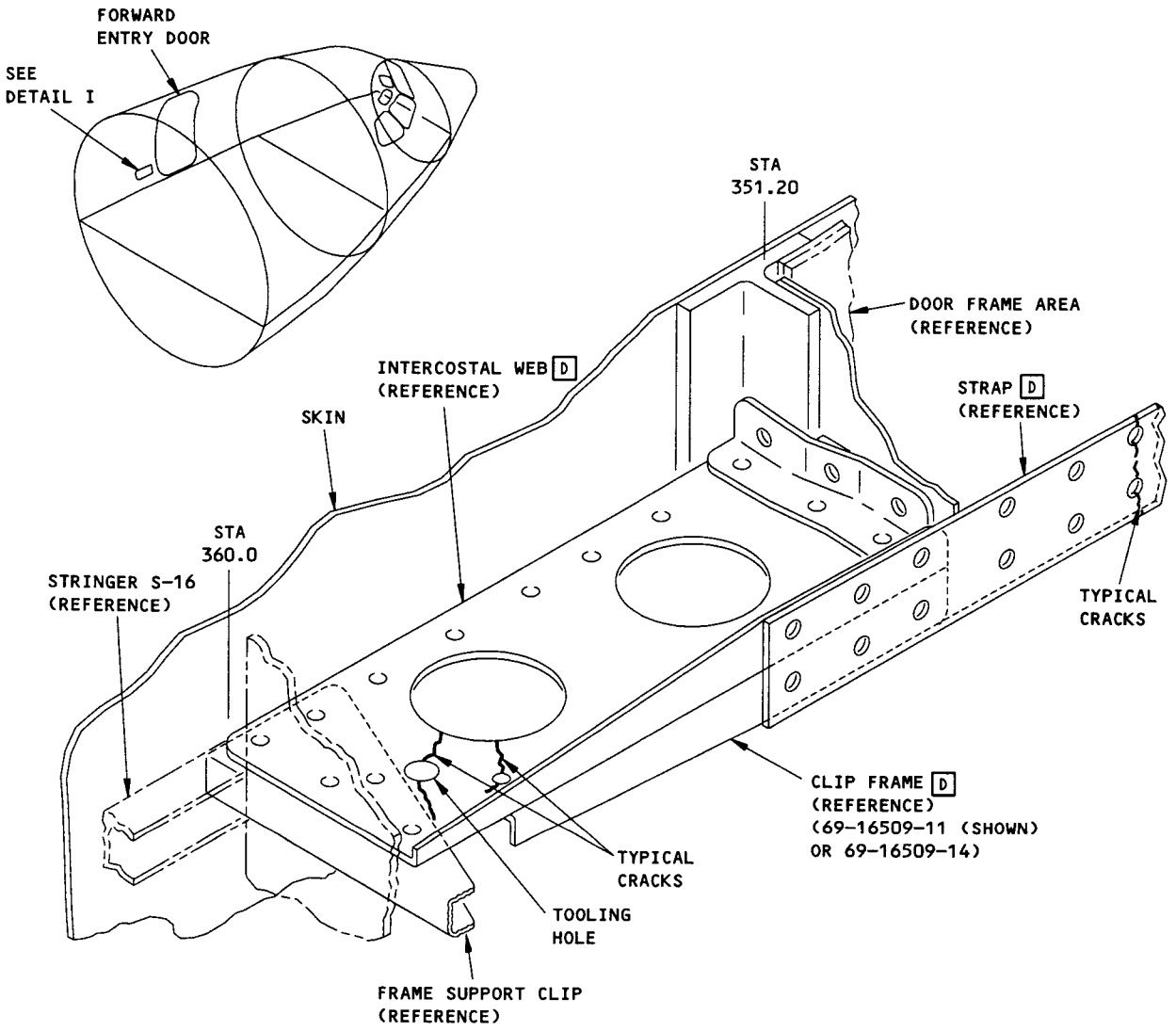

NOTE: THE CRACKS CAN BE FOUND ON THE INBOARD AFT CORNER OF THE INTERCOSTAL WEB. THE CRACKS CAN EXTEND FROM THE LIGHTENING HOLE TO THE INBOARD VERTICAL FLANGE OF THE WEB. THE CRACKS CAN EXTEND THROUGH THE TOOLING HOLE OR THROUGH THE FASTENER HOLES.

LOCATION OF TYPICAL INTERCOSTAL WEB CRACKS
DETAIL III C

Stringer 16L Intercostal -
Web Repair Between BS 351 and BS 360
Figure 1 (Sheet 8)

BOEING PROPRIETARY - Copyright © - Unpublished Work - See title page for details.

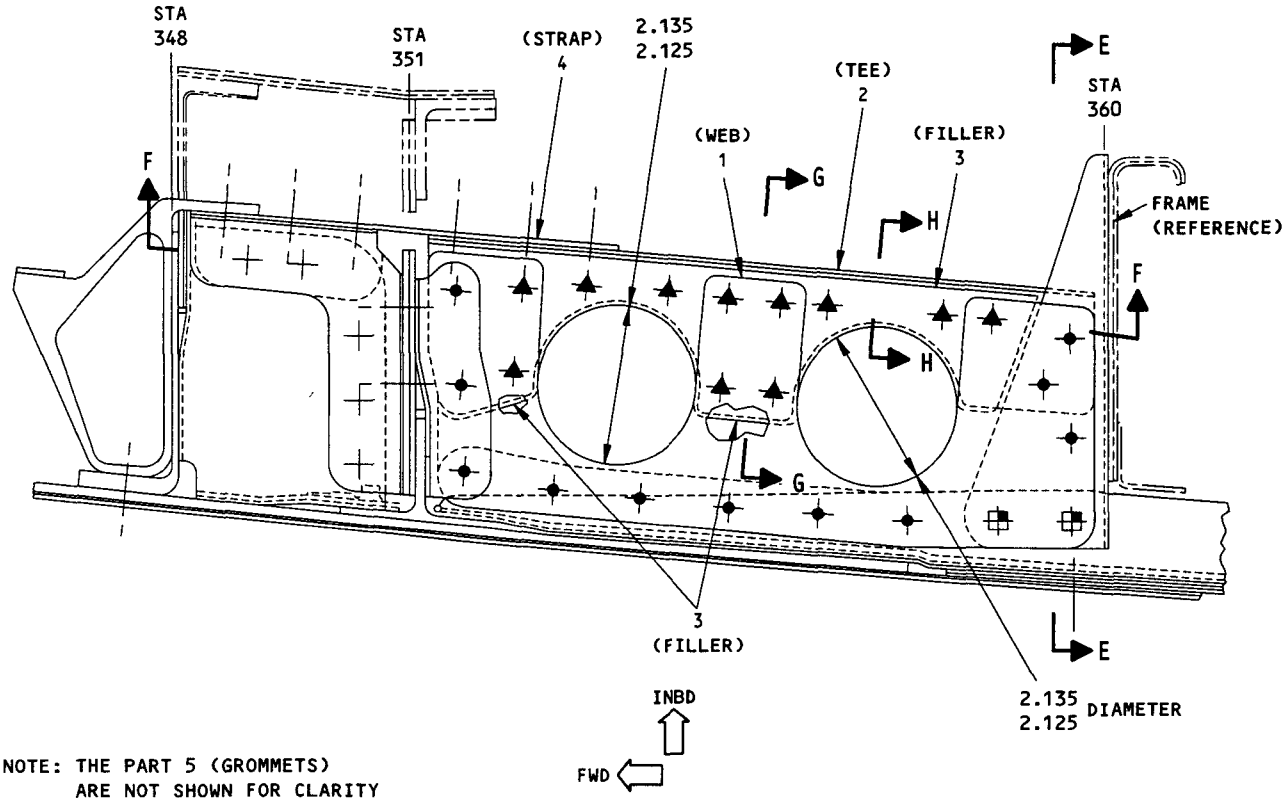

NOTE: THE PART 5 (GROMMETS)
ARE NOT SHOWN FOR CLARITY

INTERCOSTAL WEB REPAIR
DETAIL IV C

Stringer 16L Intercostal -
Web Repair Between BS 351 and BS 360
Figure 1 (Sheet 9)

BOEING PROPRIETARY - Copyright © - Unpublished Work - See title page for details.

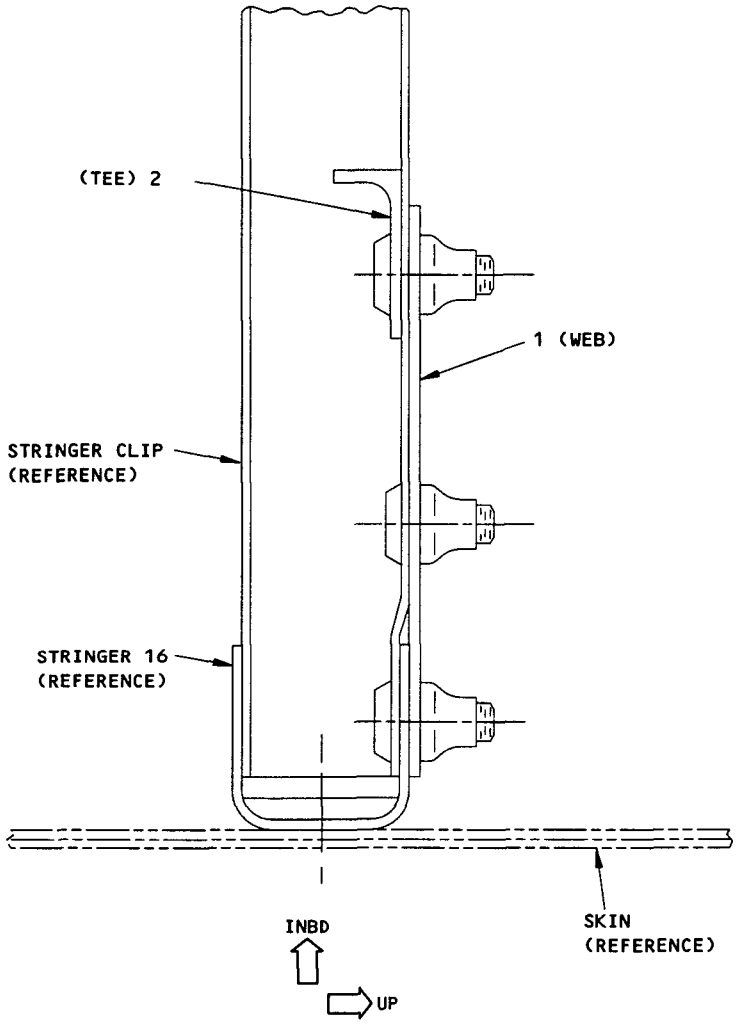

SECTION E-E

Stringer 16L Intercostal -
Web Repair Between BS 351 and BS 360
Figure 1 (Sheet 10)

BOEING PROPRIETARY - Copyright © - Unpublished Work - See title page for details.

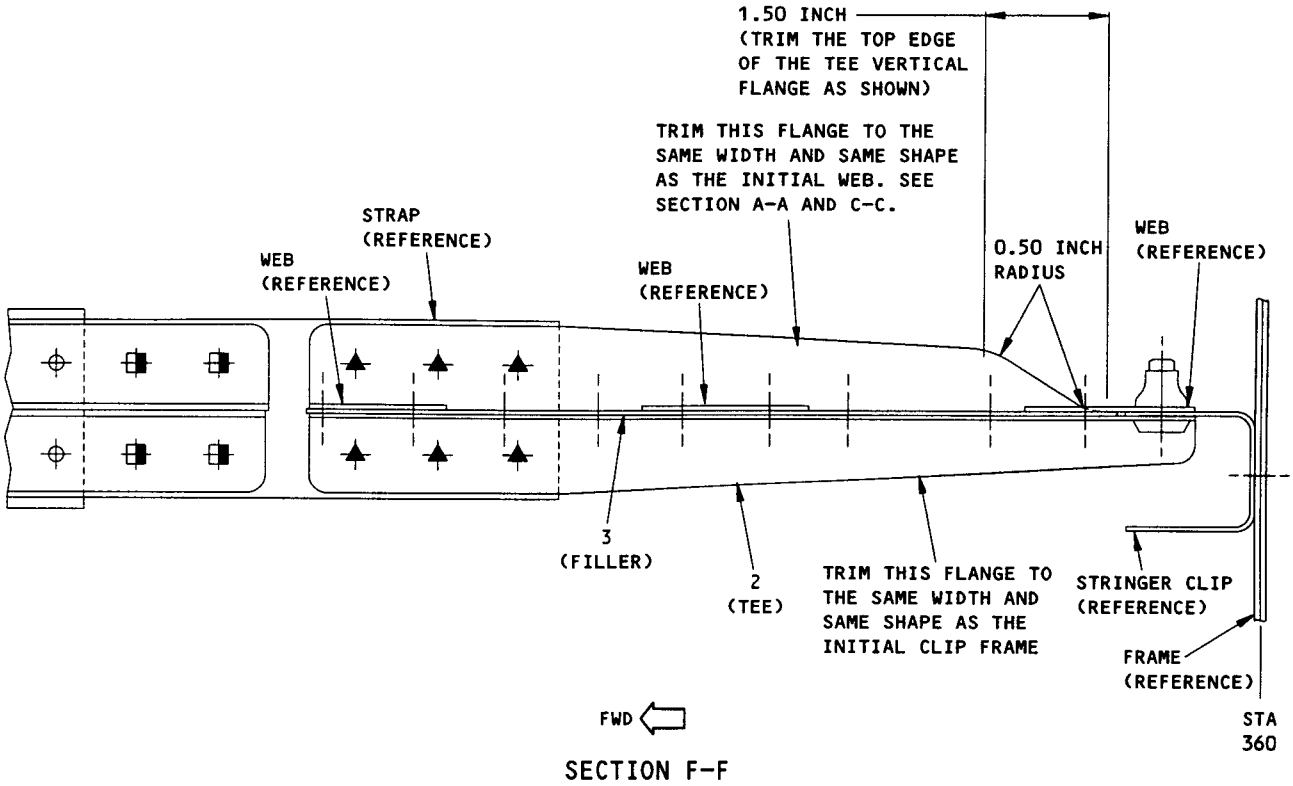

SECTION F-F

Stringer 16L Intercostal -
Web Repair Between BS 351 and BS 360
Figure 1 (Sheet 11)

BOEING PROPRIETARY - Copyright © - Unpublished Work - See title page for details.

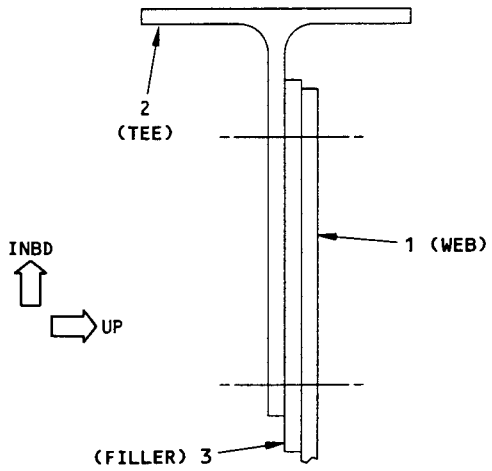

SECTION G-G

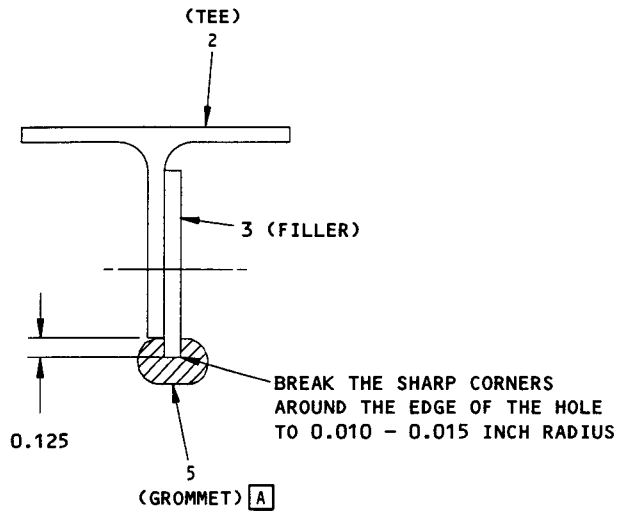

SECTION H-H

Stringer 16L Intercostal -
Web Repair Between BS 351 and BS 360
Figure 1 (Sheet 12)

BOEING PROPRIETARY - Copyright © - Unpublished Work - See title page for details.

APPLICABILITY

THIS REPAIR IS APPLICABLE TO THE FORWARD AIRSTAIRS UPPER SILL WEB CRACK DAMAGE AT STA 312 FOR AIRPLANES WITH A FORWARD AIRSTAIR DOOR.

A WEB SPLICE REPAIR IN THE UPPER SILL AT THE FORWARD AIRSTAIR DOOR STOP IS SHOWN IN DETAIL II. IF YOU CAN NOT INSTALL THE WEB SPLICE AS SHOWN, CONTACT BOEING.

THIS CRACK REPAIR IS REFERENCED IN SB 737-53A1269.

REPAIR INSTRUCTIONS

1. Get access to the damaged area.
2. Remove the fasteners from the damaged web part. See Detail II.
3. Remove the adjacent parts from repair area. Remove and discard the initial radius filler but remove and keep the stop fitting, flat filler and the tapered shim as necessary. See Detail II.
4. Cut and keep the damaged section of the upper sill web as shown in Detail II. [C] Make sure the initial fastener holes have a minimum edge margin. Make sure you do not damage the adjacent structure.
5. Make the repair parts. See Detail II and Table I.
6. Assemble the repair parts and drill the fastener holes. See Detail II.
7. Disassemble the repair parts.
8. Remove the nicks, scratches, gouges, burrs and sharp edges from the repair parts and the web.
9. Apply a chemical conversion coating to the repair parts and to the bare surfaces of the web. Refer to SRM 51-10-2.
10. Apply two layers of BMS 10-11 type I primer to the repair parts and to the bare surfaces of the web. Refer to SRM 51-10-2.
11. Install the repair parts with BMS 5-95 sealant between the mating surfaces. Apply a fillet seal of BMS 5-95 sealant around the edges of the repair. Refer to SRM 51-20-4.
12. Install the tapered shim and flat filler. If they were removed in step 3. See Detail III.
13. Install the stop fitting. See Detail II.
14. Before you install the fasteners, the maximum gap permitted between parts is 0.010 inch. Install shims as necessary for gaps that are more than 0.010 inch and are less than or equal to 0.040 inch. Contact Boeing if the shim thickness is more than 0.040 inch. Make the shims from 2024-T3 clad material. Apply chemical conversion coating and two layers of BMS 10-11 Type I primer to the shims.
15. Install the fasteners. Install hex drive bolts wet with BMS 5-95 sealant. See Detail II. Refer to SRM 51-30 and SRM 51-20-4.
16. Apply BMS 3-23, or an equivalent corrosion inhibiting compound, to the sill web and the repair area after the repair is complete. Refer to SRM 51-10-2.

NOTES

- THIS IS A CATEGORY A REPAIR. THE INSPECTIONS GIVEN IN THE BASELINE ZONAL INSPECTION (BZI) ARE SUFFICIENT TO MAINTAIN THE DAMAGE TOLERANCE OF THE INITIAL STRUCTURE WITH THIS REPAIR INSTALLED. REFER TO 51-00-6 FOR REPAIR CATEGORIES, BZI DEFINITION AND REPAIR ASSESSMENT INFORMATION.
- THIS REPAIR WILL NOT HAVE AN EFFECT ON THE STRUCTURALLY SIGNIFICANT ITEMS (SSI'S) GIVEN IN SRM 51-00-4, FIGURE 3. THIS REPAIR WILL NOT CREATE NEW SSI'S. THUS, NO CHANGE TO THE SUPPLEMENTAL STRUCTURAL INSPECTION DOCUMENT (SSID) INSPECTION PROGRAM IS NECESSARY AS A RESULT OF THIS REPAIR.
- D = FASTENER DIAMETER
- MACHINED SURFACES MUST HAVE A FINISH OF 125 MICROINCHES Ra OR BETTER.
- FOR THE REPAIR FASTENER LOCATION, MAKE THE FASTENER SPACING 5D TO 6D IN POSITIONS SIMILAR TO THOSE SHOWN.

Upper Sill Web Crack Repair - at Forward Airstair Door Stop
Figure 2 (Sheet 1)

BOEING PROPRIETARY - Copyright © - Unpublished Work - See title page for details.

NOTES (CONTINUED)

- WHEN YOU USE THIS REPAIR, REFER TO:
  - BAC 5602 OR MIL-H-6088 FOR HEAT TREATMENT OF ALUMINUM ALLOYS
  - SRM 51-00-06 FOR STRUCTURAL REPAIR DEFINITIONS
  - SRM 51-10-1 FOR INSPECTION AND REMOVAL OF DAMAGE
  - SRM 51-10-2 FOR PROTECTIVE TREATMENT OF METAL
  - SRM 51-20-4 FOR REPAIR SEALING PROCEDURES
  - SRM 51-20-1 FOR SHEET METAL MATERIALS
  - SRM 51-30 FOR FASTENER CODE, REMOVAL, INSTALLATION, HOLE SIZES AND EDGE MARGINS.

[A] CUT THE DAMAGED WEB AT A LOCATION WHERE YOU CAN HAVE FOUR REPAIR FASTENERS ON EACH SIDE OF THE CUT LINE.

[B] ALL LENGTH DIMENSIONS ARE GIVEN IN INCHES AND ANGLE DIMENSIONS ARE GIVEN IN DEGREES. THE DECIMAL TOLERANCES ARE ± 0.030 INCHES. THE ANGLE TOLERANCES ARE ± 2 DEGREES.

[C] YOU CAN USE THE TRIMMED WEB AS A TEMPLATE TO FIND THE LENGTH OF THE REPAIR WEB AND THE REQUIRED WIDTH OF THE SPLICE CHANNEL.

[D] PENETRANT INSPECT BEND AREAS AFTER FORMING. REFER TO SOPM 20-20-02.

FASTENER SYMBOLS

REFERENCE FASTENER LOCATION

INITIAL FASTENER LOCATION. INSTALL A BACR15BB6D UNIVERSAL HEAD RIVET.

INITIAL FASTENER LOCATION. INSTALL A BACB30MC6A HEX DRIVE BOLT WITH A BACC3BH6 COLLAR.

INITIAL FASTENER LOCATION. INSTALL A BACR15CE6D RIVET. THROUGH FLAT FILLER, TAPERED SHIM, WEB AND FRAME CHORD ONLY.

REPAIR FASTENER LOCATION. INSTALL A BACR15BB6D RIVET.

INITIAL FASTENER LOCATION. INSTALL A BACB30LM4 BOLT AND A BACN11Z4CD NUT IN THE 0.250/0.254 DIAMETER HOLE. INSTALL A BACW10BP4CD WASHER UNDER FASTENER HEAD AND BACW10BP4DP WASHER UNDER BACN11Z4CD NUT.

REPAIR MATERIAL			
PART NO.	PART	QUANTITY	MATERIAL
1	WEB	1	0.050 BARE 7075-0 SHEET AS GIVEN IN AMS-QQ-A-250/12. HEAT TREAT AFTER FORMING TO 7075-T6 AS GIVEN IN BAC 5602. SEE DETAIL IV FOR PART DIMENSIONS. [D]
2	SPLICE CHANNEL	1	0.050 BARE 7075-0 SHEET AS GIVEN IN AMS-QQ-A-250/12. HEAT TREAT AFTER FORMING TO 7075-T6 AS GIVEN IN BAC 5602. SEE DETAIL V FOR PART DIMENSIONS. [D]
3	RADIUS FILLER	1	7075-T6 EXTRUSION AS GIVEN IN AMS-QQ-A-200/11 BAC1511-3723.

TABLE I

Upper Sill Web Crack Repair - at Forward Airstair Door Stop
Figure 2 (Sheet 2)

BOEING PROPRIETARY - Copyright © - Unpublished Work - See title page for details.

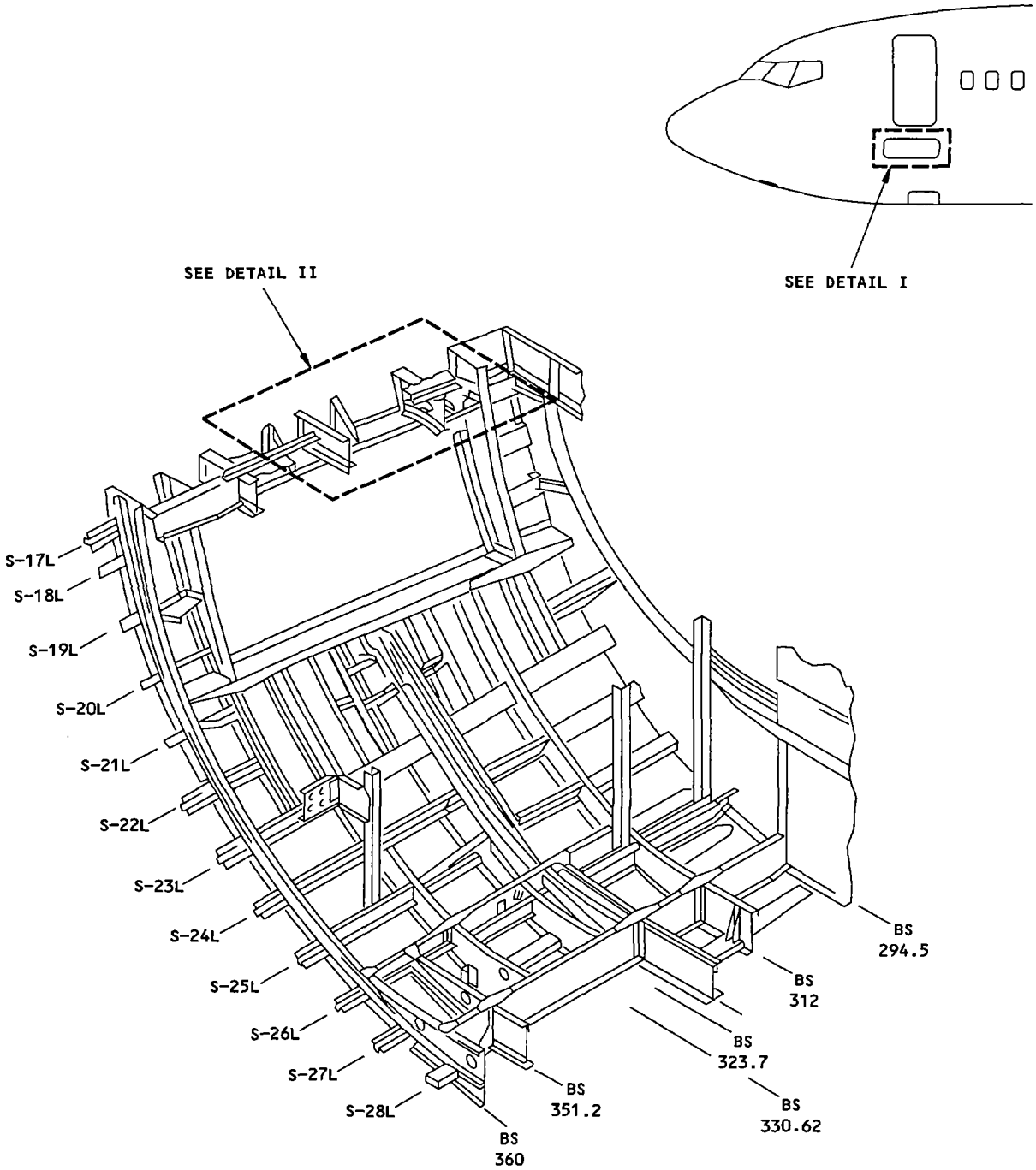

AIRSTAIR DOOR STRUCTURE VIEW, SECTION 41
DETAIL I

Upper Sill Web Crack Repair - at Forward Airstair Door Stop
Figure 2 (Sheet 3)

BOEING PROPRIETARY - Copyright © - Unpublished Work - See title page for details.

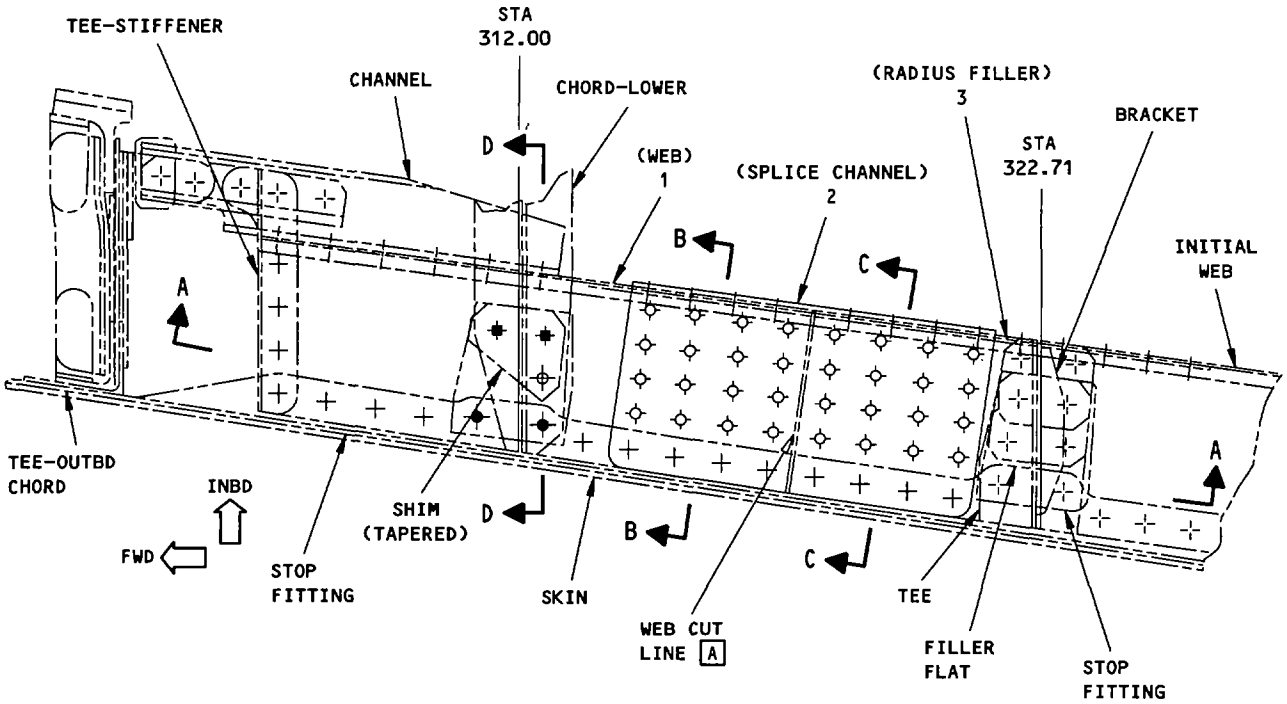

REPAIR OF THE CRACKED SILL WEB
DETAIL II

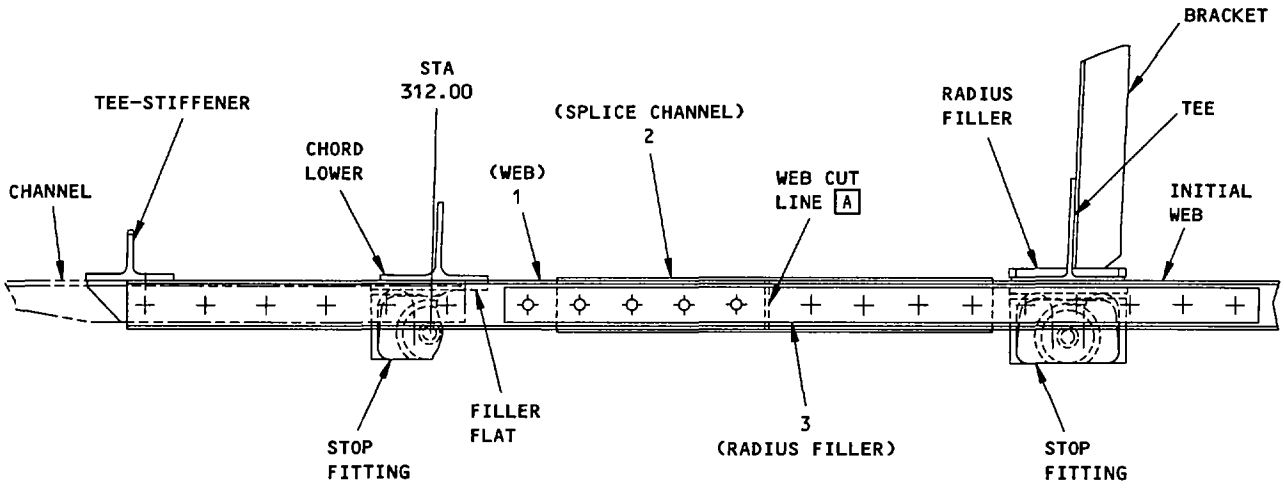

SECTION A-A

Upper Sill Web Crack Repair - at Forward Airstair Door Stop
Figure 2 (Sheet 4)

BOEING PROPRIETARY - Copyright © - Unpublished Work - See title page for details.

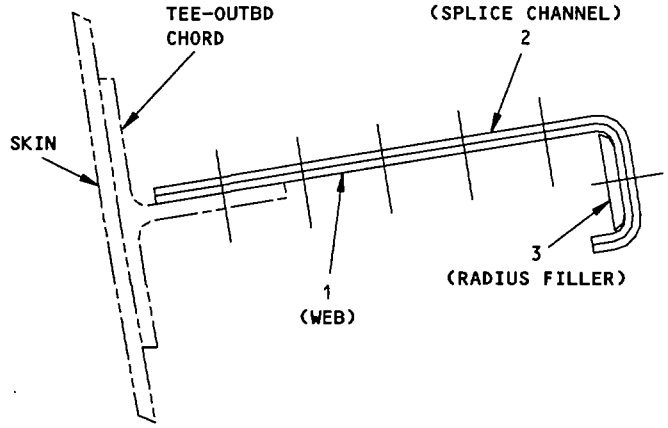

VIEW ROTATED 90° CLOCK WISE
SECTION B-B

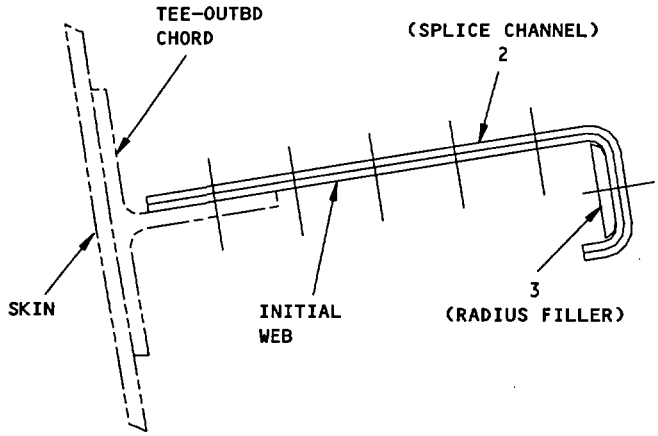

VIEW ROTATED 90° CLOCK WISE
SECTION C-C

Upper Sill Web Crack Repair - at Forward Airstair Door Stop
Figure 2 (Sheet 5)

BOEING PROPRIETARY - Copyright © - Unpublished Work - See title page for details.

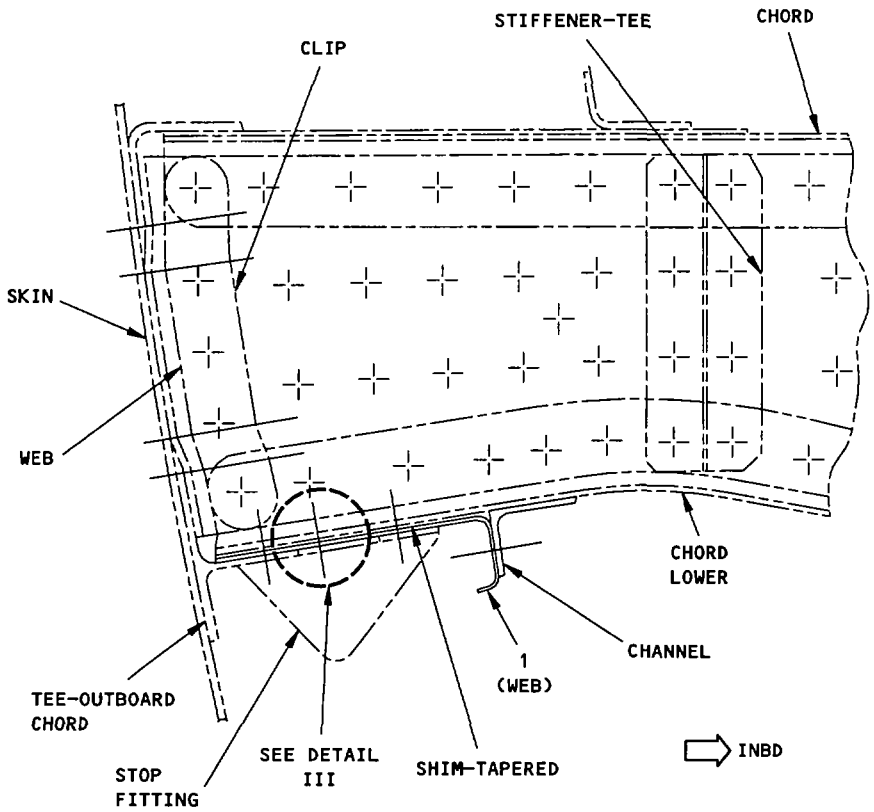

SECTION D-D

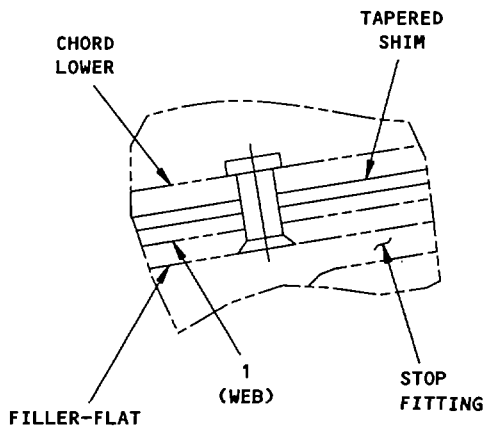

DETAIL III

Upper Sill Web Crack Repair - at Forward Airstair Door Stop
Figure 2 (Sheet 6)

BOEING PROPRIETARY - Copyright © - Unpublished Work - See title page for details.

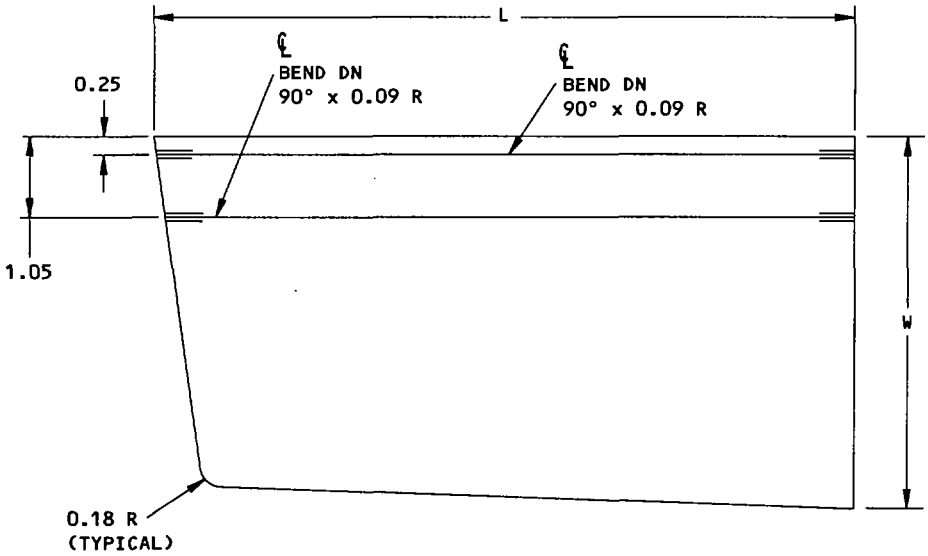

NOTE: LENGTH L AND WIDTH W AS NECESSARY

DIMENSIONS FOR PART 1 (WEB)
DETAIL IV [B] [C]

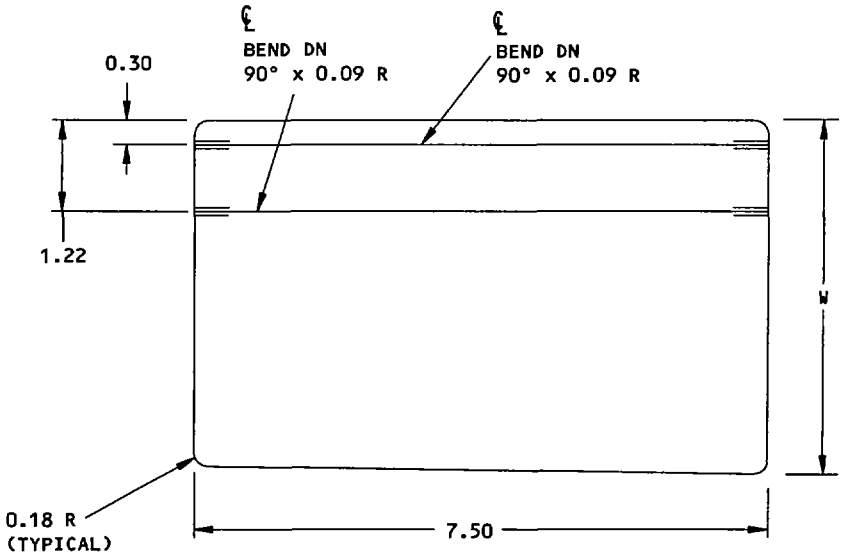

NOTE: WIDTH W AS NECESSARY

DIMENSIONS FOR PART 2 (SPLICE CHANNEL)
DETAIL V [B] [C]

Upper Sill Web Crack Repair - at Forward Airstair Door Stop
Figure 2 (Sheet 7)

BOEING PROPRIETARY - Copyright © - Unpublished Work - See title page for details.

SERVICE BULLETIN REPAIRS - BULKHEADS

The following Service Bulletins contain bulkhead repairs which are available for use where specific damage has been encountered. Usually, the Service Bulletin also covers preventive modification data which operators are encouraged to use to eliminate the need for repair.

DAMAGED AREA	CUM LINE NUMBER EFFECTIVITY [A]	SB NUMBER
FUSELAGE - STATION NUMBER 727 BULKHEAD - OUTBOARD CHORD INSPECTION AND REPLACEMENT	1 THRU 1585	737-53-1088
FUSELAGE - FRAMES - BODY STATION 727 OUTBOARD CHORD AT STRINGER 18A, INSPECTION AND PREVENTIVE MODIFICATION	1 THRU 1585	737-53A1166

[A] FOR AIRPLANES ON WHICH PREVENTIVE MODIFICATION HAS NOT BEEN ACCOMPLISHED

BOEING PROPRIETARY - Copyright © - Unpublished Work - See title page for details.

REPAIR INSTRUCTIONS

1. Open the nose radome and examine the bulkhead web for damage. Refer to SB 737-53-1173 for the inspection procedures and the removal and installation of structures that are attached.
2. See Detail I to find the repair for damage found. If the damage is located from:
   A. WL 240 to WL 230.5, do the repair as shown in Detail II. [A] [C]
   B. WL 230.5 to WL 210, do the repair as shown in Detail III. [C]
   C. WL 210 to WL 184.5, do the repair as shown in Detail IV. [B] [C]
   D. WL 198.5 to WL 184.5, do the repair as shown in Detail V. [B] [C]

   See Table I for the repair materials.
3. Remove the fasteners from the damaged web, stiffener, chord or other structure as necessary. Remove channels and angle stiffeners, supports, latches or clips as necessary.
4. Cut out the damaged area. See Procedure I. As an alternate procedure for a crack that is 1.0 inch or less in length, stop drill the end of the crack. See Procedure II.

   NOTE: If there are more than one crack in a given area, do not stop drill, but cut out the cracks.

   To protect the structure below the skin, put a thin steel sheet between the web and the structure below it.
5. Make the repair parts. Refer to Table I. If you cut out the damage, make a part 2 filler.
6. Assemble the repair parts and drill the fastener holes.
7. Disassemble the repair parts.
8. Remove the nicks, scratches, gouges, burrs, and sharp edges from the repair parts and the web.
9. Apply a chemical conversion coating to the repair parts and the the stop drill hole or the bare surfaces of the web. Refer to SRM 51-10-2.
10. Apply one layer of BMS 10-11, Type I primer to the repair parts and to the stop drill hole or the bare surfaces of the web. Refer to SOPM 20-41-02.
11. Install repair washers in countersink holes. Refer to SRM 51-30-8.
12. Install the repair parts with BMS 5-95 sealant between the mating surfaces.
13. Install the fasteners. Fasteners that are not made of aluminum must be installed wet with BMS 5-95 sealant in transition fit holes.
14. Apply the one layer of BMS 10-11, Type 2 enamel to the repair area.
15. Close the nose radome.

PROCEDURE I

1. Cut out the minimum amount of material necessary to remove the damage.

   NOTE: Make a radius that is a minimum of 0.38 inch at each corner of the cutout. Make sure to keep an edge margin to a minimum of 1.7 times the diameter of the fastener.
2. Do an HFEC test along the cutout to make sure there are no cracks. Refer to NDT Part 6, 51-00-00.
3. If there are no cracks, make the cutout larger by 0.04 inch. The cutout must have a minimum radius of 0.38. Make sure that fasteners in the cutout area have a minimum edge margin of 1.7D.

PROCEDURE II

A. If a crack does not stop in a fastener hole, stop drill the crack:
   1. Stop drill the crack a diameter of 0.25 inch. Refer to SRM 51-10-1.
   2. Do a high frequency eddy current (HFEC) test to the hole. Make sure there is no crack on the side of the hole opposite the crack.
   3. If there is a crack, make the hole larger by 1/16 inch and do the HFEC test again. When there is no crack, make the hole larger by 1/16 inch.

B. If a crack ends in a fastener hole, oversize the hole in the structure that has a crack only:
   1. Do a high frequency eddy current (HFEC) inspection of the hole. Make sure there is no crack on the side of the hole opposite the crack.
      - If there is no crack on the opposite side of the hole, install a 1/16 inch oversize fastener. Make sure to keep an edge margin to a minimum of 1.7 times the diameter of the fastener.
      - If there is a crack on the opposite side of the hole, cut out the crack as given in Procedure I.

BS 178 Bulkhead - Web Repairs
Figure 1 (Sheet 1)

BOEING PROPRIETARY - Copyright © - Unpublished Work - See title page for details.

NOTES

- A DAMAGE TOLERANCE ASSESSMENT IS NOT NECESSARY FOR FLAT PRESSURE BULKHEAD WEB REPAIRS IF EXTERNAL GENERAL VISUAL (SURVEILLANCE) INSPECTION INTERVALS ARE NOT MORE THAN 8,000 FLIGHT CYCLES. THUS, THESE WEB REPAIRS ARE NOT SUBJECT TO THE REPAIR ASSESSMENT PROGRAM SPECIFIED IN SRM 51-00-6.
- THESE REPAIRS WILL NOT HAVE AN EFFECT ON THE STRUCTURALLY SIGNIFICANT ITEMS GIVEN IN SRM 51-00-4, FIGURE 3. THUS, NO CHANGE TO THE SUPPLEMENTAL STRUCTURAL INSPECTION DOCUMENT (SSID) INSPECTION PROGRAM IS NECESSARY.
- D = THE FASTENER DIAMETER
- ALL DIMENSIONS ARE IN INCHES, UNLESS GIVEN DIFFERENTLY.
- SEE TABLE III FOR AN OVERSIZE FASTENER.
- FOR THE REPAIR FASTENER LOCATIONS, USE THE SAME FASTENER SPACING USED IN ADJACENT STRUCTURE SUCH AS STRINGERS AND CHORDS. FASTENER SPACING MUST BE 4D TO 6D. SEE THE APPLICABLE REPAIR DETAIL.
- USE SHIMS, FILLERS OR TAPERED FILLERS SO THAT CLEARANCE BETWEEN PARTS IS NOT LARGER THAN 0.010 INCH BEFORE FASTENER INSTALLATION.
- SURFACES THAT ARE MACHINED MUST HAVE A FINISH OF 125 MICROINCHES R_a, UNLESS A DIFFERENT FINISH IS SPECIFIED.
- ALL OF THE CORNERS AND CUTOUTS MUST HAVE A MINIMUM RADIUS OF 0.38 INCH.
- FOR ALL REPAIRS SHOWN IN THIS FIGURE:
  - THERE MUST BE A MINIMUM OF TWO ROWS OF FASTENERS ON EACH SIDE OF A CUTOUT OR STOP DRILL HOLE, THROUGH THE REPAIR DOUBLER, IN THE HORIZONTAL DIRECTION.
  - THERE MUST BE A MINIMUM OF TWO ROWS OF FASTENERS ON EACH SIDE OF A CUTOUT OR STOP DRILL HOLE, THROUGH THE REPAIR DOUBLER, IN THE VERTICAL DIRECTION.
- EDGE MARGINS MUST BE A MINIMUM OF 1.7D IN REPAIR PARTS AND IN THE INITIAL STRUCTURE, UNLESS GIVEN DIFFERENTLY.
- WHEN YOU USE THIS REPAIR REFER TO:
  - NDT PART 6, 51-00-00 FOR EDDY CURRENT INSPECTION OF THE FUSELAGE SKIN
  - NDT PART 6, 53-30-00 FOR EDDY CURRENT INSPECTION OF FASTENER HOLES IN THE FUSELAGE SKIN
  - SOPM 20-41-02 FOR APPLICATION OF CHEMICAL AND SOLVENT RESISTANT FINISHES
  - SRM 51-00-6 FOR STRUCTURAL REPAIR DEFINITIONS
  - SRM 51-10-1 FOR INSPECTION AND REMOVAL OF DAMAGE
  - SRM 51-10-2 FOR PROTECTIVE TREATMENT OF METALLIC AND GRAPHITE MATERIALS
  - SRM 51-20-4 FOR REPAIR SEALING
  - SRM 51-30 FOR FASTENER CODE, REMOVAL, INSTALLATION, HOLE SIZES AND EDGE MARGINS
  - SRM 51-30-8 FOR COUNTERSINKING AND USE OF COUNTERSINK REPAIR WASHERS
  - SRM 51-70 FOR AERODYNAMIC SMOOTHNESS.

A YOU CAN INSTALL BLIND BOLTS IN DETAIL II ONLY. EXAMINE THE BLIND BOLTS 3,000 FLIGHT CYCLES AFTER INSTALLATION, AND EACH 2,500 FLIGHT CYCLES AFTER THAT. IT IS RECOMMENDED THAT THE BLIND FASTENER REPAIR BE REPLACED WITH A SOLID FASTENER REPAIR BY THE SUBSEQUENT OVERHAUL. THE BLIND FASTENER REPAIR MUST BE REPLACED WITH A SOLID FASTENER REPAIR 10,000 FLIGHT CYCLES OR LESS AFTER THE INITIAL INSTALLATION. FOR THE BLIND FASTENERS AND THE SOLID REPLACEMENT FASTENERS, SEE TABLE II.

WHEN YOU INSTALL THE BLIND FASTENER REPAIR, MAKE SURE:

- THE BLIND FASTENERS ARE CORRECTLY INSTALLED ON THE INTERNAL STRUCTURE
- SUFFICIENT FASTENER SPACING AND EDGE MARGINS ARE KEPT.

B IF IT IS NECESSARY TO REMOVE PARTS AFT OF THE WEB AREA BELOW WL208, REFER TO SB 737-53-1173.

C IF THERE IS DAMAGE THAT IS NOT IN THE AREA OF A LOCAL DOUBLER SHOWN IN DETAIL I, DO ONE OF THESE PROCEDURES:

- INSTALL A CONTINUOUS DOUBLER. SEE DETAIL I
- GO TO THE BOEING COMPANY FOR REPAIR INSTRUCTIONS.

YOU CAN ALSO INSTALL A CONTINUOUS DOUBLER AS AN OPTION TO PREVENT CRACKS IN AREAS OUTSIDE LOCAL DOUBLERS. IT IS PERMITTED TO ADD TWO CONTINUOUS DOUBLERS.

D MAKE THE FILLER THE SAME SHAPE AS THE CUTOUT AND THE SAME GAGE AS THE BULKHEAD WEB.

E INSTALL A BACB30FM6 HEX DRIVE BOLT WITH A BACC30M6 COLLAR:

- IF THE INITIAL FASTENER IS A LOCKBOLT
- TO ATTACH AN ANTENNA MOUNT.

BS 178 Bulkhead - Web Repairs
Figure 1 (Sheet 2)

E65145

BOEING PROPRIETARY - Copyright © - Unpublished Work - See title page for details.

NOTES (CONTINUED)

[F] IF THERE IS DAMAGE BELOW THIS STRUCTURE, DO AS FOLLOWS:

- REMOVE THE STRUCTURE
- REMOVE THE DAMAGE
- GO TO THE BOEING COMPANY FOR REPAIR INSTRUCTIONS.

[G] CUT AND REMOVE THE 0.032 INCH STRAP TO PERMIT THE CUT OUT OF A CRACK. REPLACE THE STRAP WITH A NEW STRAP MADE FROM 0.032 INCH THICK 7075-T6 MATERIAL. SPLICE THE PART 1 DOUBLER A MINIMUM OF 6 FASTENERS ABOVE AND BELOW THE STRAP.

[H] INSTALL HEX DRIVE BOLTS IN TRANSITION FIT HOLES. OVERSIZE THE HOLE AS NECESSARY. KEEP A MINIMUM EDGE MARGIN OF 1.7D.

FASTENER SYMBOLS

REFERENCE FASTENER LOCATION

INITIAL FASTENER LOCATION
INSTALL A BACB30FM6 HEX DRIVE BOLT WITH A BACC30M COLLAR. [H]

INITIAL FASTENER LOCATION
INSTALL A BACB30FP6 HEX DRIVE BOLT WITH A BACC30M COLLAR. [H]

REPAIR FASTENER LOCATION
INSTALL A BACB30FM6 HEX DRIVE BOLT WITH A BACC30M COLLAR. AS AN ALTERNATIVE, INSTALL A BACR15BB6D PROTRUDING HEAD RIVET.

REPAIR FASTENER LOCATION
INSTALL A BACB30AU5 BLIND BOLT. AS AN ALTERNATIVE, INSTALL AN MS90354U BLIND RIVET. [A]

REPAIR MATERIAL			
PART		QTY	MATERIAL
1	DOUBLER	1	0.050 2024-T3 CLAD
2	FILLER	AS NECESSARY	[D]
3	FILLER	AS NECESSARY	0.032 2024-T3 CLAD

TABLE I

REPAIR AND REPLACEMENT FASTENERS		
SOLID FASTENER (PREFERRED REPAIR)	BLIND FASTENER (ALTERNATIVE REPAIR) FOR DETAIL II ONLY	SOLID FASTENER (TO REPLACE AN ALTERNATIVE REPAIR)
BACB30FM6 HEX DRIVE BOLT WITH A BACC30M COLLAR	MS21141-06 BLIND BOLT	BACB30KK6 HEX DRIVE BOLT WITH A BACC30M COLLAR
BACB30FM5 HEX DRIVE BOLT WITH A BACC30M COLLAR	MS21141-05 BLIND BOLT	BACB30FM6 HEX DRIVE BOLT WITH A BACC30M COLLAR
BACB30FP6 HEX DRIVE BOLT WITH A BACC30M COLLAR	MS21141-06 BLIND BOLT	BACB30KK6 HEX DRIVE BOLT WITH A BACC30R COLLAR

TABLE II

OVERSIZE REPLACEMENT FASTENERS	
REPAIR FASTENER	OVERSIZE FASTENER
BACR15BB5 RIVET	BACR15ET()D RIVET
BACB30FM() HEX DRIVE BOLT WITH A BACC30M COLLAR	BACB30KK()A HEX DRIVE BOLT WITH A BACC30R COLLAR
BACB30FP() HEX DRIVE BOLT WITH A BACC30M COLLAR	BACB30KK()A HEX DRIVE BOLT WITH A BACC30R COLLAR
BACB30AU() BLIND BOLT	BACB30VH() BLIND BOLT

TABLE III

BS 178 Bulkhead - Web Repairs
Figure 1 (Sheet 3)

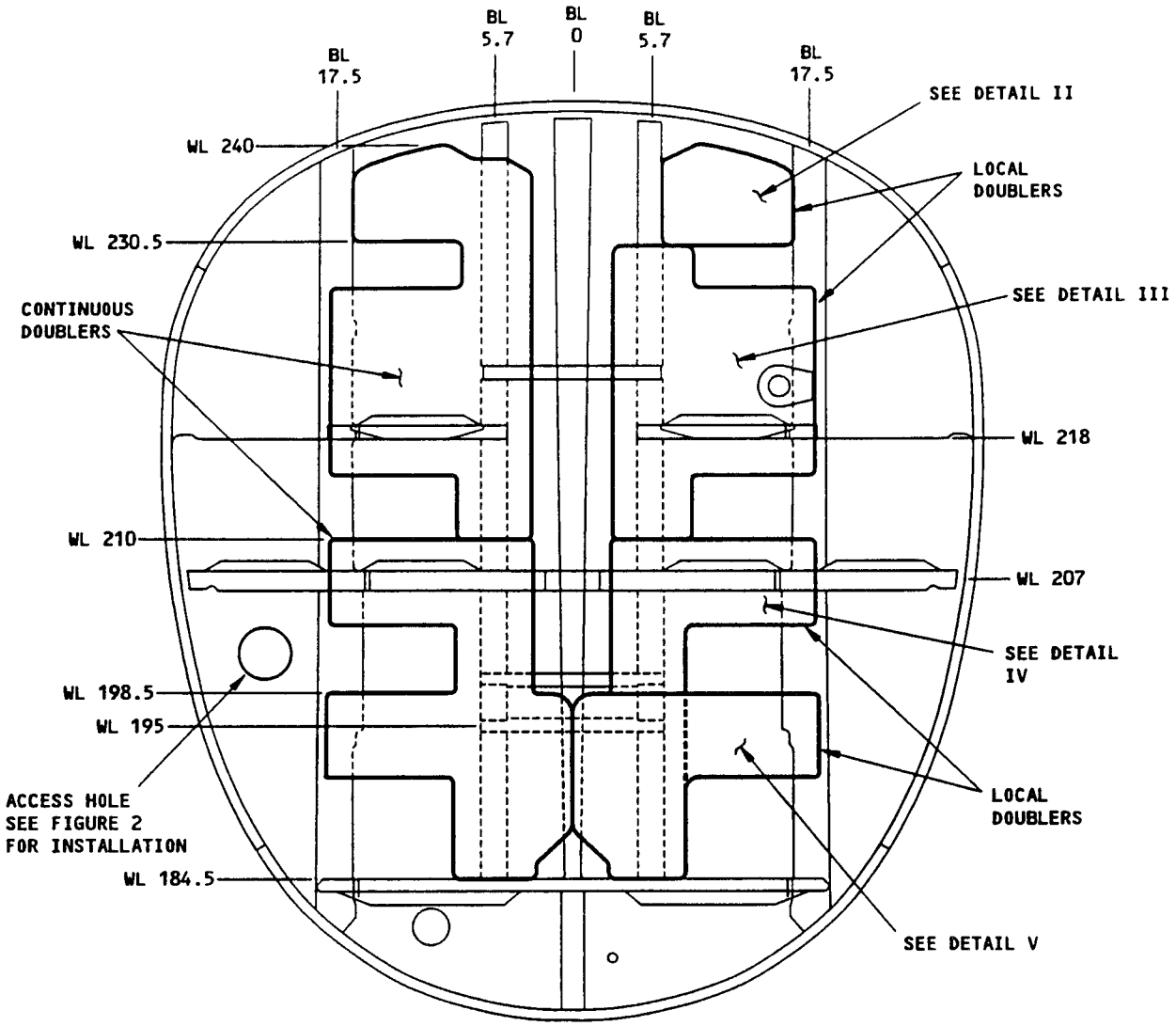

BS 178 BULKHEAD - FORWARD VIEW
(REPAIR OF FREQUENT DAMAGE AREAS SHOWN)
DETAIL I [C]

BS 178 Bulkhead - Web Repairs
Figure 1 (Sheet 4)

E65156

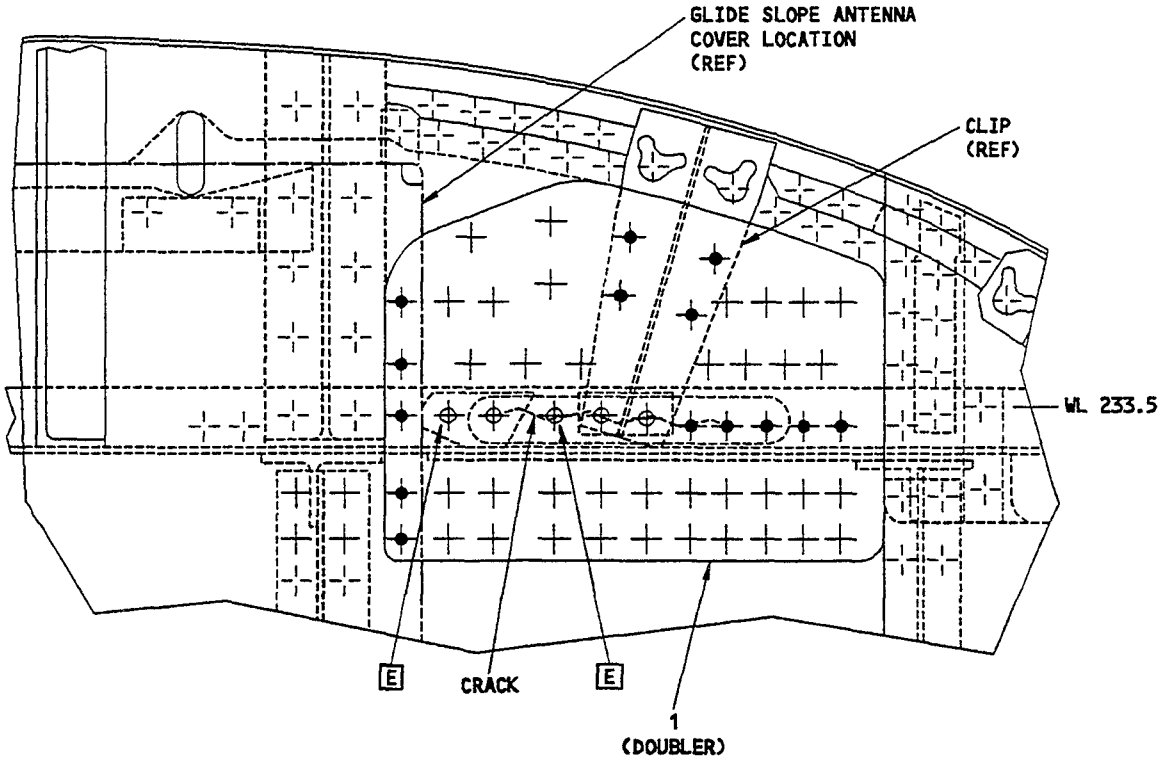

INSTALLATION OF A REPAIR FOR THE AREA BETWEEN WL 240 AND WL 230.5
(FRONT VIEW OF THE LEFT SIDE IS SHOWN, RIGHT SIDE IS ALMOST THE SAME)
DETAIL II

BS 178 Bulkhead Web Repairs
Figure 1 (Sheet 5)

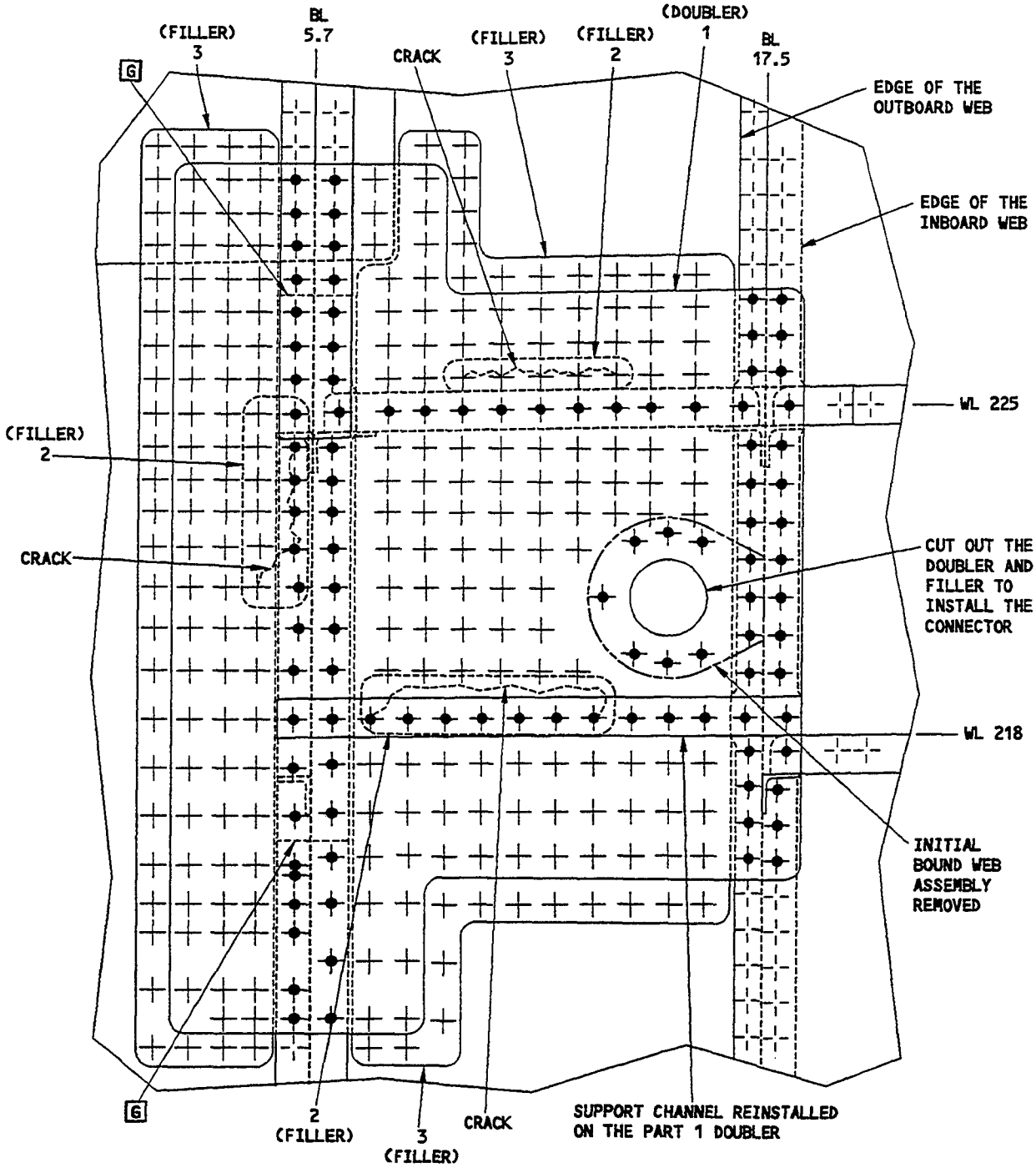

INSTALLATION OF A REPAIR FOR THE AREA BETWEEN WL 230.5 AND WL 210
(FRONT VIEW OF LEFT SIDE IS SHOWN, RIGHT SIDE IS ALMOST THE SAME)
DETAIL III

BS 178 Bulkhead - Web Repairs
Figure 1 (Sheet 6)

E65177

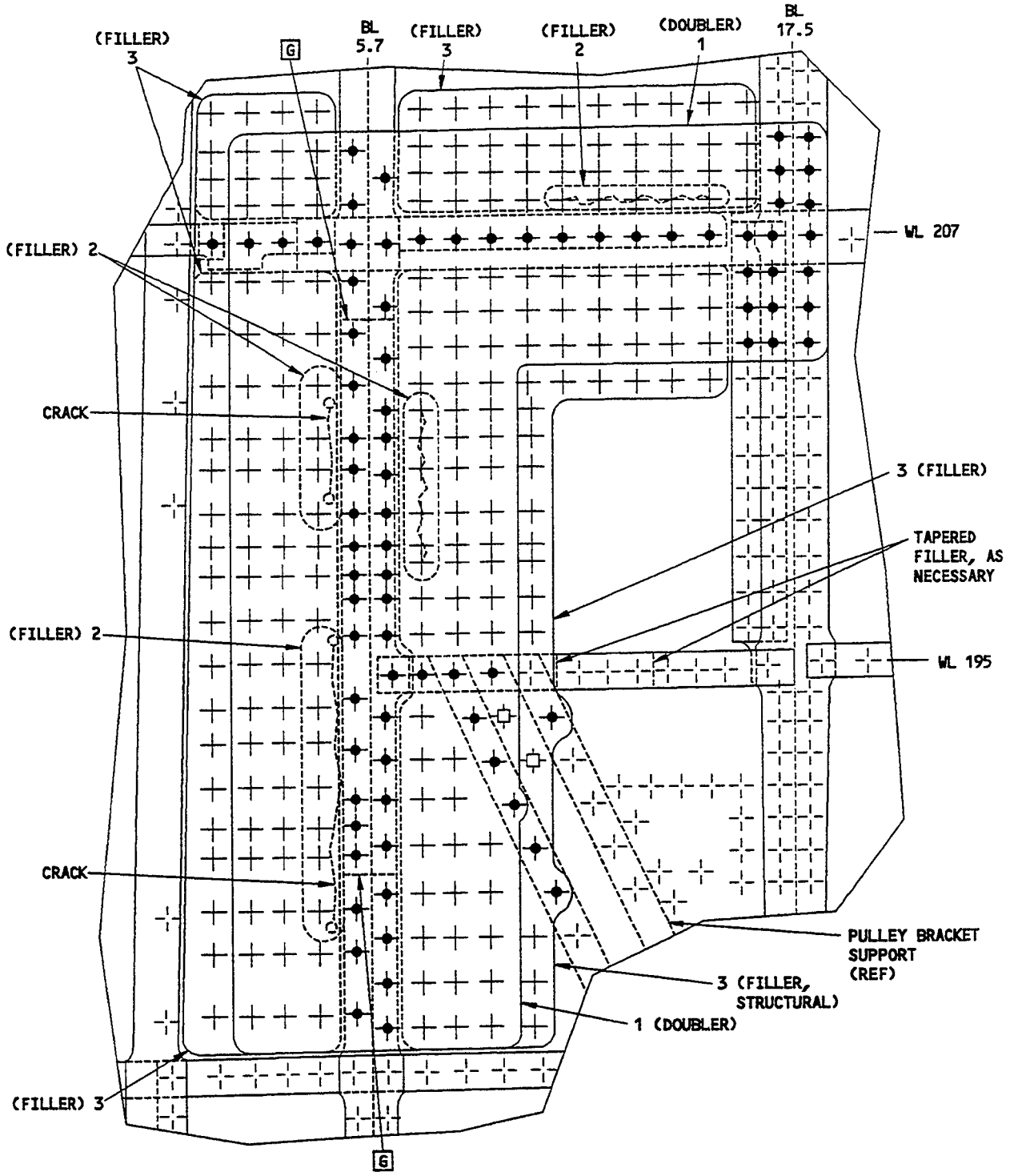

INSTALLATION OF A PREFERRED REPAIR FOR THE AREA BETWEEN WL 210 AND WL 184.5
(FRONT VIEW OF THE LEFT SIDE IS SHOWN, THE RIGHT SIDE IS ALMOST THE SAME)
DETAIL IV

BS 178 Bulkhead - Web Repairs
Figure 1 (Sheet 7)

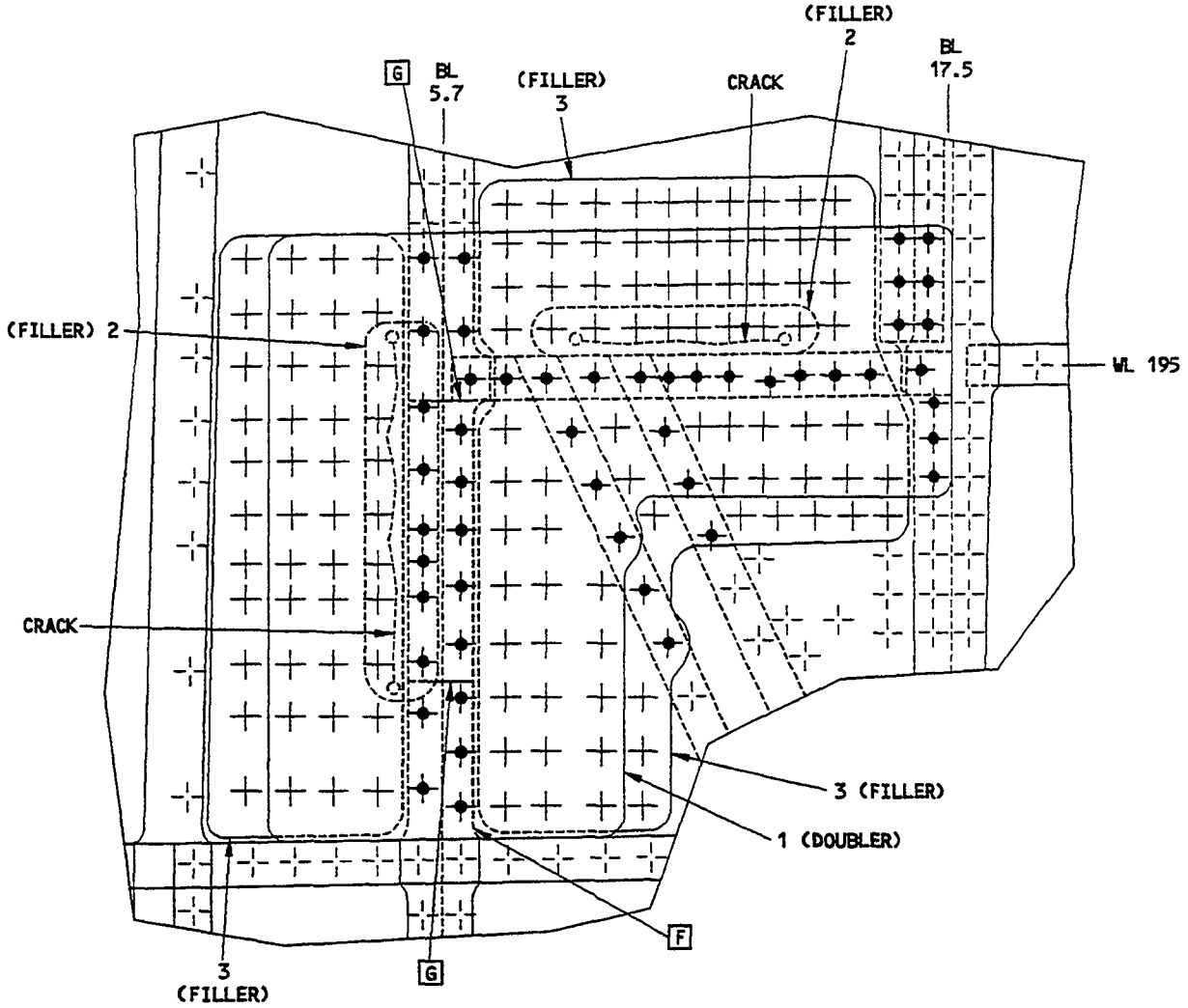

INSTALLATION OF A REPAIR FOR THE AREA BETWEEN WL 198 AND WL 184
(FRONT VIEW OF THE LEFT SIDE IS SHOWN, THE RIGHT SIDE IS ALMOST THE SAME)
DETAIL V

BS 178 Bulkhead - Web Repairs
Figure 1 (Sheet 8)

E65199

APPLICABILITY
INSTALLATION OF THIS ACCESS HOLE PERMITS THE INSPECTION AND REPAIR OF STRUCTURE ATTACHED TO THE FUSELAGE SKIN AT WL 195.

REPAIR INSTRUCTIONS

1. Open the nose radome to get access to the bulkhead.
2. Make the access hole. If there is an initial access hole in this area, remove the doubler at that hole. If there is no initial access hole, do the steps that follow:
   - Find a center for the new access hole (reference center: WL 198.7 and BL 21.0)
   - Make a circular mark with a radius of 2.0 inches from the center
   - Cut a smooth, circular hole in the web as shown in Detail I or Detail II
   - Remove the nicks, scratches, gouges, burrs, and sharp edges from the web.
3. Remove the stiffener located at WL 195, the seal retainer, and the radome prop bracket.
4. After you do the necessary inspection or repair to the structure in the access hole area, make the repair parts. See Table I.
5. Install the repair parts and drill the fastener holes. Drill 0.203 to 0.207 diameter, class 1 holes in the part 2 cover plate. Countersink the part 1 doubler where necessary. See Details I and II.
6. Remove the repair parts.
7. Remove the nicks, scratches, gouges, burrs, and sharp edges from the repair parts.
8. Apply a chemical conversion coating to the repair parts and the bare edges of the initial structure. Refer to SRM 51-10-2.
9. Apply one layer of BMS 10-11, Type I primer to the repair parts and to the bare edges of the initial structure. Refer to SOPM 20-41-02.
10. Put the part 1 doubler in position with BMS 5-95 sealant between the mating surfaces.
11. Put the WL 195 stiffener in position with BMS 5-95 sealant between the mating surfaces.
12. Install the fasteners at the ⊙ and the ■ locations. Install these fasteners wet with BMS 5-95 sealant in transition fit holes.
13. Put the seal retainer in position (for Repair I only) with BMS 5-95 sealant between the mating surfaces.
14. Install the fasteners at the ◆, +, ⊕ and ▲ locations.
15. Install the BACN10JY3 nutplates on the aft face of the bulkhead web. Install these nutplates in the positions given in Detail III. Install with MS20426AD3 rivets.
16. Put the radome prop bracket in position with BMS 5-95 sealant between the mating surfaces.
17. Install the bolts and the nuts at the ⊡ locations. Install these bolts wet with BMS 5-95 sealant.
18. Put the part 2 cover plate in position with BMS 5-95 sealant between the mating surfaces.
19. Put BMS 3-24 grease on the part of the bolt shank that does not have threads (for the bolt at each △ location).
20. Install the bolts and the washers at the △ locations. Torque the bolts to 25 to 35 inch-pounds.
21. Apply one layer of BMS 10-11, Type I primer to the repair area.
22. Apply one layer of BMS 10-11, Type II enamel to the repair area.
23. Close the nose radome.

Section 41 Bulkhead Access Hole Installation
with a Cover Plate - Body Station 178
Figure 2 (Sheet 1)

NOTES

- A DAMAGE TOLERANCE ASSESSMENT IS NOT NECESSARY FOR FLAT PRESSURE BULKHEAD WEB REPAIRS IF EXTERNAL GENERAL VISUAL (SURVEILLANCE) INSPECTION INTERVALS ARE NOT MORE THAN 8,000 FLIGHT CYCLES. THUS, THESE WEB REPAIRS ARE NOT SUBJECT TO THE REPAIR ASSESSMENT PROGRAM SPECIFIED IN SRM 51-00-6.
- THESE REPAIRS WILL NOT HAVE AN EFFECT ON THE STRUCTURALLY SIGNIFICANT ITEMS GIVEN IN SRM 51-00-4, FIGURE 3. THUS, NO CHANGE TO THE SUPPLEMENTAL STRUCTURAL INSPECTION DOCUMENT (SSID) INSPECTION PROGRAM IS NECESSARY.
- D = THE DIAMETER OF THE FASTENER
- ALL DIMENSIONS ARE IN INCHES, UNLESS DIFFERENTLY SPECIFIED
- EDGE MARGINS MUST BE A MINIMUM OF 1.7D IN THE REPAIR PARTS, UNLESS DIFFERENTLY SPECIFIED
- SURFACES THAT ARE MACHINED MUST HAVE A FINISH OF 125 MICROINCHES R_a, UNLESS A DIFFERENT FINISH IS SPECIFIED

  ALL CORNERS MUST HAVE A MINIMUM RADIUS OF 0.5 INCH
- KEEP A 4D TO 6D DISTANCE BETWEEN REPAIR FASTENERS
- THIS INSTALLATION IS APPLICABLE TO THE LEFT SIDE AND THE RIGHT SIDE OF THE AIRPLANE.
- WHEN YOU USE THIS REPAIR, REFER TO:
  - AMM 51-21 FOR INTERIOR AND EXTERIOR FINISHES
  - AMM 51-31 FOR SEALS AND SEALING
  - BAC 5602 OR MIL-H-6088 FOR HEAT TREATMENT OF ALUMINUM ALLOYS
  - SOPM 20-20-02 FOR PENETRANT INSPECION
  - SOPM 20-41-02 FOR APPLICATION OF CHEMICAL AND SOLVENT RESISTANT FINISHES
  - SRM 51-10-1 FOR INSPECTION AND REMOVAL OF DAMAGE
  - SRM 51-10-2 FOR PROTECTIVE TREATMENT OF METALLIC AND GRAPHITE MATERIALS
  - SRM 51-20-4 FOR REPAIR SEALING
  - SRM 51-20-1 FOR FORMING OF SHEET METAL MATERIALS
  - SRM 51-30 FOR FASTENER CODE, INSTALLATION AND REMOVAL, HOLE SIZES, EDGE MARGINS, AND TORQUE VALUES
  - SRM 51-30-8 FOR COUNTERSINKING AND USE OF COUNTERSINK REPAIR WASHERS.

[A] INSTALL REPAIR I OR REPAIR II.

[B] BEND THIS PART OF THE REPAIR DOUBLER TO A SHAPE THAT IS ALMOST THE SAME SHAPE AS THE SEAL RETAINER. REFER TO SRM 51-20-1. ADJUST THE BEND IF NECESSARY UNTIL YOU GET THE CORRECT RADOME FIT AND KEEP THE SEAL IN THE CORRECT POSITION.

[C] INSTALL THE SEAL RETAINER ON THE REPAIR DOUBLER. MAKE SURE THAT YOU GET THE CORRECT RADOME FIT. MAKE SURE THAT YOU KEEP THE SEAL IN THE CORRECT POSITION.

[D] FOR REPAIR II, BEND THE REPAIR DOUBLER AS GIVEN IN NOTE [B] BEFORE YOU HEAT TREAT THE DOUBLER. FOR REPAIR I AND REPAIR II, HEAT TREAT THE DOUBLER TO THE -T3 CONDITION BEFORE YOU INSTALL THE DOUBLER. REFER TO BAC5602 OR MIL-H-6088.

[E] AS AN ALTERNATIVE FOR REPAIR I, YOU CAN USE 0.063 THICK 2024-T3 CLAD SHEET TO MAKE THE REPAIR DOUBLER.

[F] AS AN ALTERNATIVE FOR REPAIR II, YOU CAN FORM THE REPAIR DOUBLER (SEE NOTE [B]) IN THE 2024-T3 CONDITION AS GIVEN IN SRM 51-20-1. AFTER YOU FORM THE DOUBLER, DO A DYE PENETRANT INSPECTION OF THE BEND RADIUS AS GIVEN IN SOPM 20-20-02. IF YOU FIND A CRACK IN THE BEND RADIUS, DISCARD THE DOUBLER AND MAKE ANOTHER REPAIR DOUBLER.

Section 41 Bulkhead Access Hole Installation
with a Cover Plate - Body Station 178
Figure 2 (Sheet 2)

BOEING PROPRIETARY - Copyright © - Unpublished Work - See title page for details.

FASTENER SYMBOLS

- REFERENCE FASTENER LOCATION.
- INITIAL FASTENER LOCATION. INSTALL A BACR15FT6D RIVET. USE AN OVERSIZE RIVET (BACR15FT7D) IF NECESSARY.
- REPAIR FASTENER LOCATION. INSTALL A BACR15FT6D RIVET.
- REPAIR FASTENER LOCATION. INSTALL A BACR15CE6D RIVET THROUGH THE WEB AND DOUBLER ONLY.
- INITIAL FASTENER LOCATION. INSTALL A BACB30KK6 HEX DRIVE BOLT WITH A BACC30R COLLAR.
- INITIAL FASTENER LOCATION. INSTALL A BACB30KK8 HEX DRIVE BOLT WITH A BACC30R COLLAR.
- REPAIR FASTENER LOCATION. INSTALL A BACB30LJ3X BOLT WITH AN AN960JD10 WASHER AND A BACN10JY3 NUT.
- INITIAL FASTENER LOCATION. INSTALL A FASTENER THAT IS THE SAME TYPE AS THE INITIAL FASTENER WITH THE SAME DIAMETER.
- INITIAL FASTENER LOCATION. INSTALL A BACR15FT8D RIVET. USE A LARGER RIVET (BACR15FT9D) IF NECESSARY.

REPAIR MATERIAL			
PART		QTY	MATERIAL
1	DOUBLER	1	0.063 CLAD [D] [E] [F] 2024-0
2	COVER PLATE	1	0.063 X 5.6 DIAMETER 2024-T3 CLAD

TABLE I

Section 41 Bulkhead Access Hole Installation
with a Cover Plate - Body Station 178
Figure 2 (Sheet 3)

BOEING PROPRIETARY - Copyright © - Unpublished Work - See title page for details.

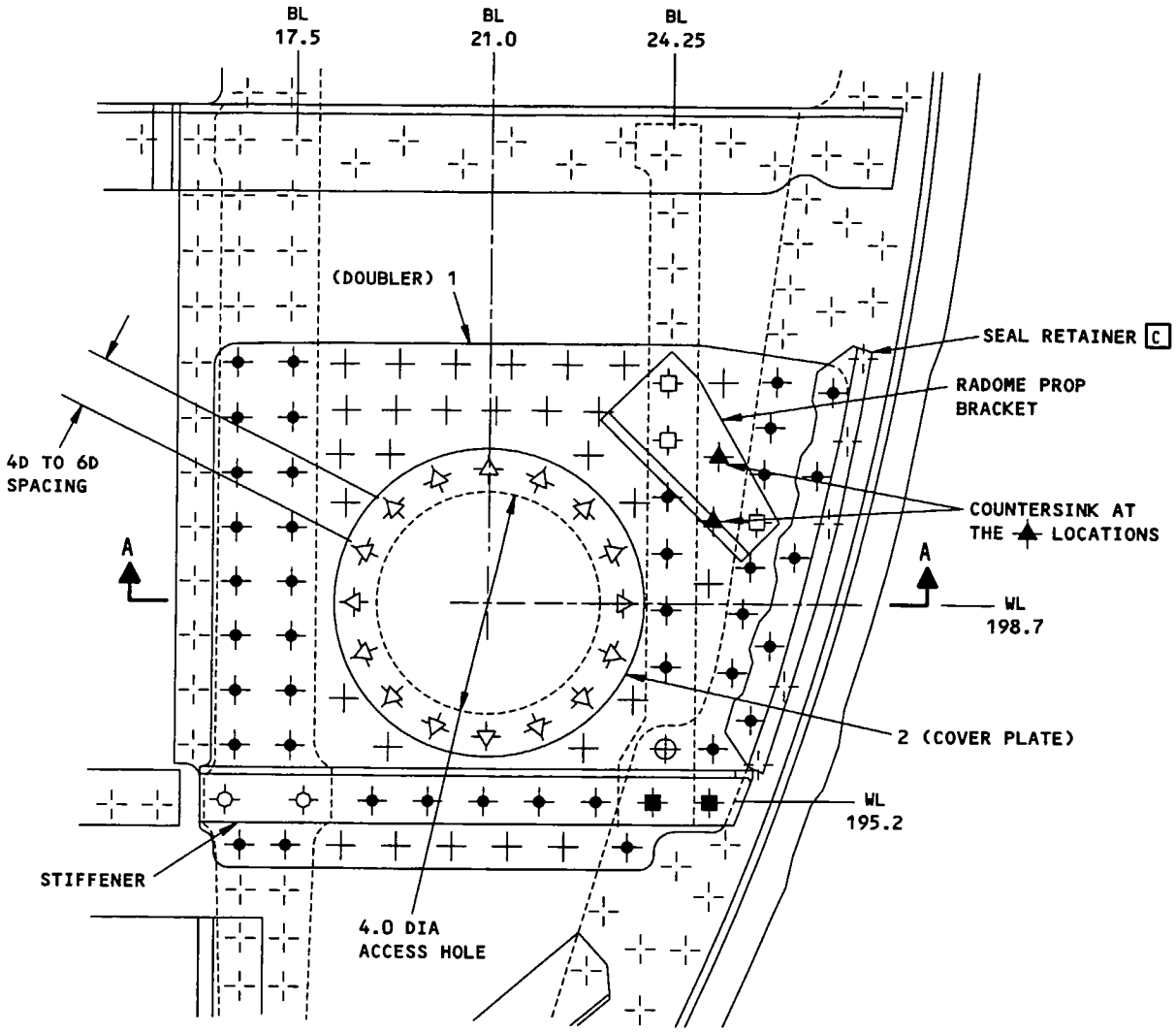

REPAIR I A
FRONT VIEW
DETAIL I

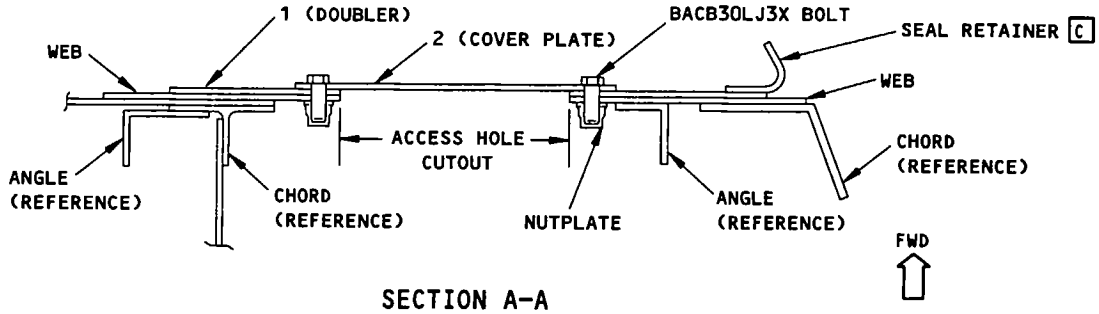

SECTION A-A

Section 41 Bulkhead Access Hole Installation
with a Cover Plate - Body Station 178
Figure 2 (Sheet 4)

BOEING PROPRIETARY - Copyright © - Unpublished Work - See title page for details.

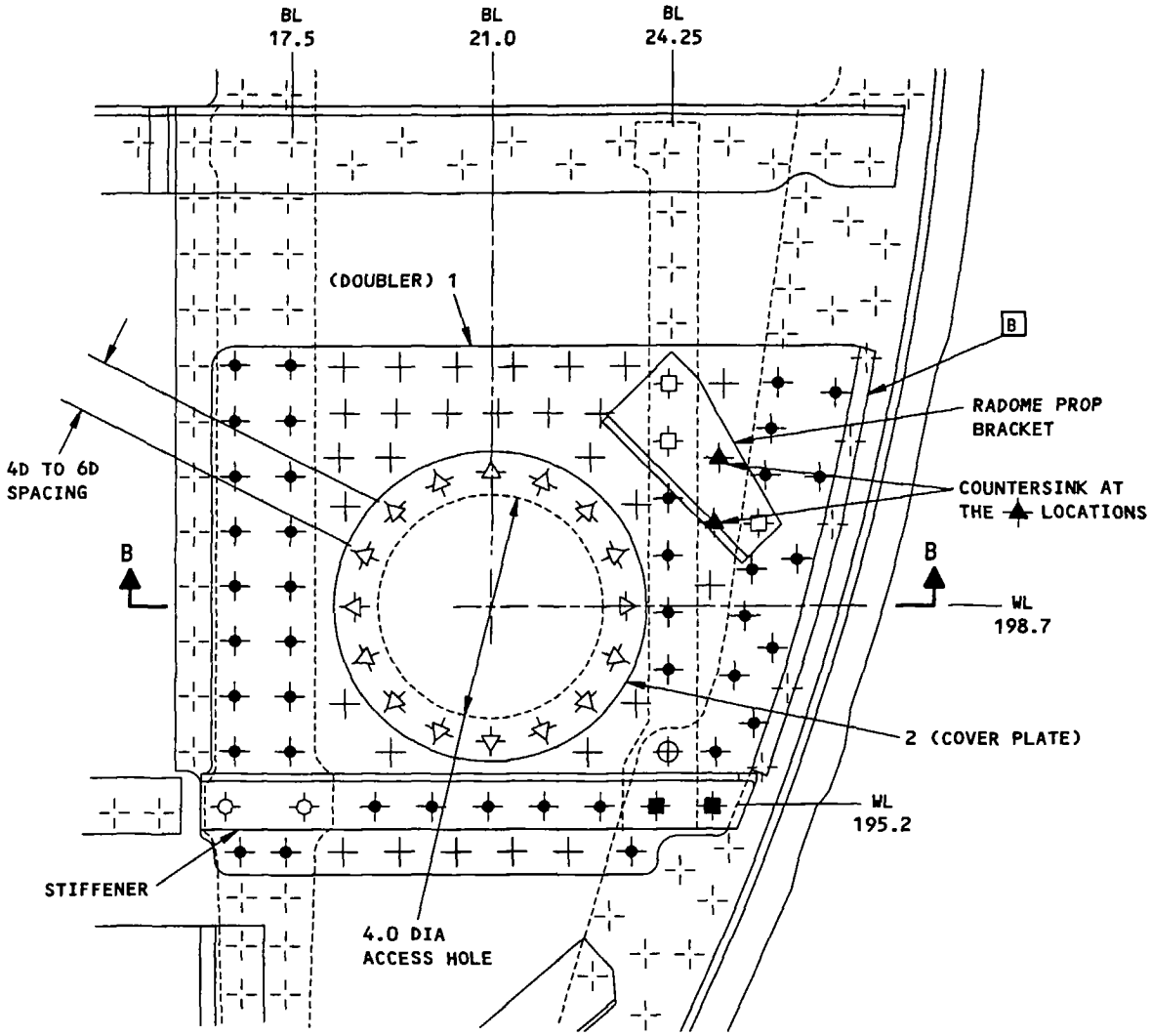

REPAIR II A
FRONT VIEW
DETAIL II

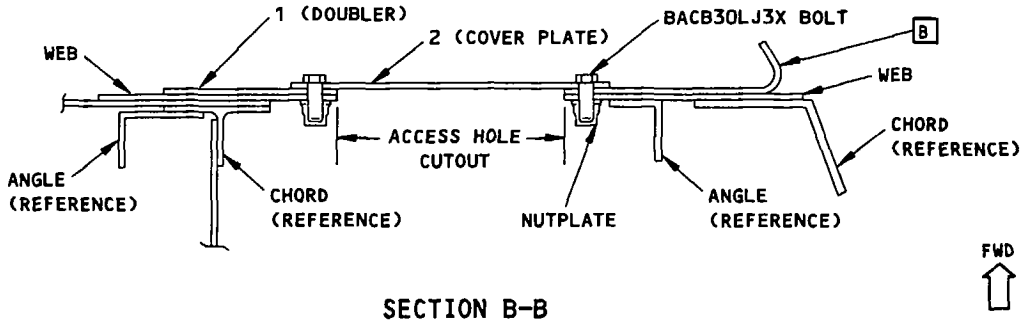

SECTION B-B

Section 41 Bulkhead Access Hole Installation
with a Cover Plate - Body Station 178
Figure 2 (Sheet 5)

BOEING PROPRIETARY - Copyright © - Unpublished Work - See title page for details.

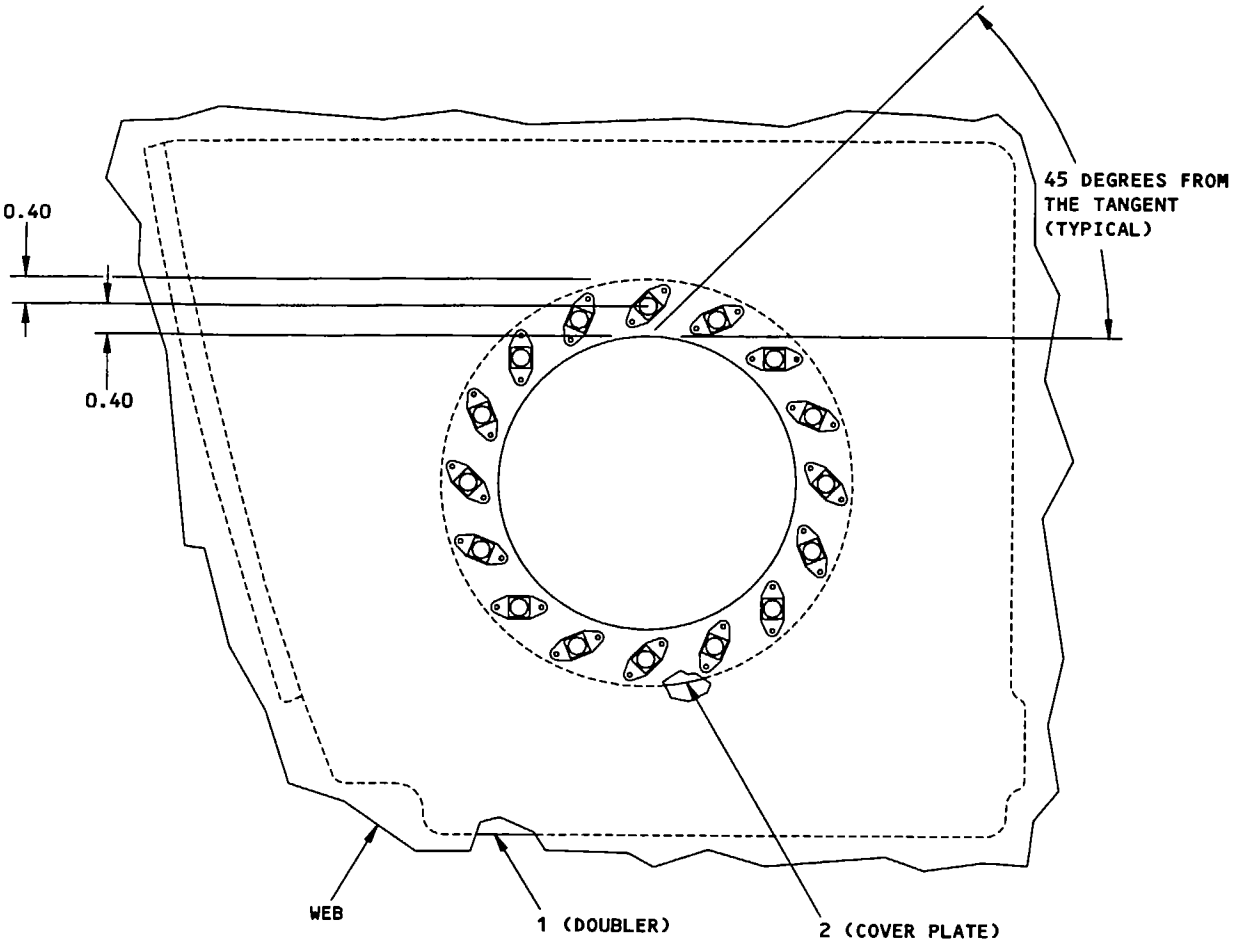

LOCATIONS OF NUTPLATES FOR COVER PLATE INSTALLATION
REAR VIEW
DETAIL III

Section 41 Bulkhead Access Hole Installation
with a Cover Plate - Body Station 178
Figure 2 (Sheet 6)

BOEING PROPRIETARY - Copyright © - Unpublished Work - See title page for details.

APPLICABILITY

THIS REPAIR IS APPLICABLE TO CRACKS IN THE VERTICAL FLANGES OF THE GLIDE SLOPE ANTENNA ATTACH BRACKET. THIS BRACKET ATTACHES TO THE BS 178 BULKHEAD. SEE DETAIL I. [A]

REPAIR INSTRUCTIONS

1. Get access to the repair area.
2. Cut away and discard the damaged vertical flange of the attach bracket.
3. Make the part 1 angle. See Table I Details II and III for the lower bracket and IV for the upper bracket.
4. Assemble the part 1 angle and drill the fastener holes.
5. Disassemble the part angle.
6. Remove the nicks, scratches, gouges, burrs, and sharp edges from the part 1 angle and the initial bracket.
7. Apply a chemical conversion coating to the part 1 angle and to the bare surfaces of the initial bracket. Refer to SRM 51-10-2.
8. Apply two layers of BMS 10-11, Type I primer to the part 1 angle and to the bare surfaces of the initial bracket. Refer to SOPM 20-41-02.
9. Install the part 1 angle with BMS 5-95 sealant between the mating surfaces.
10. Install the fasteners wet with BMS 5-95 sealant in transition fit holes.
11. Apply one layer of BMS 10-11, Type I primer to the repaired area. Refer to SOPM 20-41-02.

NOTES

- THIS REPAIR WILL NOT HAVE AN EFFECT ON A STRUCTURALLY SIGNIFICANT ITEM (SSI) GIVEN IN SRM 51-00-4, FIG. 3. THUS, NO CHANGE TO THE SUPPLEMENTAL STRUCTURAL INSPECTION DOCUMENT (SSID) INSPECTION PROGRAM IS NECESSARY.
- IT IS PERMITTED TO CHANGE THE DIMENSIONS OF THE PART 1 ANGLE TO FIT THE REPAIR.
- ALL DIMENSIONS ARE IN INCHES, UNLESS GIVEN DIFFERENTLY.
- D = THE FASTENER DIAMETER
- WHEN YOU USE THIS REPAIR, REFER TO THE FOLLOWING:
  - SOPM 20-41-02 FOR THE APPLICATION OF CHEMICAL AND SOLVENT RESISTANT FINISH
  - SRM 51-10-1 FOR DAMAGE CLASSIFICATION
  - SRM 51-10-2 FOR PROTECTIVE TREATMENT OF METAL
  - SRM 51-30 FOR FASTENER CODE, REMOVAL AND INSTALLATION, HOLES SIZES, AND EDGE MARGINS
  - SRM 51-30-3 FOR FASTENER SUBSTITUTION

[A] FOR CRACKS TO THE HORIZONTAL FLANGE OF THE ATTACH BRACKET, GO TO THE BOEING COMPANY FOR INSTRUCTIONS.

[B] USE SHIMS AS NECESSARY TO KEEP THE GAPS 0.005 INCH OR LESS BEFORE FASTENER INSTALLATION.

[C] LATER MODEL AIRPLANE WITH FOUR INITIAL FASTENERS IS SHOWN. OTHER AIRPLANES HAVE TWO INITIAL FASTENERS.

FASTENER SYMBOLS

REFERENCE FASTENER LOCATION

REPAIR FASTENER LOCATION. INSTALL A BACB30FM6() HEX DRIVE BOLT. AS AN ALTERNATIVE, INSTALL A MS90354 BLIND BOLT

REPAIR MATERIAL			
PART		QTY	MATERIAL
1	ANGLE	1	0.040 INCH THICK CLAD 2024-T3 WITH A 0.16 MINIMUM INSIDE BEND RADIUS AND A MINIMUM 2D FASTENER EDGE MARGIN [B]

TABLE I

Repair of Glide Slope Antenna Attach Bracket
Figure 3 (Sheet 1)

BOEING PROPRIETARY - Copyright © - Unpublished Work - See title page for details.

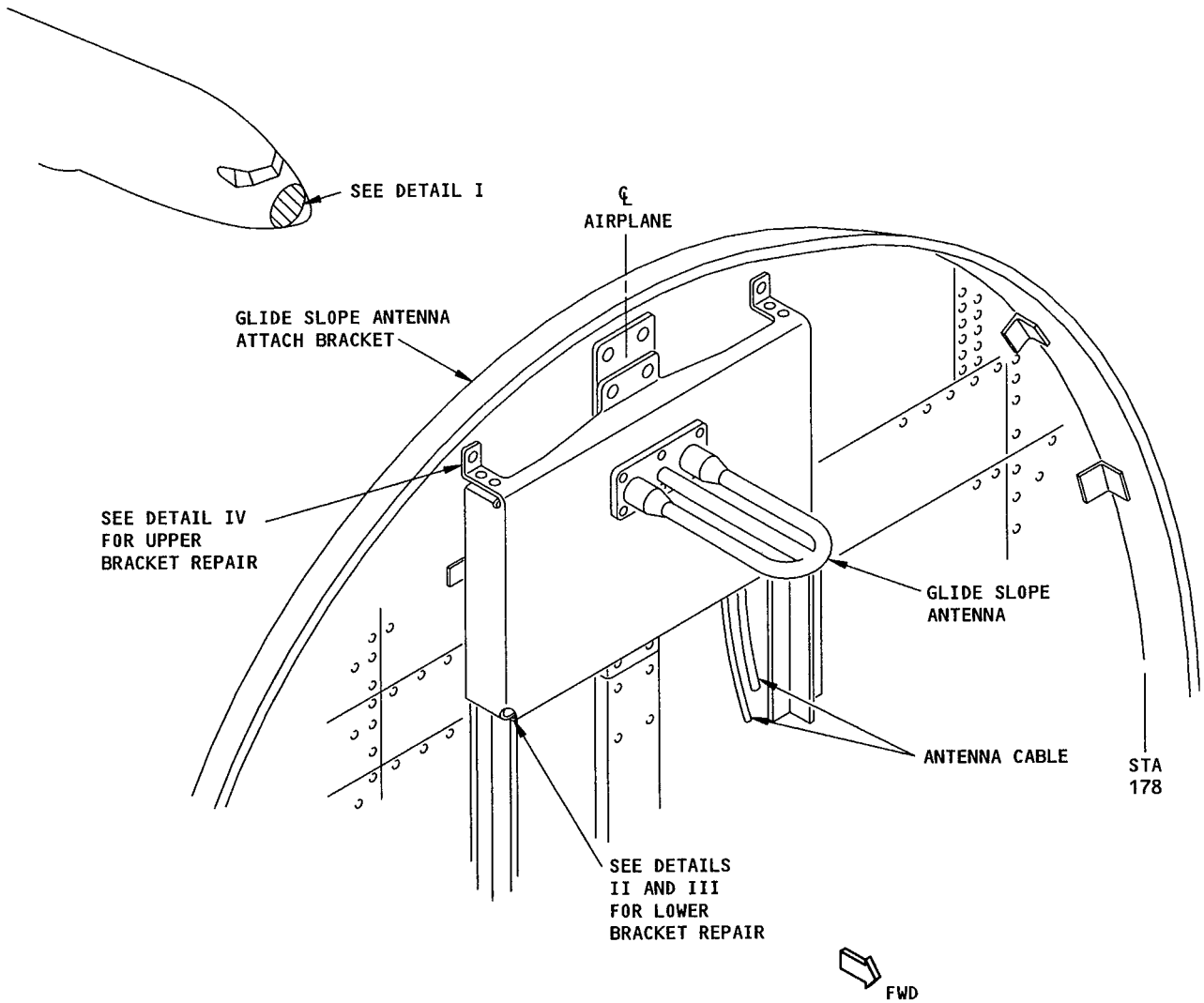

GLIDE SLOPE ANTENNA ATTACH BRACKET
DETAIL I

Repair of Glide Slope Antenna Attach Bracket
Figure 3 (Sheet 2)

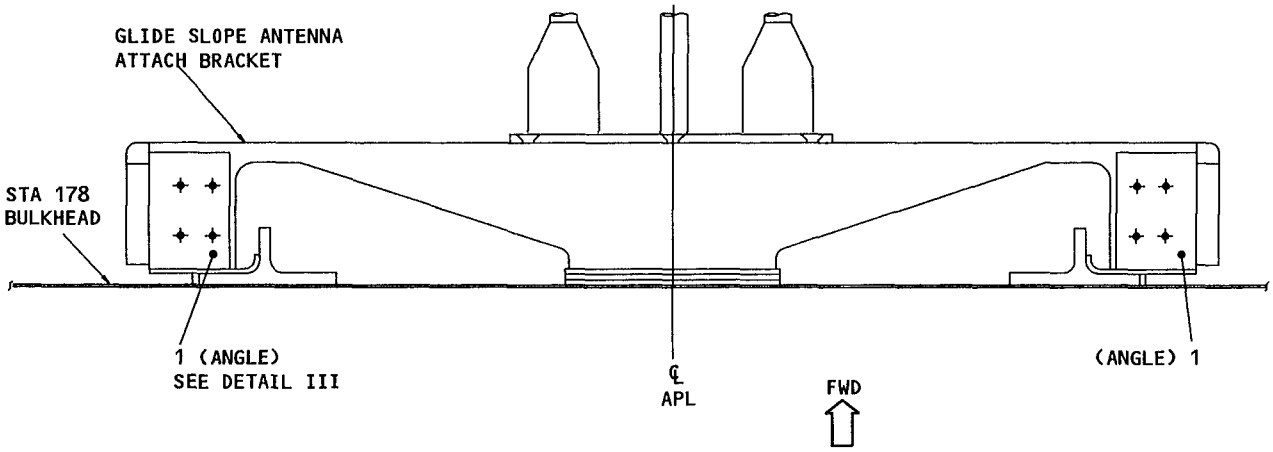

LOWER BRACKET REPAIR
(VIEW FROM BOTTOM)
DETAIL II

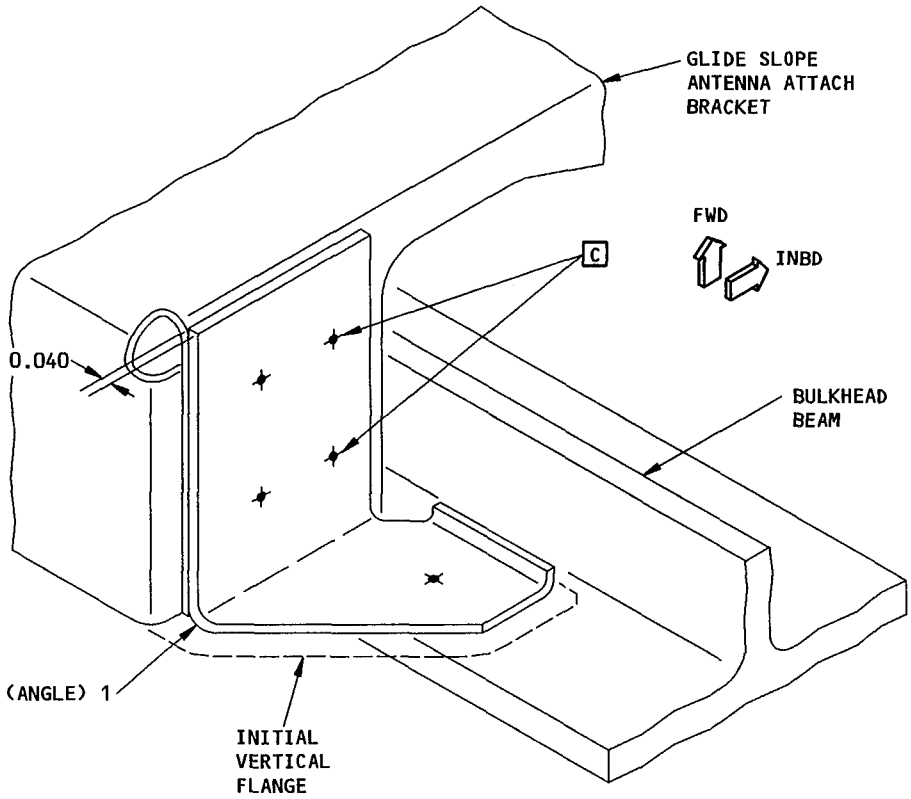

LOWER BRACKET REPAIR
DETAIL III

Repair of Glide Slope Antenna Attach Bracket
Figure 3 (Sheet 3)

E89360

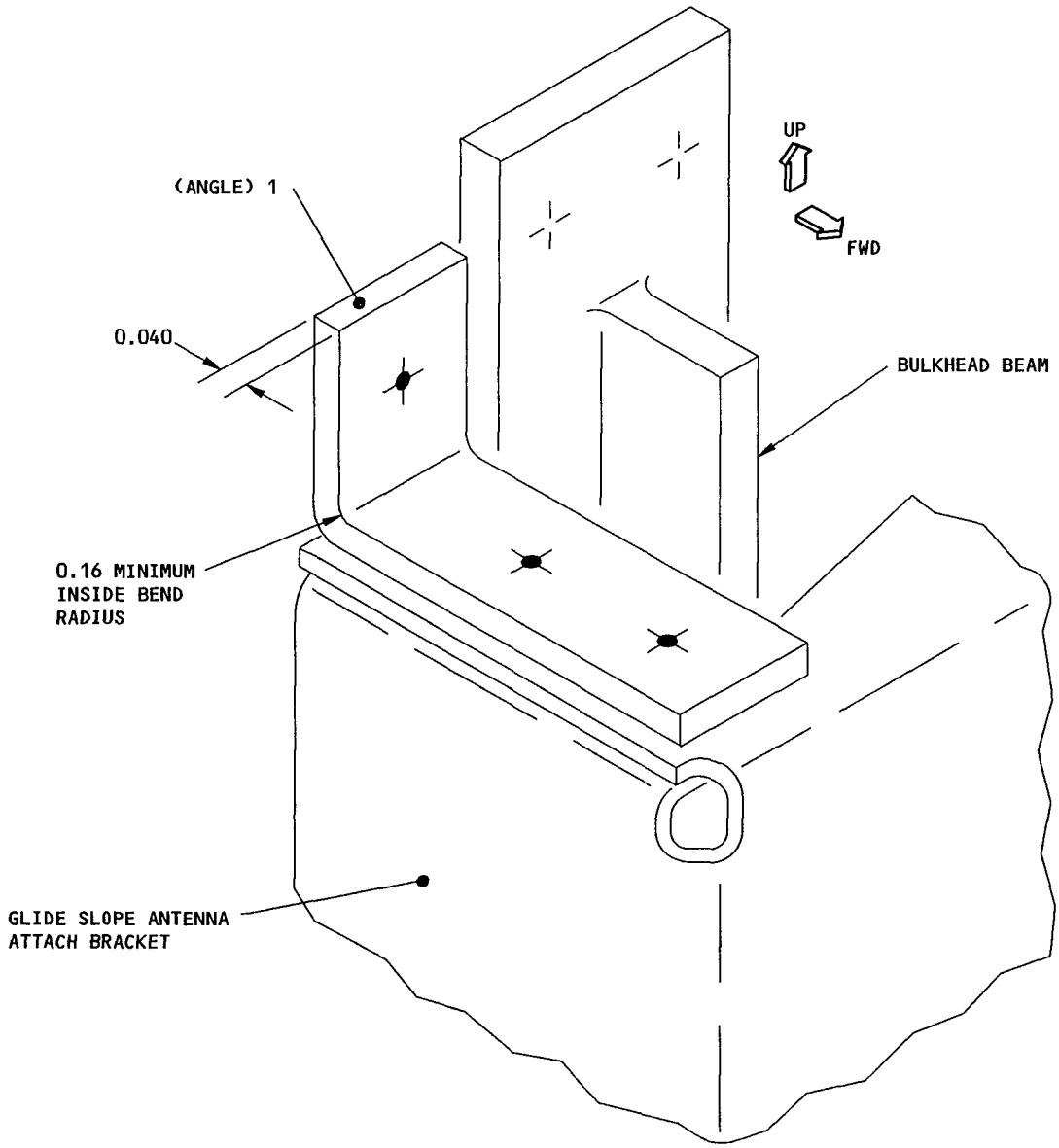

UPPER BRACKET REPAIR
DETAIL IV

Repair of Glide Slope Antenna Attach Bracket
Figure 3 (Sheet 4)

APPLICABILITY

THIS REPAIR IS FOR WEB CRACKS 1.4 INCHES OR LESS IN LENGTH. TELL BOEING IF A CRACK IS LONGER THAN 1.4 INCHES.

THIS REPAIR IS FOR AIRPLANES THAT DO NOT HAVE AN ANTENNA INSTALLATION OR SUPPORT MEMBERS IN THE REPAIR AREA. GET REPAIR INSTRUCTIONS FROM BOEING FOR AIRPLANES THAT HAVE AN ANTENNA INSTALLATION OR SUPPORT MEMBERS IN THE REPAIR AREA.

REPAIR INSTRUCTIONS

1. Get access to the repair area.
2. Remove the formed angle. If there is a shim between the formed angle and the bulkhead chord, remove the shim also.
3. Remove the fasteners in the area where the part 1 doubler will be installed. See Detail II.

WARNING: WEAR PROTECTIVE CLOTHING AND EYE PROTECTION WHEN YOU USE SOLID CARBON DIOXIDE (DRY ICE). MAKE SURE YOU HAVE SUFFICIENT VENTILATION AND DO NOT USE DRY ICE IN AN ENCLOSED SPACE. DRY ICE CAN INJURE YOUR SKIN OR CAUSE BREATHING PROBLEMS.

CAUTION: USE SPECIAL CARE TO CUT AND REMOVE THE DAMAGED AREA OF THE WEB. DO NOT GOUGE, SCRATCH, OR BUCKLE THE STRUCTURE ADJACENT TO THE CUTOUT. IF YOU DAMAGE THE ADJACENT STRUCTURE, MORE REPAIR WORK WILL BE NECESSARY.

4. Carefully drive nylon or hardwood wedges between the web and the strap in the area where a crack has occurred. Use sufficient wedges to gradually separate the parts and prevent buckling.

   NOTE: To help separate the sealed parts, cold soak the area with solid carbon dioxide (dry ice) for approximately 30 minutes before you use the wedges.

5. Carefully cut out the damaged area of the web. Use a thin steel sheet between the strap and the web at the crack location to prevent damage to the strap.
6. Remove the steel sheet.
7. Make sure there are no cracks in the web at the edges of the cut. Do a high frequency eddy current (HFEC) inspection along the cut edges of the web. Refer to NDT, Part 6, 51-00-00.
8. After the HFEC inspection shows that there are no crack indications at the edges of the web cutout, put the steel sheet in position again. Make the web cutout larger by 0.05 inch all around the perimeter of the web cutout. This will remove possible cracks that you did not find during the HFEC inspection.
9. Remove the steel sheet.
10. Make the repair parts. See Detail II and Table I.
11. Assemble the repair parts and the formed angle. Drill the fastener holes.
12. Remove the formed angle.
13. Disassemble the repair parts.
14. Remove the nicks, scratches, gouges, burrs, and sharp edges from the repair parts and the initial structure.
15. Apply a chemical conversion coating to the repair parts and to the bare surfaces of the initial structure. Refer to SRM 51-10-2.
16. Apply one layer of BMS 10-11, Type I primer to the repair parts and to the bare surfaces of the initial structure. Refer to SOPM 20-41-02.
17. Install the repair parts and the formed angle with BMS 5-95 sealant on the mating surfaces. Put BMS 5-95 sealant in the clearances between the parts.
18. Install the fasteners. Install the hex drive bolt wet with BMS 5-95 sealant in a transition fit hole.
19. Apply one layer of BMS 10-11, Type I primer to the repair area. Refer to SOPM 20-41-02.
20. Apply one layer of BMS 10-11, Type II enamel to the repair area. Refer to SOPM 20-41-02.
21. Put fillet seals on the hex drive bolts at the ⌖ location. Use BMS 5-95 sealant. Refer to SRM 51-20-4.
22. Apply one layer of BMS 3-23 or BMS 3-29 corrosion inhibiting compound to the repair area on the forward and aft faces of the bulkhead.

Body Station 178 Bulkhead Web Repair at BL 0 and WL 187
Figure 4 (Sheet 1)

NOTES

- A DAMAGE TOLERANCE ASSESSMENT IS NOT NECESSARY FOR THIS FLAT PRESSURE BULKHEAD WEB REPAIR IF EXTERNAL GENERAL VISUAL (SURVEILLANCE) INSPECTION INTERVALS ARE NOT MORE THAN 8,000 FLIGHT CYCLES. THUS, THIS WEB REPAIR IS NOT SUBJECT TO THE REPAIR ASSESSMENT PROGRAM SPECIFIED IN SRM 51-00-6.
- THIS REPAIR WILL NOT HAVE AN EFFECT ON THE STRUCTURALLY SIGNIFICANT ITEMS GIVEN IN SRM 51-00-4, FIGURE 3. THUS, NO CHANGE TO THE SUPPLEMENTAL STRUCTURAL INSPECTION DOCUMENT (SSID) INSPECTION PROGRAM IS NECESSARY.
- ALL DIMENSIONS ARE IN INCHES, UNLESS GIVEN DIFFERENTLY.
- USE SHIMS AS NECESSARY TO KEEP THE GAPS 0.010 INCH OR LESS BEFORE YOU INSTALL THE FASTENERS.
- D = THE FASTENER DIAMETER
- INSTALL THE REPAIR FASTENERS AT A 4D TO 5D DISTANCE BETWEEN FASTENERS. KEEP A MINIMUM EDGE MARGIN OF 1.7D AT THE FASTENER LOCATIONS ADJACENT TO THE CUT EDGES OF THE WEB.
- WHEN YOU USE THIS REPAIR REFER TO:
  - AMM 51-21 FOR FOR INTERIOR AND EXTERIOR FINISHES
  - AMM 51-31 FOR SEALS AND SEALING
  - NDT PART 6, 51-00-00 FOR THE EDDY CURRENT PROCEDURES OF GENERAL STRUCTURES
  - SOPM 20-41-02 FOR APPLICATION OF CHEMICAL AND SOLVENT RESISTANT FINISHES
  - SRM 51-10-1 FOR INSPECTION AND REMOVAL OF DAMAGE
  - SRM 51-10-2 FOR PROTECTIVE TREATMENT OF METAL
  - SRM 51-20-4 FOR REPAIR SEALING
  - SRM 51-30 FOR FASTENER CODE, REMOVAL AND INSTALLATION, HOLE SIZES AND EDGE MARGINS
  - SRM 51-30-8 FOR COUNTERSINKING OF HOLES.

[A] YOU CAN INSTALL A DIFFERENT THICKNESS OF LAMINATED SHIM MATERIAL IF NECESSARY.

[B] IT IS OPTIONAL TO INSTALL PART 5, AND NOT PART 4, IF YOU CAN GET THE CORRECT THICKNESS OF PART 5.

FASTENER SYMBOLS

REFERENCE FASTENER LOCATION.

REPAIR FASTENER LOCATION. INSTALL A BACR15BB5D RIVET.

INITIAL FASTENER LOCATION. INSTALL A FASTENER THAT IS THE SAME TYPE AS THE INITIAL FASTENER WITH THE SAME DIAMETER. USE 1/32 OVERSIZE RIVET IF NECESSARY.

INITIAL FASTENER LOCATION. INSTALL A BACB30NX6K()X HEX DRIVE BOLT WITH A BACC30X6 COLLAR.

INITIAL FASTENER LOCATION. INSTALL A BACR15BA5D RIVET.

REPAIR MATERIAL			
PART		QTY	MATERIAL
1	DOUBLER	1	2024-T3 CLAD SHEET 0.056 THICK
2	FILLER	1	2024-T3 CLAD SHEET 0.032 THICK
3	SHIM	1	2024-T3 CLAD SHEET 0.056 THICK
4	SHIM	1	2024-T3 CLAD SHEET 0.056 THICK [B]
5	SHIM	(AS NECESSARY)	LAMINATED ALUMINUM SHIM, BACS40R007B016P OR AN EQUIVALENT [A] [B]

TABLE I

Body Station 178 Bulkhead Web Repair at BL 0 and WL 187
Figure 4 (Sheet 2)

BOEING PROPRIETARY - Copyright © - Unpublished Work - See title page for details.

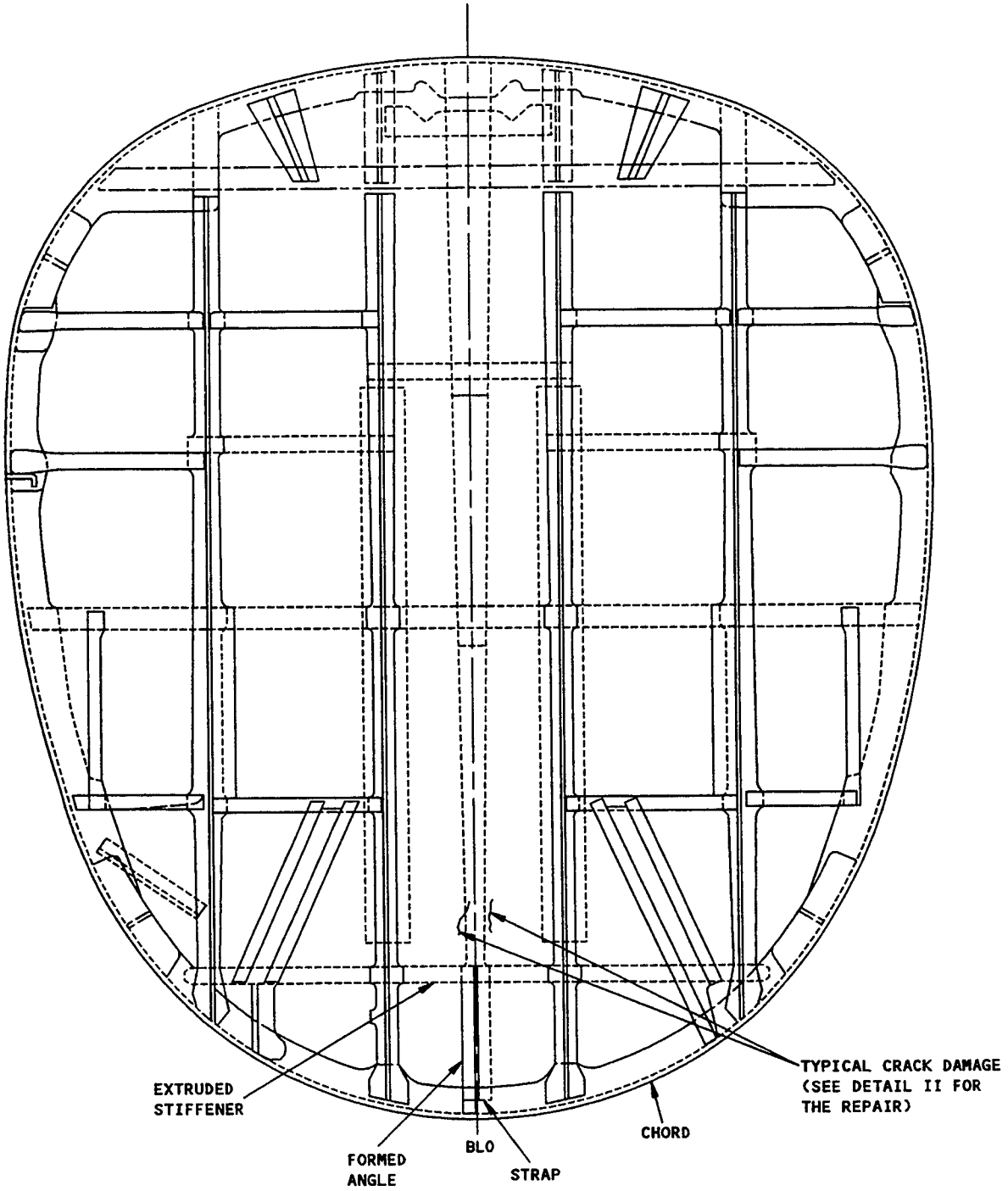

BODY STATION 178 BULKHEAD (REAR VIEW)
DETAIL I

Body Station 178 Bulkhead Web Repair at BL 0 and WL 187
Figure 4 (Sheet 3)

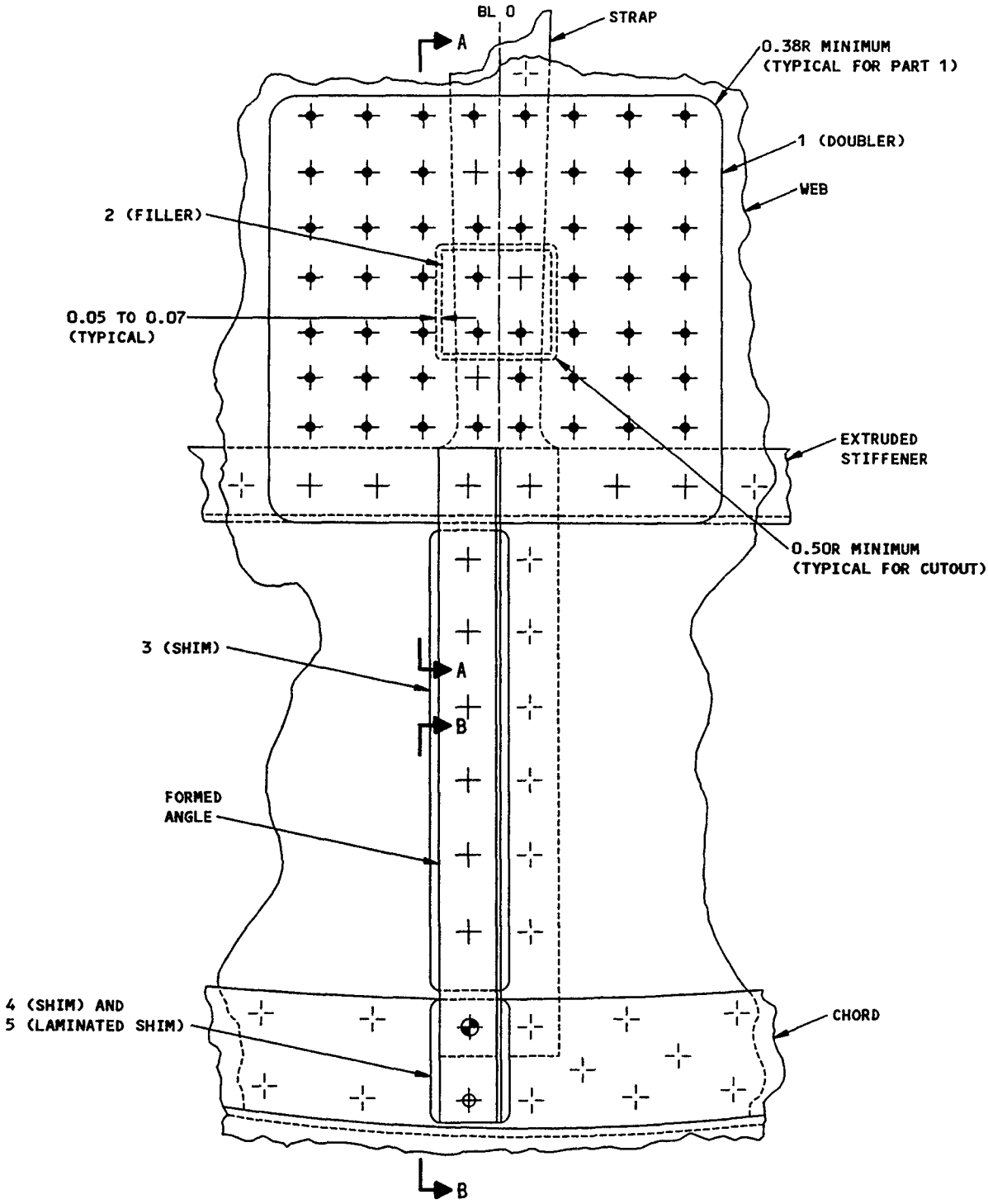

INSTALLATION OF THE REPAIR (REAR VIEW)

DETAIL II

Body Station 178 Bulkhead Web Repair at BL 0 and WL 187
Figure 4 (Sheet 4)

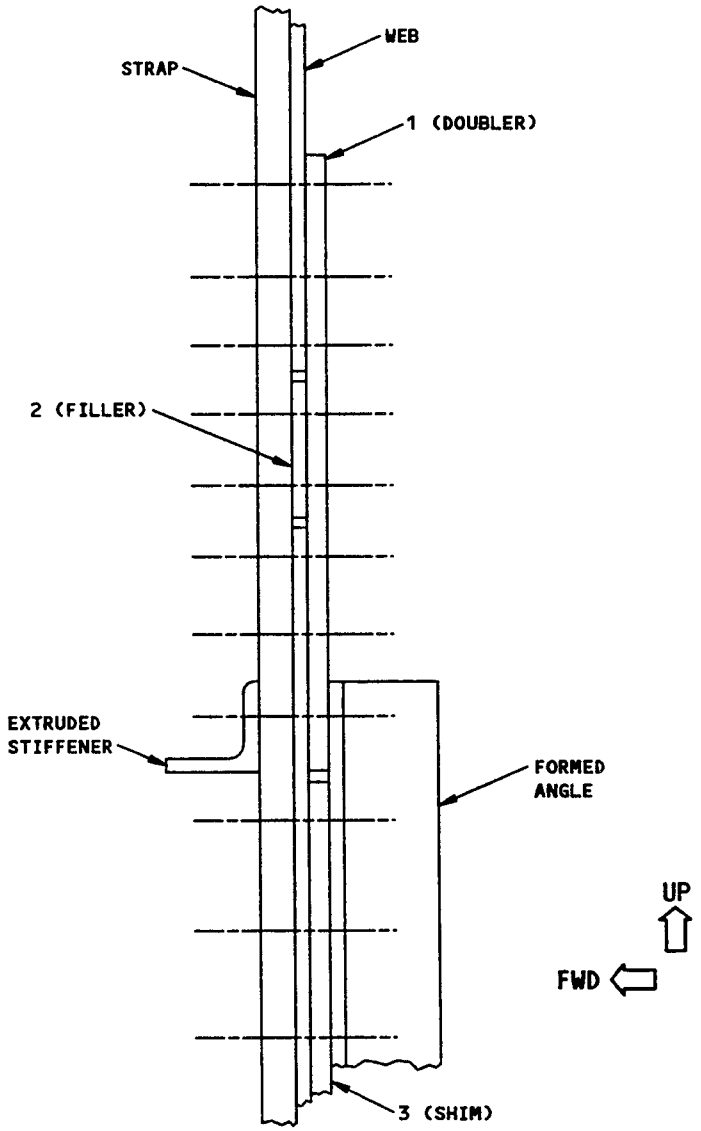

SECTION A-A

Body Station 178 Bulkhead Web Repair at BL 0 and WL 187
Figure 4 (Sheet 5)

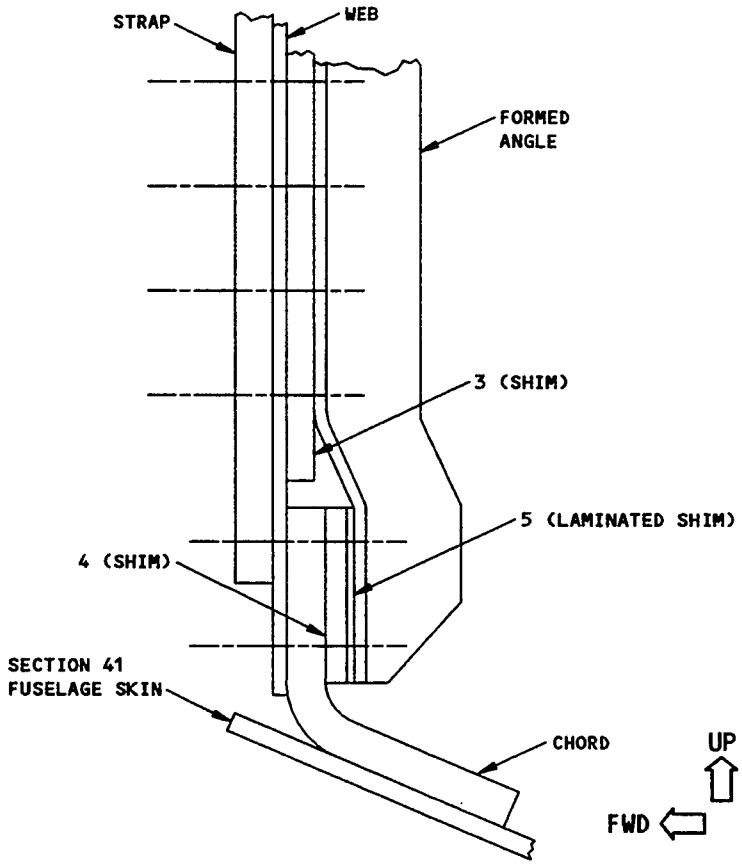

SECTION B-B

Body Station 178 Bulkhead Web Repair at BL 0 and WL 187
Figure 4 (Sheet 6)

APPLICABILITY

INSTALLATION OF THIS ACCESS HOLE PERMITS THE INSPECTION AND REPAIR OF BS 178 BULKHEAD SIDE CHORDS AT WL 212.

THE ACCESS HOLE INSTALLATION IS AN ALTERNATIVE TO THE SIDE WEB SPLICE INSTALLATION AT THE SAME LOCATION AS GIVEN IN SB 737-53A1173.

THIS INSTALLATION IS APPLICABLE TO THE LEFT SIDE AND THE RIGHT SIDE OF THE AIRPLANE.

REPAIR INSTRUCTIONS

1. Open the nose radome to get access to the bulkhead. See Detail I.
2. Make the access hole. Do the steps that follow:
   - Find a center for the new access hole (reference center: WL 211.0 and BL 23.0)
   - Make a circular mark with a radius of 2.0 inches from the center
   - Cut a smooth, circular hole in the web and bonded doubler as shown in Detail II or Detail IV
   - Remove the nicks, scratches, gouges, burrs, and sharp edges from the web and bonded doubler.
3. Remove the fasteners at the +, ⊕, ■, ⊡, and ⊙ locations. Remove also the fastener at the ⊕ location. [J]

WARNING: WEAR PROTECTIVE CLOTHING AND EYE PROTECTION WHEN YOU USE SOLID CARBON DIOXIDE (DRY ICE). MAKE SURE YOU HAVE SUFFICIENT VENTILATION AND DO NOT USE DRY ICE IN AN ENCLOSED SPACE. DRY ICE CAN INJURE YOUR SKIN OR CAUSE BREATHING PROBLEMS.

CAUTION: USE SPECIAL CARE TO SEPARATE OR REMOVE THE SEALED PARTS. DO NOT GOUGE, SCRATCH, OR BUCKLE THE ADJACENT STRUCTURE. IF YOU DAMAGE THE ADJACENT STRUCTURE, MORE REPAIR WORK WILL BE NECESSARY.

4. Carefully drive nylon or hardwood wedges between the seal retainer and the bonded doubler to remove the seal retainer. Also, carefully drive nylon or hardwood wedges between the WL 207 horizontal stiffener and the bonded doubler or bulkhead web to separate the parts. Use a sufficient number of wedges to gradually separate the parts and prevent buckling. Separate the parts sufficiently to permit the later installation of the repair doubler and the repair fillers.

   NOTE: To help separate the sealed parts, cold soak the area with solid carbon dioxide (dry ice) for approximately 30 minutes before you use the wedges.
5. After you do the necessary inspection or repair to the structure in the access hole area, make the repair parts. See Table I.
6. Put the repair parts in position and drill the fastener holes. Drill 0.190 to 0.194 diameter, class 1 holes in the part 2 cover plate. See Details II,III, and IV.
7. Remove the repair parts.
8. Remove the nicks, scratches, gouges, burrs, and sharp edges from the repair parts.
9. Apply a chemical conversion coating to the repair parts and the bare edges of the initial structure. Refer to SRM 51-10-2.
10. Apply one layer of BMS 10-11, Type I primer to the repair parts and to the bare edges of the initial structure. Refer to SOPM 20-41-02.
11. Put the part 1 doubler and the parts 3 and 4 fillers in position with BMS 5-95 sealant between the mating surfaces and in the clearances. Make sure the repair doubler and the repair fillers are installed between the WL 207 stiffener and the bonded doubler or bulkhead web. See Details II,III, and IV.
12. Install the fasteners at the ⊙ and the ■ locations wet with BMS 5-95 sealant.
13. Put the seal retainer in position (for Repair I only) with BMS 5-95 sealant between the mating surfaces.
14. Install the fasteners at the ⊕, +, ⊡, ⊕, and ▲ locations. Install fasteners inboard of the ⊕ location that were removed to separate the parts.
15. Install the BACN10JY3 nutplates on the aft face of the bulkhead web. Install these nutplates in the positions given in Detail V. Install with MS20426AD3 rivets.

BS 178 Bulkhead - Access Hole Installation with a Cover Plate at WL 211.0 and BL 23.0, and with No Fail-Safe Clip at WL 210
Figure 5 (Sheet 1)

BOEING PROPRIETARY - Copyright © - Unpublished Work - See title page for details.

REPAIR INSTRUCTIONS (CONT)

16. Put the part 2 cover plate in position with BMS 5-95 sealant between the mating surfaces.
17. Put BMS 3-24 grease on the part of the bolt shank that does not have threads (for the bolt at each ⏚ location).
18. Install the bolts and the washers at the ⏚ locations. Refer to SRM 51-30-4 for torque values for a dry bolt installation.
19. Apply one layer of BMS 10-11, Type I primer to the repair area.
20. Apply one layer of BMS 10-11, Type II enamel to the repair area.
21. Close the nose radome.

NOTES

- A DAMAGE TOLERANCE ASSESSMENT IS NOT NECESSARY FOR FLAT PRESSURE BULKHEAD WEB REPAIRS IF EXTERNAL GENERAL VISUAL (SURVEILLANCE) INSPECTION INTERVALS ARE NOT MORE THAN 8,000 FLIGHT CYCLES. THUS, THESE WEB REPAIRS ARE NOT SUBJECT TO THE REPAIR ASSESSMENT PROGRAM SPECIFIED IN SRM 51-00-6.
- THESE REPAIRS WILL NOT HAVE AN EFFECT ON THE STRUCTURALLY SIGNIFICANT ITEMS GIVEN IN SRM 51-00-4, FIGURE 3. THUS, NO CHANGE TO THE SUPPLEMENTAL STRUCTURAL INSPECTION DOCUMENT (SSID) INSPECTION PROGRAM IS NECESSARY.
- D = THE DIAMETER OF THE FASTENER.
- ALL DIMENSIONS ARE IN INCHES, UNLESS SPECIFIED DIFFERENTLY.
- EDGE MARGINS MUST BE A MINIMUM OF 1.7D IN THE REPAIR PARTS, UNLESS SPECIFIED DIFFERENTLY.
- ALL CORNERS MUST HAVE A MINIMUM RADIUS OF 0.5 INCH.
- KEEP A 4D TO 6D DISTANCE BETWEEN REPAIR FASTENERS.
- WHEN YOU USE THIS REPAIR, REFER TO:
  - AMM 51-21 FOR INTERIOR AND EXTERIOR FINISHES
  - AMM 51-31 FOR SEALS AND SEALING
  - BAC 5602 OR MIL-H-6088 FOR HEAT TREATMENT OF ALUMINUM ALLOYS
  - SOPM 20-20-02 FOR PENETRANT INSPECION
  - SOPM 20-41-02 FOR APPLICATION OF CHEMICAL AND SOLVENT RESISTANT FINISHES
  - SRM 51-10-1 FOR INSPECTION AND REMOVAL OF DAMAGE
  - SRM 51-10-2 FOR PROTECTIVE TREATMENT OF METALLIC AND GRAPHITE MATERIALS
  - SRM 51-20-4 FOR REPAIR SEALING
  - SRM 51-20-1 FOR FORMING OF SHEET METAL MATERIALS
  - SRM 51-30 FOR FASTENER CODE, INSTALLATION AND REMOVAL, HOLE SIZES, EDGE MARGINS, AND TORQUE VALUES.

[A] INSTALL REPAIR I OR REPAIR II.

[B] BEND THIS PART OF THE REPAIR DOUBLER TO A SHAPE THAT IS ALMOST THE SAME SHAPE AS THE SEAL RETAINER. REFER TO SRM 51-20-1. ADJUST THE BEND IF NECESSARY UNTIL YOU GET THE CORRECT RADOME FIT AND KEEP THE SEAL IN THE CORRECT POSITION.

[C] INSTALL THE SEAL RETAINER ON THE REPAIR DOUBLER. MAKE SURE THAT YOU GET THE CORRECT RADOME FIT. MAKE SURE THAT YOU KEEP THE SEAL IN THE CORRECT POSITION.

[D] FOR REPAIR II, BEND THE REPAIR DOUBLER AS GIVEN IN NOTE [B] BEFORE YOU HEAT TREAT THE DOUBLER. FOR REPAIR I AND REPAIR II, HEAT TREAT THE DOUBLER TO THE -T42 CONDITION BEFORE YOU INSTALL THE DOUBLER. REFER TO BAC5602 OR MIL-H-6088.

[E] AS AN ALTERNATIVE FOR REPAIR I, YOU CAN USE 0.071 THICK 2024-T3 CLAD SHEET TO MAKE THE REPAIR DOUBLER.

[F] AS AN ALTERNATIVE FOR REPAIR II, YOU CAN FORM THE REPAIR DOUBLER (SEE NOTE [B]) IN THE 2024-T3 CONDITION AS GIVEN IN SRM 51-20-1. AFTER YOU FORM THE DOUBLER, DO A DYE PENETRANT INSPECTION OF THE BEND RADIUS AS GIVEN IN SOPM 20-20-02. IF YOU FIND A CRACK IN THE BEND RADIUS, DISCARD THE DOUBLER AND MAKE ANOTHER REPAIR DOUBLER.

BS 178 Bulkhead - Access Hole Installation with a Cover Plate at WL 211.0 and BL 23.0, and with No Fail-Safe Clip at WL 210
Figure 5 (Sheet 2)

BOEING PROPRIETARY - Copyright © - Unpublished Work - See title page for details.

NOTES (CONT)

[G] THIS IS A REFERENCE FASTENER LOCATION ONLY IF YOU DO NOT INSTALL A SIDE CHORD REPAIR ANGLE AT WL 212 AS GIVEN IN SRM 53-10-11 OR IN SB 737-53A1173. IF YOU INSTALL A SIDE CHORD REPAIR ANGLE AT THE SAME TIME OR AFTER YOU INSTALL THIS REPAIR, INSTALL THE FASTENERS SPECIFIED IN THE SIDE CHORD REPAIR (WHEN YOU INSTALL THE REPAIR ANGLE).

[H] INSTALL THE INITIAL TYPE OF FASTENER AT THIS LOCATION ONLY IF YOU DO NOT INSTALL A SIDE CHORD REPAIR ANGLE AT WL 212 AS GIVEN IN SRM 53-10-11 OR IN SB 737-53A1173. IF YOU INSTALL A SIDE CHORD REPAIR ANGLE AT THE SAME TIME OR AFTER YOU INSTALL THIS REPAIR, INSTALL THE FASTENERS SPECIFIED IN THE SIDE CHORD REPAIR (WHEN YOU INSTALL THE REPAIR ANGLE).

[I] REMOVE THE INITIAL FASTENER AT THIS LOCATION TO PERMIT THE STIFFENER TO BE SEPARATED FROM THE BONDED DOUBLER OR WEB IN THE REPAIR AREA. THIS WILL PERMIT YOU TO INSTALL LATER THE REPAIR DOUBLER AND THE REPAIR FILLERS BETWEEN THE STIFFENER AND THE BULKHEAD WEB.

[J] REMOVE THE INITIAL FASTENER AT THIS LOCATION, AND THE INITIAL FASTENERS FURTHER INBOARD (AS NECESSARY) THAT ARE INSTALLED THROUGH THE WL 207 HORIZONTAL STIFFENER. REMOVE A SUFFICIENT NUMBER OF FASTENERS TO PERMIT THE STIFFENER TO BE SEPARATED FROM THE WEB IN THE REPAIR AREA. THIS WILL PERMIT YOU TO INSTALL THE PART 1 DOUBLER AND THE PARTS 3 AND 4 FILLERS BETWEEN THE STIFFENER AND THE BULKHEAD WEB.

[K] MAKE THIS FILLER A CONSTANT THICKNESS (0.071). INSTALL THE FILLER BETWEEN THE WL 207 HORIZONTAL STIFFENER AND THE SIDE WEB.

[L] MAKE THE TAPERED FILLER 0.071 THICK AT THE OUTBOARD END AND 0.01 THICK AT THE OPPOSITE END. MAKE SURE THE TAPERED FILLER HAS AT LEAST A 100 TO 1 TAPER AND PICKS UP AT LEAST SEVEN FASTENERS. INSTALL THE TAPERED FILLER BETWEEN THE WL 207 HORIZONTAL STIFFENER AND THE BULKHEAD CENTER WEB.

[M] YOU CAN GET A LARGER EDGE MARGIN AT THE OUTBOARD EDGE OF THE PART 1 DOUBLER IF YOU INSTALL REPAIR II.

FASTENER SYMBOLS

REFERENCE FASTENER LOCATION.

REFERENCE FASTENER LOCATION. [G]

INITIAL FASTENER LOCATION. INSTALL A FASTENER THAT IS THE SAME TYPE AS THE INITIAL FASTENER WITH THE SAME DIAMETER (OR 1/32 OVERSIZE IF NECESSARY). [H]

INITIAL FASTENER LOCATION. INSTALL A FASTENER THAT IS THE SAME TYPE AS THE INITIAL FASTENER WITH THE SAME DIAMETER (OR 1/32 OVERSIZE IF NECESSARY).

INITIAL FASTENER LOCATION. INSTALL A BACB30FP()A HEX DRIVE BOLT WITH A BACC30M COLLAR. [I]

INITIAL FASTENER LOCATION. INSTALL A BACB30FP()A HEX DRIVE BOLT WITH A BACC30M COLLAR. [I]

INITIAL FASTENER LOCATION. INSTALL A FASTENER THAT IS THE SAME TYPE AS THE INITIAL FASTENER WITH THE SAME DIAMETER (OR 1/32 INCH OVERSIZE (MAXIMUM) IF NECESSARY). [I]

INITIAL FASTENER LOCATION. INSTALL A FASTENER THAT IS THE SAME TYPE AS THE INITIAL FASTENER WITH THE SAME DIAMETER (OR OVERSIZE IF NECESSARY). [J]

REPAIR FASTENER LOCATION. INSTALL A BACB30LJ3 BOLT WITH AN AN960JD10 WASHER AND A BACN10JY3 NUT.

REPAIR FASTENER LOCATION. INSTALL A BACR15FT6D OR BACR15BB6D RIVET.

REPAIR MATERIAL			
PART		QTY	MATERIAL
1	DOUBLER	1	0.071 CLAD [D] [E] [F] 2024-0
2	COVER PLATE	1	0.071 X 5.6 DIAMETER 2024-T3 CLAD
3	FILLER	1	0.071 CLAD 2024-T3 [K]
4	TAPERED FILLER	1	0.071 CLAD 2024-T3 [L]

TABLE I

BS 178 Bulkhead - Access Hole Installation with a Cover Plate at WL 211.0 and BL 23.0, and with No Fail-Safe Clip at WL 210
Figure 5 (Sheet 3)

BOEING PROPRIETARY - Copyright © - Unpublished Work - See title page for details.

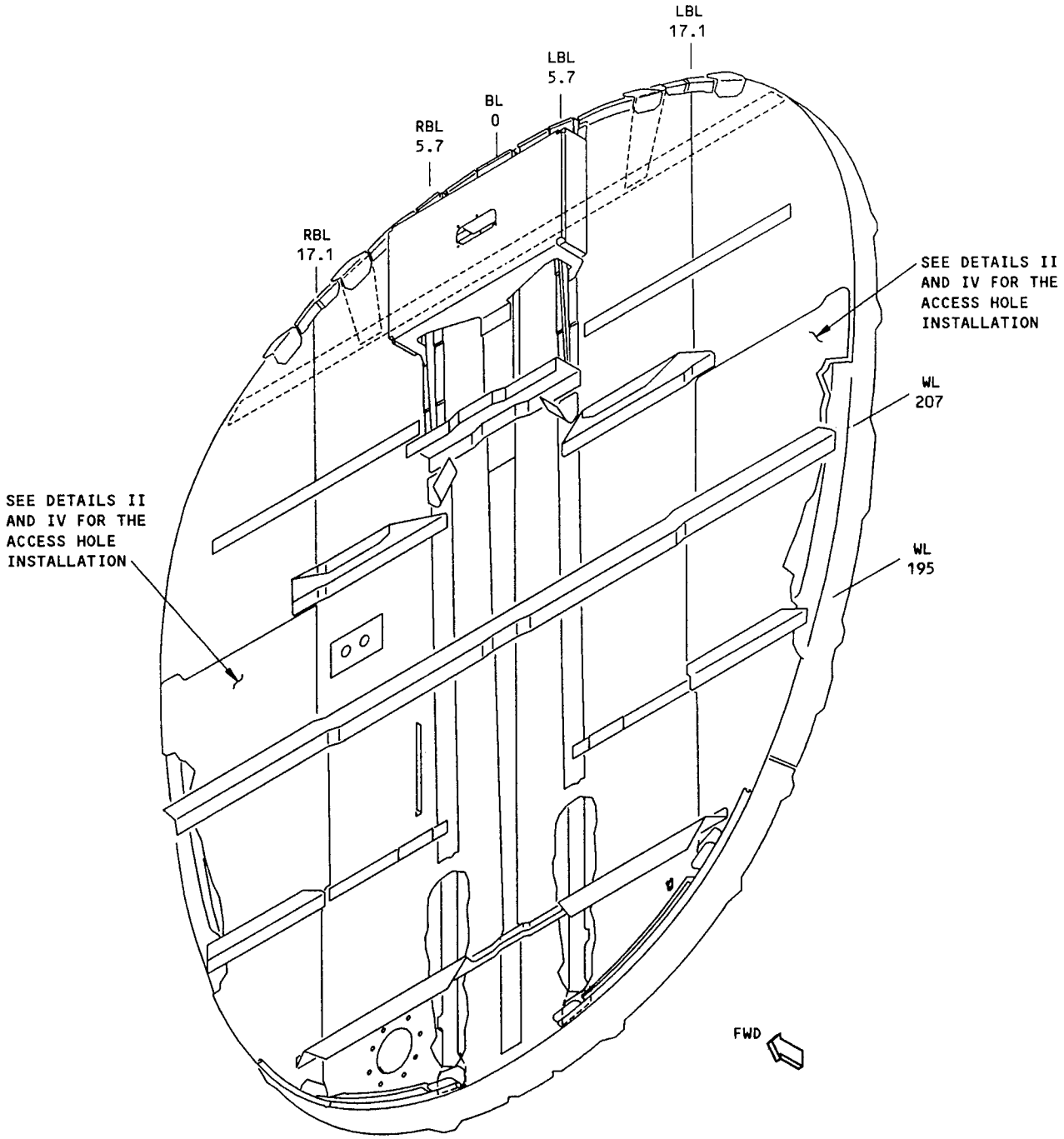

BODY STATION 178 BULKHEAD

DETAIL I

BS 178 Bulkhead - Access Hole Installation with a Cover Plate at WL 211.0 and BL 23.0, and with No Fail-Safe Clip at WL 210
Figure 5 (Sheet 4)

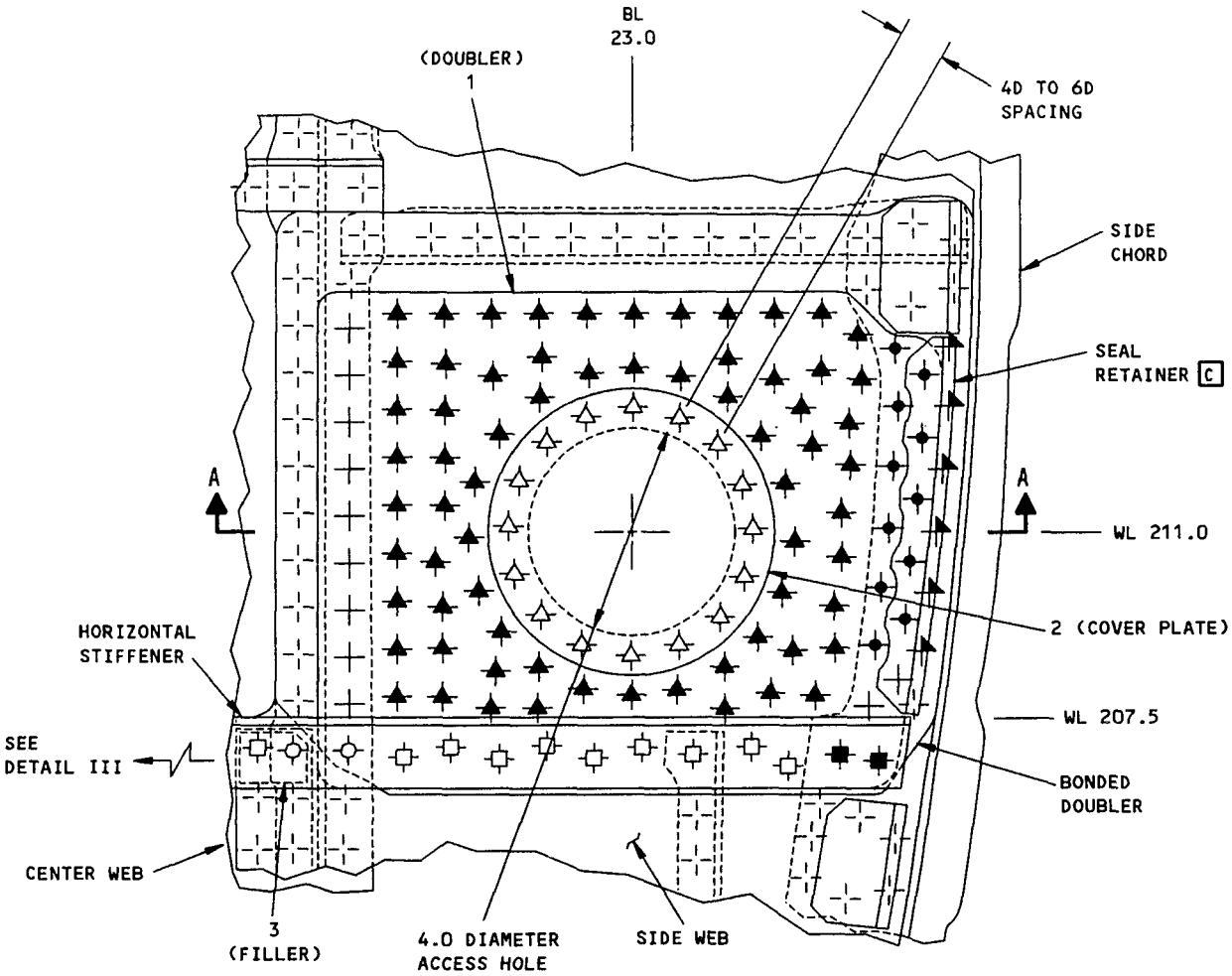

FRONT VIEW
REPAIR I A M

DETAIL II

BS 178 Bulkhead - Access Hole Installation with a Cover Plate at WL 211.0 and BL 23.0, and with No Fail-Safe Clip at WL 210
Figure 5 (Sheet 5)

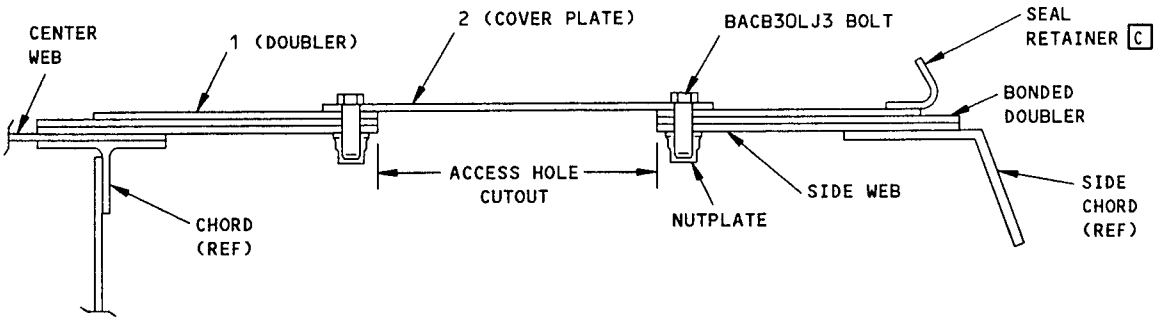

SECTION A-A

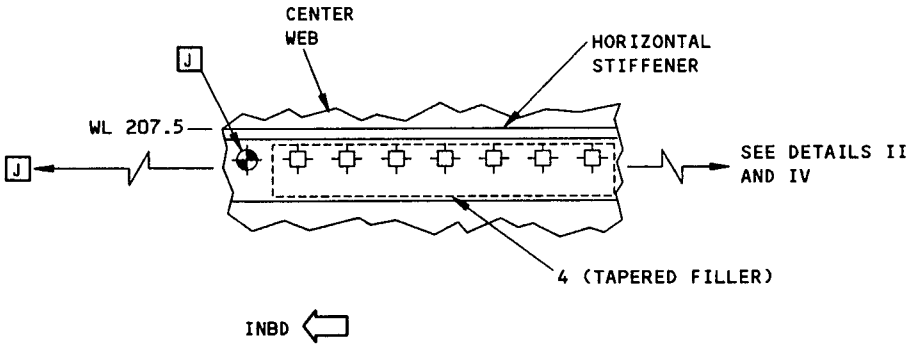

TAPERED FILLER INSTALLATION

DETAIL III

BS 178 Bulkhead - Access Hole Installation with a Cover Plate at WL 211.0 and BL 23.0, and with No Fail-Safe Clip at WL 210
Figure 5 (Sheet 6)

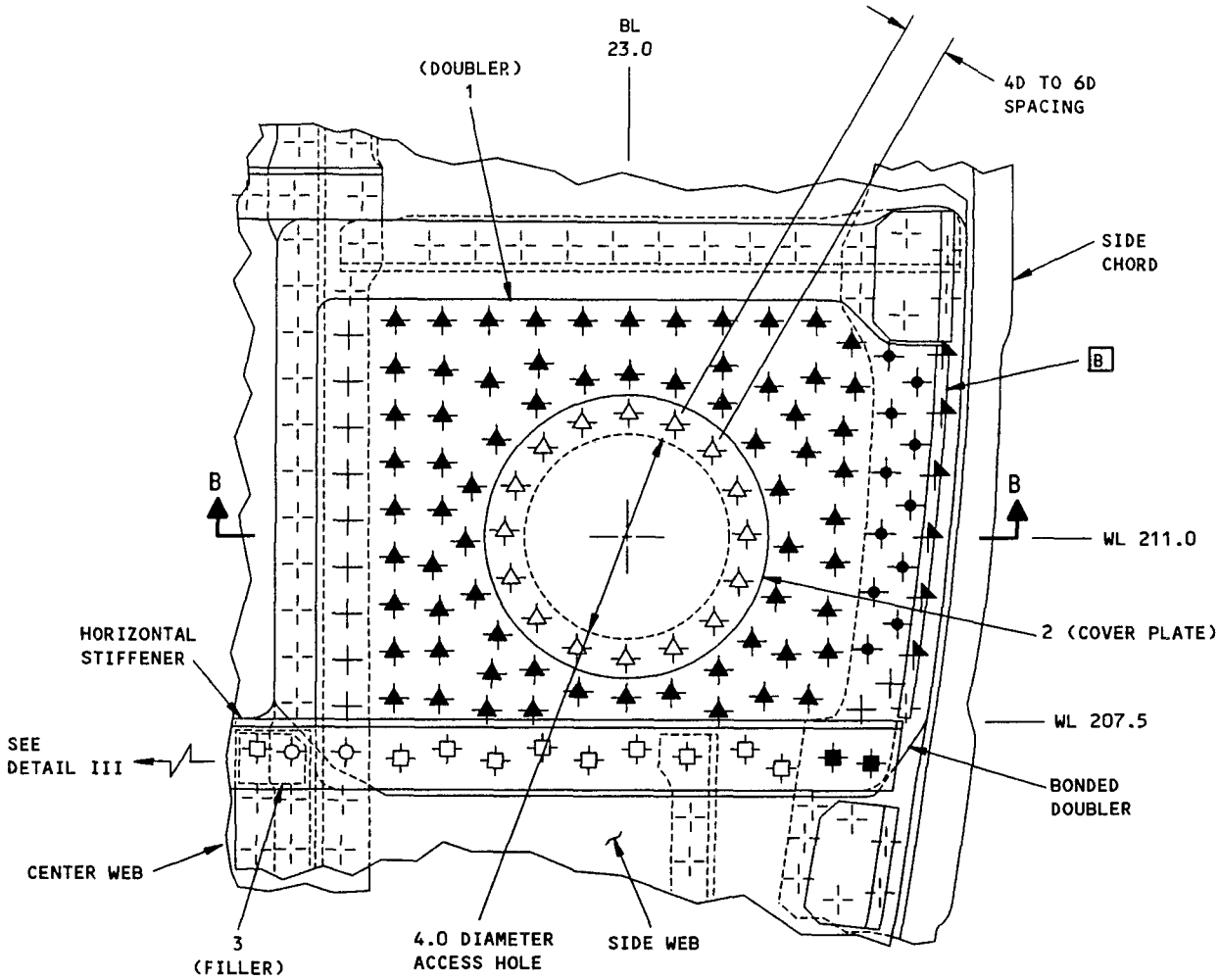

FRONT VIEW
REPAIR II [A] [M]

DETAIL IV

BS 178 Bulkhead - Access Hole Installation with a Cover Plate at WL 211.0 and BL 23.0, and with No Fail-Safe Clip at WL 210
Figure 5 (Sheet 7)

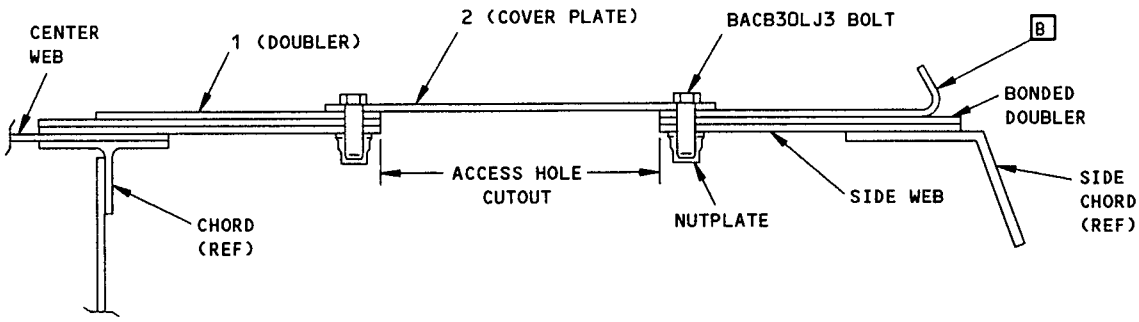

SECTION B-B

BS 178 Bulkhead - Access Hole Installation with a Cover Plate at WL 211.0 and BL 23.0, and with No Fail-Safe Clip at WL 210
Figure 5 (Sheet 8)

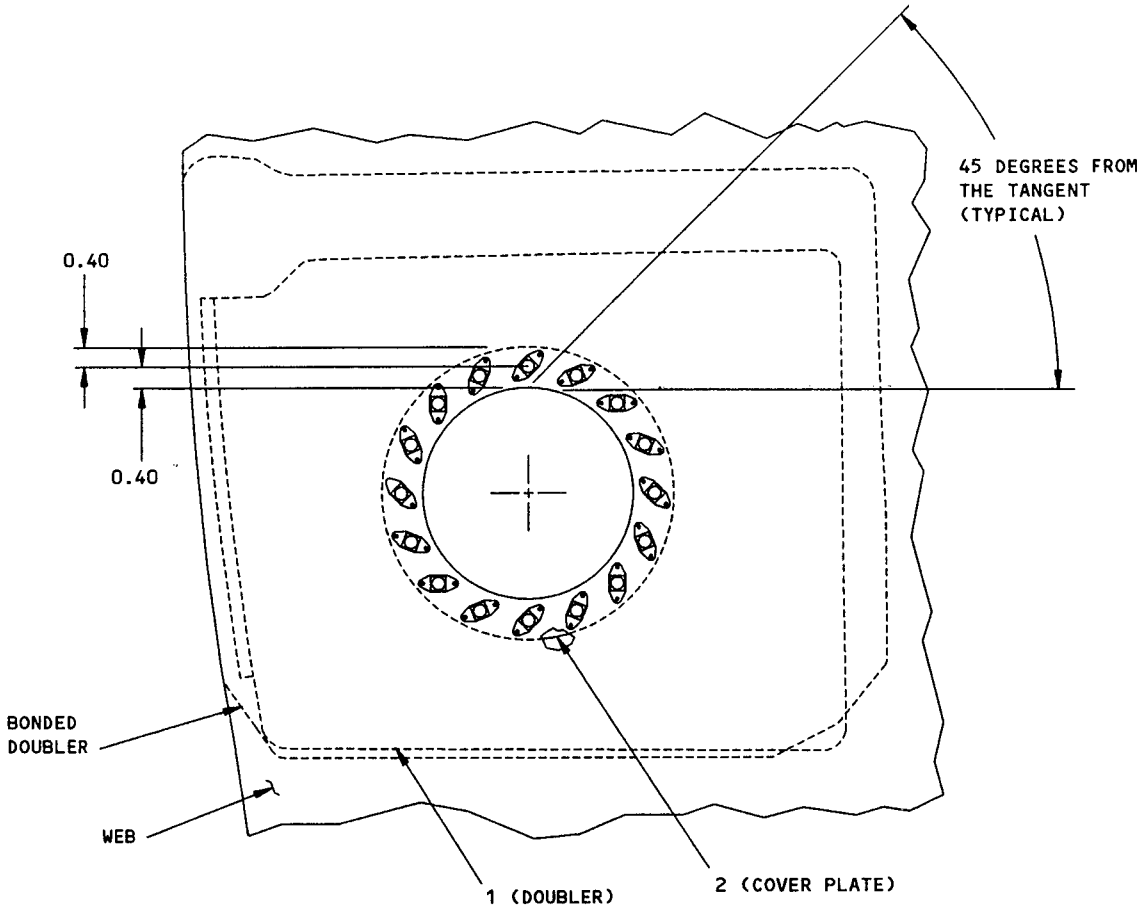

LOCATIONS OF NUTPLATES FOR COVER PLATE INSTALLATION
REAR VIEW

DETAIL V

BS 178 Bulkhead - Access Hole Installation with a Cover Plate at WL 211.0 and BL 23.0, and with No Fail-Safe Clip at WL 210
Figure 5 (Sheet 9)

APPLICABILITY
THIS REPAIR IS FOR CUM LINE NUMBERS BEFORE 3073 THAT DO NOT HAVE A NEW SIDE CHORD SEGMENT AT THE REPAIR LOCATION (AS GIVEN IN SB 737-53A1173). THIS REPAIR IS TIME LIMITED. SEE NOTES [E] AND [F].

REPAIR INSTRUCTIONS

1. Open the nose radome to get access to the forward side of the bulkhead. See Detail I.
2. Get access to the aft side of the bulkhead.
3. Remove the initial fasteners at the ✚ locations.
4. Remove the initial fasteners at the ✚ locations. [A]

WARNING: WEAR PROTECTIVE CLOTHING AND EYE PROTECTION WHEN YOU USE SOLID CARBON DIOXIDE (DRY ICE). MAKE SURE YOU HAVE SUFFICIENT VENTILATION AND DO NOT USE DRY ICE IN AN ENCLOSED SPACE. DRY ICE CAN INJURE YOUR SKIN OR CAUSE BREATHING PROBLEMS.

CAUTION: USE SPECIAL CARE TO SEPARATE OR REMOVE THE SEALED PARTS. DO NOT GOUGE, SCRATCH, OR BUCKLE THE STRUCTURE. IF YOU DAMAGE THE STRUCTURE, MORE REPAIR WORK WILL BE NECESSARY.

5. Carefully drive nylon or hardwood wedges between the seal retainer and the bonded doubler to remove the seal retainer. Also, carefully drive nylon or hardwood wedges between the skin and the side chord near the crack area, to separate the skin from the chord. Use a sufficient number of wedges to gradually separate the parts and prevent buckling.

   NOTE: To help separate the sealed parts, cold soak the area with solid carbon dioxide (dry ice) for approximately 30 minutes before you use the wedges.

6. Put a thin steel sheet between the fuselage skin and the bulkhead side chord at the area of the crack damage. See Detail II for the location of the typical crack damage.

CAUTION: DO NOT DAMAGE THE WEB, THE BONDED DOUBLER, OR THE SKIN WHEN YOU STOP DRILL THE ENDS OF THE CRACK. IF YOU DAMAGE THE ADJACENT STRUCTURE, MORE REPAIR WORK WILL BE NECESSARY.

7. From the aft side of the bulkhead, stop drill the ends of the crack through the radius of the side chord. Make each initial stop-drilled hole 3/16 inch in diameter. Make sure the center of each hole is 0.10 inch from the crack end point (away from the center of the crack).
8. Remove the steel sheet.
9. Do an eddy current inspection of the stop-drilled holes. Refer to NDT Part 6, 51-00-00.

CAUTION: DO NOT MAKE THE STOP-DRILLED HOLES LARGER THAN 1/4 INCH IN DIAMETER. IF YOU MAKE THE STOP-DRILLED HOLES TOO LARGE, YOU CAN DAMAGE THE WEB.

10. If the inspection shows crack indications, put the steel sheet in position again and make the holes larger (to a diameter of 1/4 inch). Remove the steel sheet. Repeat Step 9 to make sure the crack end is removed.

    NOTE: Do not install rivets in the stop-drilled holes. You can not correctly install rivets in the side chord radius.

11. Remove the wedges.
12. Remove the initial fasteners at the ✚ locations.
13. Get and remove material from the Part 1 repair angle. See Note [B], Detail II, and Table I.
14. Put the repair angle in position and drill the fastener holes.
15. Remove the repair angle.
16. Remove the nicks, scratches, gouges, burrs, and sharp edges from the repair angle and the initial structure.
17. Apply a chemical conversion coating to the repair angle and to the bare surfaces of the initial structure. Refer to SRM 51-10-2.

BS 178 Bulkhead - Side Chord Time Limited Repair at WL 212
Figure 6 (Sheet 1)

BOEING PROPRIETARY - Copyright © - Unpublished Work - See title page for details.

REPAIR INSTRUCTIONS (CONT)

18. Apply one layer of BMS 10-11, Type I primer to the repair angle and to the bare surfaces of the initial structure. Refer to SOPM 20-41-02.
19. Drive wedges between the side chord and the skin near the crack damage.
20. Inject BMS 5-95 sealant between the skin and the mating structure in the area where the initial fasteners were removed at the ✦ locations. See View C-C.
21. Inject BMS 5-95 sealant between the skin and the side chord in the area where the repair angle will be installed. Refer to the ✦ locations in View C-C.
22. Remove the wedges.
23. Install the repair angle with BMS 5-95 sealant on the mating surfaces. Make sure you fill the clearance between the parts (at the radius) with sealant.
24. Install the fasteners at the ✦ locations. [C]
25. Install the seal retainer with BMS 5-95 sealant on the mating surfaces.
26. Install the fasteners at the ✦ and the ✦ locations.
27. Apply one layer of BMS 10-11, Type I primer to the repair area. Refer to SOPM 20-41-02.
28. Apply one layer of BMS 10-11, Type II enamel to the repair area. Refer to SOPM 20-41-02.
29. Apply one layer of BMS 3-23 or BMS 3-29 corrosion inhibiting compound to the repair area on the forward and aft faces of the bulkhead.
30. Close access to the bulkhead.

NOTES

- THIS TIME LIMITED REPAIR IS APPROVED AS AN ALTERNATE METHOD OF COMPLIANCE TO AD 2000-05-29, PARAGRAPH "b". THE REPAIR HAS FAA APPROVAL IF YOU INSTALL THE PERMANENT REPAIR AS GIVEN IN NOTES E AND F.
- THIS REPAIR WILL NOT HAVE AN EFFECT ON THE STRUCTURALLY SIGNIFICANT ITEMS GIVEN IN SRM 51-00-4, FIGURE 3. THUS, NO CHANGE TO THE SUPPLEMENTAL STRUCTURAL INSPECTION DOCUMENT (SSID) INSPECTION PROGRAM IS NECESSARY.
- D = THE DIAMETER OF THE FASTENER.
- ALL DIMENSIONS ARE IN INCHES, UNLESS DIFFERENTLY SPECIFIED.
- EDGE MARGINS MUST BE A MINIMUM OF 2D IN THE REPAIR ANGLE.
- ALL CORNERS MUST HAVE A MINIMUM RADIUS OF 0.5 INCH.
- THIS INSTALLATION IS APPLICABLE TO THE LEFT SIDE AND THE RIGHT SIDE OF THE AIRPLANE.
- WHEN YOU USE THIS REPAIR, REFER TO:
  - AMM 51-21 FOR INTERIOR AND EXTERIOR FINISHES
  - AMM 51-31 FOR SEALS AND SEALING
  - NDT PART 6, 51-00-00 FOR EDDY CURRENT INSPECTION
  - SOPM 20-41-02 FOR APPLICATION OF CHEMICAL AND SOLVENT RESISTANT FINISHES
  - SRM 51-10-1 FOR INSPECTION AND REMOVAL OF DAMAGE
  - SRM 51-10-2 FOR PROTECTIVE TREATMENT OF METALLIC AND GRAPHITE MATERIALS
  - SRM 51-20-4 FOR REPAIR SEALING
  - SRM 51-30 FOR FASTENER CODE, INSTALLATION AND REMOVAL, HOLE SIZES, AND EDGE MARGINS.

[A] REMOVE A SUFFICIENT NUMBER OF FASTENERS TO PERMIT THE FUSELAGE SKIN TO BE SEPARATED FROM THE SIDE CHORD IN THE AREA OF THE CRACK DAMAGE. REFER TO DETAIL II FOR THE LOCATION OF THE CRACK DAMAGE.

[B] MAKE THE PART 1 REPAIR ANGLE FROM BOEING PART NUMBER 65C38090-1 (FOR THE LEFT SIDE OF THE AIRPLANE) OR 65C38090-2 (FOR THE RIGHT SIDE OF THE AIRPLANE). REMOVE MATERIAL FROM THE EDGES OF THE BOEING PART UNTIL YOU GET THE CORRECT FIT AND THE CORRECT EDGE MARGINS. MAKE SURE THE MAXIMUM GAP BETWEEN THE REPAIR ANGLE AND SIDE CHORD IS NOT GREATER THAN 0.005 INCH BEFORE YOU INSTALL FASTENERS. ADD A SHIM IF NECESSARY. YOU CAN GET THE BOEING PART FROM THE BOEING SPARE PARTS DEPARTMENT.

[C] MAKE SURE YOU INSTALL THE FASTENERS AT THE ✦ LOCATIONS BEFORE YOU INSTALL THE SEAL RETAINER.

[D] TEMPORARILY REMOVE THE SEAL RETAINER TO INSTALL THE NEW COUNTERSUNK FASTENERS AT THE ✦ LOCATIONS.

[E] THIS REPAIR HAS FAA APPROVAL IF YOU INSTALL A PERMANENT SIDE CHORD REPAIR (AS GIVEN IN SB 737-53A1173) BEFORE THE LIMIT SPECIFIED IN NOTE [F] OCCURS.

BS 178 Bulkhead - Side Chord Time Limited Repair at WL 212
Figure 6 (Sheet 2)

BOEING PROPRIETARY - Copyright © - Unpublished Work - See title page for details.

NOTES (CONT)

F THE UPPER END OF THE CRACK MUST NOT BE ABOVE THE LOWER END OF THE REPAIR ANGLE. THE LOWER END OF THE CRACK MUST NOT BE BELOW THE LOWER EDGE OF THE BONDED DOUBLER. SEE DETAIL II. IF AN END OF THE CRACK IS NOT IN THE PERMITTED AREA, INSTALL A PERMANENT SIDE CHORD REPAIR (AS GIVEN IN SB 737-53A1173). INSTALL A PERMANENT SIDE CHORD REPAIR IN LESS THAN 18 MONTHS OR 3000 ADDITIONAL FLIGHT CYCLES AFTER THE INSTALLATION OF THE TIME LIMITED REPAIR. USE THE LIMIT THAT OCCURS FIRST.

G WHEN YOU INSTALL THE SEAL RETAINER, MAKE SURE YOU GET THE CORRECT RADOME FIT. MAKE SURE YOU KEEP THE SEAL IN THE CORRECT POSITION.

FASTENER SYMBOLS

REFERENCE FASTENER LOCATION.

INITIAL FASTENER LOCATION. INSTALL A FASTENER THAT IS THE SAME TYPE AS THE INITIAL FASTENER WITH THE SAME DIAMETER.

INITIAL FASTENER LOCATION. INSTALL A FASTENER THAT IS THE SAME TYPE AS THE INITIAL FASTENER WITH THE SAME DIAMETER.

INITIAL FASTENER LOCATION. INSTALL A FASTENER THAT IS THE SAME TYPE AS THE INITIAL FASTENER WITH THE SAME DIAMETER.

REPAIR MATERIAL			
PART		QTY	MATERIAL
1	REPAIR ANGLE	1	2024-T3 CLAD SHEET 0.10 THICK B

TABLE I

BS 178 Bulkhead - Side Chord Time Limited Repair at WL 212
Figure 6 (Sheet 3)

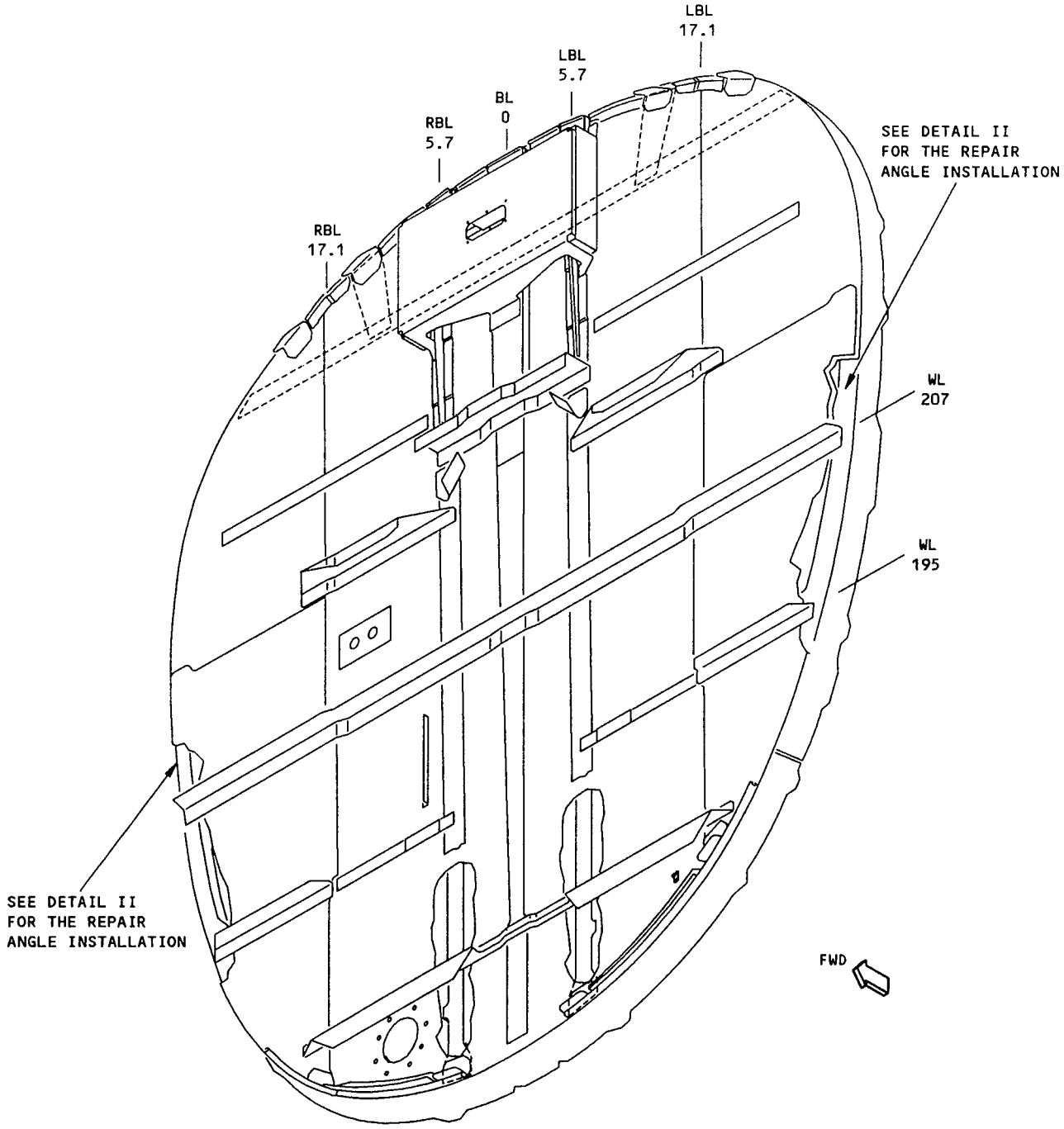

BODY STATION 178 BULKHEAD

DETAIL I

BS 178 Bulkhead - Side Chord Time Limited Repair at WL 212
Figure 6 (Sheet 4)

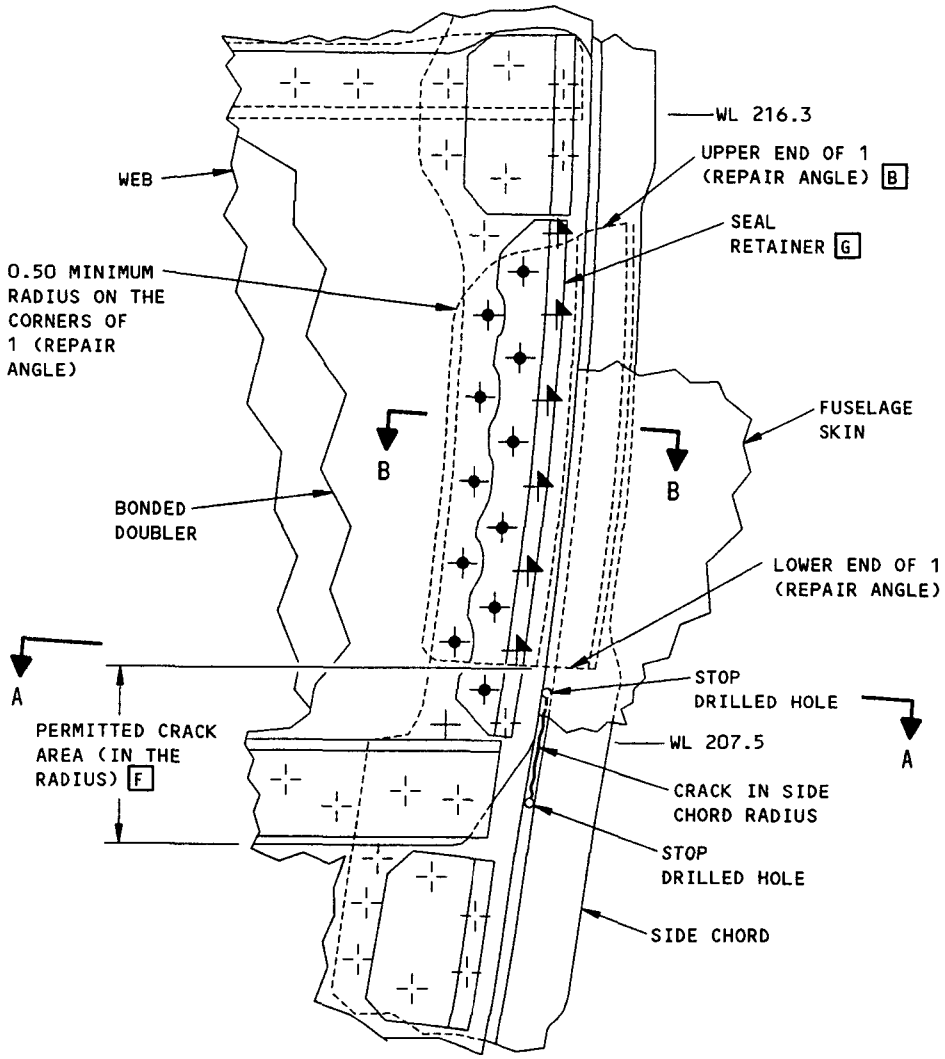

FRONT VIEW

REPAIR ANGLE INSTALLATION
DETAIL II

BS 178 Bulkhead - Side Chord Time Limited Repair at WL 212
Figure 6 (Sheet 5)

BOEING PROPRIETARY - Copyright © - Unpublished Work - See title page for details.

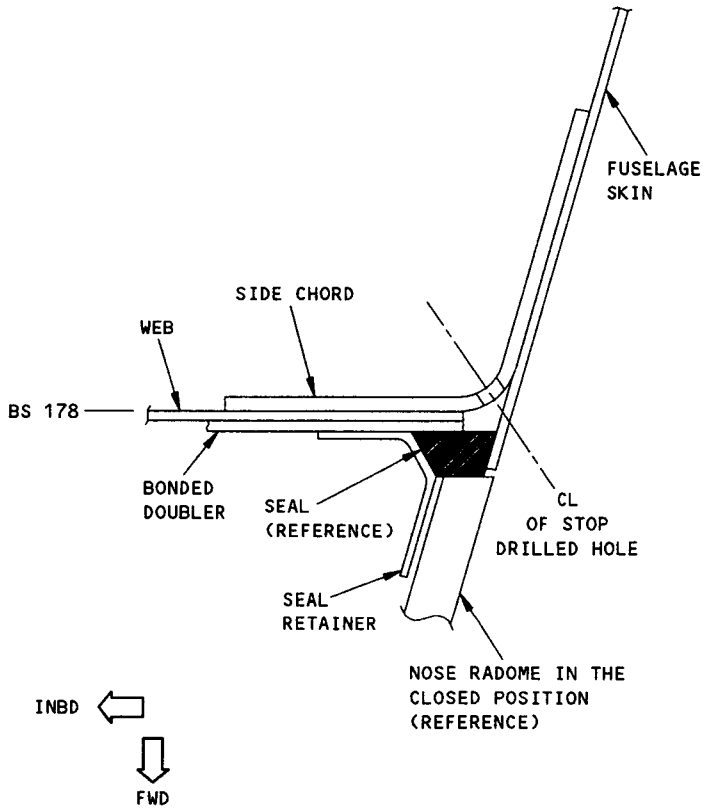

LOCATION OF STOP-DRILLED HOLE

SECTION A-A

BS 178 Bulkhead - Side Chord Time Limited Repair at WL 212
Figure 6 (Sheet 6)

BOEING PROPRIETARY - Copyright © - Unpublished Work - See title page for details.

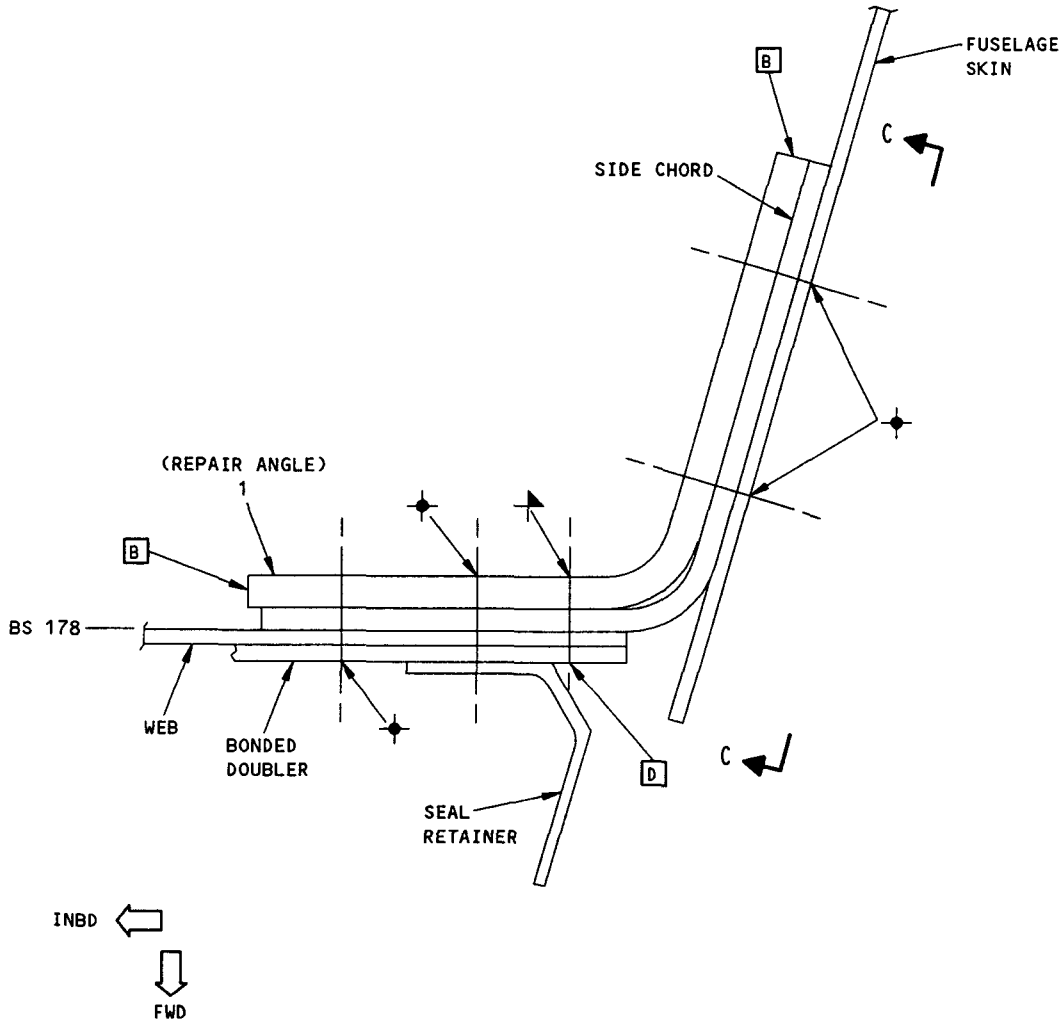

SECTION THROUGH THE REPAIR

SECTION B-B

BS 178 Bulkhead - Side Chord Time Limited Repair at WL 212
Figure 6 (Sheet 7)

BOEING PROPRIETARY - Copyright © - Unpublished Work - See title page for details.

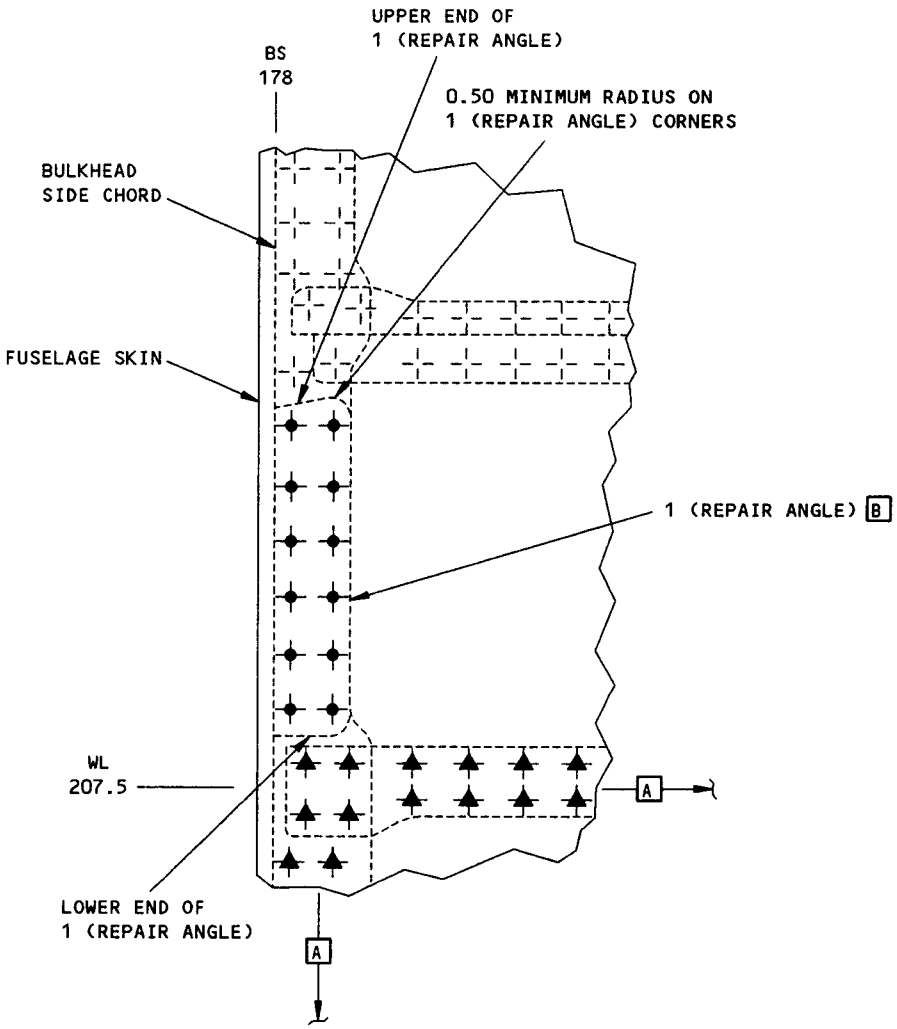

VIEW C-C

BS 178 Bulkhead - Side Chord Time Limited Repair at WL 212
Figure 6 (Sheet 8)

BOEING PROPRIETARY - Copyright © - Unpublished Work - See title page for details.

APPLICABILITY

THIS REPAIR IS FOR WL 195 INTERCOSTALS THAT WERE INITIALLY ATTACHED TO THE LOWER CHORD OF THE BL 24.67 FLOOR BEAM. AS AN ALTERNATIVE, YOU CAN INSTALL A NEW INTERCOSTAL THAT DOES NOT ATTACH TO THE FLOOR BEAM. [C]

REPAIR INSTRUCTIONS

1. Get access to the repair area. See Detail I.
2. Remove the fasteners at the ✦ locations, and remove the WL 195 intercostal. See View A-A and Section B-B. [A]
3. If the intercostal was attached to the floor beam and has a crack as shown in Section B-B, remove intercostal material in the shaded area of Section B-B.
4. Make sure there are no cracks in the intercostal at the edges of the cut. Do a high frequency eddy current (HFEC) inspection along the cut edges of the intercostal. Refer to NDT, Part 6, 51-00-00.
5. Make the repair parts. See Section C-C, Section D-D, and Table I.
6. Assemble the repair parts and the WL 195 intercostal. Drill the fastener holes.
7. Disassemble the repair parts.
8. Remove the WL 195 intercostal.
9. Remove the nicks, scratches, gouges, burrs, and sharp edges from the repair parts and the initial structure.
10. Apply a chemical conversion coating to the repair parts and to the bare surfaces of the initial structure. Refer to SRM 51-10-2.
11. Apply one layer of BMS 10-11, Type I primer to the repair parts and to the bare surfaces of the initial structure. Refer to SOPM 20-41-02.
12. Install the repair parts and the WL 195 intercostal with BMS 5-95 sealant on the mating surfaces. Put BMS 5-95 sealant in the clearances between the parts.
13. Install the fasteners.
14. Apply one layer of BMS 3-23 or BMS 3-29 corrosion inhibiting compound to the repair area.
15. Close access to the repair area.

NOTES

- THIS REPAIR WILL NOT HAVE AN EFFECT ON THE STRUCTURALLY SIGNIFICANT ITEMS GIVEN IN SRM 51-00-4, FIGURE 3. THUS, NO CHANGE TO THE SUPPLEMENTAL STRUCTURAL INSPECTION DOCUMENT (SSID) INSPECTION PROGRAM IS NECESSARY.
- D = THE DIAMETER OF THE FASTENER.
- ALL DIMENSIONS ARE IN INCHES, UNLESS DIFFERENTLY SPECIFIED.
- EDGE MARGINS MUST BE A MINIMUM OF 1.7D IN THE REPAIR ANGLE, UNLESS DIFFERENTLY SPECIFIED.
- KEEP A 4D TO 6D DISTANCE BETWEEN REPAIR FASTENERS.
- THIS INSTALLATION IS APPLICABLE TO THE LEFT SIDE AND THE RIGHT SIDE OF THE AIRPLANE.
- USE SHIMS AS NECESSARY TO KEEP THE GAPS 0.010 INCH OR LESS BEFORE YOU INSTALL THE FASTENERS.
- WHEN YOU USE THIS REPAIR, REFER TO:
  - AMM 51-21 FOR INTERIOR AND EXTERIOR FINISHES
  - AMM 51-31 FOR SEALS AND SEALING
  - BAC5602 OR MIL-H-6088 FOR HEAT TREATMENT OF ALUMINUM ALLOYS
  - NDT PART 6, 51-00-00 FOR THE EDDY CURRENT PROCEDURES FOR GENERAL STRUCTURES
  - SOPM 20-41-02 FOR APPLICATION OF CHEMICAL AND SOLVENT RESISTANT FINISHES
  - SRM 51-10-1 FOR INSPECTION AND REMOVAL OF DAMAGE
  - SRM 51-10-2 FOR PROTECTIVE TREATMENT OF METALLIC AND GRAPHITE MATERIALS
  - SRM 51-20-4 FOR REPAIR SEALING
  - SRM 51-20-1 FOR FORMING OF SHEET METAL MATERIALS
  - SRM 51-30 FOR FASTENER CODE, INSTALLATION AND REMOVAL, HOLE SIZES, AND EDGE MARGINS.

[A] THE WL 195 INTERCOSTAL WAS INITIALLY ATTACHED TO THE FLOOR BEAM LOWER CHORD ON SOME AIRPLANES.

[B] BEND THE REPAIR ANGLE AS GIVEN IN SRM 51-20-1 BEFORE YOU HEAT TREAT THE REPAIR ANGLE. HEAT TREAT THE REPAIR ANGLE TO THE -T42 CONDITION BEFORE YOU INSTALL THE REPAIR ANGLE.

[C] IT IS NOT NECESSARY TO REPAIR OR REPLACE THE WL 195 INTERCOSTAL IF YOU CAN REMOVE THE FORWARD END OF THE INTERCOSTAL (WITH THE LIMITS GIVEN IN THE ALLOWABLE DAMAGE SUBJECT IN SRM 53-10-1.

[D] CUT THE INTERCOSTAL AT THE MIDDLE OF THE JOGGLE.

[E] MAKE SURE THE END OF THE REPAIR ANGLE IS 0.06 INCH FROM THE TANGENT POINT OF THE SIDE CHORD INNER RADIUS.

BS 178 Bulkhead Installation - WL 195 Intercostal Repair
Figure 7 (Sheet 1)

BOEING PROPRIETARY - Copyright © - Unpublished Work - See title page for details.

FASTENER SYMBOLS

- REFERENCE FASTENER LOCATION.
- REPAIR FASTENER LOCATION. INSTALL A BACR15FT6D RIVET.
- INITIAL FASTENER LOCATION. INSTALL A FASTENER THAT IS THE SAME TYPE AS THE INITIAL FASTENER WITH THE SAME DIAMETER.

REPAIR MATERIAL			
PART		QTY	MATERIAL
1	FILLER	1	CLAD 2024-T3 SHEET, 0.040 THICK
2	REPAIR ANGLE	1	CLAD 2024-0 SHEET, 0.063 THICK B
3	RADIUS FILLER	1	CLAD 2024-T3 SHEET, 0.125 THICK

TABLE I

BS 178 Bulkhead Installation - WL 195 Intercostal Repair
Figure 7 (Sheet 2)

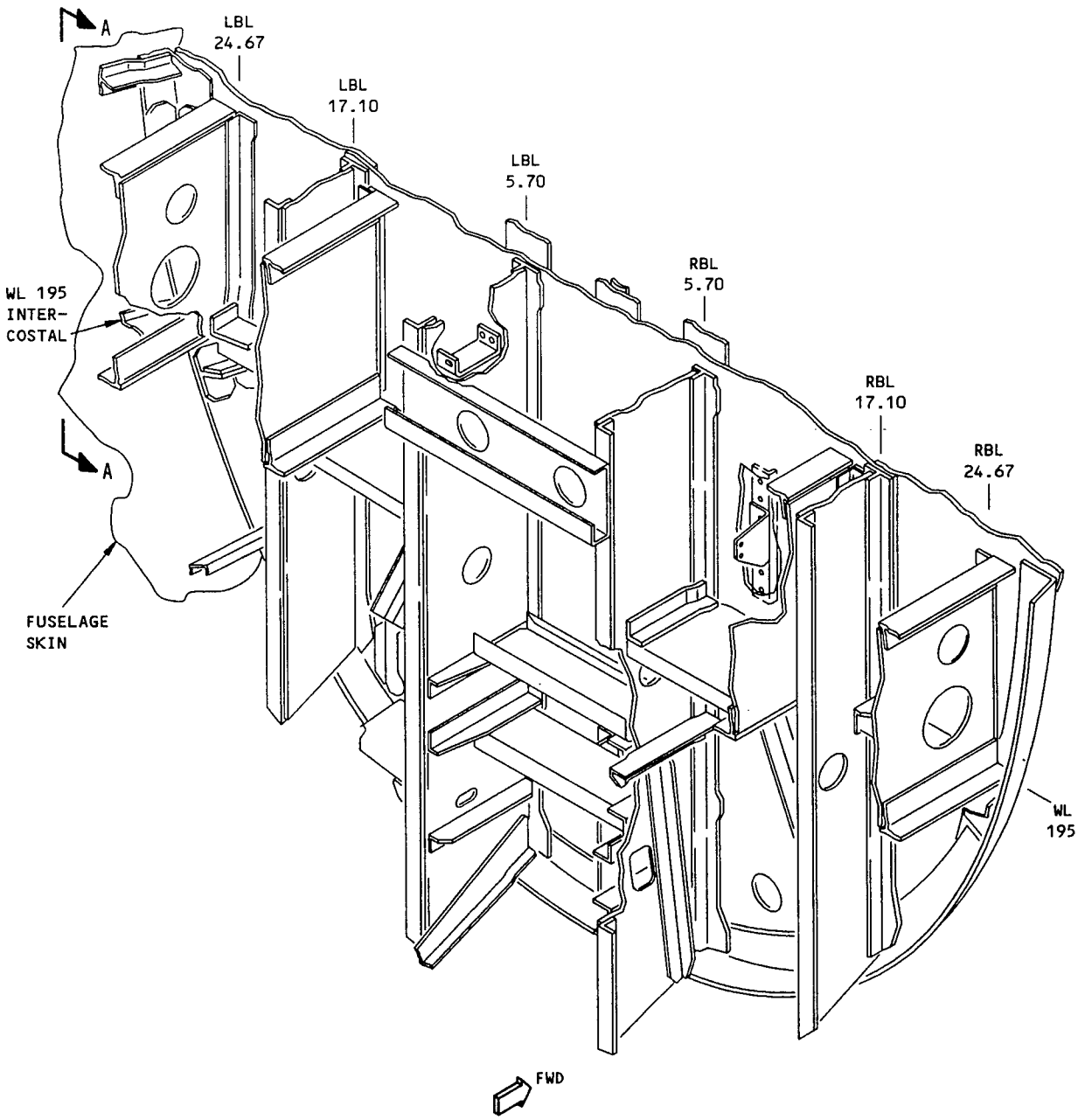

BODY STATION 178 BULKHEAD BELOW WL 207

REAR VIEW

DETAIL I

BS 178 Bulkhead Installation - WL 195 Intercostal Repair
Figure 7 (Sheet 3)

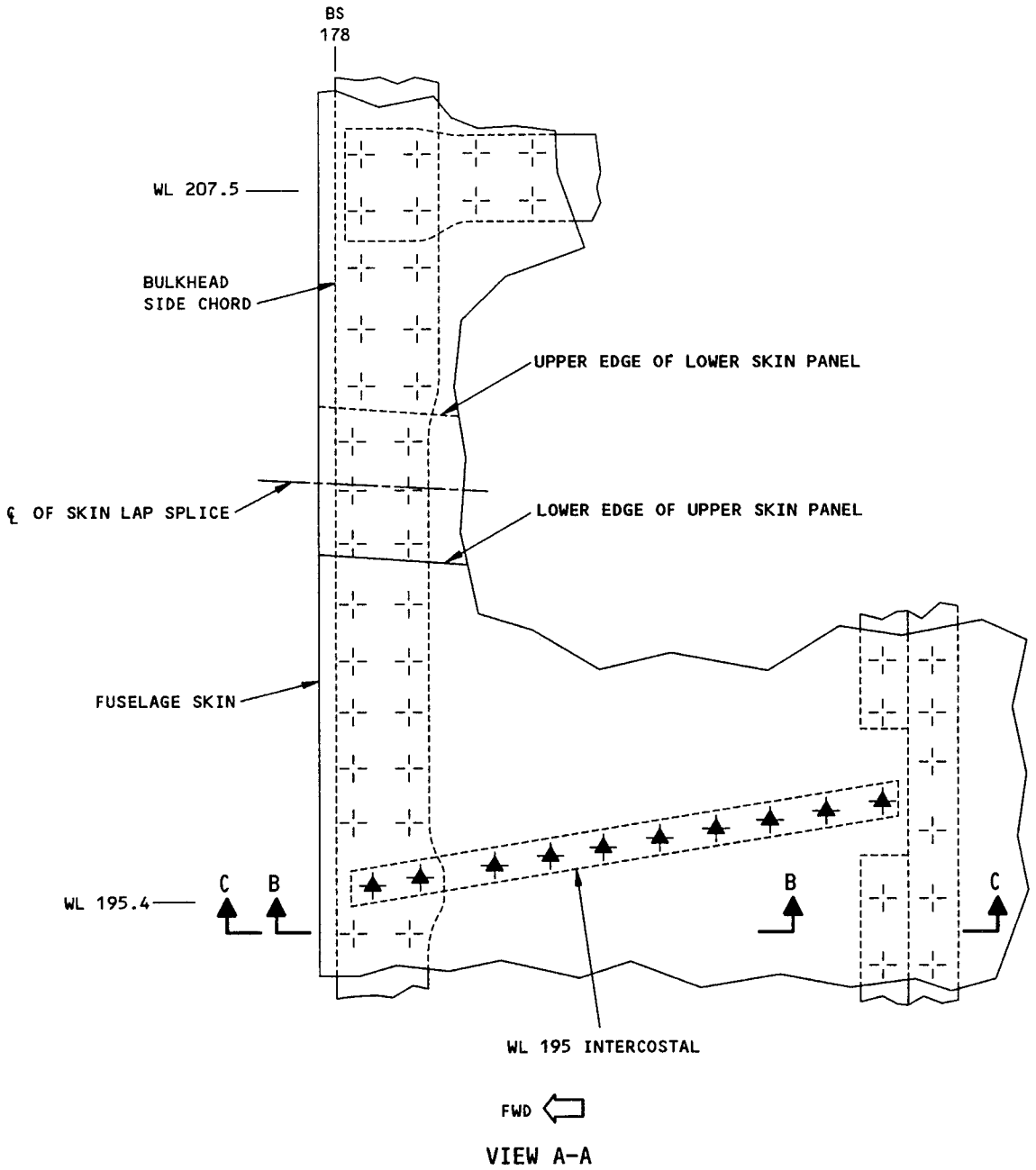

VIEW A-A

BS 178 Bulkhead Installation - WL 195 Intercostal Repair
Figure 7 (Sheet 4)

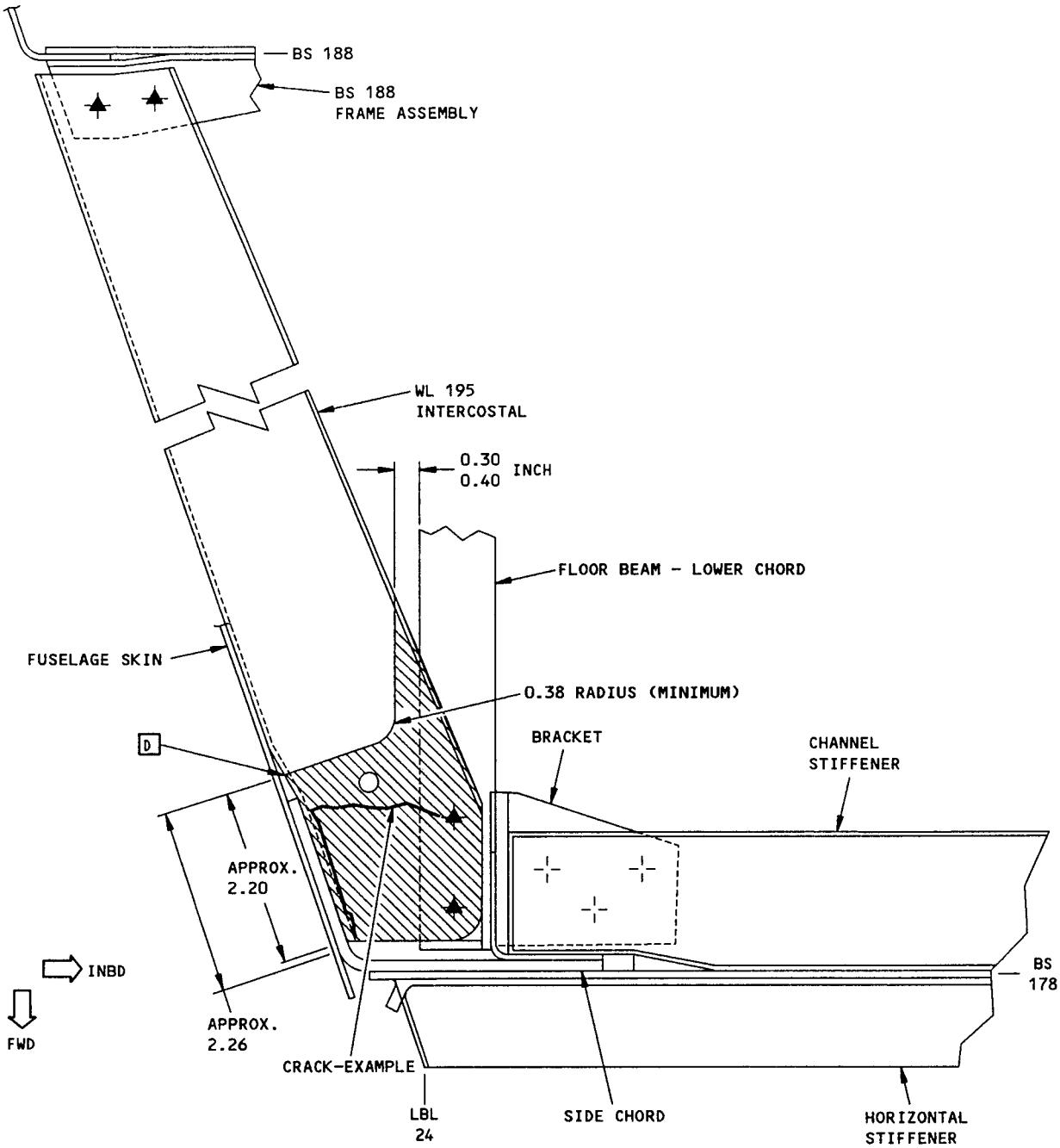

WL 195 INTERCOSTAL (WITH A CRACK) INITIALLY ATTACHED TO FLOOR BEAM A C

LEFT SIDE SHOWN, RIGHT SIDE OPPOSITE

SECTION B-B

BS 178 Bulkhead Installation - Wl 195 Intercostal Repair
Figure 7 (Sheet 5)

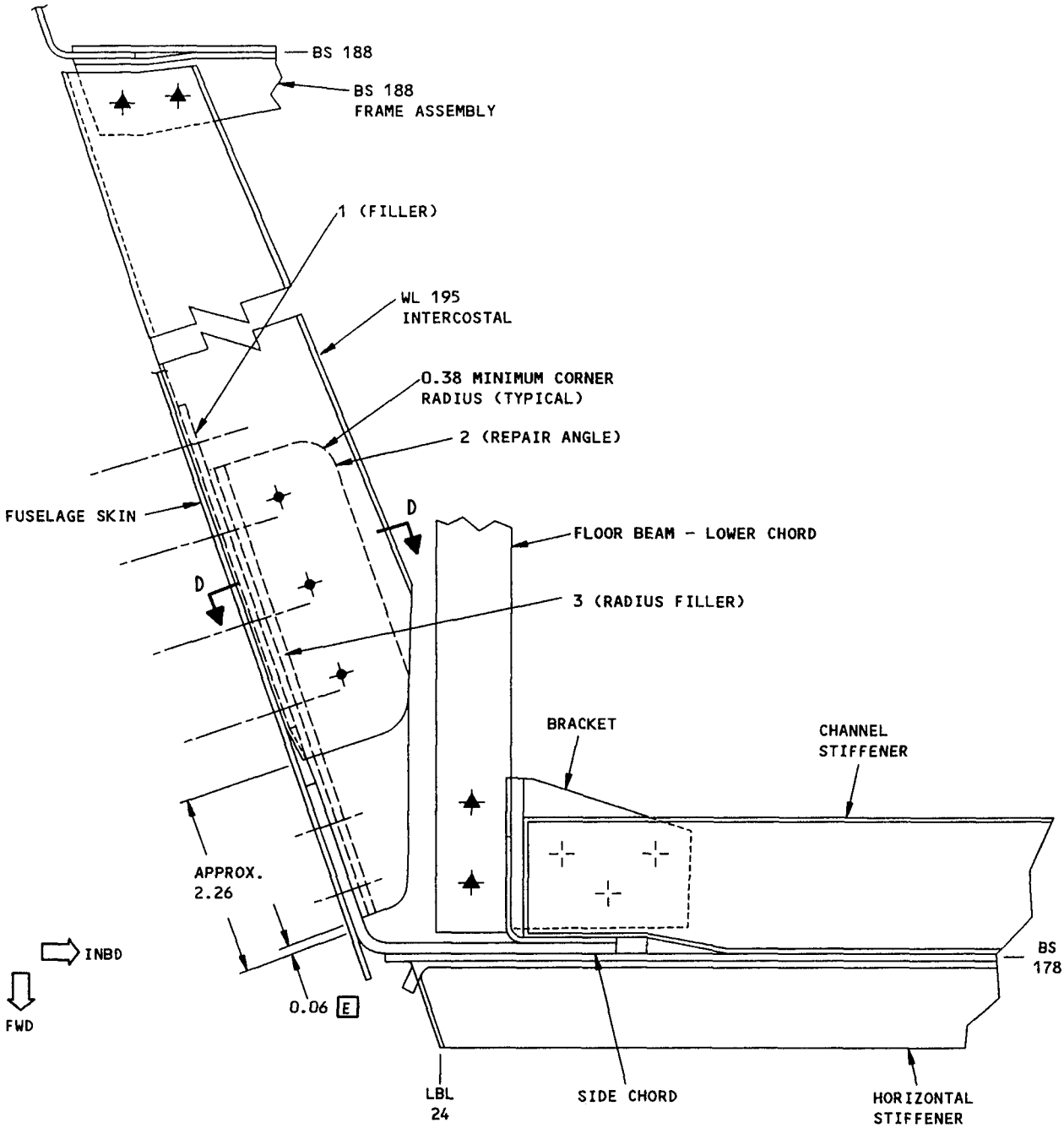

WL 195 INTERCOSTAL REPAIR INSTALLATION C

LEFT SIDE SHOWN, RIGHT SIDE OPPOSITE

SECTION C-C

BS 178 Bulkhead Installation - Wl 195 Intercostal Repair
Figure 7 (Sheet 6)

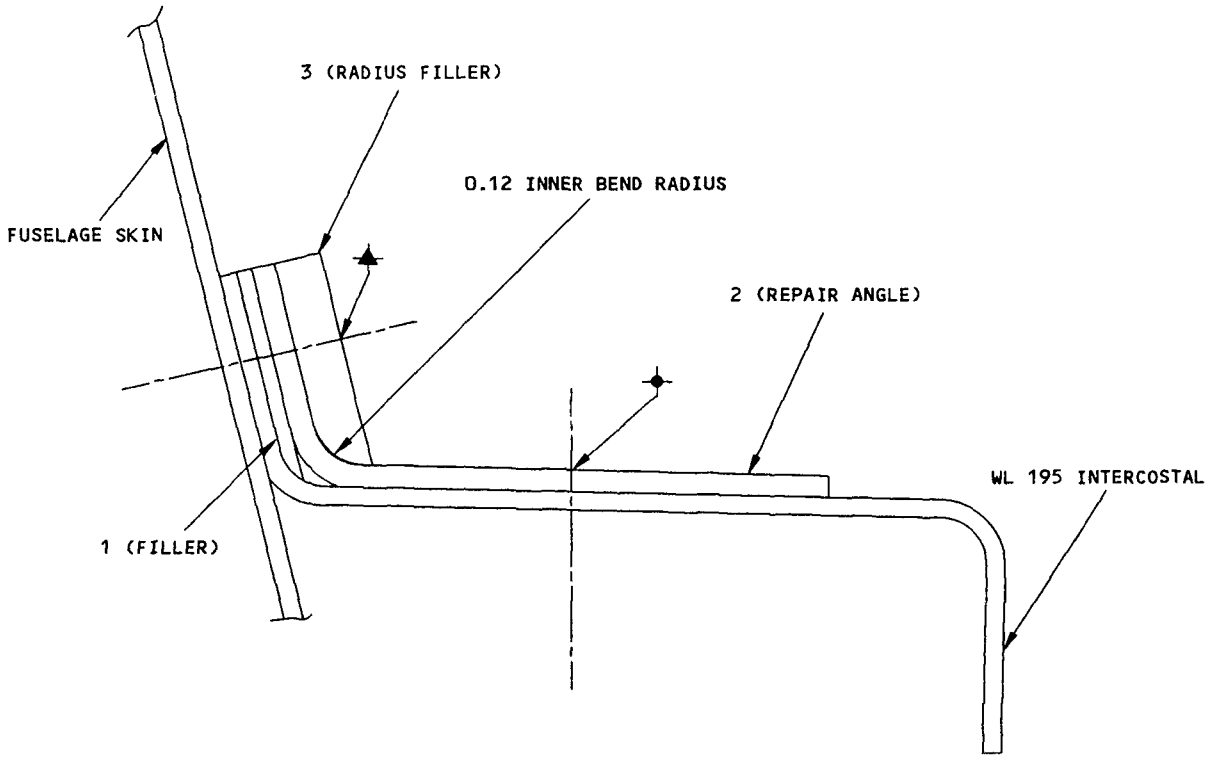

SECTION D-D [C]

BS 178 Bulkhead Installation - Wl 195 Intercostal Repair
Figure 7 (Sheet 7)

APPLICABILITY
THIS FIGURE IS FOR THE REPAIR OF AIRPLANES THAT DID NOT HAVE REINFORCING ANGLES INSTALLED IN THE FACTORY. REFER TO SB 737-53A1173 FOR THE INSPECTION PROCEDURES AND THE PREVENTATIVE CHANGE.

REPAIR INSTRUCTIONS

1. Get access to the forward side of the bulkhead. See Detail I.
2. Get access to the aft side of the bulkhead below WL 207.
3. Remove systems components as applicable to get access to each damaged BL 5.7 vertical beam. Refer to Part VIII of SB 737-53A1173.
4. Examine each BL 5.7 vertical beam forward chord for damage. See Detail II for examples of crack locations.
5. Refer to Detail III for the repair area with pulley brackets and other systems components removed.
6. Disconnect the turnbuckle from the gear housing as given in Figure 29 of SB 737-53A1173. See Sections A-A and B-B.
7. If the LBL 5.7 beam is damaged, remove the initial angle and the initial filler shown in View C-C and Section D-D.
8. If the RBL 5.7 beam is damaged, remove the forward LGV bracket and the bracket support. See Section I-I.
9. Remove the applicable stiffeners and support angles that are attached to the aft leg of the forward chord.
10. Remove the initial fasteners through the forward chord from approximately WL 177 to approximately WL 195. Remove a sufficient number of fasteners to permit the forward chord to be separated from the adjacent structure.

WARNING: WEAR PROTECTIVE CLOTHING AND EYE PROTECTION WHEN YOU USE SOLID CARBON DIOXIDE (DRY ICE). MAKE SURE YOU HAVE SUFFICIENT VENTILATION AND DO NOT USE DRY ICE IN AN ENCLOSED SPACE. DRY ICE CAN INJURE YOUR SKIN OR CAUSE BREATHING PROBLEMS.

CAUTION: USE SPECIAL CARE TO CUT AND REMOVE THE DAMAGED AREA OF THE FORWARD CHORD. DO NOT GOUGE, SCRATCH, OR BUCKLE THE STRUCTURE ADJACENT TO THE CUTOUT. IF YOU DAMAGE THE ADJACENT STRUCTURE, MORE REPAIR WORK WILL BE NECESSARY.

11. If the chord forward flange is damaged, carefully drive nylon or hardwood wedges between the forward flange and the bulkhead web near the damage area. Use a sufficient number of wedges to gradually separate the parts and prevent buckling.

    NOTE: To help separate the sealed parts, cold soak the area with solid carbon dioxide (dry ice) for approximately 30 minutes before you use the wedges. Use dry ice only on the forward side of the bulkhead adjacent to the chord forward flange.

12. Carefully cut out the damaged areas of the forward flange as shown in Detail IV and Section G-G. Use a thin steel sheet between the chord and the bulkhead web at the crack locations to prevent damage to the bulkhead web.
13. Remove the steel sheet.
14. Make sure there are no cracks in the chord at the edges of the cutouts. Do a high frequency eddy current (HFEC) inspection along the cut edges of the chord. Refer to NDT, Part 6, 51-00-00.
15. Remove 0.04 inch more material from the edge of the cutout.
16. Remove the wedges.
17. Make or get the repair parts. See Table I, Table II, Detail V, and Detail VI.
18. Assemble the aluminum repair parts and the removed parts that must be reinstalled.

CAUTION: DO NOT BACK DRILL THROUGH THE STEEL REPAIR PARTS. THE STEEL SHAVINGS CAN CAUSE DAMAGE TO THE HOLES IN THE ALUMINUM PARTS. USE ANOTHER PROCEDURE TO DRILL THE HOLES THROUGH THE STEEL REPAIR PARTS, SUCH AS THE HOLE-LOCATING TEMPLATE PROCEDURE.

19. Drill the fastener holes through the aluminum repair parts.

BS 178 Bulkhead - Repair of the LBL 5.7 or RBL 5.7
Vertical Beam Forward Chord Below WL 190
Figure 8 (Sheet 1)

REPAIR INSTRUCTIONS (CONT)

20. Disassemble the parts.
21. Drill the fastener holes through the steel repair parts.
22. Remove the nicks, scratches, gouges, burrs, and sharp edges from the repair parts and the initial structure.
23. Apply a chemical conversion coating to the aluminum repair parts and to the bare surfaces of the initial structure. Refer to SRM 51-10-2.
24. Cadmium plate the steel repair parts. Refer to SRM 51-10-2.
25. Apply one layer of BMS 10-11, Type I primer to the repair parts and to the bare surfaces of the initial structure. Refer to SOPM 20-41-02.
26. Install repair washers in the countersink holes that will be behind the repair parts.
27. Install the repair parts and the removed parts that must be reinstalled with BMS 5-95 sealant on the mating surfaces. Put BMS 5-95 sealant in the clearances between the parts.
28. Install the fasteners. Install the hex drive bolts wet with BMS 5-95 sealant. Refer to SRM 51-30-5.
29. Apply one layer of BMS 10-11, Type I primer to the repair area. Refer to SOPM 20-41-02.
30. Apply one layer of BMS 10-11, Type II enamel to the repair area. Refer to SOPM 20-41-02.
31. Apply one layer of BMS 3-23 or BMS 3-29 corrosion inhibiting compound to the repair area.
32. Connect the turnbuckle to the gear housing as given in Figure 29 of SB 737-53A1173.
33. Reinstall applicable systems components as given in Part VIII of SB 737-53A1173. Refer to the maintenance manual procedures given in the Service Bulletin.
34. Close access to the repair area as given in Part VIII of SB 737-53A1173.

NOTES

- THIS REPAIR WILL NOT HAVE AN EFFECT ON THE STRUCTURALLY SIGNIFICANT ITEMS GIVEN IN SRM 51-00-4, FIGURE 3. THUS, NO CHANGE TO THE SUPPLEMENTAL STRUCTURAL INSPECTION DOCUMENT (SSID) INSPECTION PROGRAM IS NECESSARY.
- ALL DIMENSIONS ARE IN INCHES, UNLESS GIVEN DIFFERENTLY.
- USE SHIMS AND TAPERED FILLERS AS NECESSARY TO KEEP THE GAPS 0.010 INCH OR LESS BEFORE YOU INSTALL THE FASTENERS THAT ATTACH ALUMINUM PARTS.
- USE SHIMS AND TAPERED FILLERS AS NECESSARY TO KEEP THE GAPS 0.005 INCH OR LESS BEFORE YOU INSTALL THE FASTENERS THAT ATTACH STEEL PARTS.
- D = THE FASTENER DIAMETER
- EDGE MARGINS MUST BE A MINIMUM OF 1.7D IN THE REPAIR PARTS AND THE INITIAL STRUCTURE UNLESS GIVEN DIFFERENTLY. MAKE SURE YOU KEEP THIS EDGE MARGIN WHEN YOU OVERSIZE A FASTENER HOLE.
- WHEN YOU USE THIS REPAIR REFER TO:
  - AMM 51-21 FOR INTERIOR AND EXTERIOR FINISHES
  - AMM 51-31 FOR SEALS AND SEALING
  - NDT PART 6, 51-00-00 FOR THE EDDY CURRENT PROCEDURES OF GENERAL STRUCTURES
  - SOPM 20-41-02 FOR APPLICATION OF FINISHES
  - SRM 51-10-1 FOR INVESTIGATION AND CLEANUP OF DAMAGE AND SMOOTHNESS OF MACHINED SURFACES
  - SRM 51-10-2 FOR PROTECTIVE TREATMENT OF METAL
  - SRM 51-20-4 FOR REPAIR SEALING
  - SRM 51-30 FOR FASTENER CODE, REMOVAL AND INSTALLATION, HOLE SIZES AND EDGE MARGINS
  - SRM 51-30-5 FOR TRANSITION FIT HOLES AND CLOSE REAMED HOLES
  - SRM 51-30 FOR COUNTERSINKING OF HOLES AND COUNTERSINK REPAIR WASHERS.

[A] REMOVE THIS PART. REINSTALL THE PART AFTER YOU INSTALL THE STEEL REPAIR PARTS.

[B] REMOVE AND DISCARD THE INITIAL PART.

[C] YOU CAN GET A KIT OF REPAIR PARTS FROM THE BOEING SPARE PARTS DEPARTMENT. KIT NUMBER 65C37607-27 IS FOR THE LBL 5.7 BEAM REPAIR. KIT NUMBER 65C37607-28 IS FOR THE RBL 5.7 BEAM REPAIR.

[D] INSTALL THE NEW BLANK PART AFTER YOU INSTALL THE STEEL REPAIR PARTS.

[E] IF NECESSARY, REMOVE MATERIAL FROM THE FORWARD END TO GET A CLEARANCE BETWEEN THIS PART AND THE STEEL REPAIR PARTS.

[F] MAKE THE NEW BLANK PART WITH THE SAME DIMENSIONS AND GEOMETRY AS THE INITIAL PART.

BS 178 Bulkhead - Repair of the LBL 5.7 or RBL 5.7
Vertical Beam Forward Chord Below WL 190
Figure 8 (Sheet 2)

BOEING PROPRIETARY - Copyright © - Unpublished Work - See title page for details.

NOTES (Cont)

[G] SHIM AS NECESSARY TO KEEP THE PULLEY BRACKET IN ITS INITIAL POSITION.

[H] REMOVE MATERIAL FROM THE LOWER END OF EACH STEEL REPAIR STRAP AS NECESSARY TO GET THE CORRECT FIT.

[I] INSTALL THE STAGGERED RUNOUT AREA OF THE REPAIR AT THE SAME LOCATION ON ALL REPAIRS (FOR ALL DAMAGE DIMENSIONS).

[J] IF THERE IS DAMAGE IN THIS AREA, YOU CAN CUT OUT ALL OF THE FORWARD FLANGE.

[K] SEE DETAIL IV FOR TYPICAL DAMAGE CUTOUT. CUT OUT THE MINIMUM QUANTITY OF MATERIAL NECESSARY TO REMOVE THE DAMAGE.

[L] THIS IS AN INITIAL FASTENER LOCATION ON SOME AIRPLANES.

[M] IF NECESSARY, REMOVE MATERIAL FROM THE STEEL REPAIR STRAPS NEAR THE FORWARD END OF APPLICABLE VERTICAL BEAM STIFFENERS AND SUPPORT ANGLES AS SHOWN. KEEP A MINIMUM STRAP THICKNESS OF 0.071 AT THESE LOCATIONS. KEEP A MINIMUM END MARGIN OF 1.5D IN THE BEAM STIFFENERS, THE SUPPORT ANGLES, AND THE PULLEY BRACKET SUPPORT STRUCTURE. IF YOU CANNOT KEEP THE MINIMUM END MARGIN, TELL BOEING.

[N] IF NECESSARY, REMOVE MATERIAL FROM THE EDGE OF THE CLIP TO GET A CLEARANCE.

[O] FOR CUM LINE NUMBERS 1 THROUGH 1585.

[P] MAKE SURE THE LONGITUDINAL GRAIN IS PARALLEL TO THE LENGTH OF THE PART. MAKE SURE THE LONG TRANSVERSE GRAIN IS PARALLEL TO THE WIDTH OF THE PART. MAKE SURE THE SHORT TRANSVERSE GRAIN IS PERPENDICULAR TO BOTH THE LENGTH AND THE WIDTH OF THE PART (THROUGH THE THICKNESS).

[Q] MAKE SURE THE LONG TRANSVERSE GRAIN IS PARALLEL TO THE LENGTH OF THE PART. MAKE SURE THE LONGITUDINAL GRAIN DIRECTION IS PARALLEL TO THE WIDTH OF THE PART. MAKE SURE THE SHORT TRANSVERSE GRAIN IS PERPENDICULAR TO BOTH THE LENGTH AND THE WIDTH OF THE PART (THROUGH THE THICKNESS).

[R] YOU CAN GET THESE PARTS FROM THE BOEING COMPANY SPARES DEPARTMENT:

- USE PART NO. 69-87867-1 FOR PART NO. 1, 2, 21 AND 22 ANGLES
- USE PART NO. 69-87867-2 FOR PART NO. 3, 4, 23 AND 24 ANGLES
- USE PART NO. 69-87868-1 FOR PART NO. 5, 6, 25 AND 26 STRAPS
- USE PART NO. 65C37607-17 FOR PART NO. 14 ANGLE
- USE PART NO. 65C37607-18 FOR PART NO. 32 ANGLE.

FASTENER SYMBOLS

REFERENCE FASTENER LOCATION.

INITIAL FASTENER LOCATION. INSTALL A BACB30VT6K() HEX DRIVE BOLT WITH A BACC30BL COLLAR.

INITIAL FASTENER LOCATION. INSTALL A BACB30NX6K()Y HEX DRIVE BOLT WITH A BACC30AC COLLAR.

INITIAL FASTENER LOCATION. INSTALL A BACB30NW6K()Y HEX DRIVE BOLT WITH A BACC30R COLLAR.

INITIAL FASTENER LOCATION. INSTALL A BACB30NX6K()X HEX DRIVE BOLT WITH A BACC30X COLLAR.

INITIAL FASTENER LOCATION. INSTALL A BACB30VU6K() HEX DRIVE BOLT WITH A BACC30BL COLLAR.

INITIAL FASTENER LOCATION. ON AIRPLANES CHANGED WITH SERVICE BULLETIN 737-34-1139, INSTALL A BACB30NX6K()Y HEX DRIVE BOLT WITH A BACC30AC COLLAR. ON ALL OTHER AIRPLANES, INSTALL A BACB30VT6K() HEX DRIVE BOLT WITH A BACC30BL COLLAR.

INITIAL FASTENER LOCATION. INSTALL A BACB30NX6K()X HEX DRIVE BOLT WITH A BACC30X COLLAR.

BS 178 Bulkhead - Repair of the LBL 5.7 or RBL 5.7
Vertical Beam Forward Chord Below WL 190
Figure 8 (Sheet 3)

BOEING PROPRIETARY - Copyright © - Unpublished Work - See title page for details.

REPAIR MATERIAL FOR LBL 5.7 BEAM			
PART		QTY	MATERIAL
1	ANGLE	1	0.032 THICK 15-5PH HEAT TREAT TO 150-170 KSI CONDITION (RECOMMENDED), OR 0.032 CRES 301 1/2 HARD, LENGTH - 14.0 [Q] [R]
2	ANGLE	1	0.032 THICK 15-5PH HEAT TREAT TO 150-170 KSI CONDITION (RECOMMENDED), OR 0.032 CRES 301 1/2 HARD, LENGTH = 16.0 [Q] [R]
3	ANGLE	1	0.040 THICK 15-5PH HEAT TREAT TO 150-170 KSI CONDITION (RECOMMENDED), OR 0.040 CRES 301 1/2 HARD, LENGTH = 13.0 [Q] [R]
4	ANGLE	1	0.040 THICK 15-5PH HEAT TREAT TO 150-170 KSI CONDITION (RECOMMENDED), OR 0.040 CRES 301 1/2 HARD, LENGTH = 15.0 [Q] [R]
5	STRAP	1	0.125 THICK 15-5PH HEAT TREAT TO 150-170 KSI CONDITION (RECOMMENDED), OR 0.125 CRES 301 1/2 HARD [P] [R]
6	STRAP	1	0.125 THICK 15-5PH HEAT TREAT TO 150-170 KSI CONDITION (RECOMMENDED), OR 0.125 CRES 301 1/2 HARD [P] [R]
7	ANGLE	1	BOEING PART NUMBER 65C37607-16
8	FILLER	1	BACF3F008M044NN
9	FILLER	1	7075-T6 CLAD SHEET, 0.071 THICK
10	FILLER	1	7075-T6 CLAD SHEET, 0.071 THICK
11	STIFFENER	1	BOEING PART NUMBER 65-17583-71
12	BRACKET	1	BOEING PART NUMBER 65C37607-15
13	FILLER	1	7075-T6 CLAD SHEET, 0.071 THICK
14	ANGLE	1	BAC1490-2711, 2024-T4 CLAD SHEET [F] [R]
15	FILLER - FWD FLANGE	(AS NECESSARY)	7075-T6 CLAD SHEET, SAME THICKNESS AS THE CHORD FORWARD FLANGE
16	FILLER - FWD FLANGE	(AS NECESSARY)	7075-T6 CLAD SHEET, SAME THICKNESS AS THE CHORD FORWARD FLANGE
17	RADIUS FILLER	1	BACF3H08JF013HG
18	FILLER	2	7075-T6 CLAD SHEET, 0.071 THICK
19	SHIM	(AS NECESSARY)	BACS40R009B010F LAMINATED ALUMINUM SHIM, OR AN EQUIVALENT

TABLE I [C]

BS 178 Bulkhead - Repair of the LBL 5.7 or RBL 5.7
Vertical Beam Forward Chord Below WL 190
Figure 8 (Sheet 4)

REPAIR MATERIAL FOR RBL 5.7 BEAM			
PART		QTY	MATERIAL
20	TAPERED FILLER	1	7075-T6 CLAD SHEET, 0.071 THICK AT THE UPPER END AND 0.01 THICK AT THE LOWER END
21	ANGLE	1	0.032 THICK 15-5PH HEAT TREAT TO 150-170 KSI CONDITION (RECOMMENDED), OR 0.032 CRES 301 1/2 HARD, LENGTH = 15.0 [Q] [R]
22	ANGLE	1	0.032 THICK 15-5PH HEAT TREAT TO 150-170 KSI CONDITION (RECOMMENDED), OR 0.032 CRES 301 1/2 HARD, LENGTH = 18.0 [Q] [R]
23	ANGLE	1	0.040 THICK 15-5PH HEAT TREAT TO 150-170 KSI CONDITION (RECOMMENDED), OR 0.040 CRES 301 1/2 HARD, LENGTH = 13.5 [Q] [R]
24	ANGLE	1	0.040 THICK 15-5PH HEAT TREAT TO 150-170 KSI CONDITION (RECOMMENDED), OR 0.040 CRES 301 1/2 HARD, LENGTH = 16.0 [Q] [R]
25	STRAP	1	0.125 THICK 15-5PH HEAT TREAT TO 150-170 KSI CONDITION (RECOMMENDED), OR 0.125 CRES 301 1/2 HARD [P] [R]
26	STRAP	1	0.125 THICK 15-5PH HEAT TREAT TO 150-170 KSI CONDITION (RECOMMENDED), OR 0.125 CRES 301 1/2 HARD [P] [R]
27	FILLER	2	BACF3F008K057NN
28	BRACKET	1	BOEING PART NUMBER 65C37607-14
29	STIFFENER	1	BOEING PART NUMBER 65-17583-70
30	FILLER	1	7075-T6 CLAD SHEET, 0.071 THICK
31	FILLER	1	7075-T6 CLAD SHEET, 0.071 THICK
32	ANGLE	1	BAC1490-2711, 2024-T4 CLAD SHEET [F] [R]
33	FILLER	1	7075-T6 CLAD SHEET, 0.071 THICK
34	FILLER - FWD FLANGE	(AS NECESSARY)	7075-T6 CLAD SHEET, SAME THICKNESS AS THE CHORD FORWARD FLANGE
35	FILLER - FWD FLANGE	(AS NECESSARY)	7075-T6 CLAD SHEET, SAME THICKNESS AS THE CHORD FORWARD FLANGE
36	FILLER	2	7075-T6 CLAD SHEET, 0.071 THICK
37	SHIM	(AS NECESSARY)	BACS40R009B010F LAMINATED ALUMINUM SHIM, OR AN EQUIVALENT
38	RADIUS FILLER	1	BAC1512-3365 X 1.6, 2024-T4 EXTRUSION

TABLE II [C]

BS 178 Bulkhead - Repair of the LBL 5.7 or RBL 5.7
Vertical Beam Forward Chord Below WL 190
Figure 8 (Sheet 5)

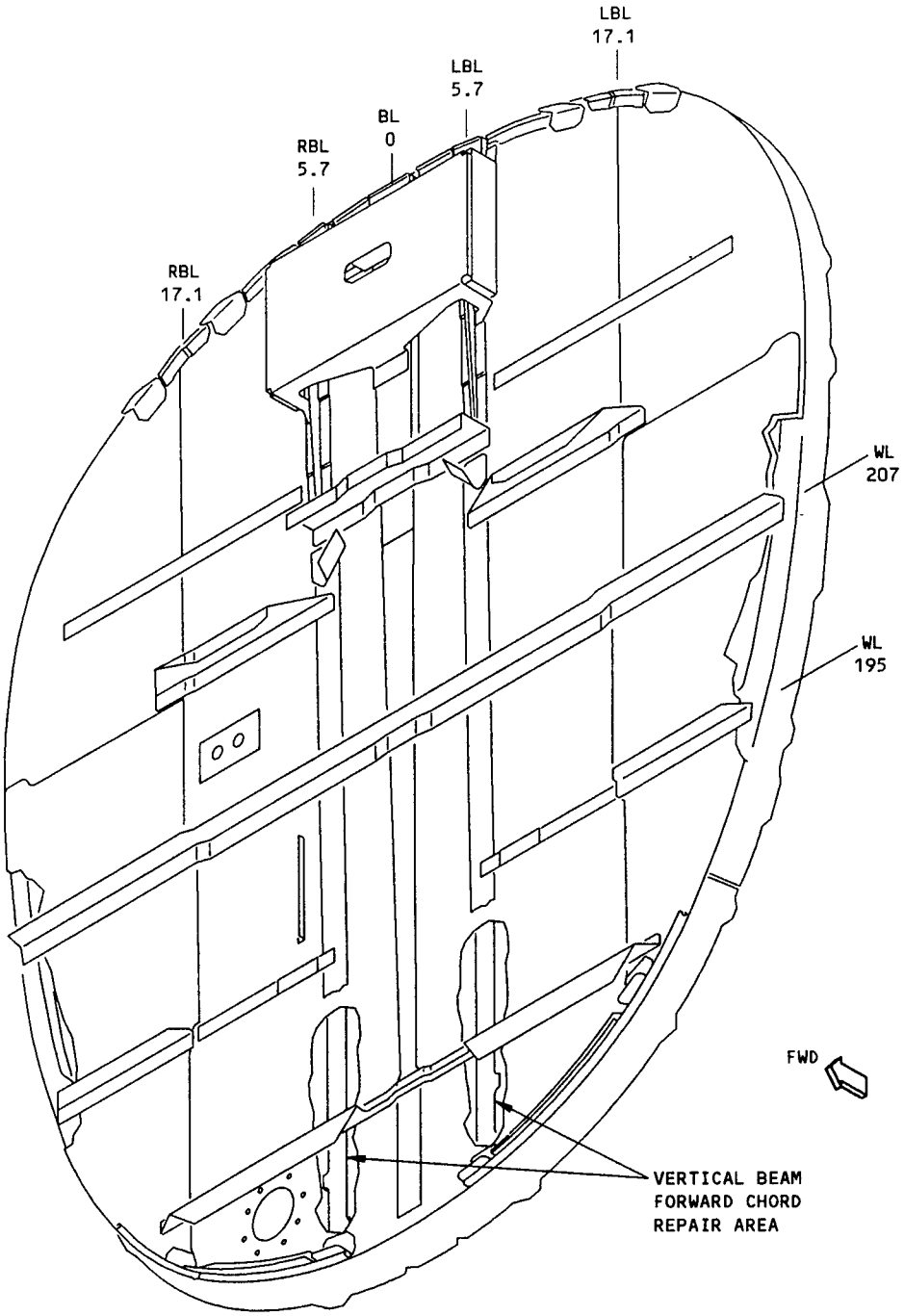

BS 178 BULKHEAD

FRONT VIEW

DETAIL I

BS 178 Bulkhead - Repair of the LBL 5.7 or RBL 5.7
Vertical Beam Forward Chord Below WL 190
Figure 8 (Sheet 6)

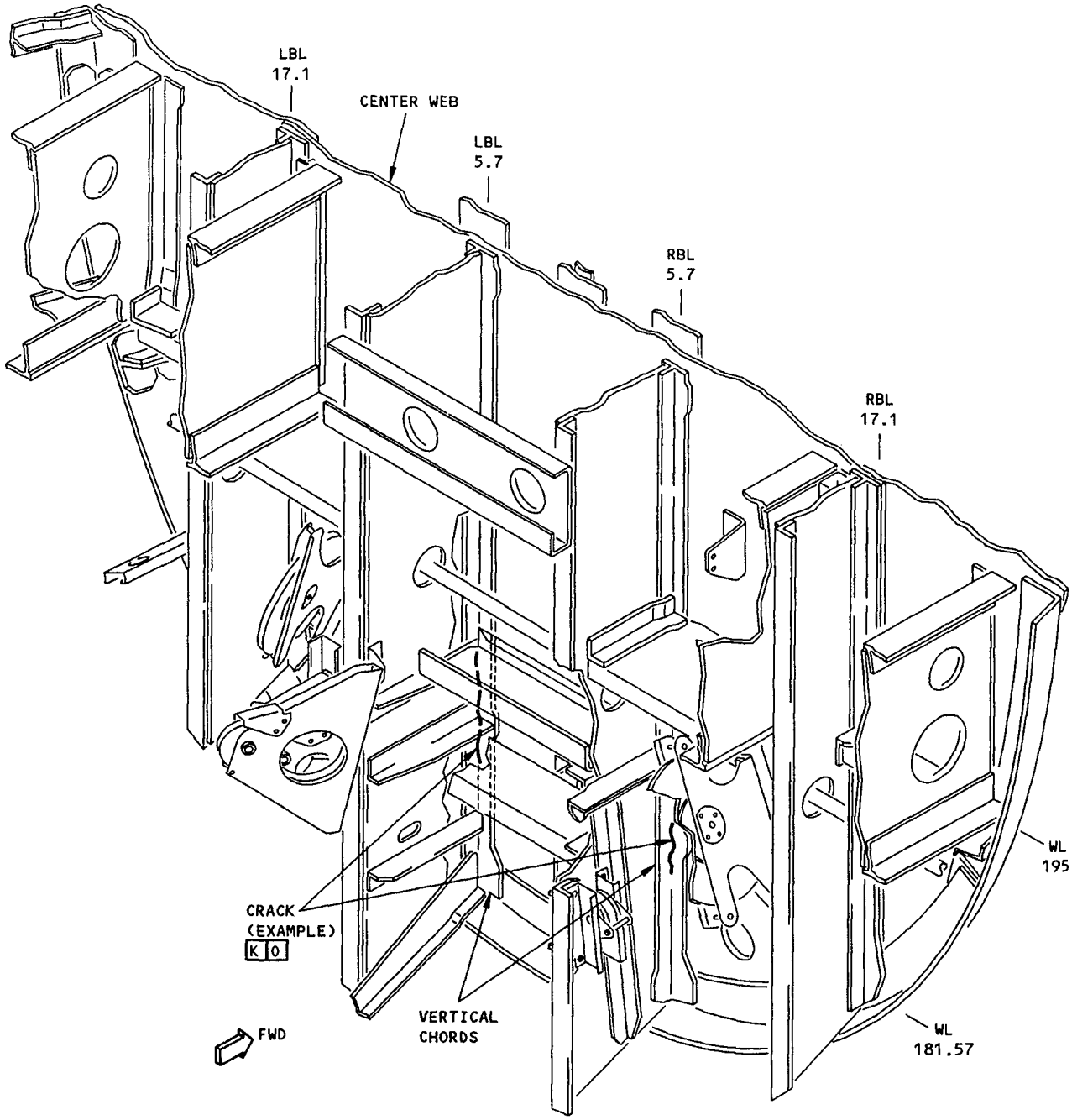

BS 178 BULKHEAD BELOW WL 207
(WITH PULLEY BRACKETS INSTALLED)

REAR VIEW

DETAIL II

BS 178 Bulkhead - Repair of the LBL 5.7 or RBL 5.7
Vertical Beam Forward Chord Below WL 190
Figure 8 (Sheet 7)

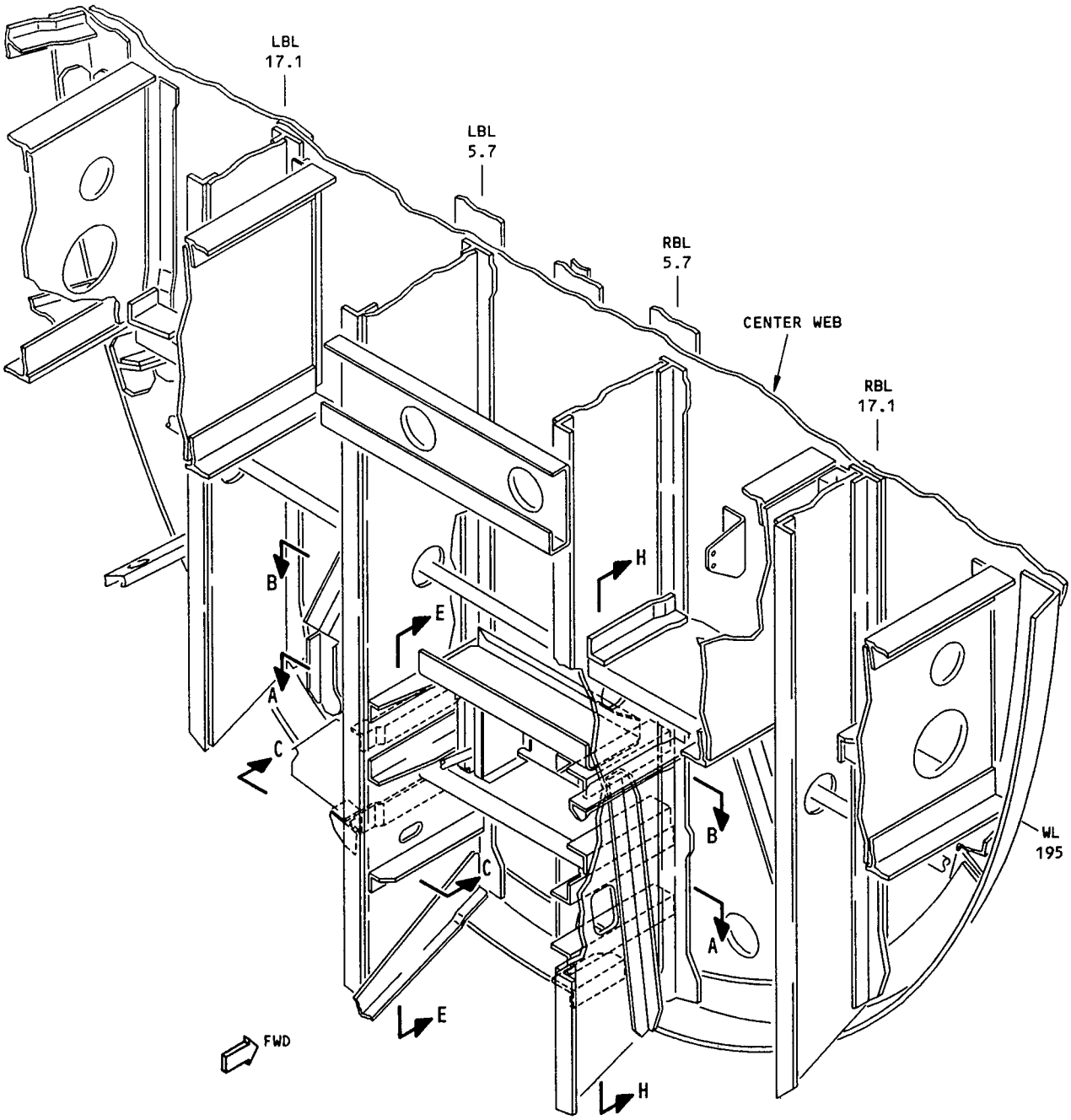

BS 178 BULKHEAD BELOW WL 207
(WITH PULLEY BRACKETS REMOVED)

REAR VIEW

DETAIL III

BS 178 Bulkhead - Repair of the LBL 5.7 or RBL 5.7
Vertical Beam Forward Chord Below WL 190
Figure 8 (Sheet 8)

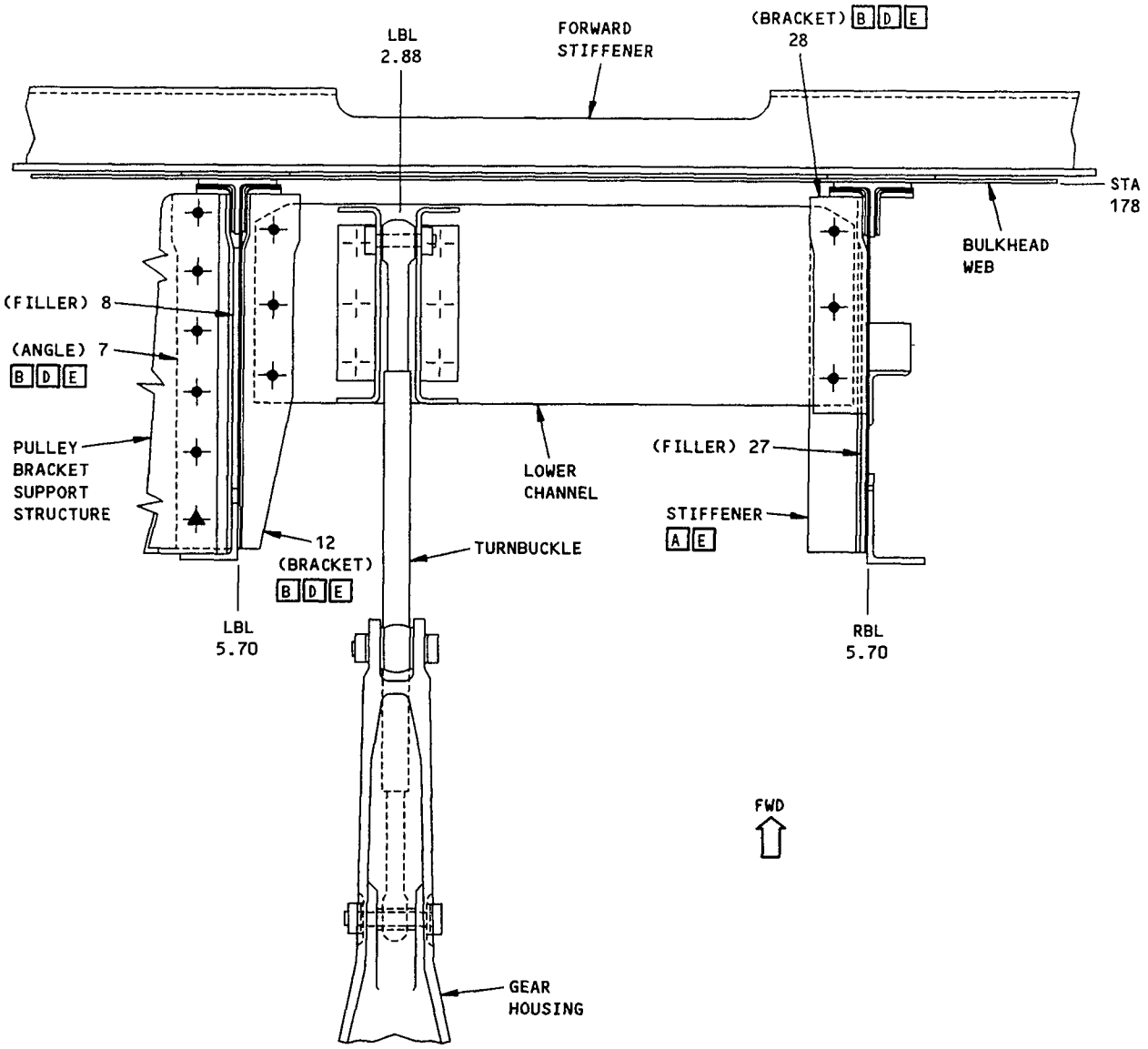

SECTION A-A

BS 178 Bulkhead - Repair of the LBL 5.7 or RBL 5.7
Vertical Beam Forward Chord Below WL 190
Figure 8 (Sheet 9)

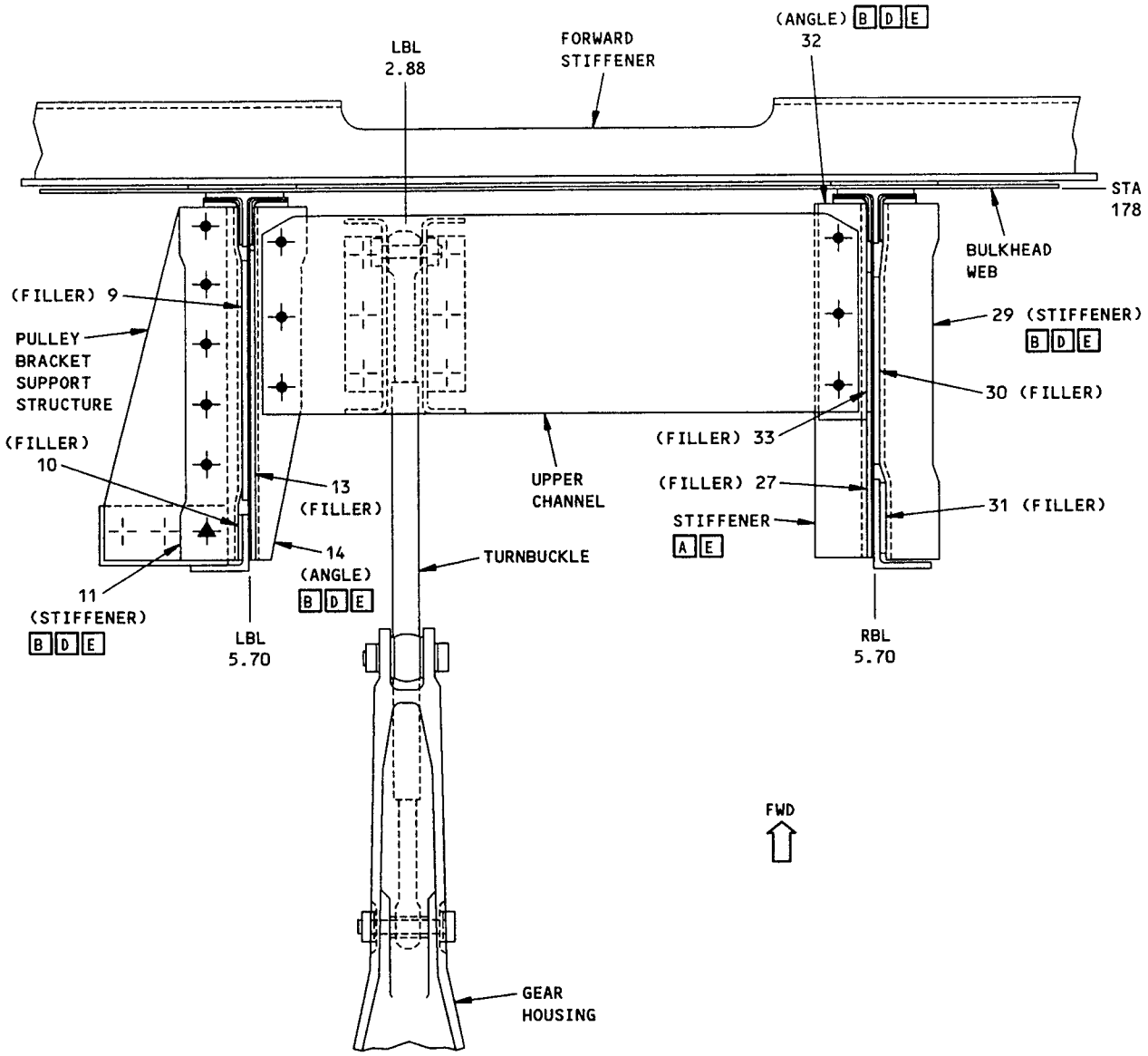

SECTION B-B

BS 178 Bulkhead - Repair of the LBL 5.7 or RBL 5.7
Vertical Beam Forward Chord Below WL 190
Figure 8 (Sheet 10)

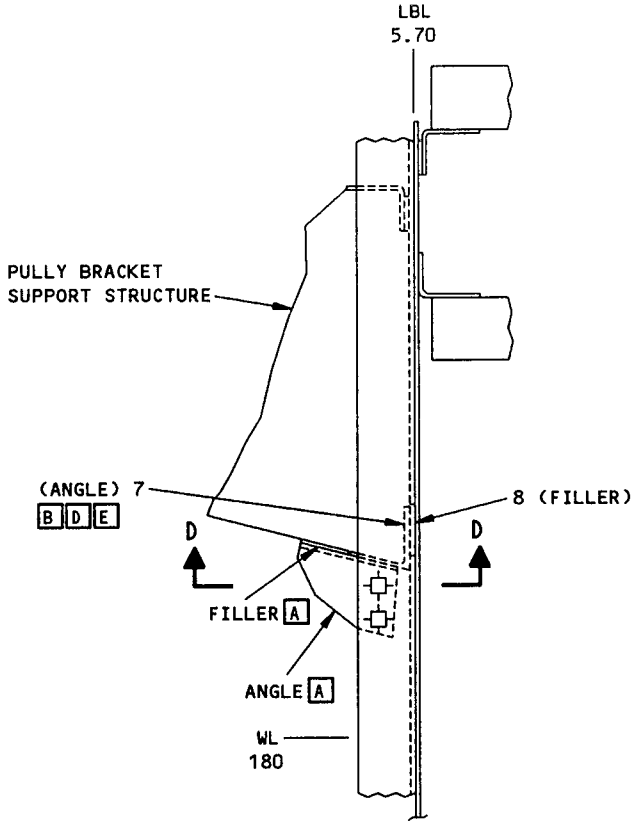

VIEW C-C

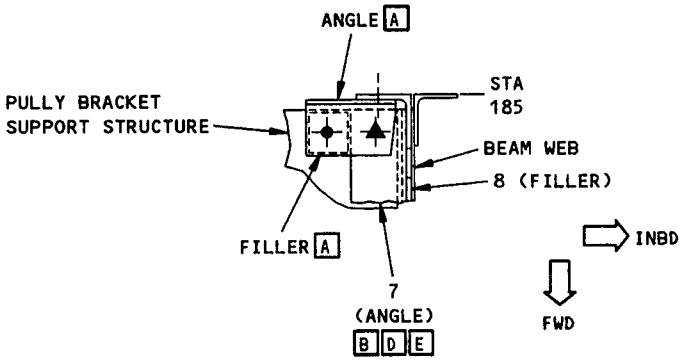

SECTION D-D

BS 178 Bulkhead - Repair of the LBL 5.7 or RBL 5.7
Vertical Beam Forward Chord Below WL 190
Figure 8 (Sheet 11)

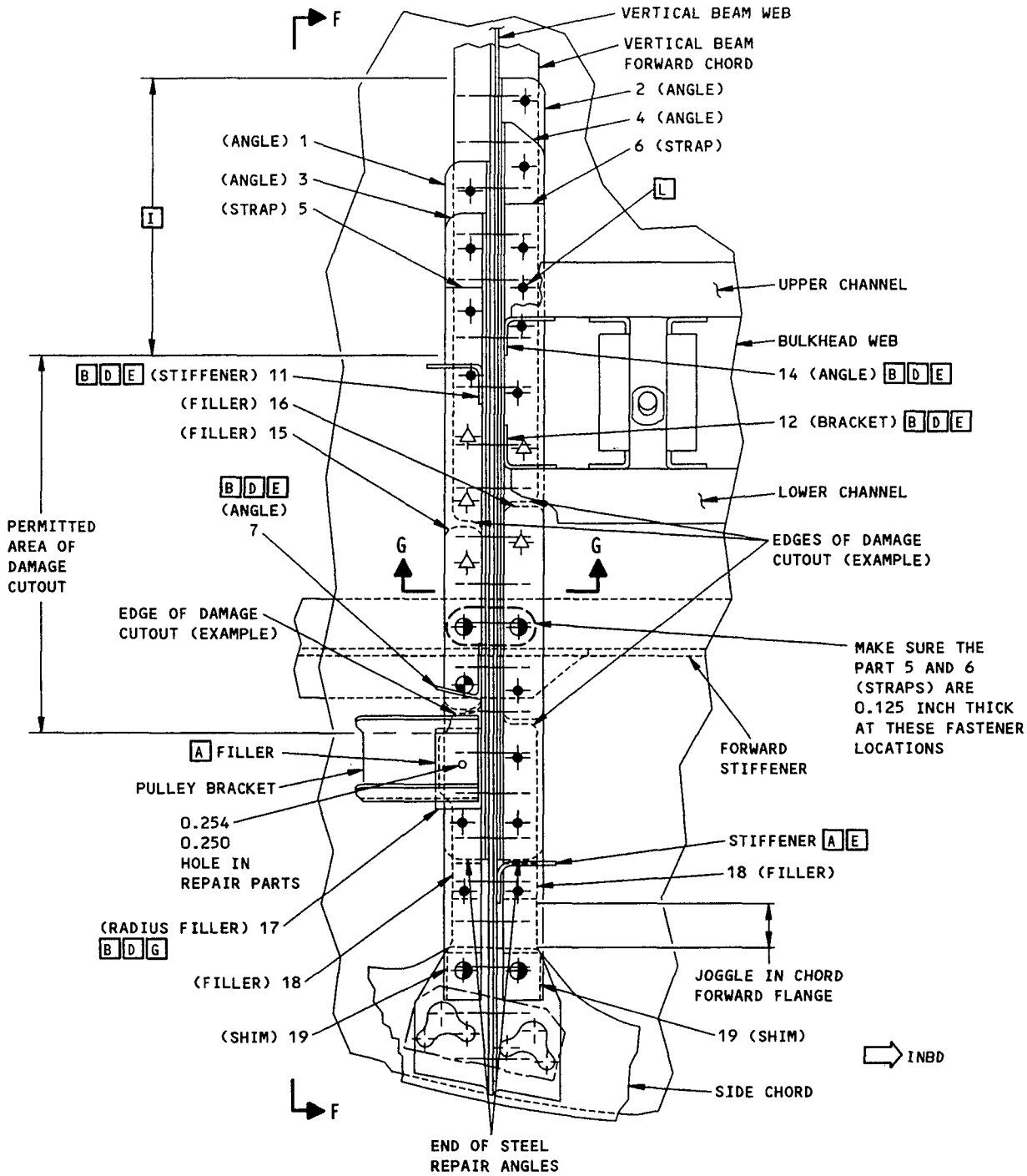

LBL 5.7 VERTICAL BEAM REPAIR INSTALLATION
REAR VIEW
SECTION E-E

BS 178 Bulkhead - Repair of the LBL 5.7 or RBL 5.7
Vertical Beam Forward Chord Below WL 190
Figure 8 (Sheet 12)

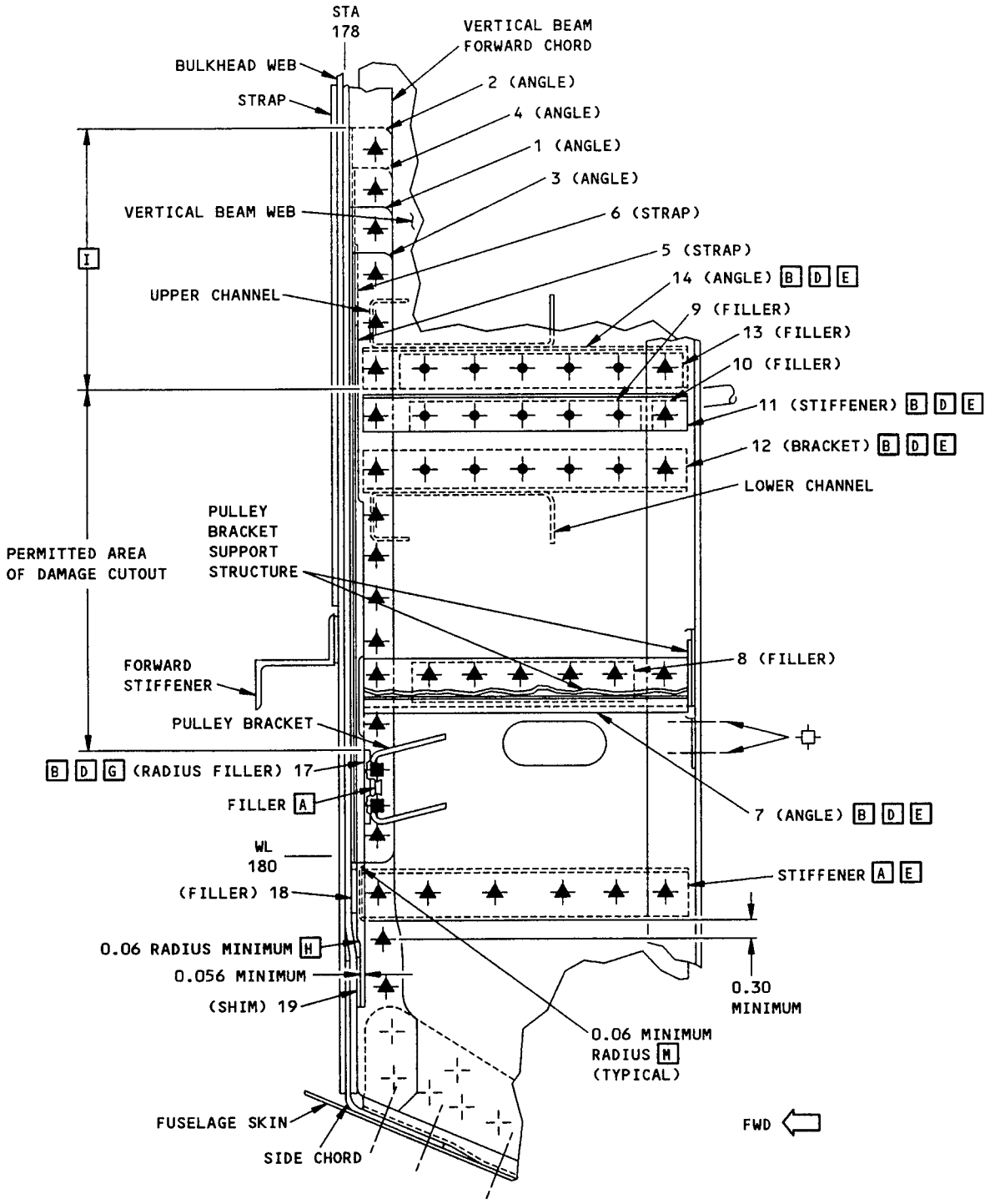

LBL 5.7 VERTICAL BEAM REPAIR INSTALLATION
LEFT SIDE VIEW
SECTION F-F

BS 178 Bulkhead - Repair of the LBL 5.7 or RBL 5.7
Vertical Beam Forward Chord Below WL 190
Figure 8 (Sheet 13)

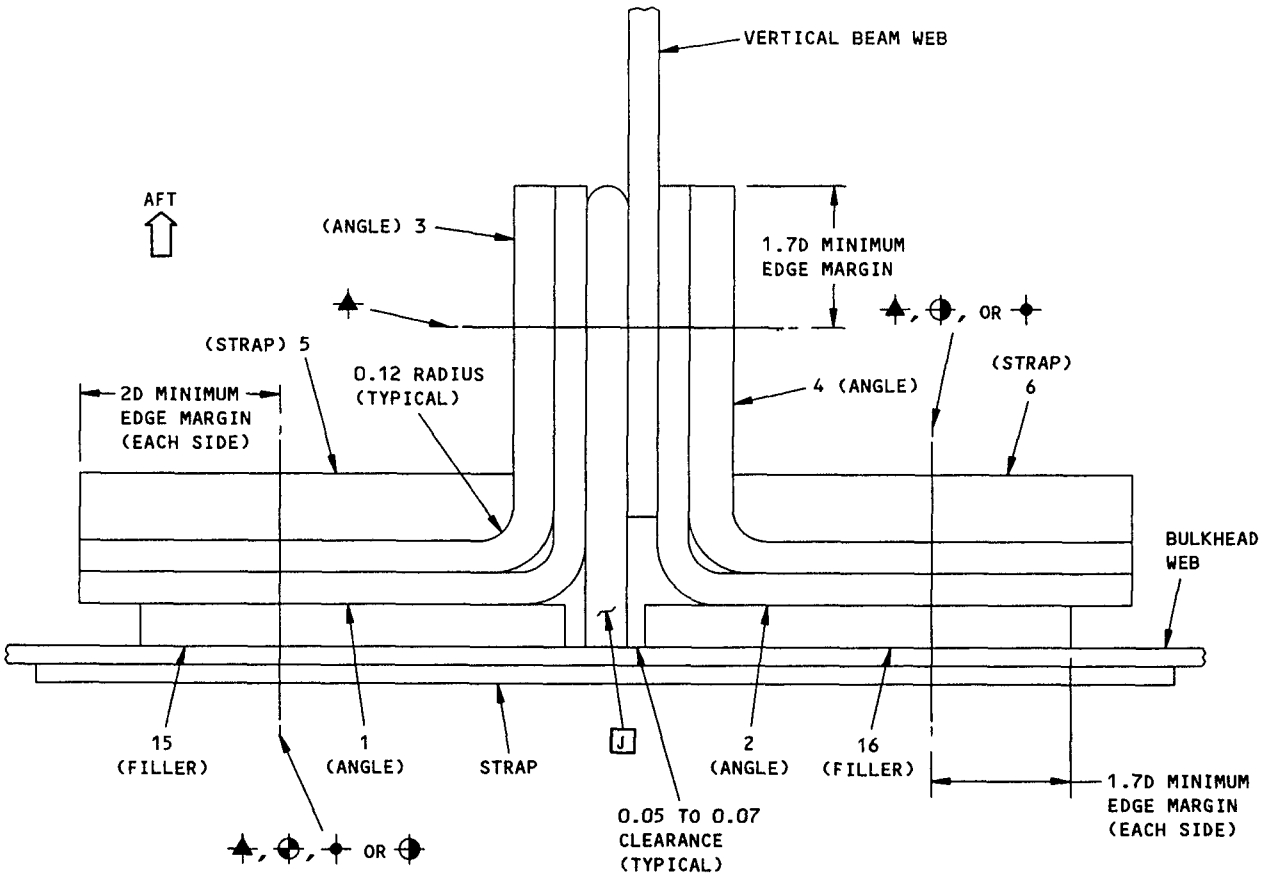

SECTION AT DAMAGE CUTOUT FOR LBL 5.7 BEAM
(TYPICAL FOR LBL 5.7 BEAM AND RBL 5.7 BEAM)

SECTION G-G

BS 178 Bulkhead - Repair of the LBL 5.7 or RBL 5.7
Vertical Beam Forward Chord Below WL 190
Figure 8 (Sheet 14)

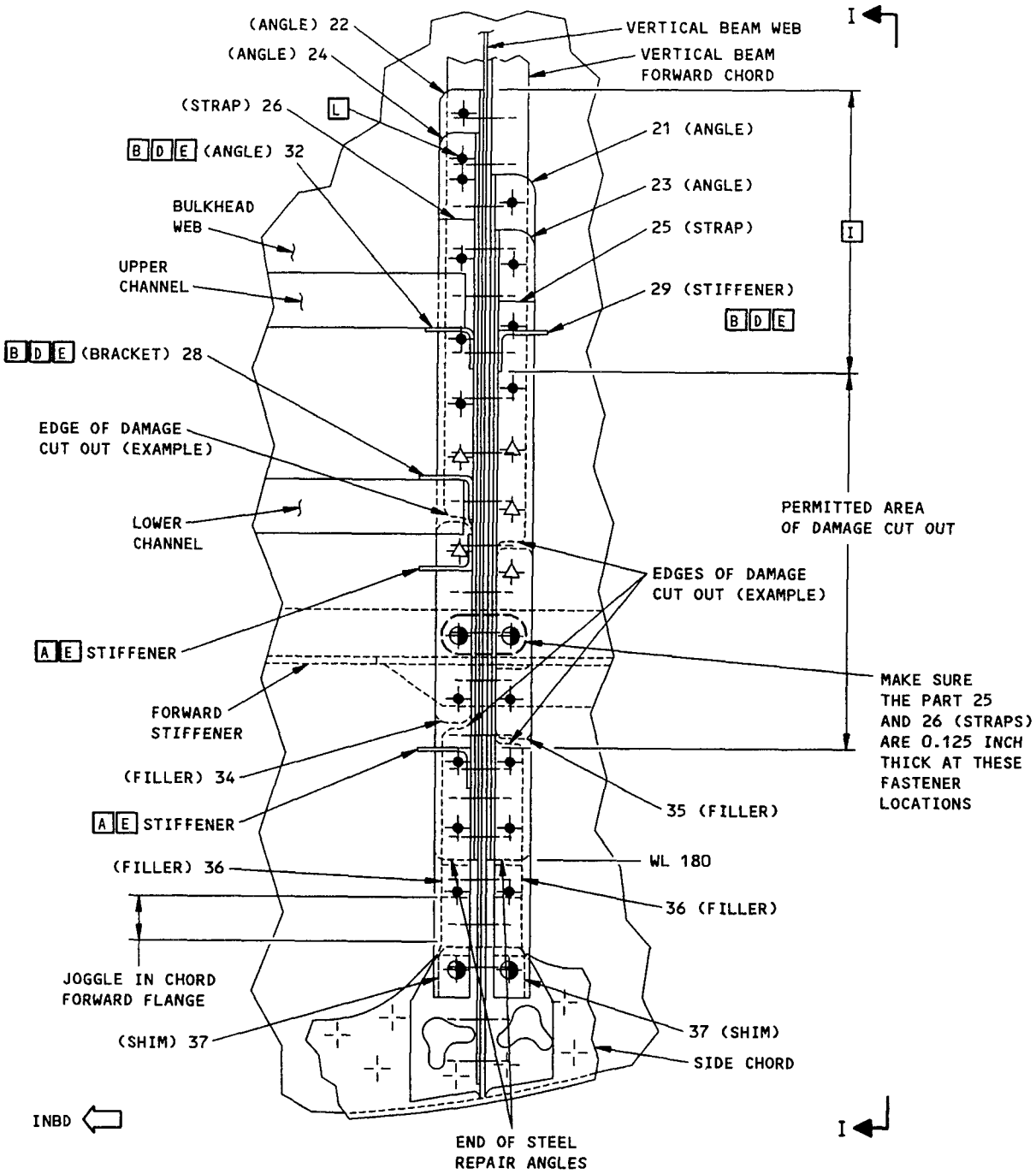

RBL 5.7 VERTICAL BEAM REPAIR INSTALLATION
REAR VIEW
SECTION H-H

BS 178 Bulkhead - Repair of the LBL 5.7 or RBL 5.7
Vertical Beam Forward Chord Below WL 190
Figure 8 (Sheet 15)

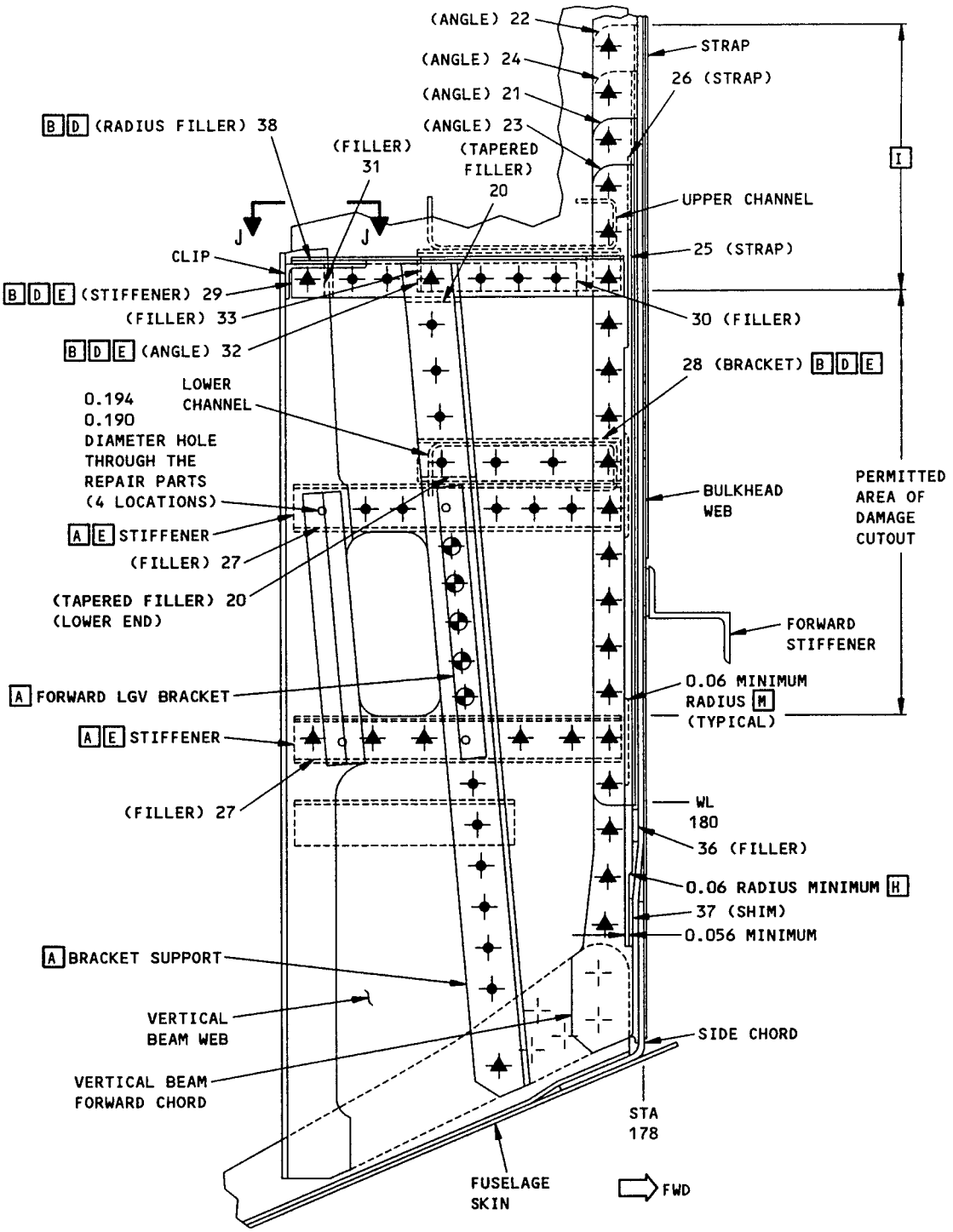

RBL 5.7 VERTICAL BEAM REPAIR INSTALLATION
RIGHT SIDE VIEW
SECTION I-I

BS 178 Bulkhead - Repair of the LBL 5.7 or RBL 5.7
Vertical Beam Forward Chord Below WL 190
Figure 8 (Sheet 16)

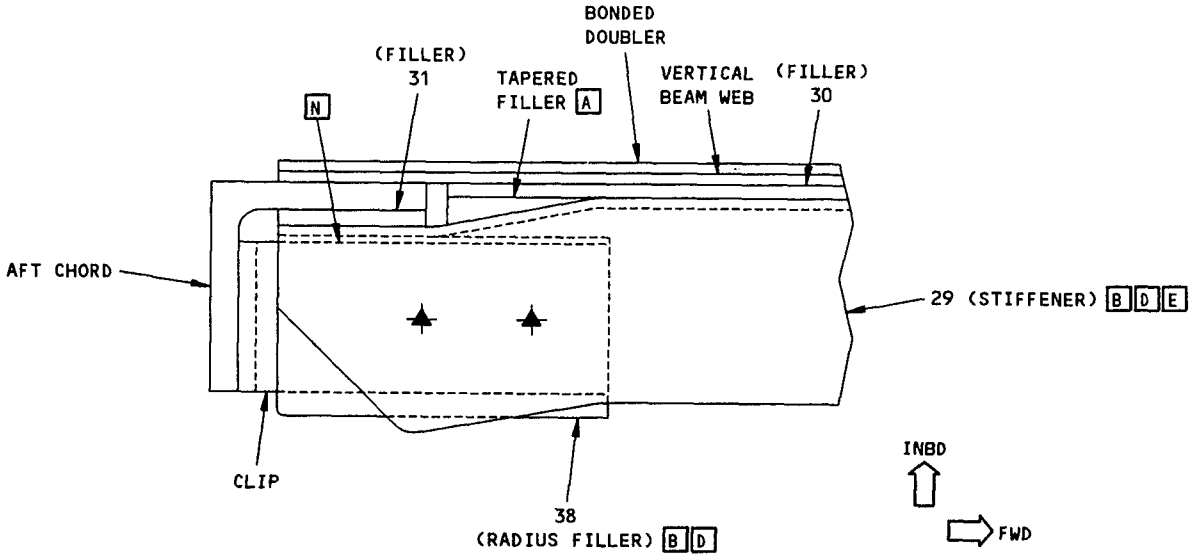

SECTION J-J

BS 178 Bulkhead - Repair of the LBL 5.7 or RBL 5.7
Vertical Beam Forward Chord Below WL 190
Figure 8 (Sheet 17)

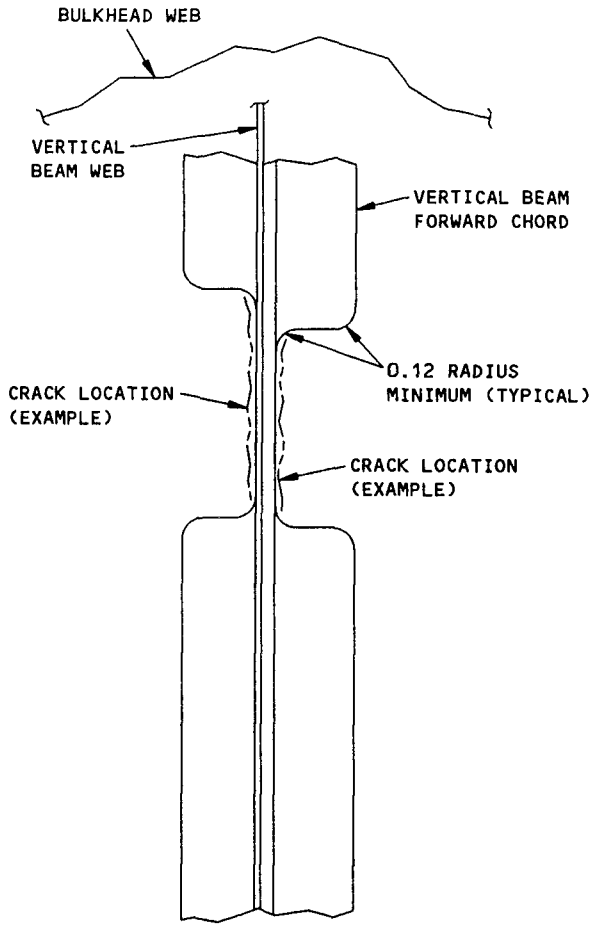

TYPICAL DAMAGE CUTOUT ON FORWARD FLANGE OF FORWARD CHORD

BL 5.7 VERTICAL BEAM

REAR VIEW

DETAIL IV

BS 178 Bulkhead - Repair of the LBL 5.7 or RBL 5.7
Vertical Beam Forward Chord Below WL 190
Figure 8 (Sheet 18)

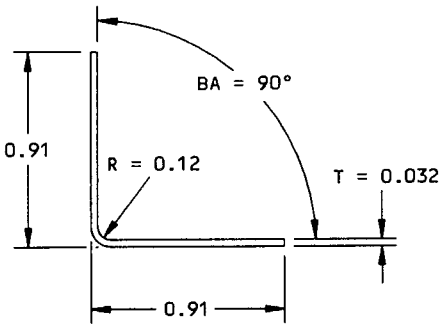

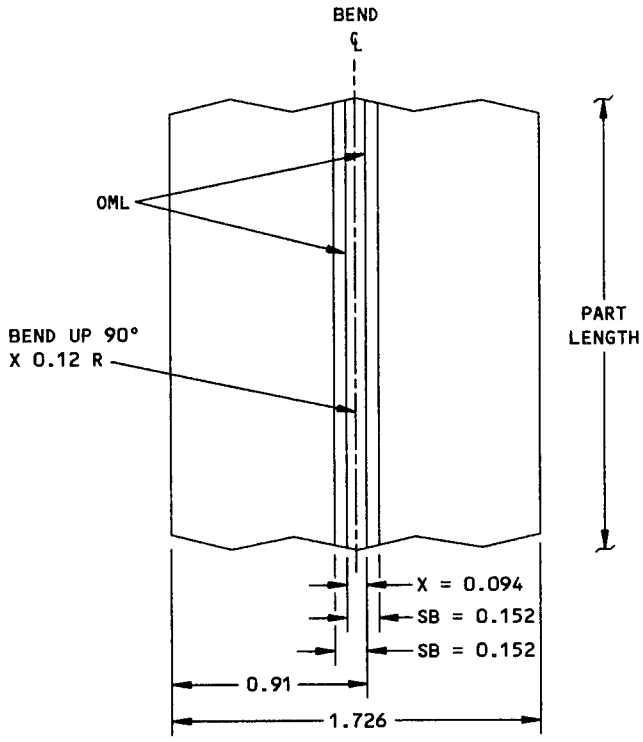

NOTE: REMOVE MATERIAL FROM THE FLANGE END IF NECESSARY TO GET A CLEARANCE BETWEEN THE FLANGE END AND THE VERTICAL BEAM STIFFENERS.

T = THE THICKNESS OF THE SHEET METAL.

R = THE INSIDE RADIUS OF THE BENT SHEET.

BA = THE ANGLE OF BEND IN DEGREES.

SB = SET BACK.

X = THE DISTANCE BETWEEN THE OUTSIDE MOLD LINES (OML) ON THE FLAT PATTERN.

FLAT PATTERN DATA FOR REPAIR PARTS 1, 2, 21, AND 22
DETAIL V

BS 178 Bulkhead - Repair of the LBL 5.7 or RBL 5.7
Vertical Beam Forward Chord Below WL 190
Figure 8 (Sheet 19)

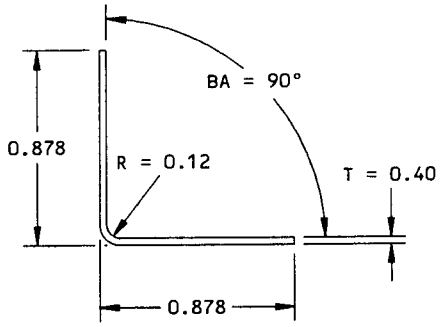

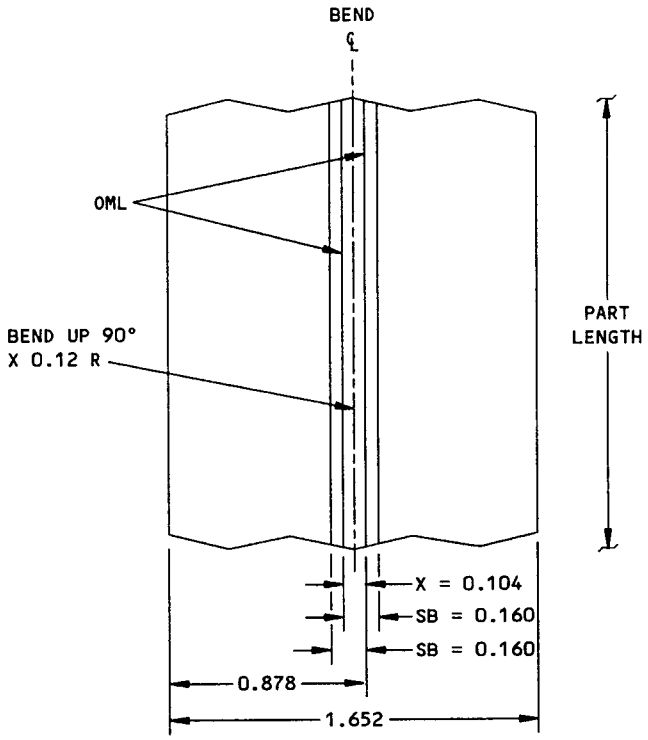

NOTE: REMOVE MATERIAL FROM THE FLANGE END IF NECESSARY TO GET A CLEARANCE BETWEEN THE FLANGE END AND THE VERTICAL BEAM STIFFENERS.

T = THE THICKNESS OF THE SHEET METAL.

R = THE INSIDE RADIUS OF THE BENT SHEET.

BA = THE ANGLE OF BEND IN DEGREES.

SB = SET BACK.

X = THE DISTANCE BETWEEN THE OUTSIDE MOLD LINES (OML) ON THE FLAT PATTERN.

FLAT PATTERN DATA FOR REPAIR PARTS 3, 4, 23, AND 24
DETAIL VI

BS 178 Bulkhead - Repair of the LBL 5.7 or RBL 5.7
Vertical Beam Forward Chord Below WL 190
Figure 8 (Sheet 20)

APPLICABILITY
THIS REPAIR IS APPLICABLE FOR WEB CRACKS UP TO 4.0 INCHES MAXIMUM.
THIS REPAIR CAN ONLY BE USED AT THE FOUR LOCATIONS SHOWN IN DETAIL I.

REPAIR INSTRUCTIONS

1. Open the nose radome and examine the bulkhead web for damage. Refer to SB 737-53A1173 for inspection procedures and the removal and installation of structures that are attached.
2. See Detail I to find the repair location for the damage found. If the damage is located from:
   A. LBL 5.7, WL 207 to WL 220, do the repair as shown in Detail II, VI, or VII. [A]
   B. RBL 5.7, WL 207 to WL 220, do the repair as shown in Detail III, VI, or VII. [A]
   C. LBL 5.7, WL 195 to WL 207, do the repair as shown in Detail IV, VI, or VII.
   D. RBL 5.7, WL 195 to WL 207, do the repair as shown in Detail V, VI or VII.
3. Remove the fasteners from the damaged web, stiffeners, chord or other structure as necessary. Remove channels and angle stiffeners, latches, or clips as necessary.
4. Cut out the straps as necessary.
5. Cut and remove the damaged part of the web. See Procedure I. As an alternate procedure for a crack that is 1.00 inch or less in length, stop drill the end of the crack. See Procedure II.

   NOTE: If there is more than one crack in a given area, do not stop drill, but cut out the cracks.

   To protect the structure behind the web, put a thin steel sheet between the web and the structure behind it.
6. Make the repair parts. Refer to Table I. Make sure that there are a minimum of two rows of fasteners on each side of the cutout or the stop drill hole, through the repair doubler in the vertical and horizontal directions.
7. Temporarily assemble the repair parts and drill the fastener holes.
8. Keep the pull-up limit to a maximum of 0.010 inch. If shims are necessary, refer to SRM 51-20-1.
9. Disassemble the repair parts.
10. Remove the nicks, scratches, gouges, burrs, and sharp edges from the repair parts and the initial parts.
11. Apply a chemical conversion coating to the repair parts and to the bare surfaces of the initial parts. Refer to SRM 51-10-2.
12. Apply one layer of BMS 10-11, Type I primer to the repair parts and to the bare surfaces of the initial parts. Refer to SOPM 20-41-02.
13. Install the repair parts. Apply BMS 5-95 sealant to the mating surfaces. Apply fillet seals and fill all gaps with BMS 5-95 sealant. Refer to SRM 51-20-4.
14. Install the fasteners. Fasteners that are not made of aluminum must be installed wet with BMS 5-95 sealant.
15. Apply one layer of BMS 10-11, Type II enamel to the repair area. Refer to SOPM 20-41-02.
16. Apply corrosion inhibiting compound to the repair area. Refer to SRM 51-10-2.

PROCEDURE I

1. Cut out the minimum amount of material necessary to remove the damage.

   NOTE: Make a radius that is a minimum of 0.38 inch at each corner of the cut out. Make sure to keep an edge margin to a minimum of 2.0 times the diameter of the fastener.
2. Do an HFEC inspection along the cutout to make sure there are no cracks. Refer to NDT Part 6, SRM 51-00-00.
3. If there are no cracks, make the cutouts larger by 0.10 inch. The cutout must have a minimum radius of 0.38 inch. Make sure that fasteners in the cutout area have a minimum edge margin of 1.7 times the diameter of the fastener.
4. Go back to step 5 in the Repair instructions.

BS 178 Bulkhead - Web Repair at LBL 5.7 or RBL 5.7 Between WL 195 and WL 220
Figure 9 (Sheet 1)

BOEING PROPRIETARY - Copyright © - Unpublished Work - See title page for details.

PROCEDURE II

1. If a crack does not stop in a fastener hole, stop drill the crack:
   A. Stop drill the ends of the crack to a diameter of 0.25 inch. Refer to SRM 51-10-1.
   B. Do a High Frequency Eddy Current (HFEC) inspection of the hole. Make sure there is no crack on the side of the hole opposite the crack.
   C. If there is a crack indication, make the hole larger by 1/64 inch and do the HFEC inspection again. When there is no crack, make the hole larger by 1/16 inch.
   D. Go back to step 5 in the Repair Instructions.
2. If a crack ends in a fastener hole, oversize the fastener hole:
   A. Do a High Frequency Eddy Current (HFEC) inspection of the hole. Make sure there is no crack on the side of the hole opposite the crack.
   B. If there is a crack on the opposite side of the hole, cut out the crack as given in Procedure I.
   C. Go back to step 5 in the Repair Instructions.

NOTES

- THIS REPAIR IS APPROVED AS AN ALTERNATE METHOD OF COMPLIANCE TO AD 2000-05-29, PARAGRAPH "b". THIS ALTERNATE METHOD OF COMPLIANCE APPLIES ONLY TO THE REPAIRED AREA. INSPECTIONS IN THE NON-REPAIRED AREAS MUST CONTINUED AS SPECIFIED IN AD 2000-05-29.
- THIS REPAIR HAS FAA APPROVAL IF YOU DO THE INSPECTIONS AT THE SPECIFIED THRESHOLD AND INTERVALS AND REPLACE THE REPAIR AT THE SPECIFIED TIME LIMIT GIVEN.
- A DAMAGE TOLERANCE ASSESSMENT IS NOT NECESSARY FOR FLAT PRESSURE BULKHEAD WEB REPAIRS IF EXTERNAL GENERAL VISUAL (SURVEILLANCE) INSPECTION INTERVALS ARE NOT MORE THAN 8,000 FLIGHT CYCLES. THUS, THESE WEB REPAIRS ARE NOT SUBJECT TO THE REPAIR ASSESSMENT PROGRAM SPECIFIED IN SRM 51-00-6.
- THESE REPAIRS WILL NOT HAVE AN EFFECT ON THE STRUCTURALLY SIGNIFICANT ITEMS GIVEN IN SRM 51-00-4, FIGURE 3. THUS, NO CHANGE TO THE SUPPLEMENTAL STRUCTURAL INSPECTION DOCUMENT (SSID) INSPECTION PROGRAM IS NECESSARY.
- DETAILS II THRU V SHOW REPAIRS FOR MAXIMUM WEB TRIMOUT PERMITTED. IT IS PERMITTED TO DECREASE THE SIZE OF THE STRUCTURAL FILLERS AND THE SIZE OF THE DOUBLER FOR CRACKS LESS THAN THE MAXIMUM PERMITTED. IT IS PERMITTED TO DECREASE THE SIZE OF THE DOUBLER AND THE SIZE OF THE STRUCTURAL FILLERS WHEN YOU CUT THE STRAP AT ONE LOCATION. SEE DETAILS VI AND VII. [I] [J]
- D = FASTENER DIAMETER.
- FOR THE REPAIR FASTENER LOCATION USE SAME FASTENER SPACING USED IN ADJACENT STRUCTURE. FASTENER SPACING MUST BE 4D-6D.
- USE SHIMS, FILLERS OR TAPERED FILLERS SO THAT THE GAPS BETWEEN THE PARTS ARE NOT MORE THAN 0.010 INCH BEFORE FASTENER INSTALLATION. TAPER SHIMS SHOULD BE 100:1 RATIO MINIMUM.
- KEEP A MINIMUM EDGE MARGIN OF 2D.
- WHEN YOU USE THIS REPAIR, REFER TO:
  - SOPM 20-41-02 FOR APPLICATION OF CHEMICAL AND SOLVENT RESISTANT FINISHES
  - NDT PART 6, SRM 51-00-00 FOR EDDY CURRENT INSPECTION OF THE FUSELAGE SKIN
  - NDT PART 6, SRM 53-30-00 FOR EDDY CURRENT INSPECTION OF FASTENER HOLES IN THE FUSELAGE SKIN
  - SRM 51-10-1 FOR INSPECTION AND REMOVAL OF DAMAGE
  - SRM 51-10-2 FOR PROTECTIVE TREATMENT OF METAL
  - SRM 51-20-4 FOR REPAIR SEALING
  - SRM 51-20-1 FOR SHEET METAL AND FLAT PATTERN DATA, RULES OF SHIMMING
  - SRM 51-30 FOR FASTENER CODES, INSTALLATION AND REMOVAL, HOLE SIZES AND EDGE MARGINS.

BS 178 Bulkhead - Web Repair at LBL 5.7 or RBL 5.7 Between WL 195 and WL 220
Figure 9 (Sheet 2)

BOEING PROPRIETARY - Copyright © - Unpublished Work - See title page for details.

NOTES (CONT)

[A] YOU CAN INSTALL BLIND BOLTS AND BLIND RIVETS IN DETAILS II, III, VI AND VII. EXAMINE THE BLIND FASTENERS AT 3,000 FLIGHT CYCLES AFTER INSTALLATION, AND EACH 2,500 FLIGHT CYCLES AFTER THAT. IT IS RECOMMENDED THAT THE BLIND FASTENER REPAIR BE REPLACED WITH A SOLID FASTENER REPAIR BY THE SUBSEQUENT OVERHAUL. THE BLIND FASTENER REPAIR MUST BE REPLACED WITH A SOLID FASTENER REPAIR WITHIN 10,000 FLIGHT CYCLES AFTER THE INITIAL INSTALLATION. FOR THE REPLACEMENT OF THE BLIND FASTENERS, SEE TABLE II.

WHEN YOU INSTALL THE BLIND FASTENER REPAIR, MAKE SURE:

- THE BLIND FASTENERS ARE CORRECTLY INSTALLED ON THE INTERNAL STRUCTURE AS GIVEN IN SRM 51-30.
- SUFFICIENT FASTENER SPACING AND EDGE MARGINS ARE KEPT.

[B] IF IT IS NECESSARY TO REMOVE PARTS AFT OF THE WEB AREA, REFER TO SB 737-53A1173 AND SB 737-53-1208.

[C] IF THERE IS DAMAGE AT LBL 5.7 ABOVE AND BELOW WL 207 OR AT RBL 5.7 ABOVE AND BELOW WL 207, REFER TO FIGURE 1 OR FIGURE 4.

[D] CUT AND REMOVE THE 0.032 INCH STRAP TO PERMIT THE CUTOUT OF THE CRACK. MAKE SURE THAT A MINIMUM OF FOUR FASTENERS ARE ABOVE AND BELOW THE CUT.

[E] INSTALL A BACR15BB8AD() RIVET IN THE TOOLING HOLE THRU THE WEB AND THE STRUCTURAL FILLER.

[F] MAKE SURE THAT THE END OF THE CUT OUT IS AT LEAST ONE FASTENER ROW AWAY FROM THE CONNECTOR CUTOUT.

[G] SINGLE CUT IN STRAP. PEEL THE STRAP FOR WEB INSPECTION AND WEB DAMAGE TRIMOUT. USE CAUTION TO AVOID PERMANENT DEFORMATION OF THE STRAP.

[H] WHEN YOU CUT THE STRAP AT ONLY ONE LOCATION IT IS PERMITTED TO REDUCE THE SIZE OF THE DOUBLER AND THE SIZE OF THE STRUCTURAL FILLER AS SHOWN. KEEP TWO FASTENER ROWS IN THE DOUBLER, PAST THE WEB DAMAGE CUTOUT OR CRACK STOP DRILLS. KEEP A MINIMUM OF FOUR FASTENERS IN THE DOUBLER ON EACH SIDE OF THE STRAP CUT.

[I] IF THE CRACK LENGTH IS LESS THAN MAXIMUM PERMITTED, IT IS PERMITTED TO REDUCE THE SIZE OF THE DOUBLER AND THE SIZE OF THE STRUCTURAL FILLER AS SHOWN. KEEP TWO FASTENER ROWS IN THE DOUBLER, PAST THE WEB DAMAGE CUTOUT OR CRACK STOP DRILLS. KEEP A MINIMUM OF FOUR FASTENERS IN THE DOUBLER ON EACH SIDE OF THE STRAP CUT.

[J] WHEN THERE ARE WEB CRACKS ONLY ON ONE SIDE OF BL 5.7 STRAPS (RBL 5.7 OR LBL 5.7) IT IS PERMITTED TO REDUCE THE SIZE OF THE DOUBLER ON THE SIDE OF THE STRAP WHERE THE WEB IS NOT CRACKED. MAKE SURE AND KEEP A MINIMUM OF TWO ROWS OF FASTENERS IN THE DOUBLER FROM THE EDGE OF THE STRAP, ON THE SIDE WHERE THE WEB IS NOT CRACKED.

FASTENER SYMBOLS

REFERENCE FASTENER LOCATION

INITIAL FASTENER LOCATION. INSTALL A BACB30MY6K() HEX DRIVE BOLT WITH A BACC30R COLLAR. AS AN ALTERNATIVE, INSTALL A MS21141U06 OR A MS90354U06 BLIND BOLT. [A]

REPAIR FASTENER LOCATION. INSTALL A BACB30MY6K() HEX DRIVE BOLT WITH A BACC30M COLLAR. AS AN ALTERNATIVE, INSTALL A MS21141U06 OR A MS90354U06 BLIND BOLT. [A]

REPAIR FASTENER LOCATION. INSTALL A BACB30MY6K() HEX DRIVE BOLT WITH A BACC30M COLLAR. AS AN ALTERNATIVE, INSTALL A BACR15FR6 BLIND RIVET. [A]

INITIAL FASTENER LOCATION. INSTALL A BACB30MY6K() HEX DRIVE BOLT WITH BACC30R COLLAR.

REPAIR FASTENER LOCATION. INSTALL A BACB30MY6K() HEX DRIVE BOLT WITH A BACC30M COLLAR.

INITIAL FASTENER LOCATION. FOR REPAIRS INSTALLED ABOVE WL 207 INSTALL A BACB30MY6K() HEX DRIVE BOLT WITH A BACC30M COLLAR. AS AN ALTERNATIVE INSTALL A MS21141U06 OR A MS90354U06 BLIND BOLT. FOR REPAIRS INSTALLED BELOW WL 207 INSTALL A BACB30MY6K() HEX DRIVE BOLT WITH A BACC30M COLLAR. [A]

REPAIR FASTENER LOCATION. FOR REPAIRS INSTALLED ABOVE WL 207 INSTALL A BACB30MY6K() HEX DRIVE BOLT WITH A BACC30M COLLAR. AS AN ALTERNATIVE INSTALL A BACR15FR6 BLIND RIVET. FOR REPAIRS INSTALLED BELOW WL 207 INSTALL A BACB30MY6K() HEX DRIVE BOLT WITH A BACC30M COLLAR. [A]

BS 178 Bulkhead - Web Repair at LBL 5.7 or RBL 5.7 Between WL 195 and WL 220
Figure 9 (Sheet 3)

BOEING PROPRIETARY - Copyright © - Unpublished Work - See title page for details.

FASTENER SYMBOLS (CONT)

INITIAL FASTENER LOCATION. FOR REPAIRS INSTALLED ABOVE WL 207 INSTALL A BACB30NX6K()Y HEX DRIVE BOLT WITH A BACC30AC COLLAR. AS AN ALTERNATIVE INSTALL A MS21141U06 OR A MS90354U06 BLIND BOLT. FOR REPAIRS INSTALLED BELOW WL 207 INSTALL A BACB30NX6K()Y HEX DRIVE BOLT WITH A BACC30AC COLLAR. [A]

REPAIR FASTENER LOCATION. FOR REPAIRS INSTALLED ABOVE WL 207 INSTALL A BACB30MY6K() HEX DRIVE BOLT WITH A BACC30M COLLAR. AS AN ALTERNATIVE INSTALL A MS21141U6 OR A MS90354U06 BLIND BOLT. FOR REPAIRS INSTALLED BELOW WL 207 INSTALL A BACB30MY6K() HEX DRIVE BOLT WITH A BACC30M COLLAR. [A]

REPAIR MATERIAL			
PART NO.	PART	QTY	MATERIAL
1	DOUBLER	1	0.050 INCH 2024-T3 CLAD
2	STRUCTURAL FILLER	2	0.032 INCH 2024-T3 CLAD
3	FILLER	1	0.032 INCH 2024-T3 CLAD

TABLE I

BLIND FASTENER	SOLID FASTENER
MS21141U06 OR MS90354U06 BLIND BOLT	BACB30NX6K()X HEX DRIVE BOLT WITH BACC30X COLLAR
BACR15FR6 BLIND RIVET	BACB30NX6K()Y HEX DRIVE BOLT WITH BACC30AC COLLAR

REPLACEMENT FASTENERS FOR THE BLIND FASTENERS
TABLE II

BS 178 Bulkhead - Web Repair at LBL 5.7 or RBL 5.7 Between WL 195 and WL 220
Figure 9 (Sheet 4)

BOEING PROPRIETARY - Copyright © - Unpublished Work - See title page for details.

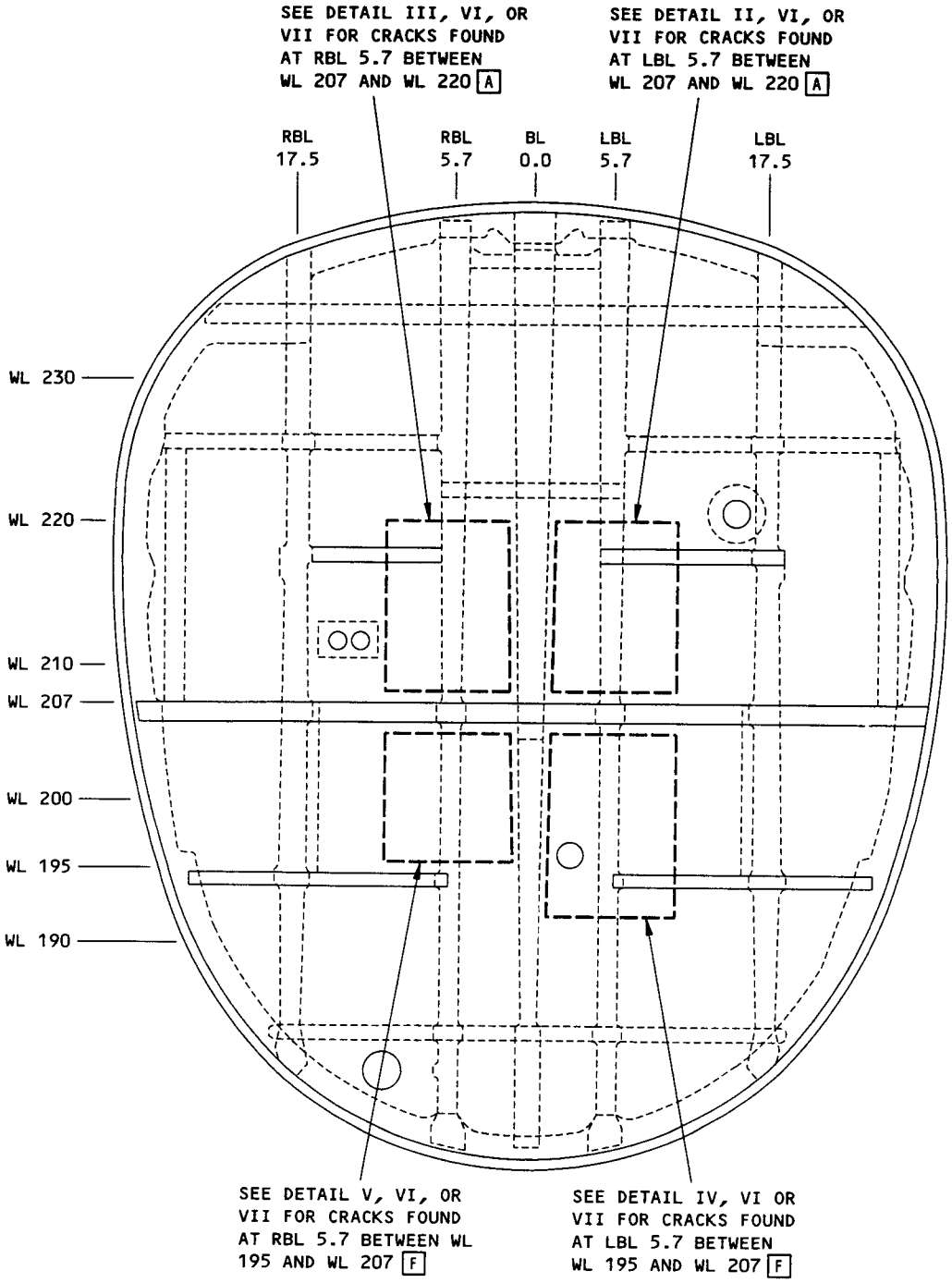

VIEW LOOKING AFT

BS 178 BULKHEAD - REPAIR LOCATIONS FOR CRACKS BETWEEN WL 195 AND WL 220 AT RBL 5.7 OR LBL 5.7
DETAIL I B

BS 178 Bulkhead - Web Repair at LBL 5.7 or RBL 5.7 Between WL 195 and WL 220
Figure 9 (Sheet 5)

BOEING PROPRIETARY - Copyright © - Unpublished Work - See title page for details.

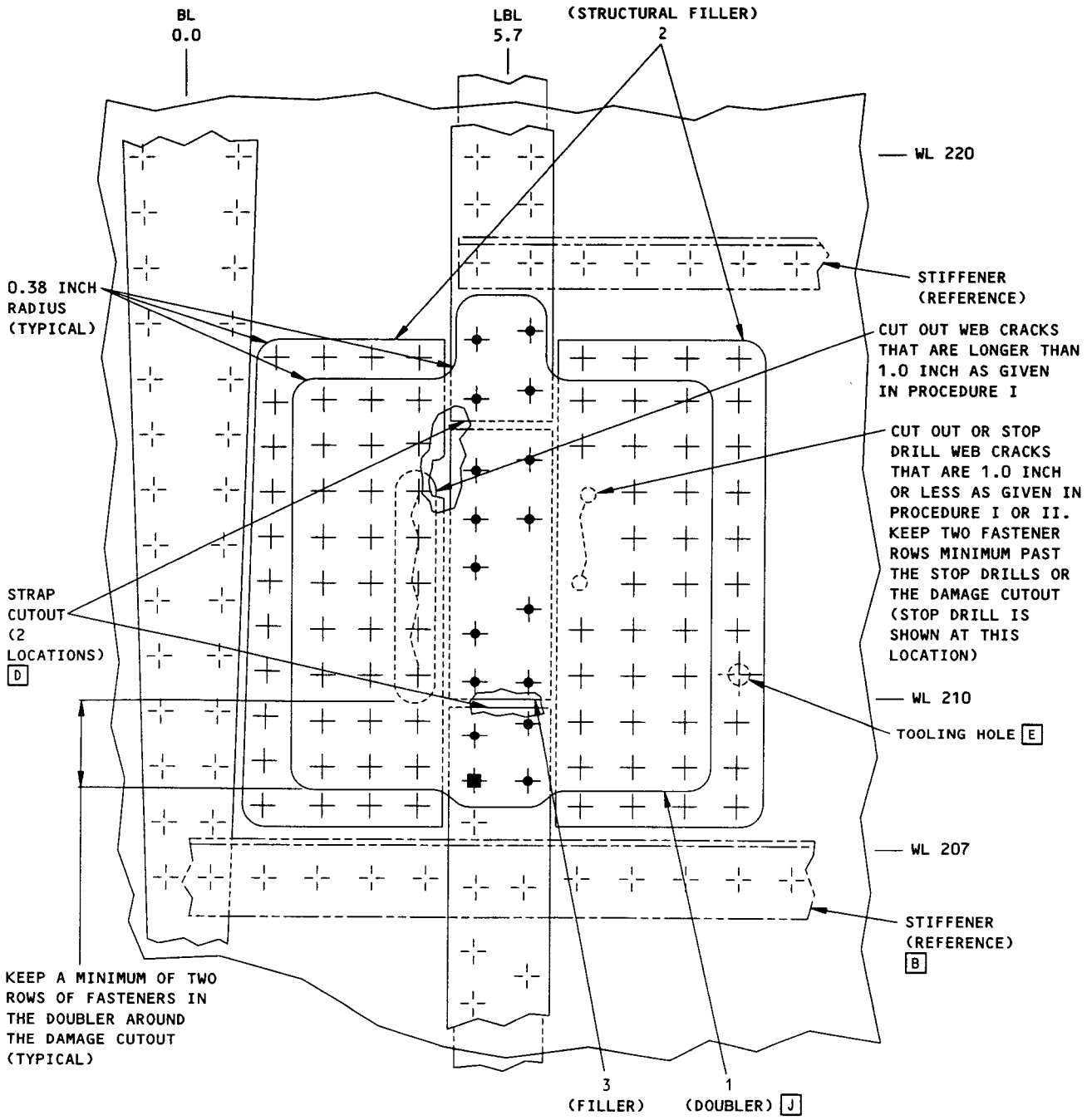

VIEW LOOKING AFT
INSTALLATION OF A PERMANENT OR TIME LIMITED REPAIR FOR CRACKS
BETWEEN WL 207 AND WL 218 AT LBL 5.7
(FOR STRAP CUT AT TWO LOCATIONS)
DETAIL II A C

BS 178 Bulkhead - Web Repair at LBL 5.7 or RBL 5.7 Between WL 195 and WL 220
Figure 9 (Sheet 6)

BOEING PROPRIETARY - Copyright © - Unpublished Work - See title page for details.

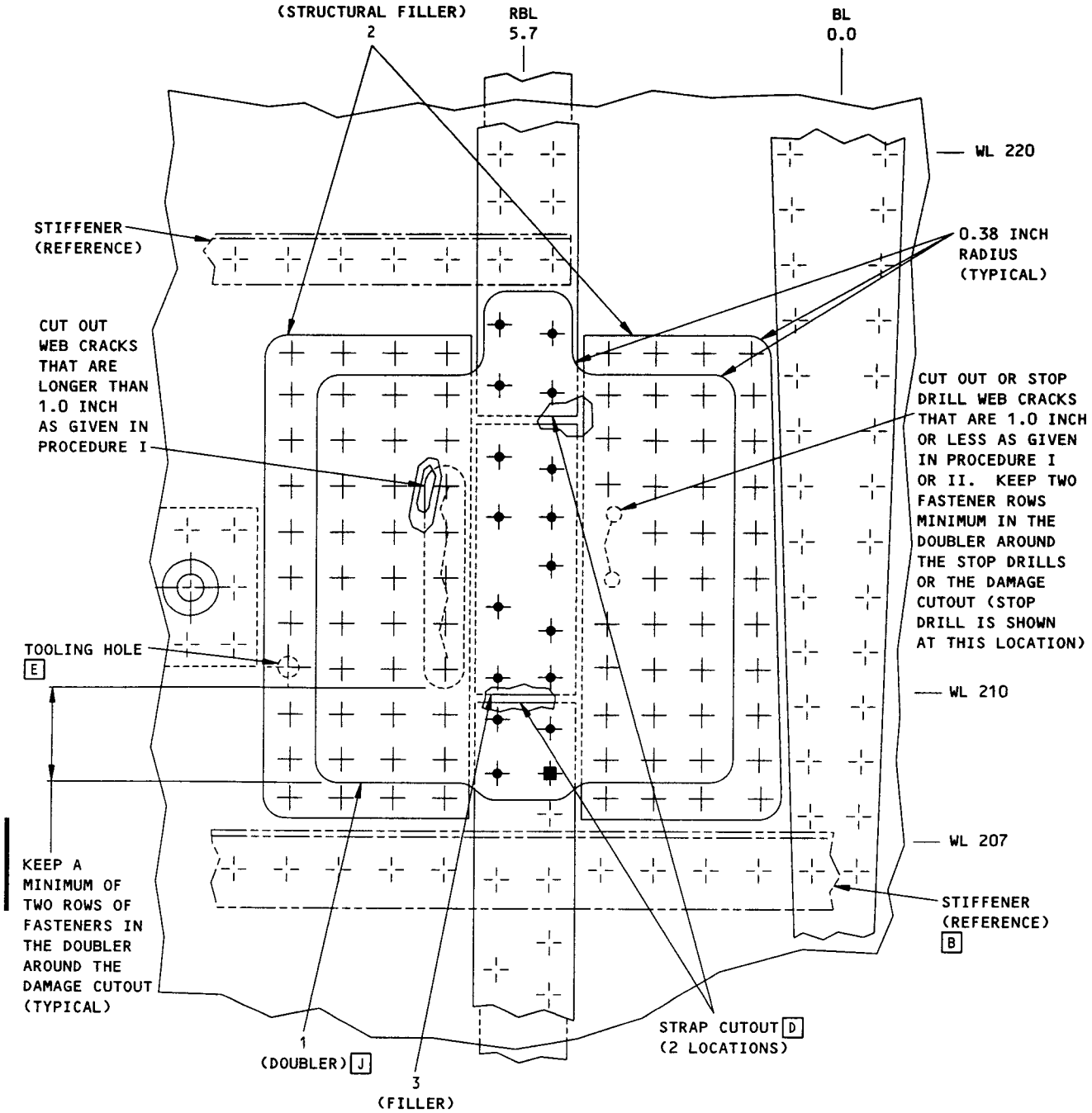

VIEW LOOKING AFT

INSTALLATION OF A PERMANENT OR TIME LIMITED REPAIR FOR CRACKS
BETWEEN WL 207 AND WL 218 AT RBL 5.7
(FOR STRAP CUT AT TWO LOCATIONS)
DETAIL III A C

BS 178 Bulkhead - Web Repair at LBL 5.7 or RBL 5.7 Between WL 195 and WL 220
Figure 9 (Sheet 7)

BOEING PROPRIETARY - Copyright © - Unpublished Work - See title page for details.

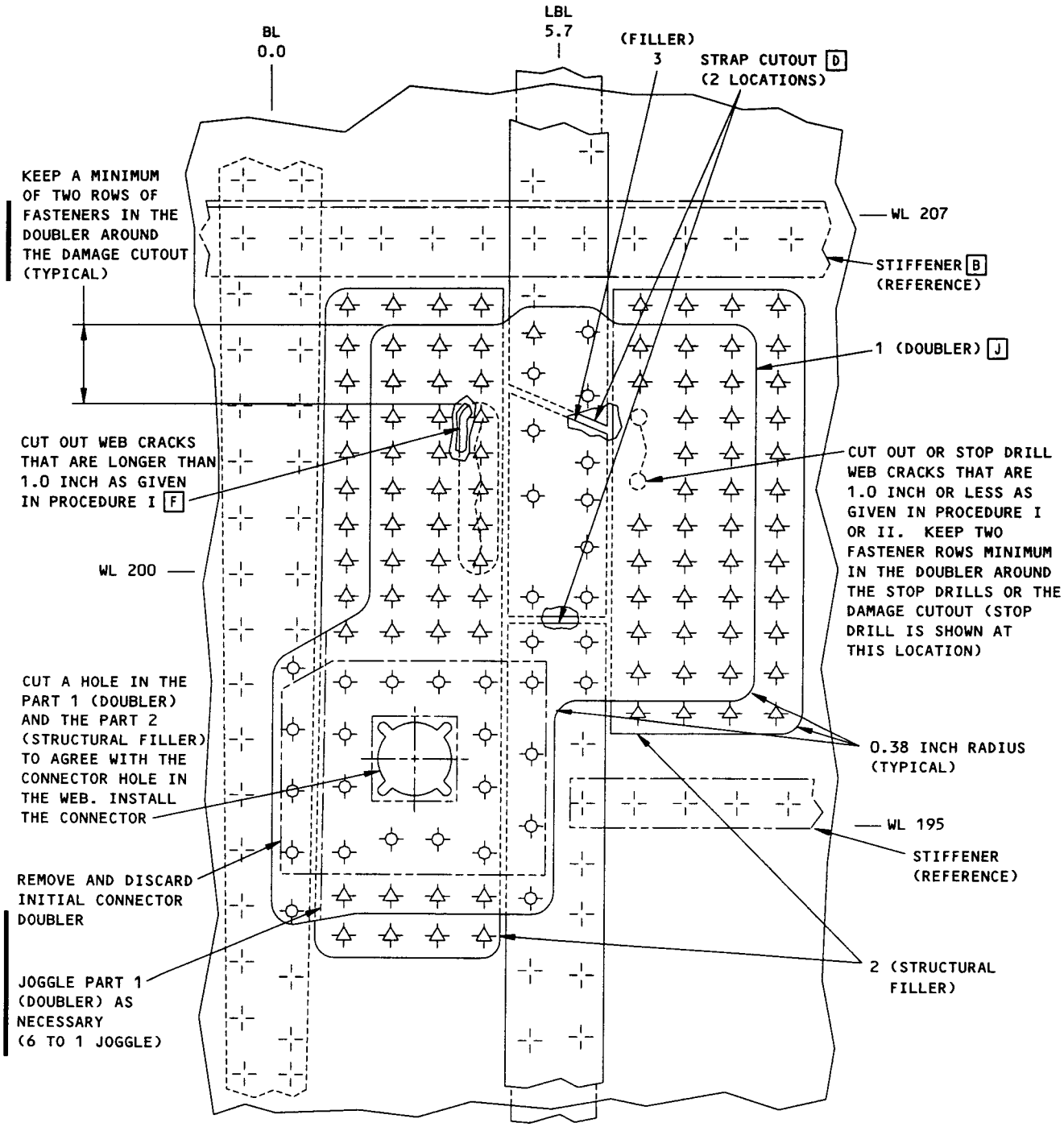

VIEW LOOKING AFT

INSTALLATION OF A REPAIR FOR CRACKS
BETWEEN WL 195 AND WL 207 AT LBL 5.7
(FOR STRAP CUT AT TWO LOCATIONS)
DETAIL IV C

BS 178 Bulkhead - Web Repair at LBL 5.7 or RBL 5.7 Between WL 195 and WL 220
Figure 9 (Sheet 8)

BOEING PROPRIETARY - Copyright © - Unpublished Work - See title page for details.

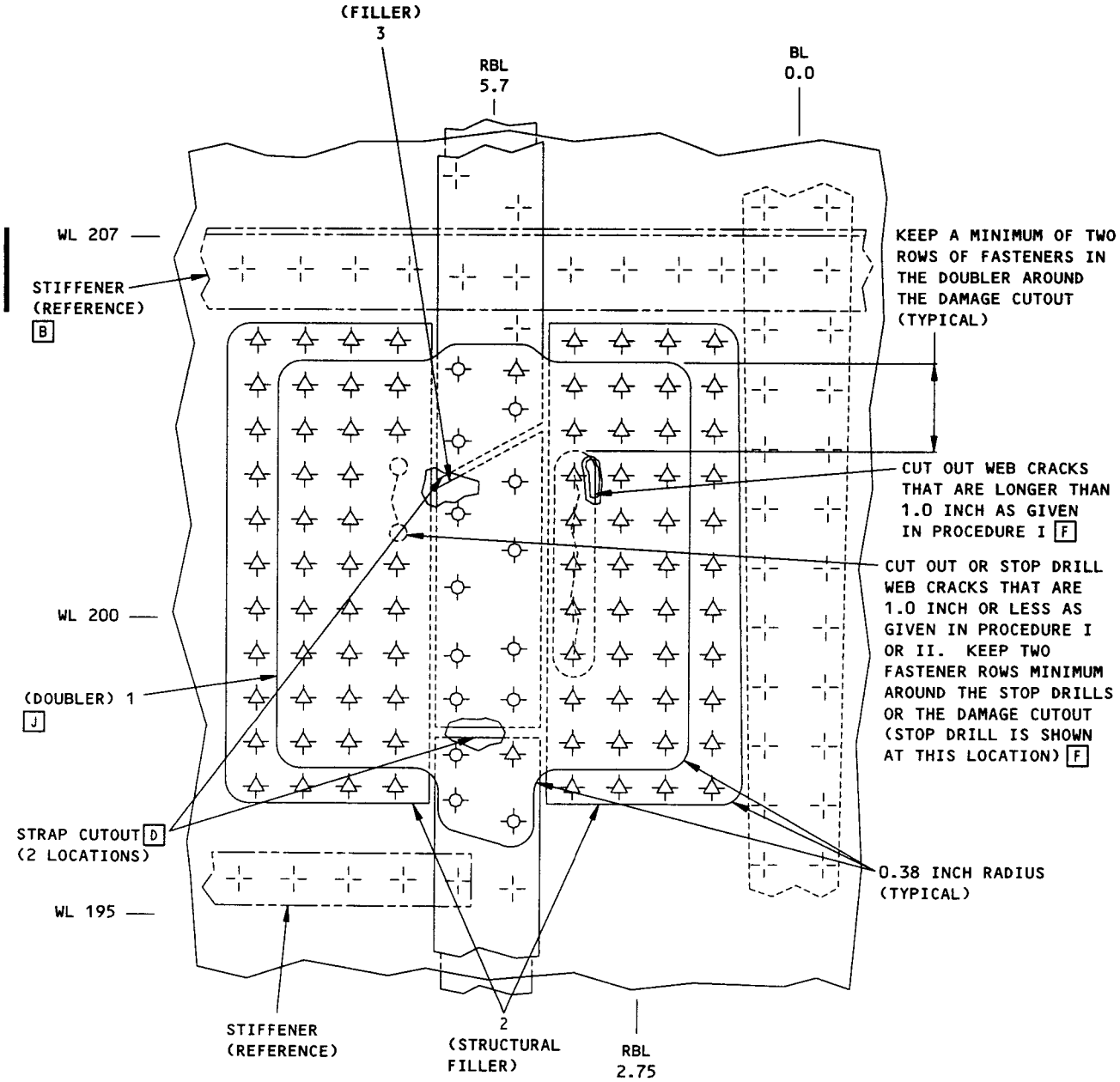

VIEW LOOKING AFT

INSTALLATION OF A REPAIR FOR CRACKS
BETWEEN WL 195 AND WL 207 AT RBL 5.7
(FOR STRAPS CUT AT TWO LOCATIONS)
DETAIL V C

BS 178 Bulkhead - Web Repair at LBL 5.7 or RBL 5.7 Between WL 195 and WL 220
Figure 9 (Sheet 9)

BOEING PROPRIETARY - Copyright © - Unpublished Work - See title page for details.

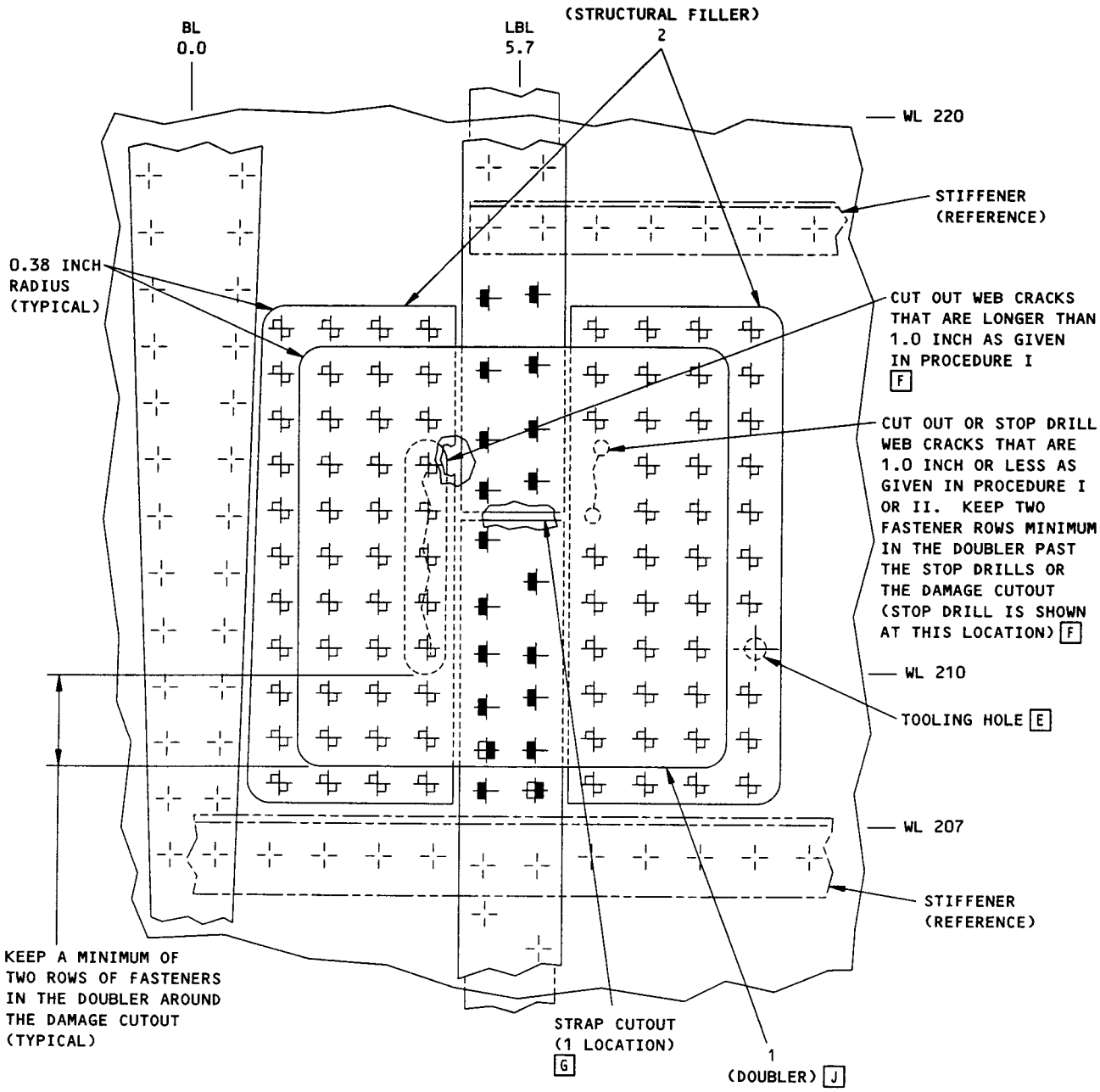

VIEW LOOKING AFT

TYPICAL INSTALLATION OF A WEB REPAIR FOR CRACKS
BETWEEN WL 195 AND WL 220 FOR STRAP CUT AT ONE LOCATION
(REPAIR IS SHOWN AT LBL 5.7, ABOVE WL 207)
(SIMILAR REPAIRS CAN BE USED AT RBL 5.7, ABOVE WL 207
AND AT LBL 5.7 AND RBL 5.7 BELOW WL 207)
DETAIL VI A C H

BS 178 Bulkhead - Web Repair at LBL 5.7 or RBL 5.7 Between WL 195 and WL 220
Figure 9 (Sheet 10)

BOEING PROPRIETARY - Copyright © - Unpublished Work - See title page for details.

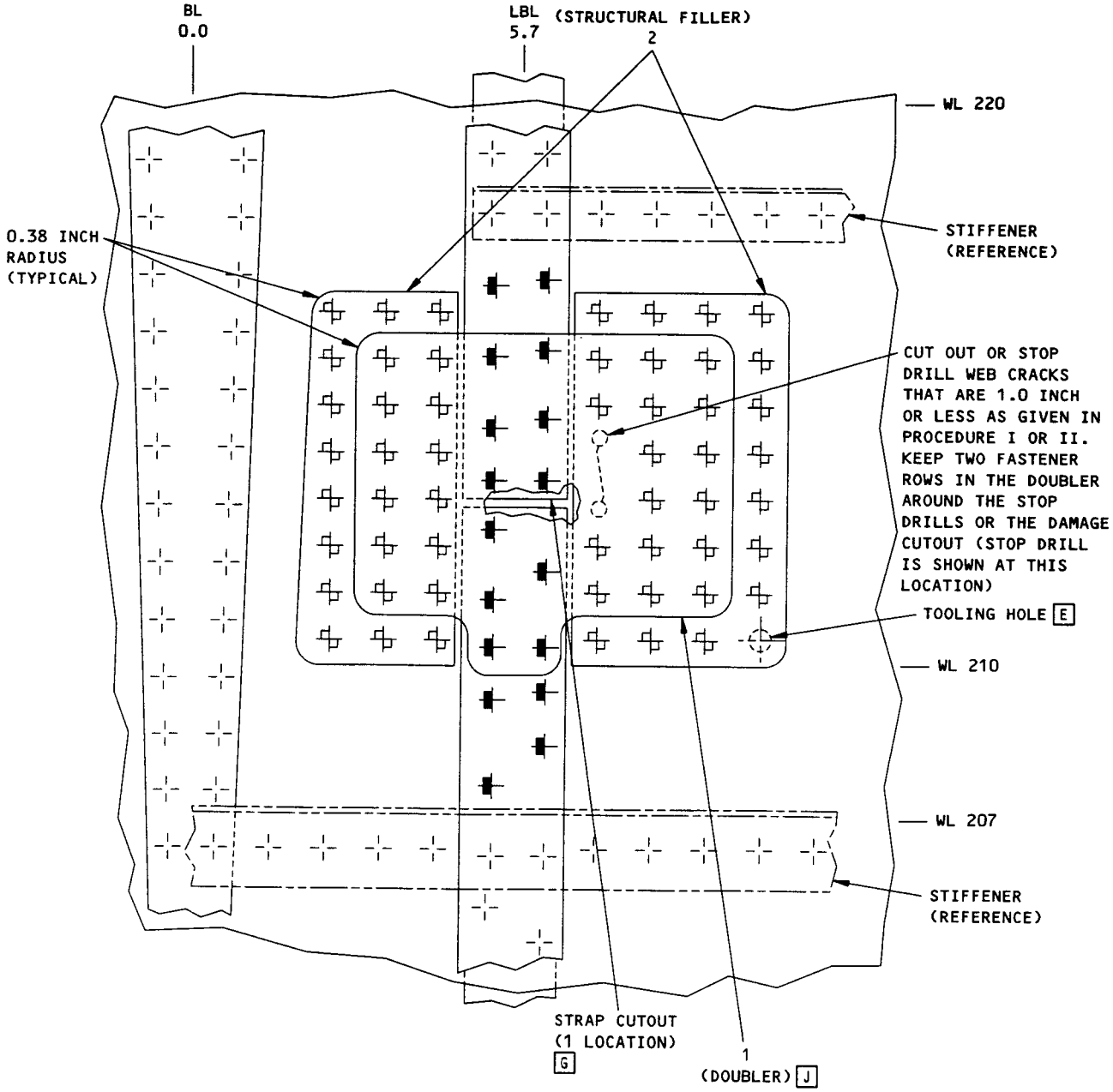

VIEW LOOKING AFT

TYPICAL WEB REPAIR FOR CRACKS SMALLER THAN MAXIMUM PERMITTED
AND A SINGLE CUT IN THE STRAP
(REPAIR IS SHOWN AT LBL 5.7, ABOVE WL 207)
(SIMILAR REPAIRS CAN BE USED AT RBL 5.7 ABOVE WL 207
AND AT LBL 5.7 AND RBL 5.7 BELOW WL 207)
DETAIL VII A C I H

BS 178 Bulkhead - Web Repair at LBL 5.7 or RBL 5.7 Between WL 195 and WL 220
Figure 9 (Sheet 11)

BOEING PROPRIETARY - Copyright © - Unpublished Work - See title page for details.

REPAIR INSTRUCTIONS

1. Open the nose radome and examine the bulkhead web for damage. Refer to SB 737-53A1173 for inspection procedures and the removal and installation of structures that are attached.
2. See Detail I to find the repair location for the damage found.
3. Remove the fasteners from the damaged web, stiffeners, chord or other structure as necessary. Remove channels and angle stiffeners, latches, or clips as necessary.

WARNING: Wear protective clothing and eye protection when you use solid carbon dioxide (dry ice). Make sure you have sufficent ventilation and do not use dry ice in an enclosed space. Dry ice can injure your skin or cause breathing problems.

CAUTION: Use special care to cut and remove the damaged area of the web. Do not gouge, scratch, or buckle the structure adjacent to the cutout. To protect the structure behind the web, put a thin steel sheet between the web and the structure behind it.

4. Separate the straps installed at LBL 5.7, BL 0.0, and RBL 5.7. Carefully drive nylon or hardwood wedges between the web and the straps. Start from the lower side of the pressure bulkhead. Use sufficient wedges to gradually separate the parts. Make sure the straps do not buckle.

   NOTE: To help separate the sealed parts, cold soak the area with solid carbon dioxide (dry ice) for approximately 30 minutes before you use the wedges.

5. Cut and remove the damaged part of the web. Cut out the minimum amount of material necessary to remove the damage. Make a radius that is a minimum 0.38 inch at each corner of the cut out. Make sure to keep a minimum 2.0 D fastener edge margin.
6. Do an HFEC inspection along the cutout to make sure there are no cracks. Refer to NDT Part 6, 51-00-00.
7. If there are no cracks, make the cutouts larger by 0.10 inch. The cutout must have a minimum radius of 0.38 inch. Make sure to keep a minimum 1.7 D fastener edge margin.
8. Make the repair parts. Refer to Table I. Make sure that the Part 1 (Doubler) has a minimum of two rows of fasteners on each side of cutout. [A] [B] [D] [E]
9. Temporarily assemble the repair parts and drill the fastener holes.
10. Keep the pull-up limit to a maximum of 0.010 inch. If shims are necessary, Refer to SRM 51-20-1.
11. Disassemble the repair parts.
12. Remove the nicks, scratches, gouges, burrs, and sharp edges from the repair parts and the initial parts.
13. Apply a chemical conversion coating to the repair parts and to the bare surfaces of the initial parts. Refer to SRM 51-10-2.
14. Apply one layer of BMS 10-11, Type I primer to the repair parts and to the bare surfaces of the initial parts. Refer to SOPM 20-41-02.
15. Install the repair parts with BMS 5-95 sealant between the mating surfaces. Apply fillet seals and fill all gaps with BMS 5-95 sealant. Refer to SRM 51-20-4.
16. Install the fasteners. Fasteners that are not made of aluminum must be installed wet with BMS 5-95 sealant.
17. Apply one layer of BMS 10-11 Type II enamel to the repair area. Refer to SOPM 20-41-02.
18. Apply corrosion inhibiting compound to the repair area. Refer to SRM 51-10-2.

NOTES

- THIS REPAIR IS APPROVED AS AN ALTERNATE METHOD OF COMPLIANCE TO AD 2000-05-29 PARAGRAPH "b". THIS ALTERNATE METHOD OF COMPLIANCE APPLIES ONLY TO THE REPAIRED AREA. INSPECTIONS IN THE NON REPAIRED AREAS MUST BE CONTINUED AS SPECIFIED IN AD 2000-05-29.
- A DAMAGE TOLERANCE ASSESSMENT IS NOT NECESSARY FOR FLAT PRESSURE BULKHEAD WEB REPAIRS IF EXTERNAL GENERAL VISUAL (SURVEILLANCE) INSPECTION INTERVALS ARE NOT MORE THAN 8,000 FLIGHT CYCLES. THUS, THESE WEB REPAIRS ARE NOT SUBJECT TO THE REPAIR ASSESSMENT PROGRAM SPECIFIED IN SRM 51-00-6.
- THESE REPAIRS WILL NOT HAVE AN EFFECT ON THE STRUCTURALLY SIGNIFICANT ITEMS GIVEN IN SRM 51-00-4, FIGURE 3. THUS, NO CHANGE TO THE SUPPLEMENTAL STRUCTURAL INSPECTION DOCUMENT (SSID) INSPECTION PROGRAM IS NECESSARY.

BS 178 Bulkhead - Web Repair Between LBL 7.5 and RBL 7.5
From WL 184.0 to WL 218.0
Figure 10 (Sheet 1)

BOEING PROPRIETARY - Copyright © - Unpublished Work - See title page for details.

NOTES (CONTINUED)

- D = FASTENER DIAMETER
- FOR THE REPAIR FASTENER LOCATION USE SAME FASTENER SPACING USED IN ADJACENT STRUCTURE. FASTENER SPACING MUST BE 4D-6D.
- USE SHIMS, FILLERS OR TAPPERD FILLERS SO THAT THE GAP BETWEEN THE PARTS IS NOT LARGER THAN 0.010 INCH BEFORE FASTENER INSTALLATION.
- UNLESS OTHERWISE NOTED KEEP A MINIMUM EDGE MARGIN OF 2D.
- WHEN YOU USE THIS REPAIR REFER TO:
  - SOPM 20-41-02 FOR APPLICATION OF FINISHES
  - NDT PART 6, 51-00-00 FOR EDDY CURRENT INSPECTION OF THE FUSELAGE SKIN
  - NDT PART 6, 51-30-00 FOR EDDY CURRENT INSPECTION OF FASTENER HOLES IN THE FUSELAGE SKIN
  - SRM 51-10-1 FOR INVESTIGATION AND CLEANUP OF DAMAGE
  - SRM 51-10-2 FOR PROTECTIVE TREATMENT OF METAL
  - SRM 51-20-4 FOR REPAIR SEALING
  - SRM 51-20-1 FOR SHEET METAL AND FLAT PATTERN DATA, RULES OF SHIMMING.
  - SRM 51-30 FOR FASTENER CODES, INSTALLATION AND REMOVAL, HOLE SIZES AND EDGE MARGINS.

[A] MAKE SURE THAT A MINIMUM OF FOUR FASTENERS COMMON TO THE STRAP AND PART 1 (DOUBLER) ARE ABOVE AND BELOW ANY WEB DAMAGE CUTOUT.

[B] IF YOU HAVE ELECTRICAL CONNECTORS IN THE REPAIR AREA, MAKE SURE THAT THE END OF THE WEB CUTOUT IS AT LEAST TWO FASTENER ROWS AWAY FROM THE CONNECTOR CUTOUT.

[C] PEEL THE STRAP FOR WEB INSPECTION AND WEB DAMAGE TRIMOUT. MAKE SURE YOU DO NOT DAMAGE THE STRAP.

[D] YOU CAN REDUCE OR INCREASE THE SIZE OF THE DOUBLER. MAKE SURE YOU KEEP TWO FASTENER ROWS IN THE DOUBLER, PAST THE WEB DAMAGE CUTOUT. YOU MUST HAVE A MINIMUM OF 0.50 INCH BETWEEN THE EDGE OF THE PART 1 (DOUBLER) AND ANY STIFFENER. IF YOU DO NOT HAVE A MINIMUM 0.50 INCH FROM THE STIFFENER, THE DOUBLER MUST GO UNDER THE STIFFENER AND HAVE A MINIMUM OF 2 FASTENER ROWS ON THE FAR SIDE OF THE STIFFENER.

[E] WHEN THERE ARE WEB CRACKS ON ONLY THE BL 0.0 SIDE OF BL 5.7 STRAPS (RBL 5.7 OR LBL 5.7) IT IS PERMITTED TO REDUCE THE SIZE OF THE DOUBLER ON THE SIDE OF THE STRAP WHERE THE WEB IS NOT CRACKED. MAKE SURE AND KEEP A MINIMUM TWO ROWS OF FASTENERS IN THE DOUBLER FROM THE EDGE OF THE STRAP, ON THE SIDE WHERE THE WEB IS NOT CRACKED.

[F] THE SIZE OF THE PART 1 (DOUBLER) DETERMINES THE QUANTITY OF THE PART 3 (SOLID SHIM) AND PART 4 (TAPERED SHIM).

[G] INSTALL THE PART 2 (FILLER) IN THE WEB CUTOUT WHERE THERE IS INITIAL STRUCTURE ON THE AFT SIDE OF THE WEB.

[H] YOU CAN INSTALL A DIFFERENT THICKNESS OF LAMINATED SHIM MATERIAL IF NECESSARY.

[I] IT IS OPTIONAL TO INSTALL PART 5 (LAMINATED SHIM), AND NOT PART 3 (SOLID SHIM) IF YOU CAN GET THE CORRECT THICKNESS OF PART 5 FOR THE GAP FOUND.

[J] IF THE INITIAL SHIMS ARE DAMAGED MAKE NEW SHIMS TO MATCH INITIAL SHIMS. USE SAME MATERIAL AS THE INITIAL SHIMS.

[K] REPLACE ALL FASTENERS COMMON TO THE STIFFENER AND NOT SHOWN AS FOLLOW:
- REPLACE ALL 5/32 INCH DIAMETER RIVETS WITH ⊕ .
- REPLACE ALL 3/16 INCH DIAMETER LOCKBOLTS WITH ⊕ .
- REPLACE ALL 1/4 INCH DIAMETER RIVETS WITH BACB30MY8K()Y HEX DRIVE BOLT WITH BACC30R8 COLLARS.
- REPLACE ALL 1/4 INCH DIAMETER LOCKBOLTS WITH BACB30MY8K()X HEX DRIVE BOLT WITH BACC30M8 COLLARS.

BS 178 Bulkhead - Web Repair Between LBL 7.5 and RBL 7.5
From WL 184.0 to WL 218.0
Figure 10 (Sheet 2)

BOEING PROPRIETARY - Copyright © - Unpublished Work - See title page for details.

FASTENER SYMBOLS

- REFERENCE FASTENER LOCATION.
- INITIAL FASTENER LOCATION. INSTALL A BACB30MY6K()X HEX DRIVE BOLT WITH A BACC30M6 COLLAR. AS AN ALTERNATIVE INSTALL A BACB30MY6K()Y HEX DRIVE BOLT WITH BACC30R6 COLLARS. MAKE SURE YOU HAVE A MINIMUM 1.7 D EDGE MARGIN.
- INITIAL FASTENER LOCATION. INSTALL A BACB30MY6K()Y HEX DRIVE BOLT WITH A BACC30R6 COLLAR.
- INITIAL FASTENER LOCATION. INSTALL A BACB30MY6K() HEX DRIVE BOLT WITH A BACC30M6 COLLAR.
- REPAIR FASTENER LOCATION. INSTALL A BACB30MY6K() HEX DRIVE BOLT WITH A BACC30M6 COLLAR.
- INITIAL FASTENER LOCATION. INSTALL A BACB30NX6K()X HEX DRIVE BOLT WITH A BACC30X6 COLLAR.
- INITIAL FASTENER LOCATION. INSTALL A BACB30NX6K()Y HEX DRIVE BOLT WITH A BACC30AC6 COLLAR. MAKE SURE YOU HAVE A MINIMUM 1.7 D EDGE MARGIN.

REPAIR MATERIAL			
PART		QTY	MATERIAL
1	DOUBLER	1	2024-T3 CLAD SHEET 0.050 THICK
2	FILLER	G	2024-T3 CLAD SHEET 0.032 THICK
3	SOLID SHIM	F	2024-T3 CLAD SHEET 0.050 THICK
4	TAPERED SHIM	F	2024-T3 CLAD SHEET THICKNESS AS NECESSARY 100:1 MINIMUM TAPER RATIO
5	LAMINATED SHIM	F	LAMINATED ALUMINUM SHIM, BACS40R*C*P OR AN EQUIVALENT H

TABLE I

BS 178 Bulkhead - Web Repair Between LBL 7.5 and RBL 7.5
From WL 184.0 to WL 218.0
Figure 10 (Sheet 3)

BOEING PROPRIETARY - Copyright © - Unpublished Work - See title page for details.

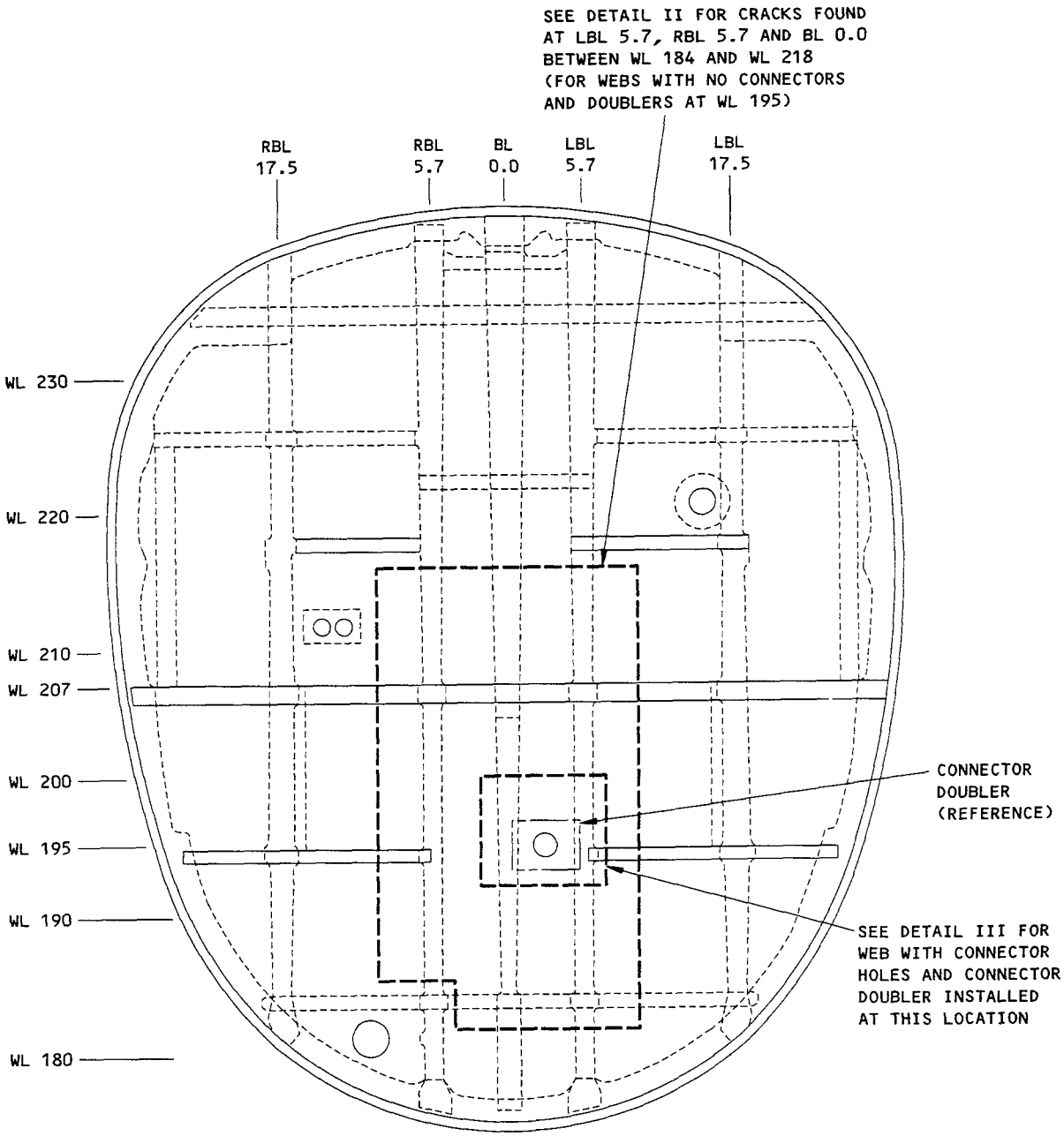

VIEW LOOKING AFT

BS 178 BULKHEAD - REPAIR LOCATIONS FOR CRACKS BETWEEN RBL 7.5 AND LBL 7.5 FROM WL 184 TO WL 218
DETAIL I

BS 178 Bulkhead - Web Repair Between LBL 7.5 and RBL 7.5 From WL 184.0 and to WL 218.0
Figure 10 (Sheet 4)

BOEING PROPRIETARY - Copyright © - Unpublished Work - See title page for details.

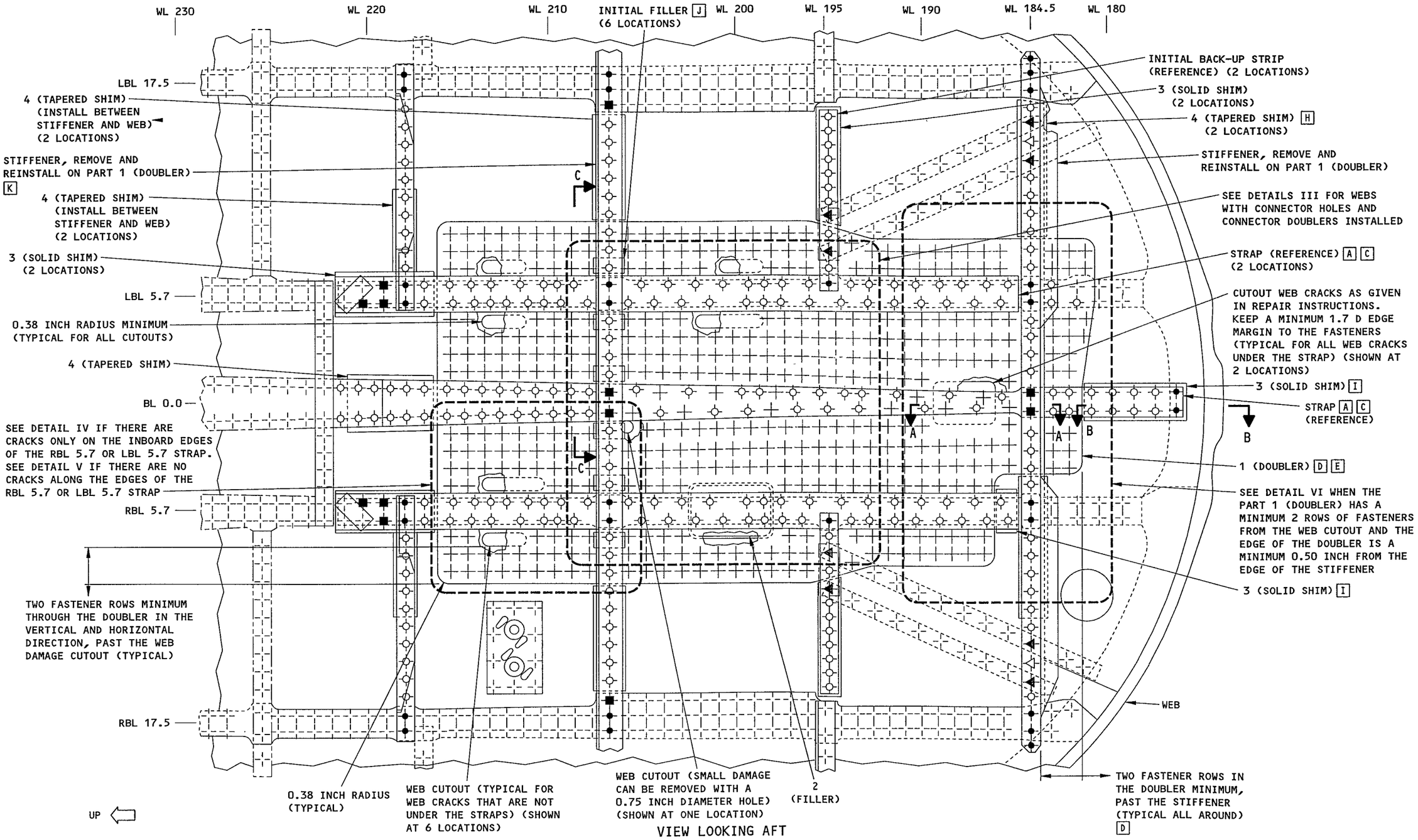

VIEW LOOKING AFT
DETAIL II

BS 178 Bulkhead - Web Repair Between LBL 7.5 and RBL 7.5
From WL 184.0 to WL 218.0
Figure 10 (Sheet 5)

M19689

BOEING PROPRIETARY - Copyright © - Unpublished Work - See title page for details.

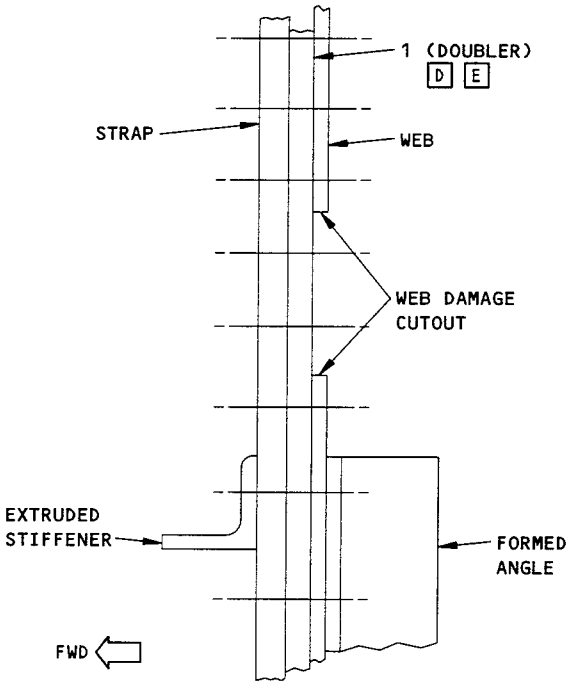

VIEW IS ROTATED 90° CLOCKWISE

SECTION A-A

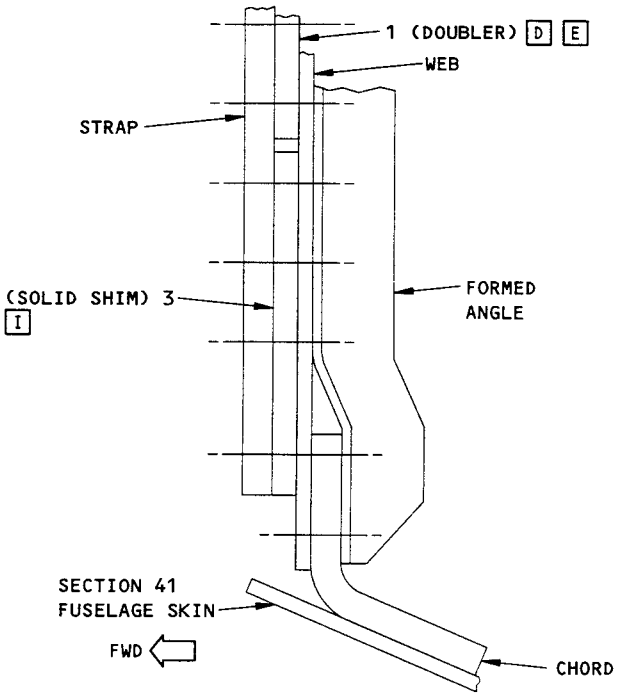

VIEW IS ROTATED 90° CLOCKWISE

SECTION B-B

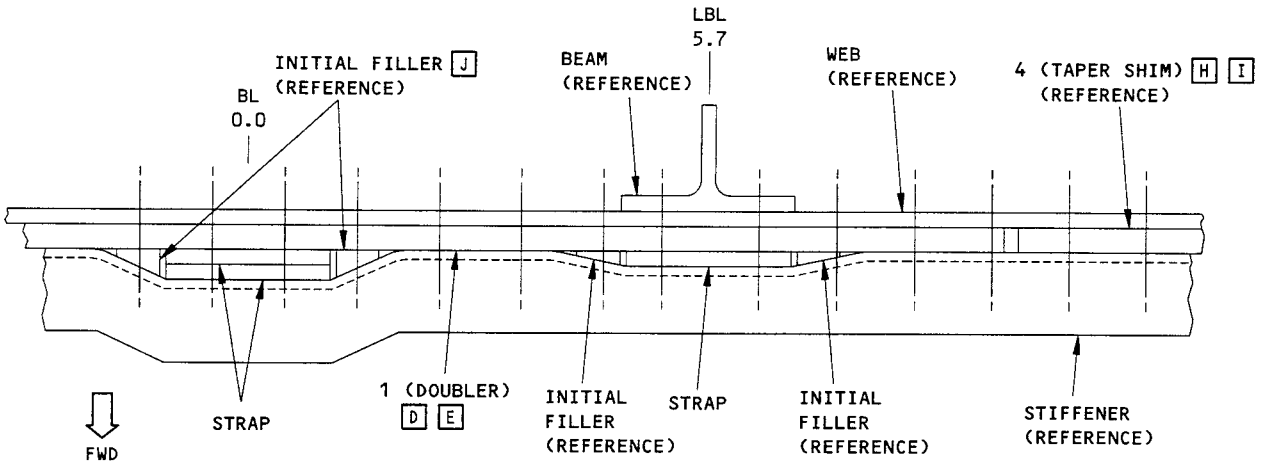

VIEW IS ROTATED 90° CLOCKWISE

SECTION C-C

BS 178 Bulkhead - Web Repair Between LBL 7.5 and RBL 7.5
From WL 184.0 to WL 218.0
Figure 10 (Sheet 6)

BOEING PROPRIETARY - Copyright © - Unpublished Work - See title page for details.

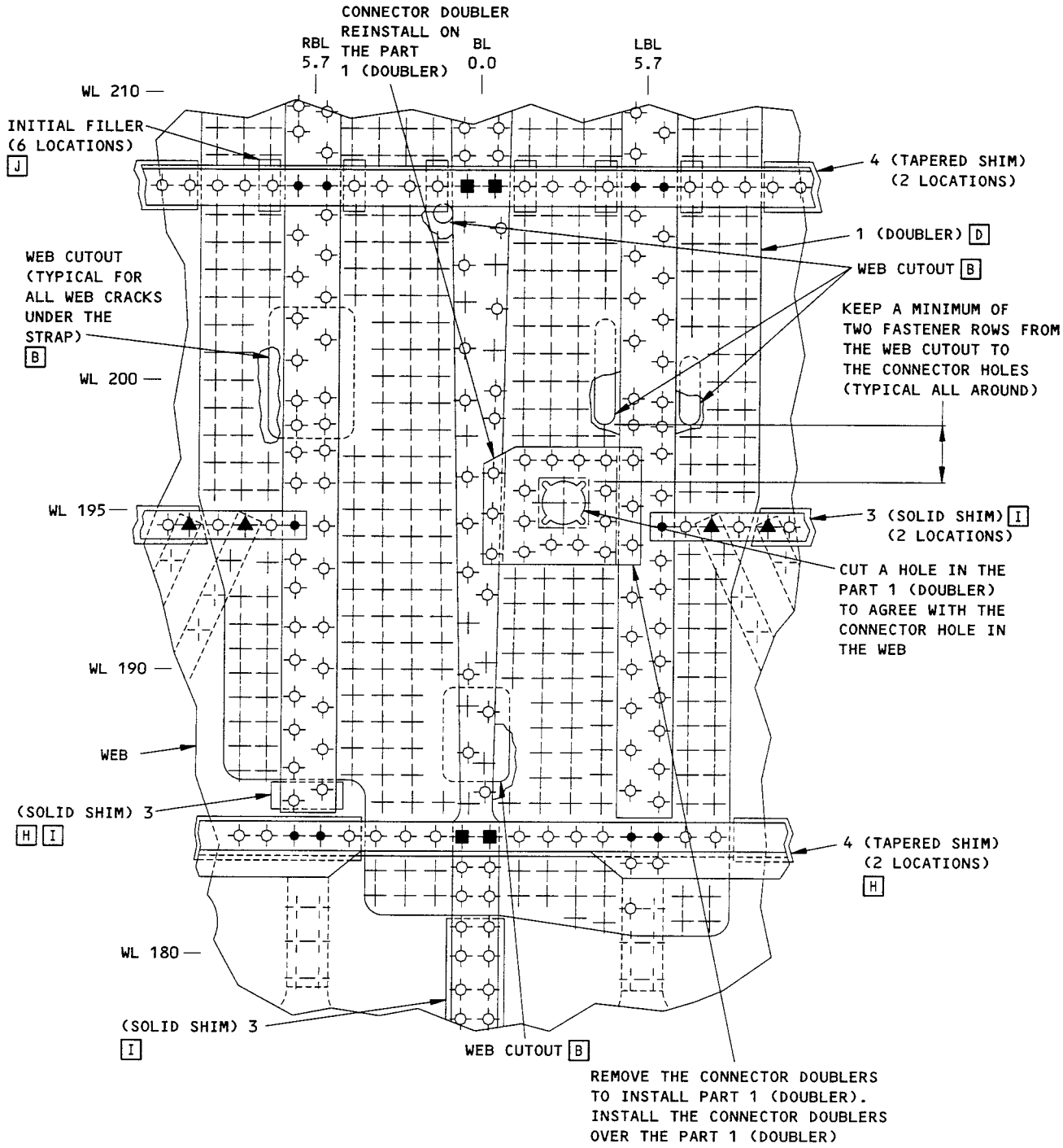

VIEW LOOKING AFT

VIEW IS ROTATED 90° CLOCKWISE

DETAIL III

BS 178 Bulkhead - Web Repair Between LBL 7.5 and RBL 7.5
From WL 184.0 to WL 218.0
Figure 10 (Sheet 7)

BOEING PROPRIETARY - Copyright © - Unpublished Work - See title page for details.

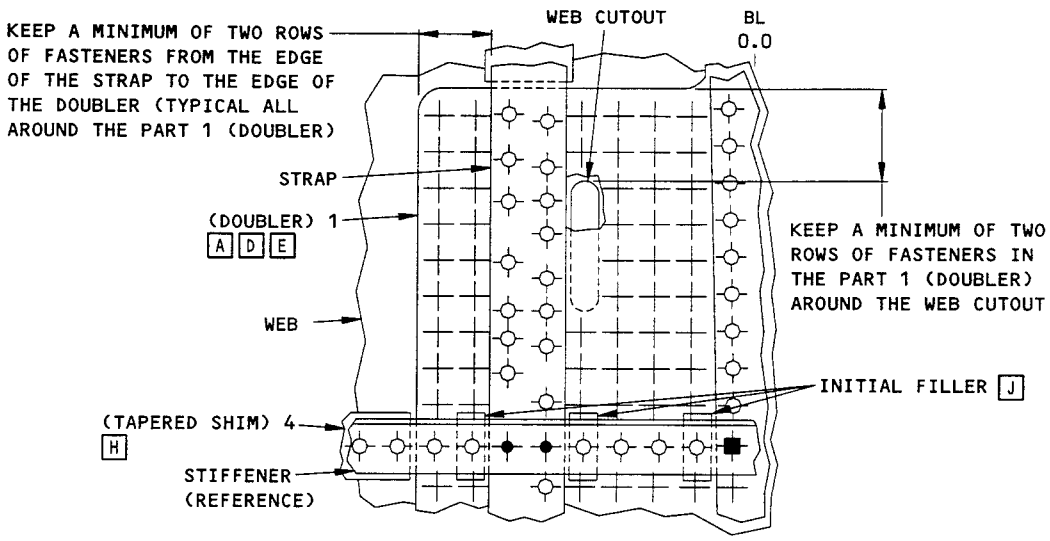

VIEW LOOKING AFT
VIEW IS ROTATED 90° CLOCKWISE
DOUBLER WITH NO CRACKS OUTBOARD
OF THE STRAP AT RBL 5.7 OR LBL 5.7
DETAIL IV

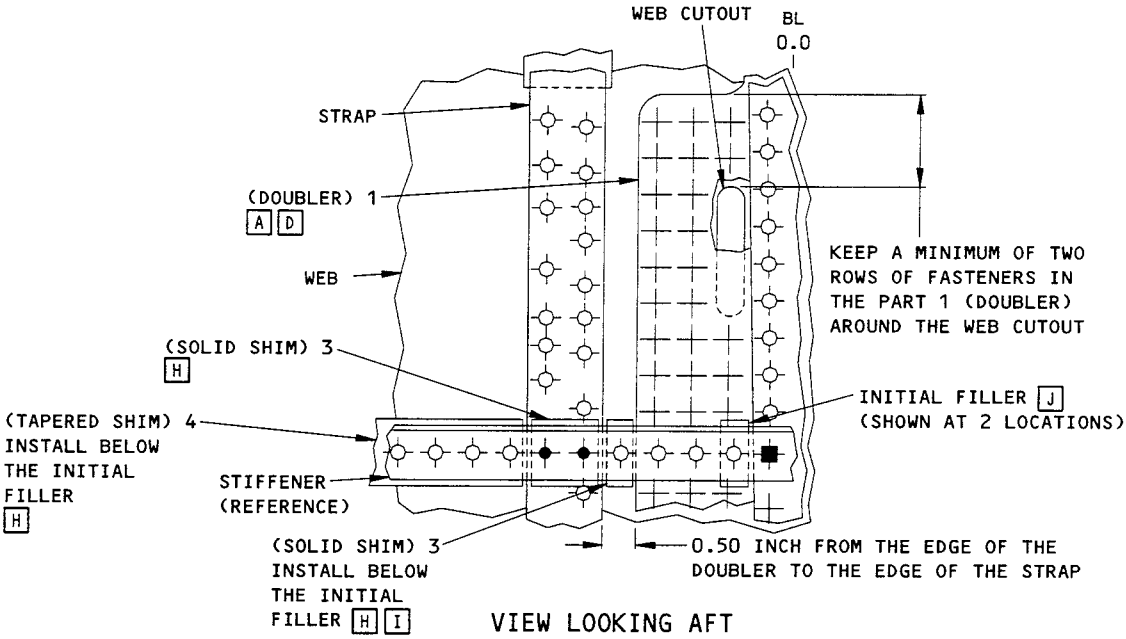

VIEW LOOKING AFT
VIEW IS ROTATED 90° CLOCKWISE
DOUBLER WITH NO CRACKS
BY THE STRAP AT RBL 5.7 OR LBL 5.7
DETAIL V

BS 178 Bulkhead - Web Repair Between LBL 7.5 and RBL 7.5
From WL 184.0 to WL 218.0
Figure 10 (Sheet 8)

BOEING PROPRIETARY - Copyright © - Unpublished Work - See title page for details.

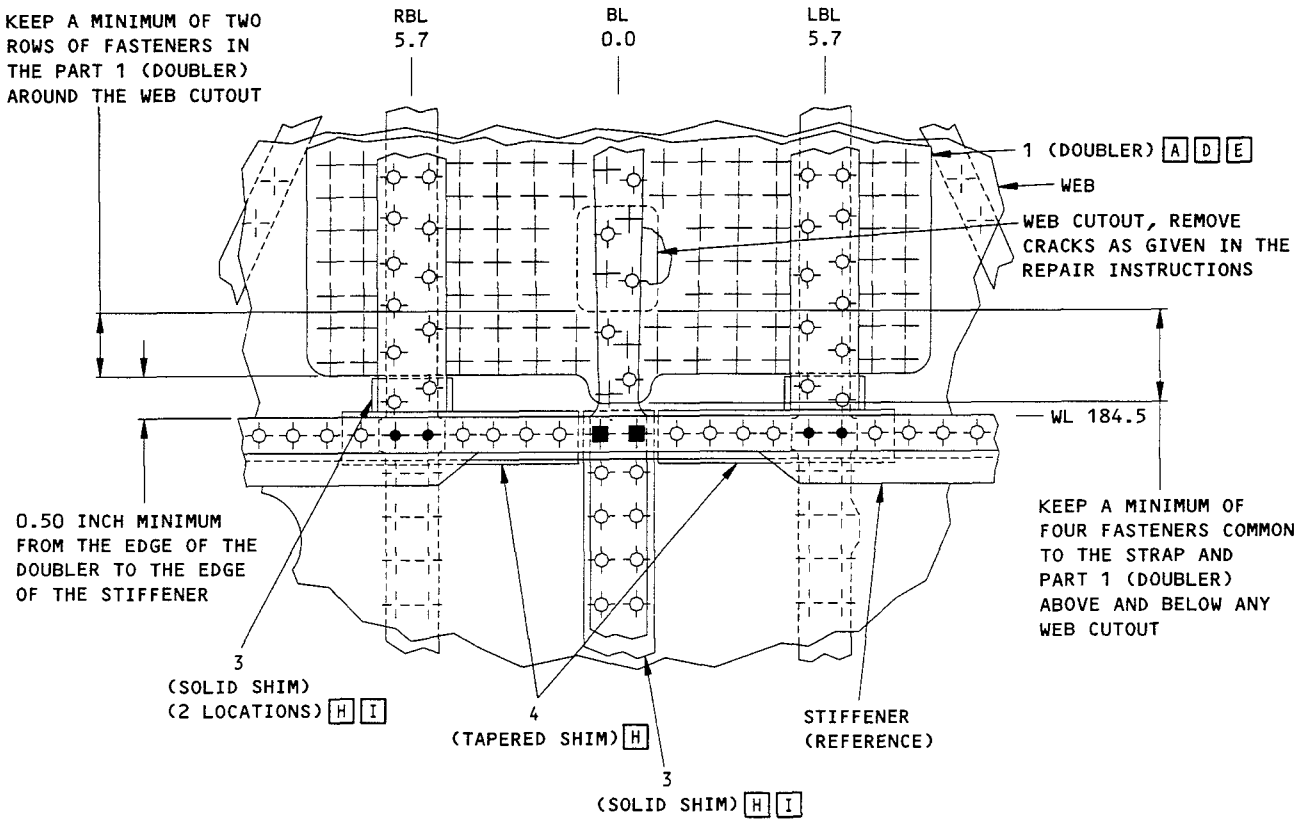

VIEW LOOKING AFT
VIEW IS ROTATED 90° CLOCKWISE

DETAIL VI

BS 178 Bulkhead - Web Repair Between LBL 7.5 and RBL 7.5
From WL 184.0 to WL 218.0
Figure 10 (Sheet 9)

BOEING PROPRIETARY - Copyright © - Unpublished Work - See title page for details.

REPAIR INSTRUCTIONS

1. Open the nose radome. Refer to SB 737-53A1225 for the removal and installation of structures that are attached.
2. Get Access to the aft side of the forward pressure bulkhead at Station 178 through the forward access door.

   WARNING: Make sure that the electrical power for the weather radar is off and the circuit breakers for the weather radar are open and tagged with "DO NOT OPERATE".

3. Remove system components as applicable to get access to each damaged BL 5.7 and 17.1 vertical beam. Remove the insulation blankets. Refer to SB 737-53A1225, SB 737-53A1173, and SB 737-53A1208.
4. Examine each vertical beam (located at LBL 5.7, RBL 5.7, LBL 17.1, and RBL 17.1) for damage. Inspect the vertical beams as shown in SB 737-53A1225 latest revision.
5. Refer to Detail I. If the damage is located at:
   - LBL 17.1 or RBL 17.1, do the repair as shown in Detail II, III, IV, V, or VI.
   - LBL 5.7, do the repair as shown in Detail VII.
   - RBL 5.7, do the repair as shown in Detail VIII.
6. Remove the fasteners from the damaged web, stiffeners, chord or other structure as necessary. Remove angle stiffeners or clips as necessary. Remove a sufficient number of fasteners to permit the web to be separated from the chords in the area of the web cutout.

   WARNING: Wear protective clothing and eye protection when you use solid carbon dioxide (dry ice). Make sure you have sufficient ventilation and do not use dry ice in an enclosed space. Dry ice can injure your skin or cause breathing problems.

   CAUTION: Use special care to cut and remove the damaged area of the web. Do not gouge, scratch, or buckle the structure behind the web, put a thin steel sheet between the vertical beam web and the structure behind it.

7. Carefully drive nylon or hardwood wedges between the web and chords in the area where a crack has occurred. Use sufficient wedges to gradually separate the parts and prevent buckling.
8. Cut out and remove the damaged part of the web as shown in Detail II, III, IV, V, VI, VII, or VIII.
9. Do an HFEC inspection along the cutout to make sure there are no cracks along the edge of the cutout.
10. If there are no cracks, remove an additional 0.10 inch from the edge of the web. Make sure and keep a minimum of 1.7D edge margin for the initial fasteners.
11. Make the repair parts. Make the new web with the same geometry as the initial web, except longer as shown in each applicable detail. Refer to Table I.
12. Temporarily assemble the repair parts and drill the fastener holes.
13. Disassemble the repair parts.
14. Remove the nicks, scratches, gouges, burrs, and sharp edges from the repair parts and the initial parts.
15. Apply a chemical conversion coating to the repair parts and to the bare surfaces of the initial parts. Refer to SRM 51-10-2.
16. Apply two layers of BMS 10-11, Type I primer to the repair parts and to the bare surfaces of the initial parts. Refer to SOPM 20-41-02.
17. Keep the pull-up limit to a maximum of 0.010 inch. If shims are necessary, refer to SRM 51-20-1.
18. Install the repair parts and the removed parts that must to be re-installed. Install the parts with BMS 5-95 sealant between the mating surfaces. Apply fillet seals and fill all gaps with BMS 5-95 sealant. Refer to SRM 51-20-4.
19. Install the fasteners. Fasteners that are not made of aluminum must be installed wet with BMS 5-95 sealant.
20. Re-install applicable systems components as given in SB 737-53A1225 and SB 737-53A1173 and 737-53A1208. Refer to the Maintenance Manual procedures given in the service bulletins.
21. Apply corrosion inhibiting compound to the repair area. Refer to SRM 51-10-02.

BS 178 Vertical Beams -
Interim Web Repair at LBL 5.7, RBL 5.7, LBL 17.1 and RBL 17.1
Figure 11 (Sheet 1)

BOEING PROPRIETARY - Copyright © - Unpublished Work - See title page for details.

NOTES

- THIS REPAIR IS APPROVED AS AN INTERIM REPAIR. THIS REPAIR HAS FAA APPROVAL IF YOU INSPECT THE REPAIRED WEB THE SAME AS THE UNREPAIRED WEB. INSPECT THE REPAIRED WEB AS SPECIFIED IN SB 737-53A1225.
- IF YOU HAVE DONE A BL 5.7 CHORD REPAIR OR MODIFICATION GIVEN IN EITHER SB 737-53A1173 OR SB 737-53A1208, DO NOT USE THE FORWARD CHORD FASTENER TYPE AND SIZE GIVEN IN THIS REPAIR. USE THE FORWARD CHORD FASTENER TYPE AND SIZE GIVEN IN SB 737-53A1173 OR SB 737-53A1208 AT THE FORWARD CHORD FASTENER LOCATIONS SHOWN IN DETAILS VII OR VIII.
- IF YOU HAVE DONE A BL 5.7 CHORD REPAIR GIVEN IN THIS SRM, DO NOT USE THE FORWARD CHORD FASTENER TYPE AND SIZE GIVEN IN THIS REPAIR. USE THE FORWARD CHORD FASTENER TYPE AND SIZE GIVEN IN THE INITIAL SRM BL 5.7 CHORD REPAIR AT THE FORWARD CHORD FASTENER LOCATIONS SHOWN IN DETAILS VII OR VIII.
- THESE REPAIRS WILL NOT HAVE AN EFFECT ON THE STRUCTURALLY SIGNIFICANT ITEMS GIVEN IN SRM 51-00-4, FIGURE 3. THUS, NO CHANGE TO THE SUPPLEMENTAL STRUCTURAL INSPECTION DOCUMENT (SSID) INSPECTION PROGRAM IS NECESSARY.
- D = FASTENER DIAMETER
- FOR THE REPAIR FASTENER LOCATION USE THE SAME FASTENER SPACING USED IN ADJACENT STRUCTURE. THE NEW FASTENER SPACING MUST BE 4D-6D.

  USE SHIMS, FILLERS, OR TAPERED FILLERS SO THAT THE CLEARANCE BETWEEN THE PARTS IS NOT LARGER THAN 0.010 INCH BEFORE THE FASTENER INSTALLATION.
- **WHEN YOU USE THIS REPAIR REFER TO:**
  - SOPM 20-41-02 FOR APPLICATION OF CHEMICAL AND SOLVENT RESISTANT FINISHES
  - NDT PART 6, 51-00-00 FOR EDDY CURRENT INSPECTION OF THE FUSELAGE SKIN
  - NDT PART 6, 53-30-00 FOR EDDY CURRENT INSPECTION OF FASTENER HOLES IN THE FUSELAGE SKIN
  - SRM 51-10-1 FOR INSPECTION AND REMOVAL OF DAMAGE
  - SRM 51-20-1 FOR SHEET METAL AND FLAT PATTERN DATA, RULES OF SHIMMING
  - SRM 51-10-2 FOR PROTECTIVE TREATMENT OF METAL
  - SRM 51-20-04 FOR REPAIR SEALING
  - SRM 51-30 FOR FASTENER CODES, INSTALLATION AND REMOVAL, HOLE SIZES AND EDGE MARGINS

A KEEP A MINIMUM OF TWO ROWS OF FASTENERS THROUGH THE INITIAL WEB AND THE NEW WEB. KEEP A MIMIMUM OF TWO ROWS OF FASTENERS ON EACH SIDE OF THE INITIAL WEB EDGE CUTOUT, THROUGH THE WEBS AND REPAIR DOUBLER.

B IF IT IS NECESSARY TO REMOVE PARTS FROM AFT OR FORWARD OF THE BS 178 WEB REFER TO SB 737-53A1173, SB 737-53A1208, AND SB 737-53A1225.

C MAKE SURE AND KEEP THE NEW WEB OR THE DOUBLER A MINIMUM OF ONE ROW OF FASTENERS FROM THE EDGE OF ANY INITIAL WEB DOUBLER OR STIFFENER. IF THE EDGE OF THE NEW WEB OR REPAIR DOUBLER WILL BE ADJACENT TO THE EDGE OF AN INITIAL STIFFENER INCREASE THE LENGTH OF THE WEB OR THE REPAIR DOUBLER ONE ROW OF FASTENERS PAST THE EDGE OF THE STIFFENER.

D YOU CAN USE THE REPAIR SHOWN IN DETAIL II, III OR VI TO REPAIR ANY WEB DAMAGE OF THE VERTICAL BEAM LOCATED AT LBL 17.1 OR RBL 17.1 IF:

- THERE IS NO INITIAL DOUBLER AT THE REPAIR LOCATION, AND
- A MINIMUM OF ONE ROW OF FASTENERS EXIST BETWEEN THE EDGE OF THE NEW WEB OR REPAIR DOUBLER AND THE EDGE OF AN ADJACENT STIFFENER OR EDGE OF A DOUBLER, AND
- YOU MAKE THE NEW WEB OR REPAIR DOUBLER FROM THE SAME MATERIAL AS THE INITIAL WEB. THE GAUGE OF THE NEW WEB OR DOUBLER IS DEFINED IN TABLE I.

E KEEP A MINIMUM EDGE MARGIN OF 1.7D FOR ALL REPAIR FASTENERS.

F TRANSFER ALL HOLES FOR THE LINING RETAINER IN THE NEW WEB REPAIR OR REPAIR DOUBLER. DO NOT TRANSFER THE TOOLING HOLES. MAKE SURE THERE IS A MINIMUM OF 4D-6D SPACING TO THE NEW FASTENER HOLE, AND CONTROL CABLE HOLES. KEEP A MINIMUM 1.7D EDGE MARGIN FOR ALL FASTENERS.

G IF NECESSARY YOU CAN INSTALL THE NEW WEB UNDER THE INITIAL WEB. MAKE SURE YOU INSTALL THE TAPERED SHIM UNDER THE INITIAL WEB.

BS 178 Vertical Beams -
Interim Web Repair at LBL 5.7, RBL 5.7, LBL 17.1 and RBL 17.1
Figure 11 (Sheet 2)

M21606

BOEING PROPRIETARY - Copyright © - Unpublished Work - See title page for details.

NOTES (CONTINUED)

[H] YOU CAN CUT THE WEB AT TWO LOCATIONS AND INSTALL A REPAIR DOUBLER AS SHOWN IN DETAIL VI FOR SMALL DAMAGES IF:

- YOU HAVE A MINIMUM OF ONE ROW OF FASTENERS BETWEEN THE EDGE OF THE REPAIR DOUBLER AND THE EDGE OF ANY ADJACENT STIFFENER OR EDGE OF AN INITIAL DOUBLER, AND;
- THE CUTOUT IS LOCATED IN THE MIDDLE OF THE INITIAL WEB SECTION, AND;
- THERE IS NO OTHER DAMAGE IN THE INITIAL WEB SECTION.

[I] ADJUST THE LENGTH OF THE TAPERED SHIM AS NECESSARY. KEEP A MINIMUM 50:1 TAPER RATIO. KEEP A MINIMUM 1.5D EDGE MARGIN FOR FASTENER HOLES.

[J] OVERSIZE THE FASTENER HOLES IN THE STIFFENER AND THE BRACKET UP TO 1/32 INCH MAXIMUM. MAINTAIN A MINIMUM 1.7D EDGE MARGIN FOR FASTENER HOLES. OPTIONAL, REMOVE AND REPLACE THE 65-17583 STIFFENER.

[K] OVERSIZE THE FASTENER HOLES IN THE CLIP UP TO 1/32 INCH MAXIMUM. MAINTAIN A MINIMUM 1.7D EDGE MARGIN FOR FASTENER HOLES. OPTIONAL, REMOVE AND REPLACE THE 68-78140 STIFFENER.

FASTENER SYMBOLS

REFERENCE FASTENER LOCATION

INITIAL FASTENER LOCATION. INSTALL A BACR15FT5D RIVET.
OPTIONAL: INSTALL A BACB30MY6K() HEX DRIVE BOLT WITH A BACC30M6 COLLAR.

REPAIR FASTENER LOCATION. INSTALL A BACR15FT5D RIVET.
OPTIONAL: INSTALL A BACB30MY6K() HEX DRIVE BOLT WITH A BACC30M6 COLLAR. [A]

INITIAL FASTENER LOCATION. INSTALL A BACB30NX6K()X HEX DRIVE BOLT WITH A BACC30X6 COLLAR.

INITIAL FASTENER LOCATION. INSTALL A BACR15FT8D RIVET. OPTIONAL: INSTALL A BACB30MY8K()Y HEX DRIVE BOLT WITH A BACC30R8 COLLAR.

INITIAL FASTENER LOCATION. INSTALL A BACR15FT6D RIVET.
OPTIONAL: INSTALL A BACB30NX6K()Y HEX DRIVE BOLT WITH A BACC30AC6 COLLAR.

INSTALL A BACB30LJ3-(*) BOLT WITH A BACN10JC3CD SELF LOCKING NUT AND A BACW10BN3ANP WASHER UNDER THE NUT. IF THE HOLE IS DAMAGED OVERSIZE THE HOLE TO 0.2036-0.2026 INCH AND INSTALL A BACB30LJ3-(*)X BOLT (1/64 INCH OVERSIZE) WITH A BACN10JC3CD SELF LOCKING NUT AND A BACW10BN31ANP (1/64 INCH OVERSIZE) WASHER UNDER THE NUT.

INITIAL FASTENER LOCATION. INSTALL A BACR15CE6D RIVET. OPTIONAL: INSTALL A BACB30NW6K(*)Y HEX DRIVE BOLT WITH A BACC30R6 COLLAR.

REPAIR MATERIAL			
PART NO.	PART	QTY	MATERIAL
1	WEB	1	7075-T6 CLAD SAME GAUGE OR ONE OR TWO GAUGE THICKER THAN THE INITIAL WEB MATERIAL
2	TAPERED SHIM	2	7075-T6 CLAD THICKNESS AS NECESSARY, 50:1 MINIMUM TAPER RATIO
3	DOUBLER	1	7075-T6 CLAD SAME GAUGE OR ONE OR TWO GAUGE THICKER THAN THE INITIAL WEB MATERIAL
4	SOLID SHIM	2	7075-T6 CLAD THICKNESS AS NECESSARY
5	WEB	1	7075-T6 CLAD SAME GAUGE OR ONE OR TWO GAUGE THICKER THAN THE INITIAL WEB MATERIAL

TABLE I

BS 178 Vertical Beams -
Interim Web Repair at LBL 5.7, RBL 5.7, LBL 17.1 and RBL 17.1
Figure 11 (Sheet 3)

BOEING PROPRIETARY - Copyright © - Unpublished Work - See title page for details.

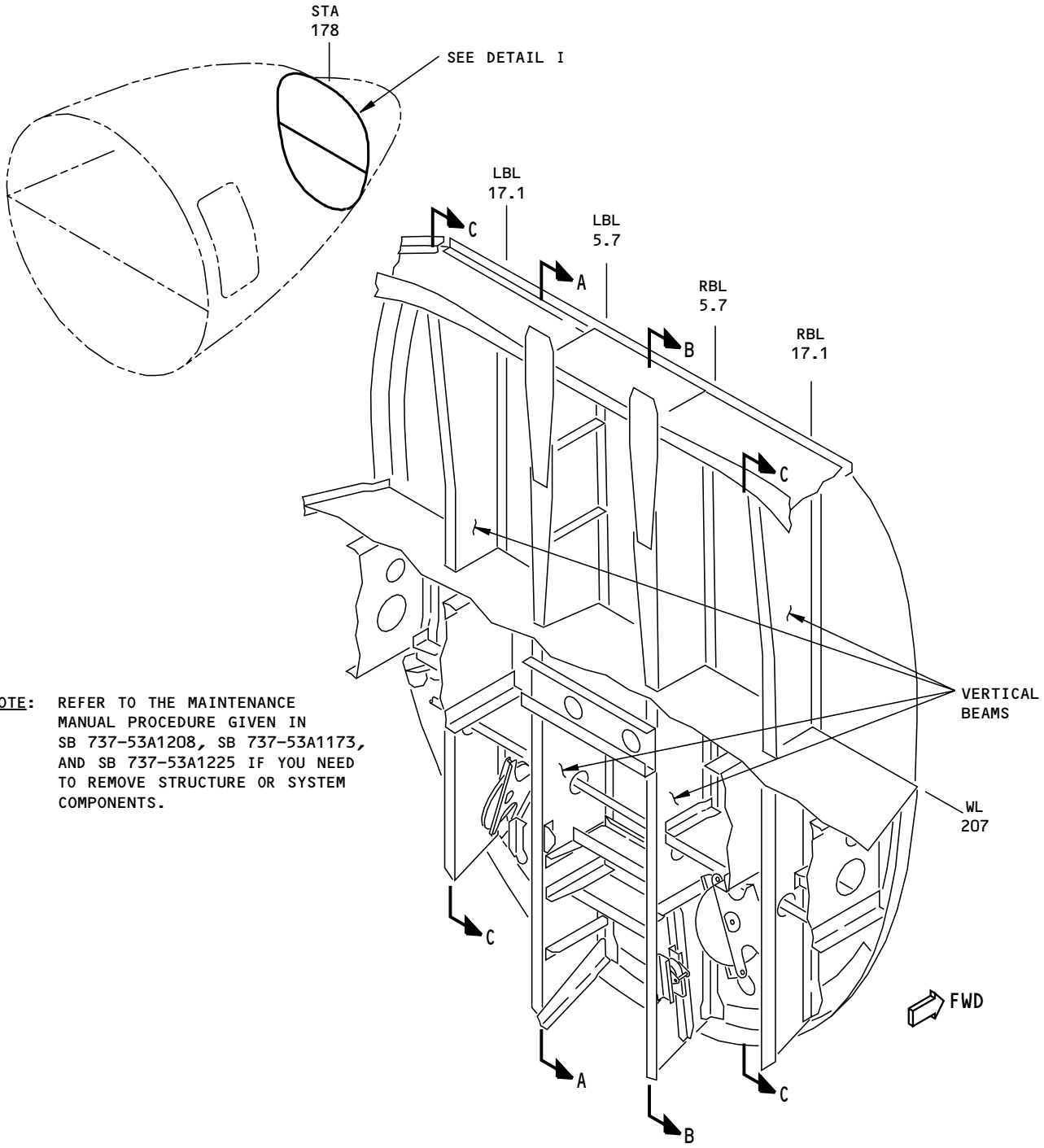

NOTE: REFER TO THE MAINTENANCE MANUAL PROCEDURE GIVEN IN SB 737-53A1208, SB 737-53A1173, AND SB 737-53A1225 IF YOU NEED TO REMOVE STRUCTURE OR SYSTEM COMPONENTS.

BS 178 BULKHEAD - AFT VIEW OF THE WEB AND VERTICAL BEAMS
DETAIL I B

BS 178 Vertical Beams -
Interim Web Repair at LBL 5.7, RBL 5.7, LBL 17.1 and RBL 17.1
Figure 11 (Sheet 4)

M21626

BOEING PROPRIETARY - Copyright © - Unpublished Work - See title page for details.

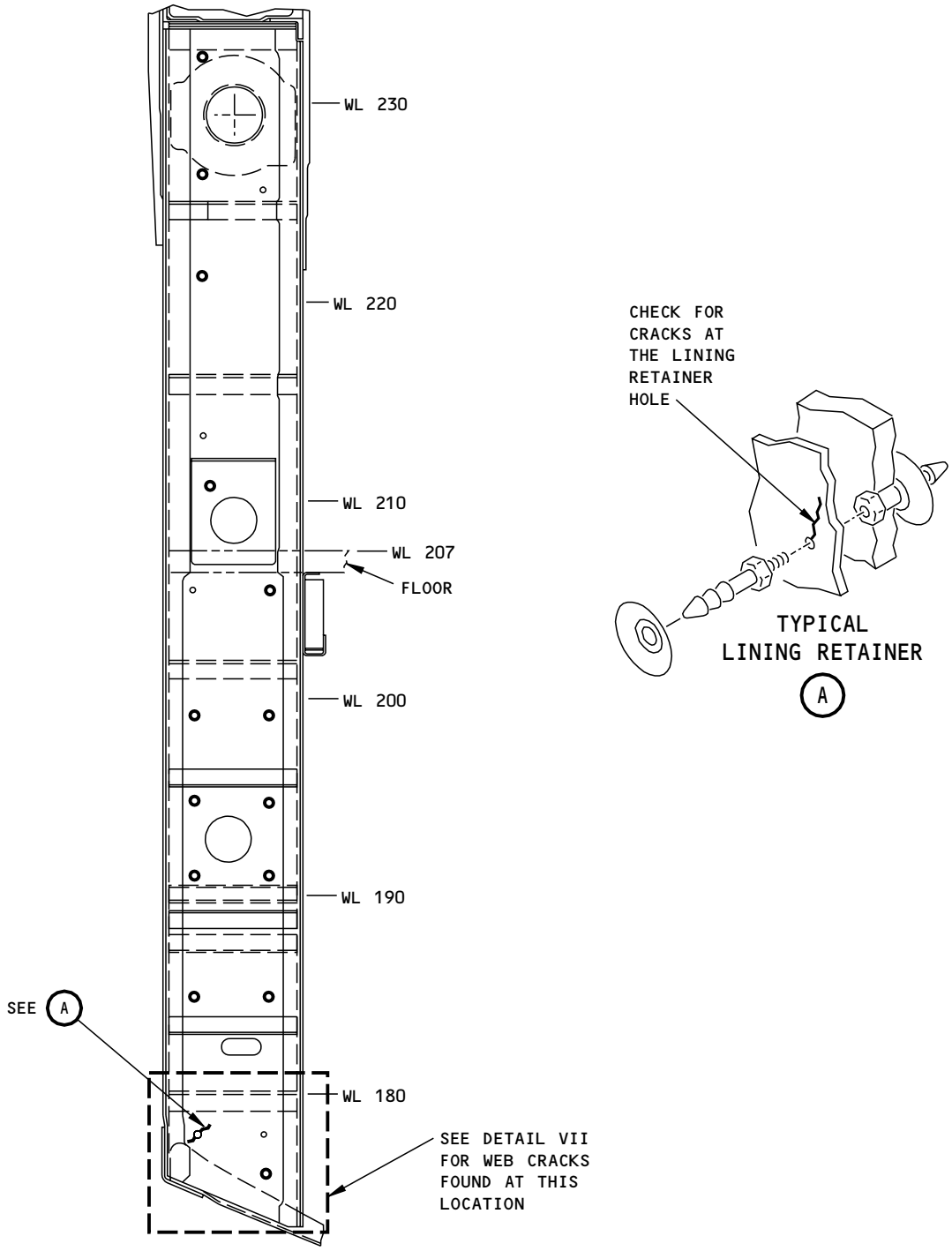

BS 178 Vertical Beams -
Interim Web Repair at LBL 5.7, RBL 5.7, LBL 17.1 and RBL 17.1
Figure 11 (Sheet 5)

BOEING PROPRIETARY - Copyright © - Unpublished Work - See title page for details.

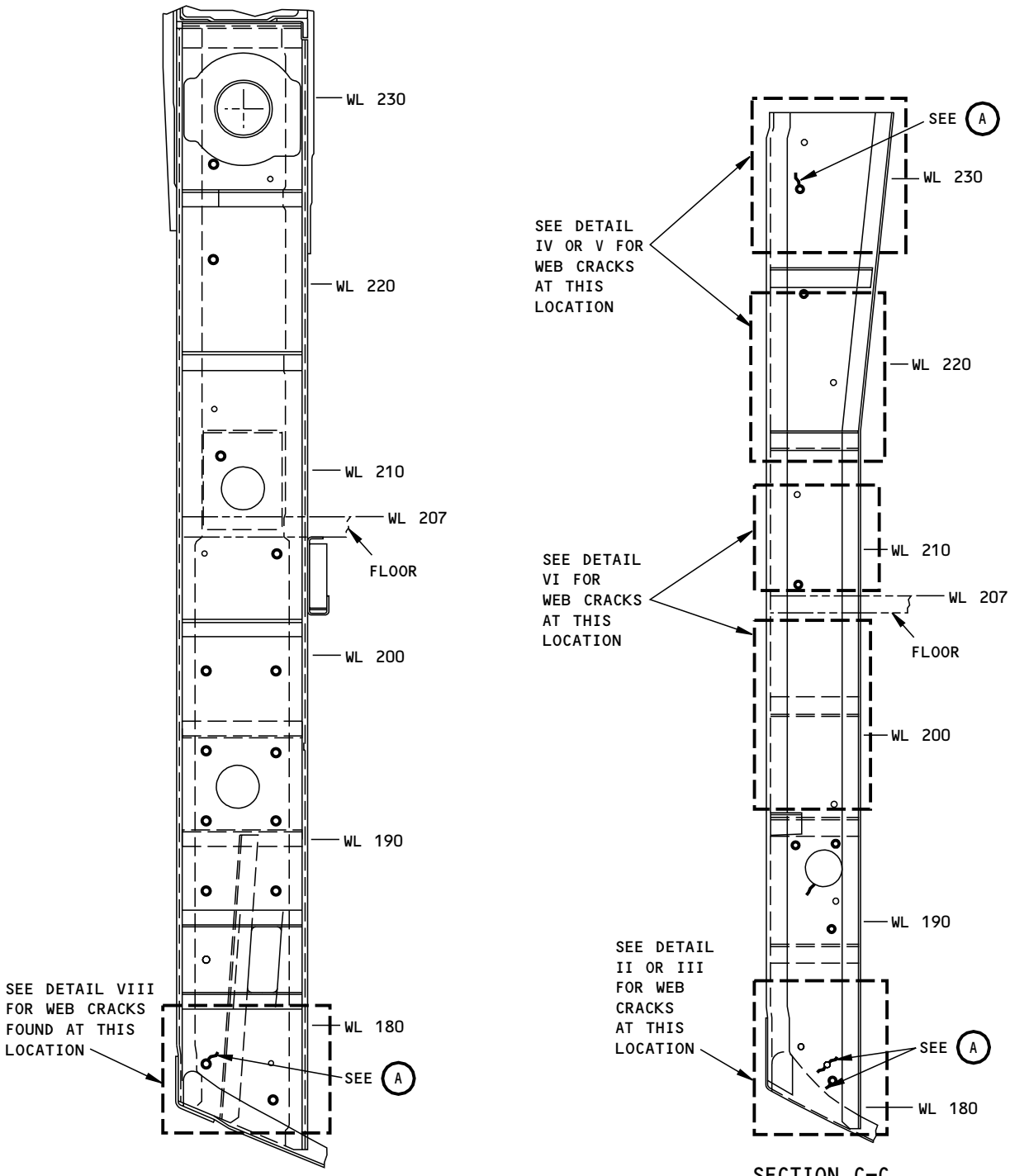

SECTION B-B
RBL 5.7

SECTION C-C
LBL 17.1 SHOWN, D H
RBL 17.1 OPPOSITE

BS 178 Vertical Beams -
Interim Web Repair at LBL 5.7, RBL 5.7, LBL 17.1 and RBL 17.1
Figure 11 (Sheet 6)

M21635

BOEING PROPRIETARY - Copyright © - Unpublished Work - See title page for details.

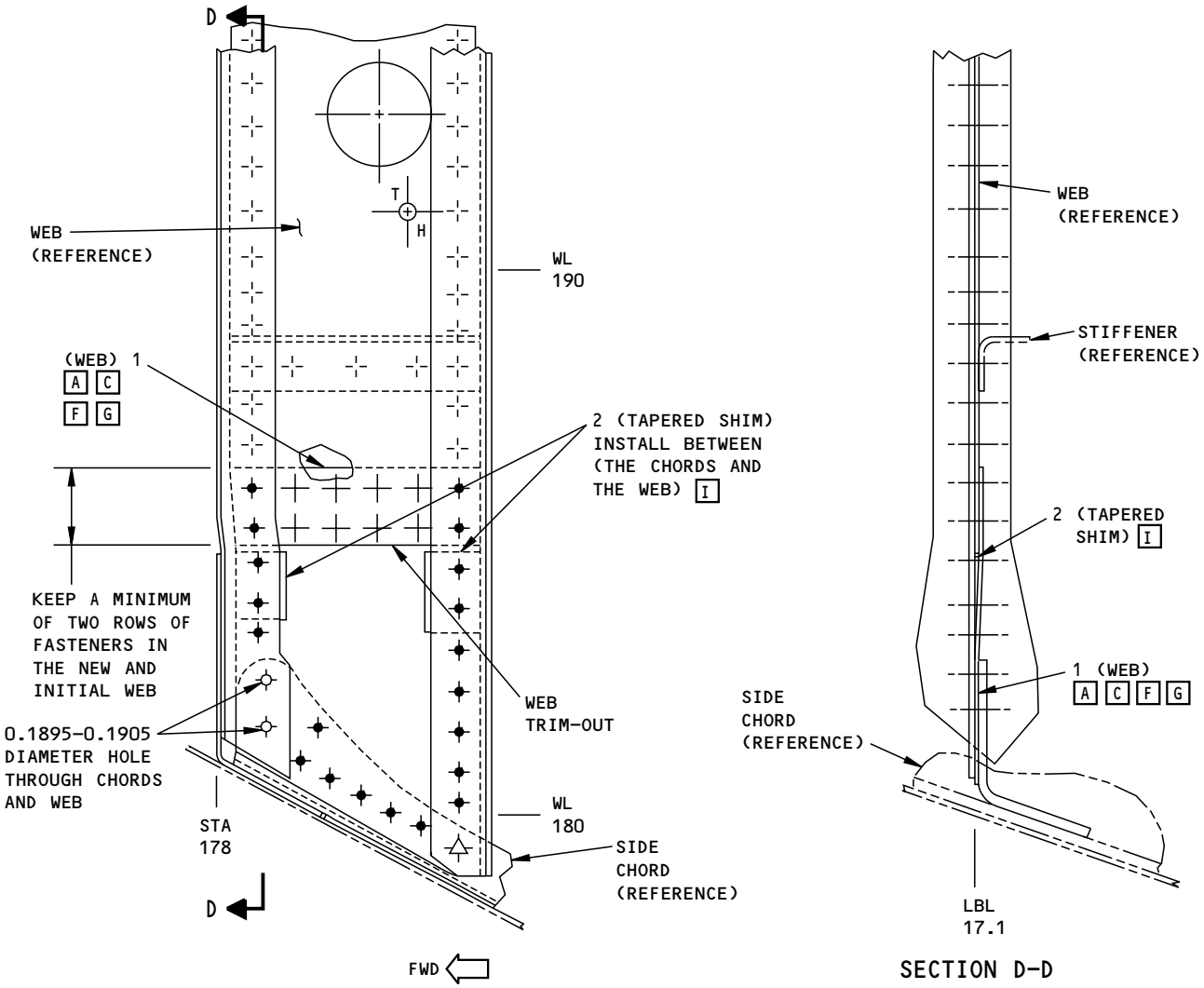

BS 178 LBL 17.1 AND RBL 17.1 VERTICAL BEAMS -
WEB REPAIR FOR CRACKS FOUND ON THE LOWER WEB
DETAIL II B D E

BS 178 Vertical Beams -
Interim Web Repair at LBL 5.7, RBL 5.7, LBL 17.1 and RBL 17.1
Figure 11 (Sheet 7)

M21637

BOEING PROPRIETARY - Copyright © - Unpublished Work - See title page for details.

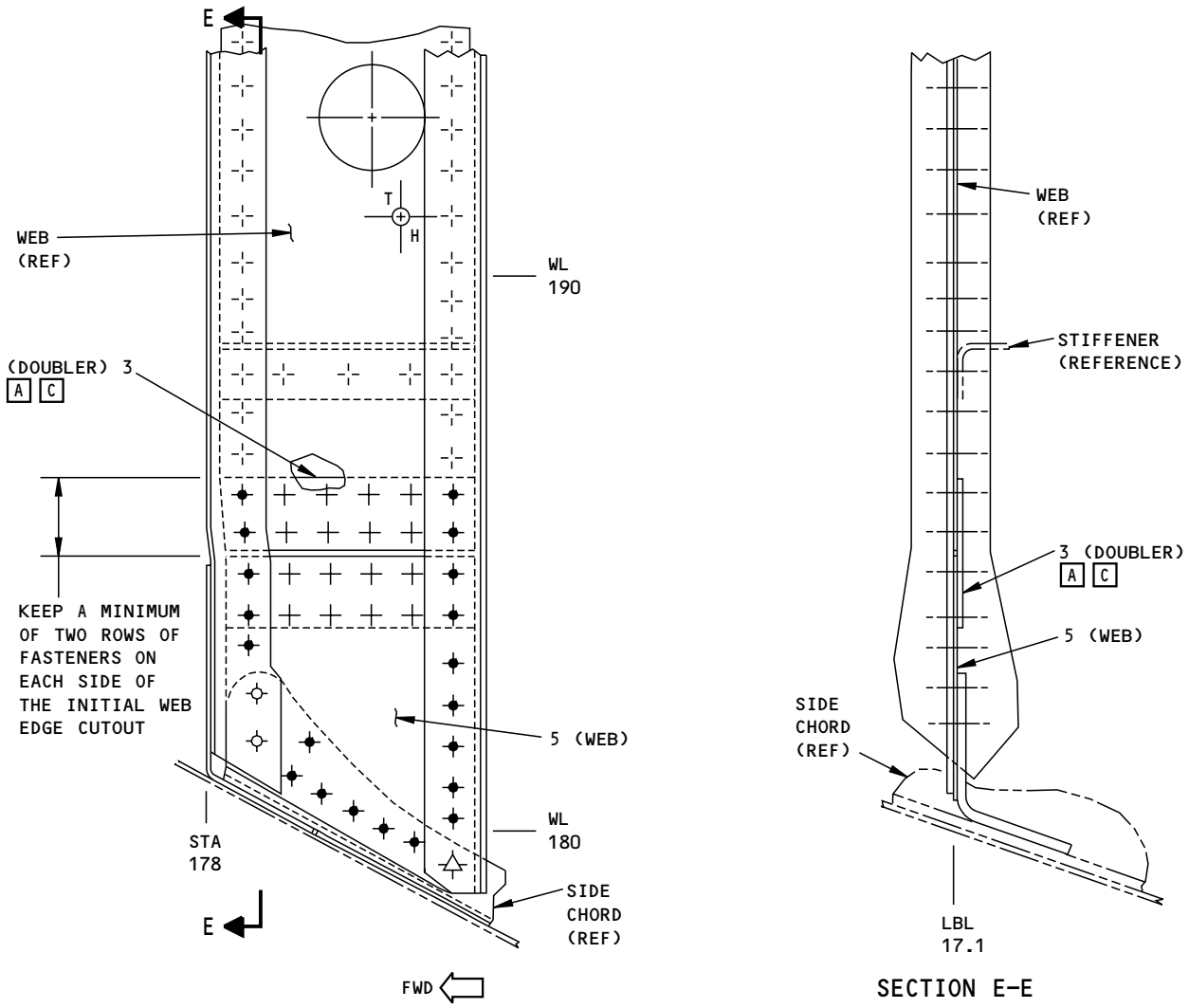

BS 178 LBL 17.1 AND RBL 17.1 VERTICAL BEAM -
WEB REPAIR FOR CRACKS FOUND ON THE LOWER WEB
(NEW WEB AND SPLICING DOUBLER)
DETAIL III B D E

BS 178 Vertical Beams -
Interim Web Repair at LBL 5.7, RBL 5.7, LBL 17.1 and RBL 17.1
Figure 11 (Sheet 8)

M21658

BOEING PROPRIETARY - Copyright © - Unpublished Work - See title page for details.

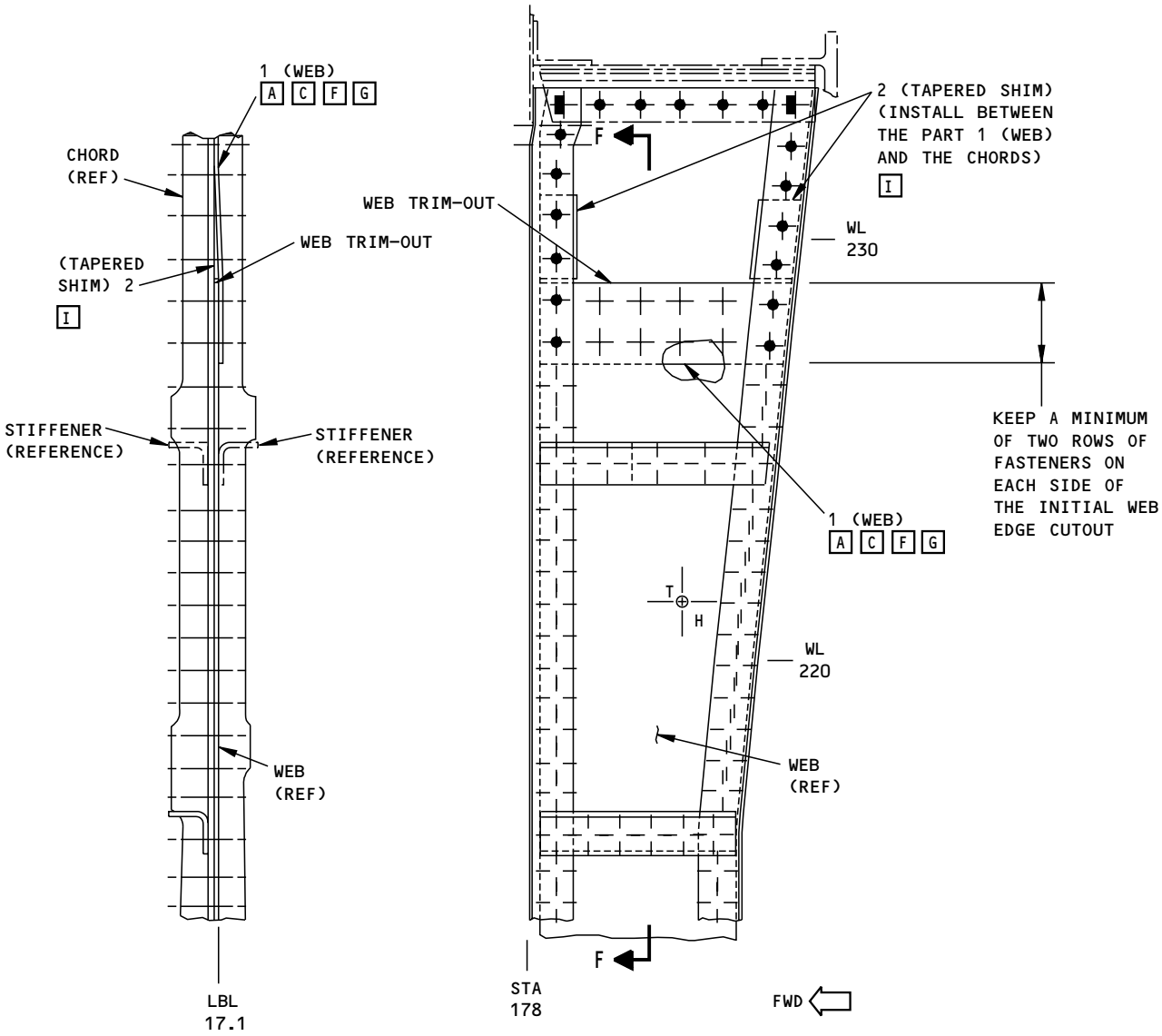

BS 178 LBL 17.1 AND RBL 17.1 VERTICAL BEAM - WEB REPAIR FOR CRACKS AT THE UPPER WEB (WITH THE NEW WEB OVERLAPPED)

DETAIL IV B D E

BS 178 Vertical Beams -
Interim Web Repair at LBL 5.7, RBL 5.7, LBL 17.1 and RBL 17.1
Figure 11 (Sheet 9)

BOEING PROPRIETARY - Copyright © - Unpublished Work - See title page for details.

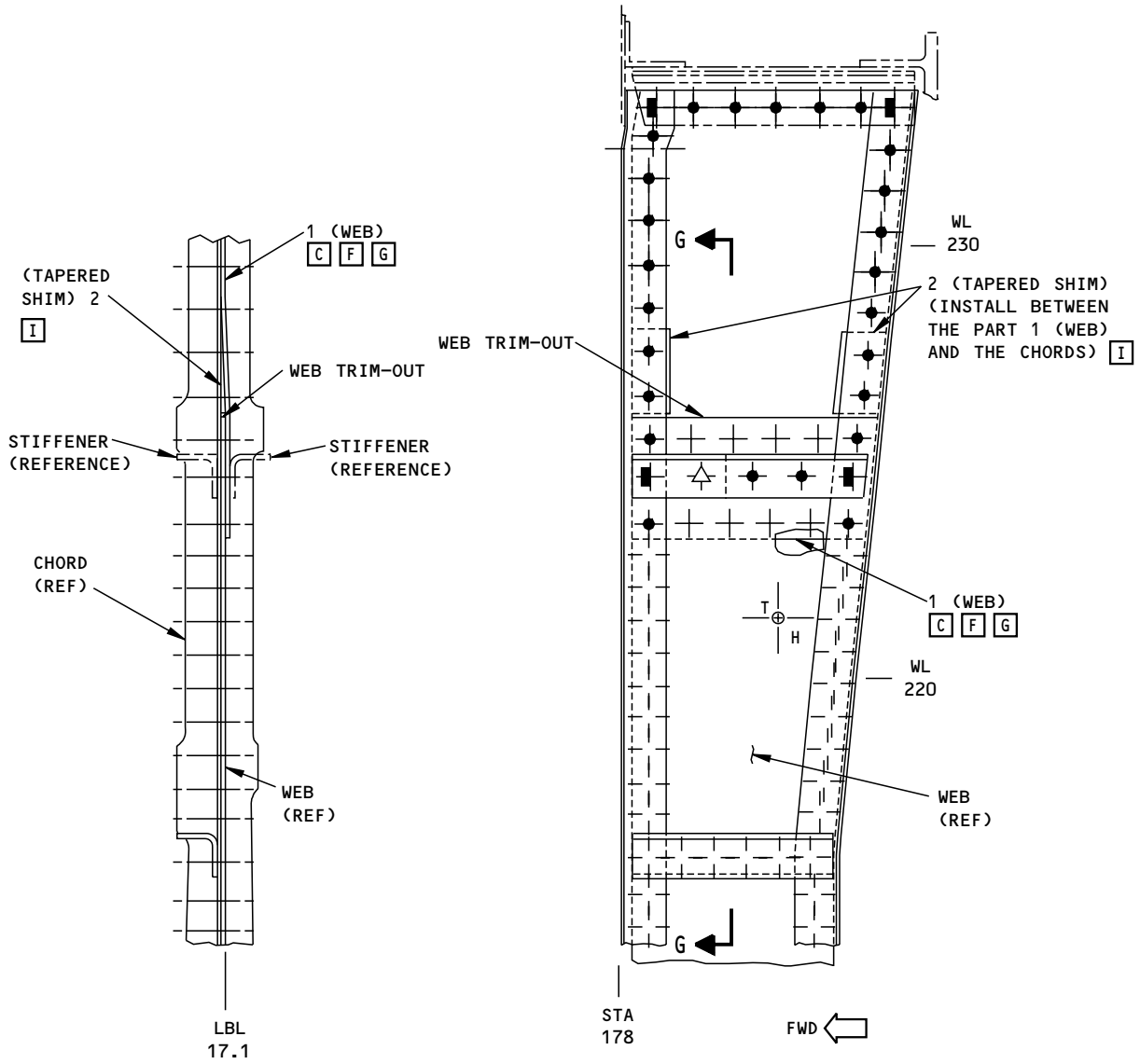

BS 178 LBL 17.1 AND RBL 17.1 VERTICAL BEAM - WEB REPAIR FOR CRACKS AT THE UPPER WEB (WITH THE NEW WEB OVERLAPPED)

DETAIL V B D E

BS 178 Vertical Beams -
Interim Web Repair at LBL 5.7, RBL 5.7, LBL 17.1 and RBL 17.1
Figure 11 (Sheet 10)

M21666

BOEING PROPRIETARY - Copyright © - Unpublished Work - See title page for details.

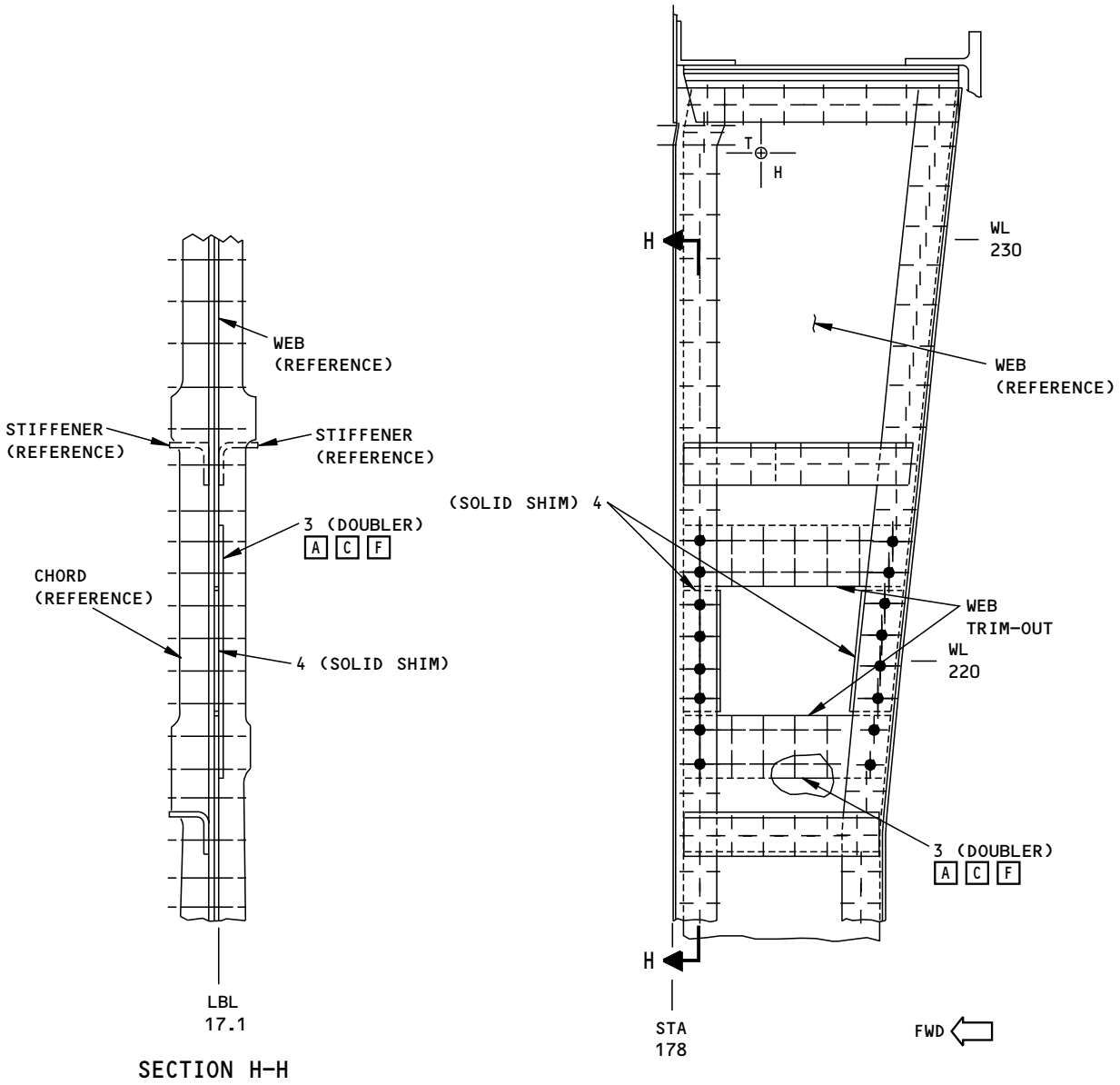

BS 178 LBL 17.1 AND RBL 17.1 VERTICAL BEAM - WEB REPAIR FOR SMALL DAMAGES
(WITH THE DAMAGED WEB REMOVED AND REPAIR DOUBLER INSTALLED)
DETAIL VI B E H

BS 178 Vertical Beams -
Interim Web Repair at LBL 5.7, RBL 5.7, LBL 17.1 and RBL 17.1
Figure 11 (Sheet 11)

BOEING PROPRIETARY - Copyright © - Unpublished Work - See title page for details.

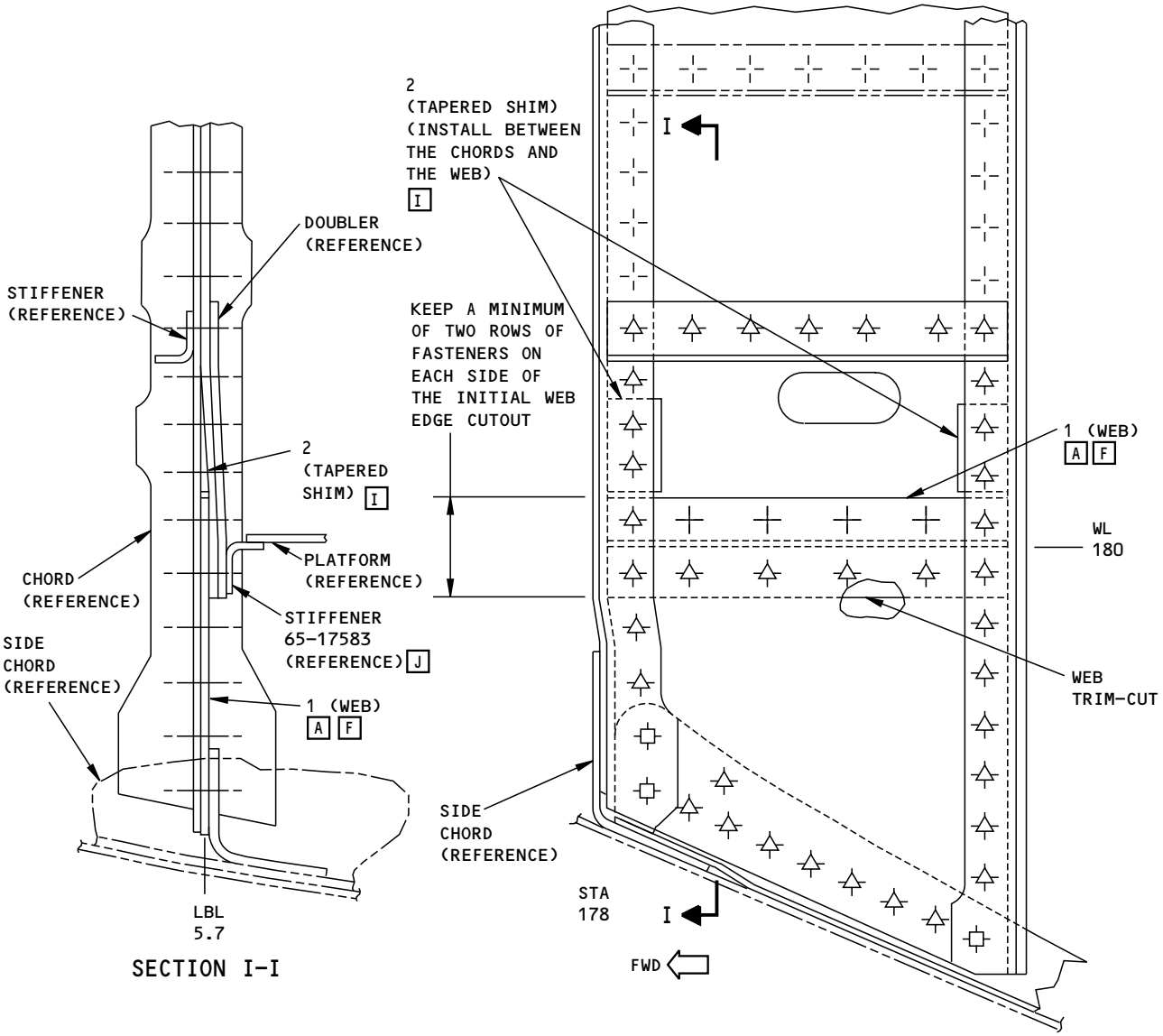

BS 178 LBL 5.7 VERTICAL BEAM - WEB REPAIR FOR CRACKS BELOW WL 180
(WITH THE NEW WEB OVERLAPPED)
DETAIL VII B E

BS 178 Vertical Beams -
Interim Web Repair at LBL 5.7, RBL 5.7, LBL 17.1 and RBL 17.1
Figure 11 (Sheet 12)

M21683

BOEING PROPRIETARY - Copyright © - Unpublished Work - See title page for details.

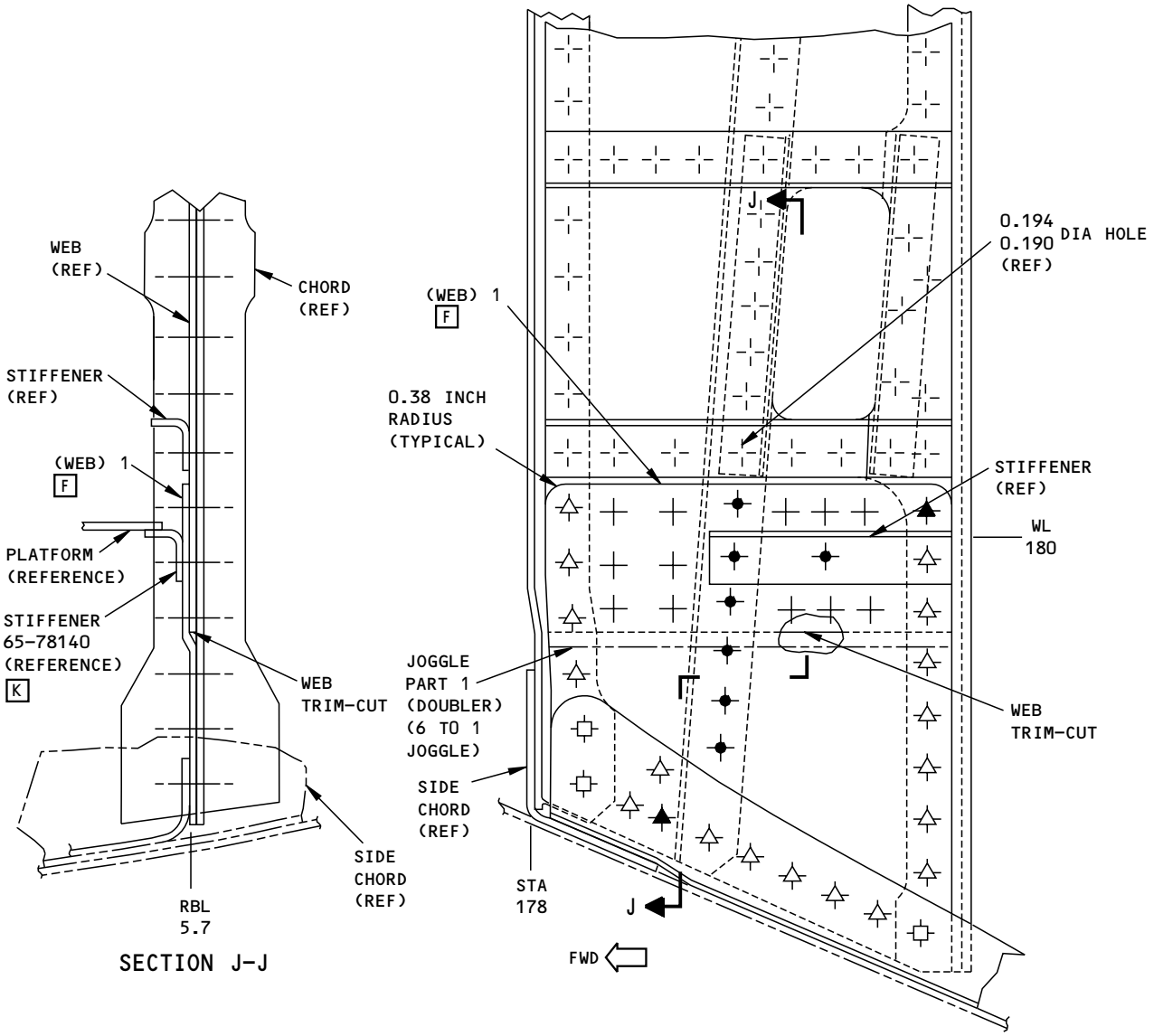

BS 178 RBL 5.7 VERTICAL BEAM - WEB REPAIR FOR CRACKS BELOW WL 180
(REPAIR DOUBLER WITH JOGGLE)
DETAIL VIII B E

BS 178 Vertical Beams -
Interim Web Repair at LBL 5.7, RBL 5.7, LBL 17.1 and RBL 17.1
Figure 11 (Sheet 13)

BOEING PROPRIETARY - Copyright © - Unpublished Work - See title page for details.

APPLICABILITY

THIS REPAIR IS APPLICABLE TO THE SHEAR WEB LOCATED AT L/R BL 30.75, WL 207.5 BETWEEN STA 188 AND STA 196.5.

REPAIR INSTRUCTIONS

1. Remove and keep the following parts to get access to the damaged area: heel rest panel assembly with wear plate and formed angle, support angle, support assembly (65-46384) and angle (left side 65-45833-17; right side 65-45833-18) [B] for later installation in the repair area. If the initial parts had shims use those shims again if possible. See Detail II.
2. Remove the damaged shear web and keep as a template if necessary.
3. Make the repair part. The surface roughness of the repair part and the circular cut must be 125 microinches Ra or better. See Detail IV and Table I.

   NOTE: As an alternative to Detail IV, use the initial shear web as a template.
4. Assemble the repair part and drill the fastener holes. [C] See Detail III and Section A-A.
5. Disassemble the repair part.
6. Remove the nicks, scratches, gouges, burrs and sharp edges from the repair part.
7. Apply cadmium plate finish to the repair part. Refer to SRM 51-10-2.
8. Apply two coats of BMS 10-11, Type I primer to the repair part and the mating surface of the BACN10MK3-65 nutplate to the repair part. Refer to SOPM 20-41-02.
9. Install the BACN10MK3-65 nutplate on the repair part for pitot tube attach point. [C] [D] Install nutplate and nutplate fasteners wet with BMS 5-95 sealant. See Detail III. Refer to SRM 51-20-4.
10. Install the repair part with BMS 5-95 sealant between the mating surfaces. Fill all gaps with BMS 5-95 sealant. Refer to SRM 51-20-4.
11. Install the fasteners. Fasteners that are not made of aluminum must be installed wet with BMS 5-95 sealant. Refer to SRM 51-20-4.
12. Install parts and assemblies which were removed to get access. Do not apply BMS 5-95 sealant on removable parts installed with nutplate. Use the same fasteners.
13. Apply a coat of BMS 3-23, Type II or BMS 3-29 corrosion inhibiting compound to the repair area. Refer to SRM 51-10-2.

NOTES

- THESE REPAIRS WILL NOT HAVE AN EFFECT ON THE STRUCTURALLY SIGNIFICANT ITEMS GIVEN IN SRM 51-00-4, FIGURE 3. THUS, NO CHANGE TO THE SUPPLEMENTAL STRUCTURAL INSPECTION DOCUMENT (SSID) INSPECTION PROGRAM IS NECESSARY.
- D - FASTENER DIAMETER
- KEEP A 2D MINIMUM EDGE MARGIN.
- WHEN YOU USE THIS REPAIR REFER TO:
  - NDT PART 6, 51-00-00, FIG. 4, FOR THE HFEC PROCEDURES
  - SOPM 20-41-02 FOR APPLICATION OF CHEMICAL AND SOLVENT RESISTANT FINISHES
  - SRM 51-10-1 FOR INSPECTION AND REMOVAL OF DAMAGE
  - SRM 51-10-2 FOR PROTECTIVE TREATMENT OF METAL
  - SRM 51-20-1 FOR SHEET METAL AND FLAT PATTERN DATA, RULES OF SHIMMING
  - SRM 51-20-4 FOR REPAIR SEALING
  - SRM 51-30 FOR FASTENER CODE, INSTALLATION AND REMOVAL, SUBSTITUTION, HOLE SIZES, AND EDGE MARGIN.

[A] REMOVE PART TO GET ACCESS TO THE DAMAGED AREA. INSTALL IT AFTER THE REPAIR PART IS INSTALLED.

[B] REMOVE THE BACB30GW8 HEX DRIVE BOLT ⌖, THEN REMOVE ANGLE (LEFT SIDE 65-45833-17; RIGHT SIDE 65-45833-18) FROM THE ADJACENT STRAP AND THE ADJACENT ANGLE, AFTER THE REPAIR PART IS INSTALLED, ASSEMBLE IN THE OPPOSITE ORDER, EXCEPT USE A BACB30FP8A-() HEX DRIVE BOLT WITH A BACC30M8 COLLAR.

[C] USE INITIAL SHEAR WEB AS A TEMPLATE TO FIND INITIAL FASTENER LOCATION.

[D] INSTALL THE BACN10MK3-65 NUTPLATE ON THE REPAIR SHEAR WEB FOR PITOT TUBE ATTACH POINT IF IT IS INSTALLED ON THE INITIAL SHEAR WEB.

Shear Web Crack Repair Between Stations 196.5 and 188
Figure 12 (Sheet 1)

BOEING PROPRIETARY - Copyright © - Unpublished Work - See title page for details.

FASTENER SYMBOLS

- REFERENCE FASTENER LOCATION.
- INITIAL FASTENER LOCATION. INSTALL A MS20615-4MP UNIVERSAL HEAD RIVET.
- INITIAL FASTENER LOCATION. INSTALL A BACR15CE5M FLUSH HEAD RIVET.
- INITIAL FASTENER LOCATION. INSTALL A BACR15CE6D FLUSH HEAD RIVET.
- INITIAL FASTENER LOCATION. INSTALL A MS20615-5MP UNIVERSAL HEAD RIVET.
- INITIAL FASTENER LOCATION. INSTALL A MS20615-6MP UNIVERSAL HEAD RIVET
- INITIAL FASTENER LOCATION. INSTALL A BACB30FP8A-() HEX DRIVE BOLT WITH A BACC30M8 COLLAR
- INITIAL FASTENER LOCATION. INSTALL A NAS603-8P PAN HEAD SCREW (REMOVE AND REINSTALL). [A]
- INITIAL FASTENER LOCATION. INSTALL A BACR15CE5D FLUSH HEAD RIVET.
- INITIAL FASTENER LOCATION. INSTALL A BACR15BB5D UNIVERSAL HEAD RIVET.
- INITIAL FASTENER LOCATION. INSTALL A BACR15BB6D UNIVERSAL HEAD RIVET.

REPAIR MATERIAL			
PART		QTY	MATERIAL
1	SHEAR WEB	1	0.040 CRES 301 1/2 HARD CONDITION

Shear Web Crack Repair Between Stations 196.5 and 188
Figure 12 (Sheet 2)

BOEING PROPRIETARY - Copyright © - Unpublished Work - See title page for details.

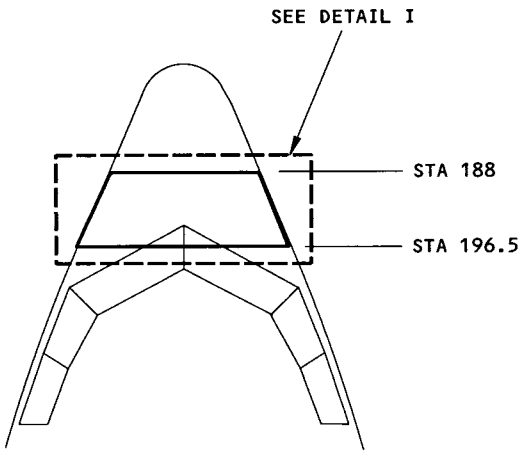

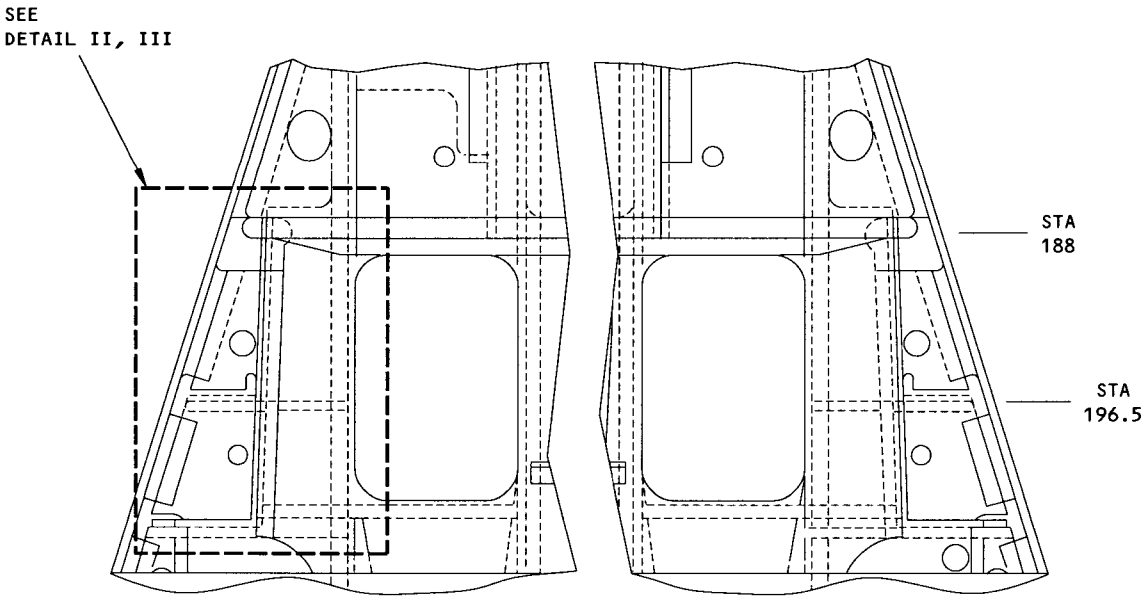

FLOOR STRUCTURE PLAN VIEW, SECTION 41 (PARTIAL)
DETAIL I

Shear Web Crack Repair Between Stations 196.5 and 188
Figure 12 (Sheet 3)

BOEING PROPRIETARY - Copyright © - Unpublished Work - See title page for details.

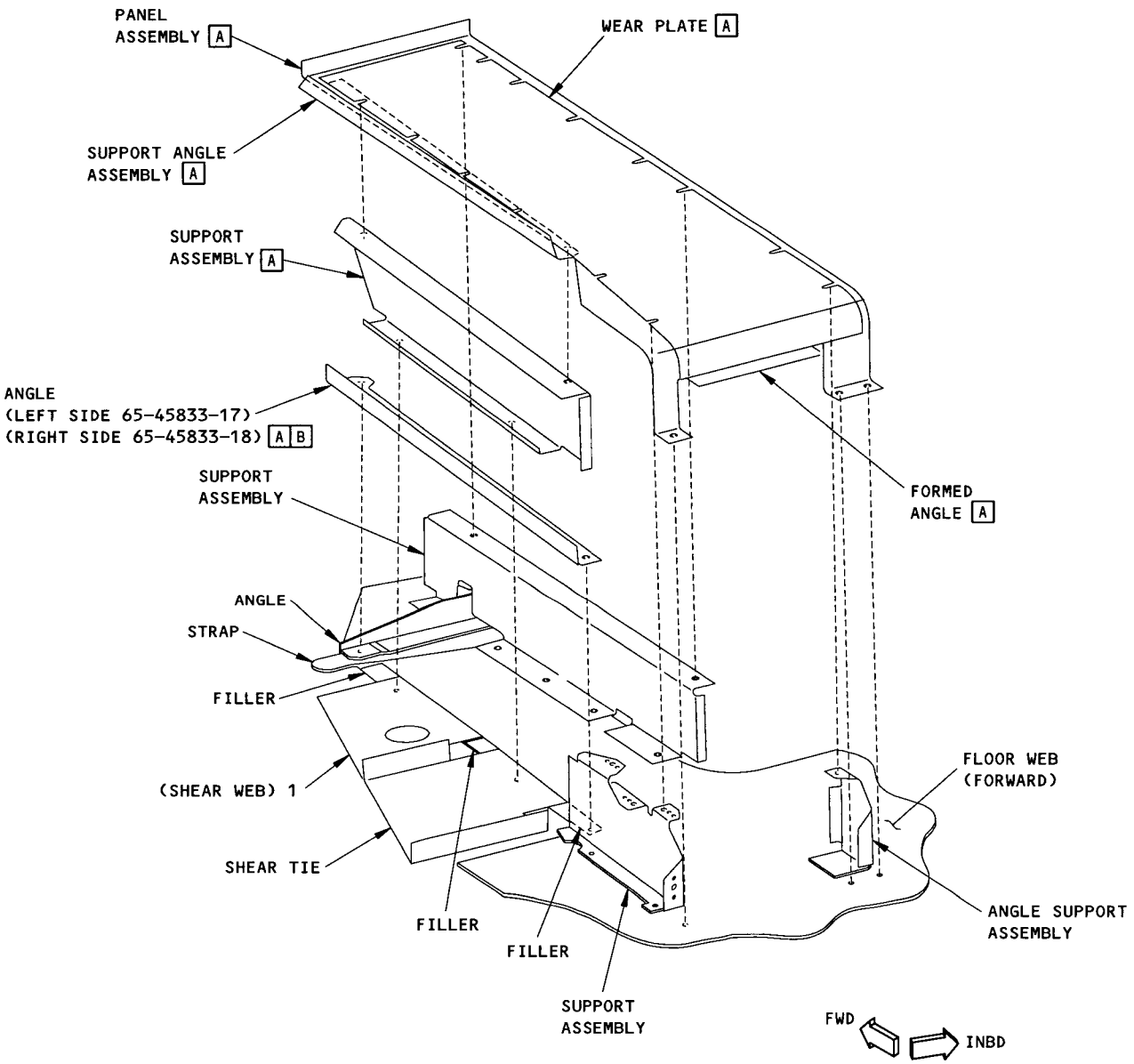

EXPLODED VIEW OF THE REPAIR PART AND ADJACENT PARTS
DETAIL II

Shear Web Crack Repair Between Stations 196.5 and 188
Figure 12 (Sheet 4)

BOEING PROPRIETARY - Copyright © - Unpublished Work - See title page for details.

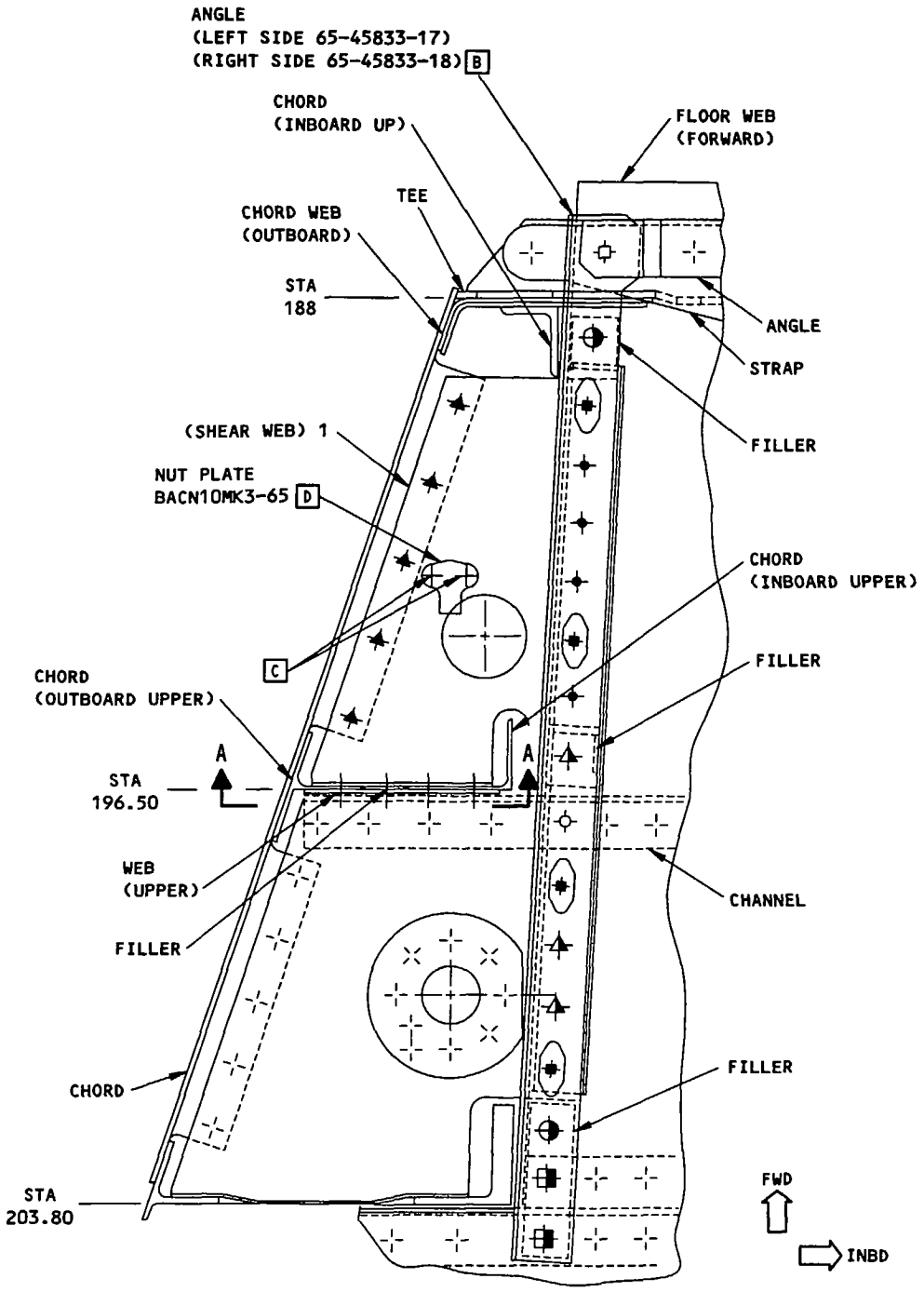

TOP VIEW
REPAIR OF THE CRACKED SHEAR WEB
LEFT SIDE SHOWN, RIGHT SIDE OPPOSITE
DETAIL III

Shear Web Crack Repair Between Stations 196.5 and 188
Figure 12 (Sheet 5)

BOEING PROPRIETARY - Copyright © - Unpublished Work - See title page for details.

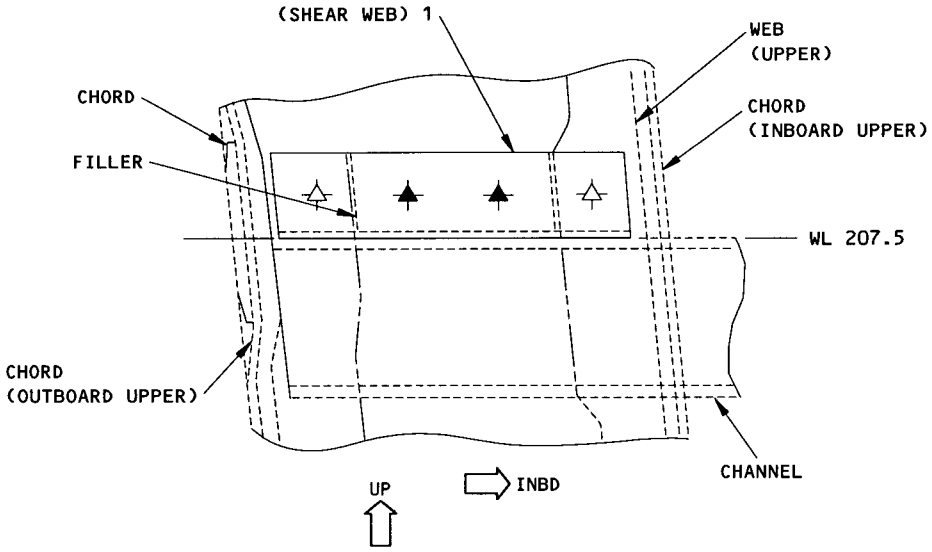

VIEW LOOKING FORWARD
LEFT SIDE SHOWN, RIGHT SIDE OPPOSITE
SECTION A-A

Shear Web Crack Repair Between Stations 196.5 and 188
Figure 12 (Sheet 6)

BOEING PROPRIETARY - Copyright © - Unpublished Work - See title page for details.

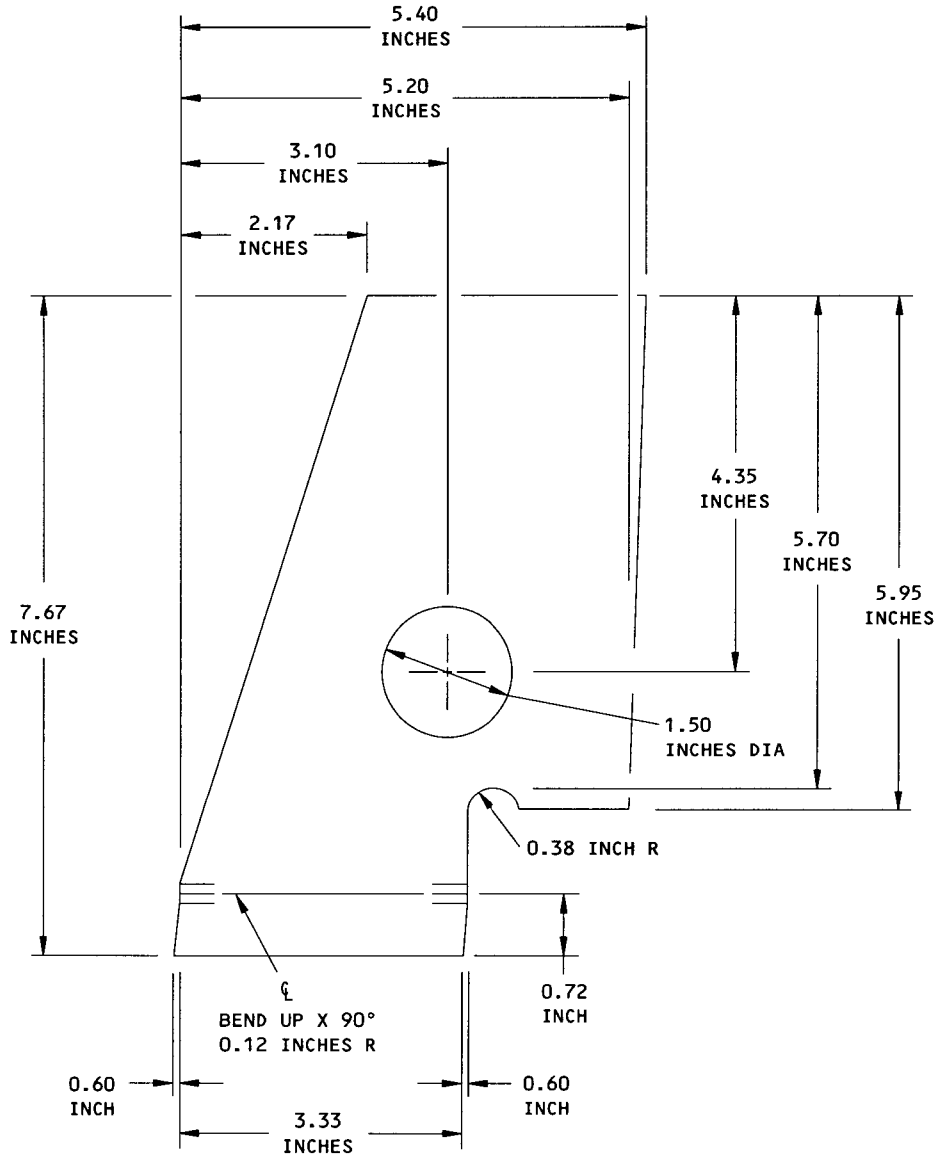

DIMENSIONS OF THE REPAIR PART 1 (SHEAR WEB)
LEFT SIDE SHOWN, RIGHT SIDE OPPOSITE
DETAIL IV

Shear Web Crack Repair Between Stations 196.5 and 188
Figure 12 (Sheet 7)

BOEING PROPRIETARY - Copyright © - Unpublished Work - See title page for details.

APPLICABILITY

THIS REPAIR IS APPLICABLE TO THE CRACKS FOUND IN ANY SINGLE GORE WEB AT THE APEX REGION OF THE STA 1016 PRESSURE BULKHEAD, UP TO A MAXIMUM OF 6 GORE WEB SECTIONS.

THIS REPAIR IS NOT APPLICABLE IF ALL 7 GORE WEB SECTIONS ARE DAMAGED; USE THE ALL GORE WEB REPAIR. REFER TO SRM 53-10-11, FIGURE 14.

REPAIR INSTRUCTIONS

1. Get access to the damaged area.
2. Do a visual inspection of the damaged area. If the damage is within the limits of Detail II, continue with Step 3. If the damage is not within the limits of Detail II, contact The Boeing Company.
3. Remove the fasteners from the damaged area.
4. Carefully insert nylon or hardwood wedges between the dome web and the stiffeners (or other structures if necessary) in the damaged area. Use sufficient wedges that gradually disconnect the parts.

   CAUTION: USE A THIN STEEL SHEET BETWEEN DOME WEB AND THE ZEE STIFFENER TO PREVENT DAMAGE TO THE ADJACENT STRUCTURE.
5. Cut the damaged dome web section at the location shown in Detail III. Remove the damaged dome web section and keep as a template. If the crack damage in the dome web extends beyond the cut line shown in Detail III, contact The Boeing Company with all the details.
6. Make the edges of the cut smooth with a finish of 63 microinches Ra or smoother.
7. Do a High Frequency Eddy Current (HFEC) rotary probe inspection of all fastener holes through the initial structure, common to the repair area. Refer to NDT manual D6-37239 Part 6, 51-00-00, Figure 16. If cracks are found, contact The Boeing Company with all the Details.
8. Make the repair web and doublers as shown in Table I and as shown in Detail III and IV. Make sure that the contour of the repair part matches the initial dome web contour. Make the repair parts from an moundrilled production gore web.
9. Assemble the repair parts and drill the fastener holes. Refer to Detail III.
10. Disassemble the repair parts.
11. Remove the nicks, scratches, gouges, burrs and sharp edges from the repair parts and the bare surfaces of the initial parts.
12. Apply a chemical conversion coating to the repair parts and to the bare surfaces of the initial parts. Refer to SRM 51-10-2.
13. Apply two layers of BMS 10-11, Type I primer to the repair parts and to the bare surfaces of the initial parts. Refer to SOPM 20-41-02.
14. Install the repair parts with BMS 5-95 sealant between the mating surfaces. Fill all gaps with BMS 5-95 sealant. A maximum pull-up gap of 0.010 inch is permitted. Refer to SRM 51-20-4.
15. Install the fasteners as shown in Detail III. Refer to SRM 51-30-02.
16. Apply a fillet seal with BMS 5-95 sealant along the edges of the repair parts and zee stiffener. Refer to SRM 51-20-4.

NOTES

- THIS REPAIR IS CATEGORY B. THE CATEGORY B REPAIR HAS FAA APPROVAL IF YOU DO THE SUPPLEMENTAL INSPECTIONS GIVEN IN TABLE II.
- DO INSPECTIONS AS GIVEN IN THE NDT 53-10-64, PART 6, FIGURES 2 AND 3. DO INSPECTIONS IN THE REPAIR AREA ONLY. SEE DETAIL V.
- THE INSPECTIONS DETAILED IN TABLE II OF THIS REPAIR ARE APPROVED AS AN ALTERNATE METHOD OF COMPLIANCE (AMOC) TO PARAGRAPH (G) OR AIRWORTHINESS DIRECTIVE (AD) 98-11-04 R1, FOR THE INSPECTION OF STRUCTURALLY SIGNIFICANT ITEMS F-30C AND F-30D OF SUPPLEMENTAL STRUCTURAL INSPECTION DOCUMENT (SSID) D6-37089, IN THE AREA AFFECTED BY THIS REPAIR. THIS AMOC ONLY APPLIES TO THE AREAS REPAIRED AS GIVEN IN THIS REPAIR, AND TO THOSE AIRCRAFT IDENTIFIED IN THIS REPAIR. ALL PROVISIONS OF AD 98-11-04 R1 THAT ARE NOT SPECIFICALLY REFERENCED IN THE ABOVE STATEMENTS REMAIN FULLY APPLICABLE AND MUST BE COMPLIED WITH.
- D = FASTENER DIAMETER
- USE A MINIMUM OF 2D EDGE MARGIN.
- USE 4D-6D SPACING BETWEEN REPAIR FASTENERS.
- KEEP A MINIMUM OF 0.38 INCH EXTERNAL RADIUS AND 0.5 INCH INTERNAL RADIUS ON REPAIR PART CORNERS.

Body Station 1016 Pressure Bulkhead Web Repair - Single Gore Web
Figure 13 (Sheet 1)

BOEING PROPRIETARY - Copyright © - Unpublished Work - See title page for details.

NOTES (CONT.)

- IF CRACK DAMAGE IS FOUND IN MORE THAN 1 GORE WEB SECTION, THEN DO THE REPAIR AS FOLLOWS:
  - THE FIRST AND LAST DOUBLERS (AT EACH END OF THE REPAIR) MUST BE THE SAME AS THE PART 1 AND PART 2 DOUBLERS SHOWN IN DETAIL III OF THIS REPAIR.
  - THE INTERMEDIATE DOUBLERS MUST BE THE SAME AS THE PART 1 DOUBLER SHOWN IN THE ALL GORE WEB REPAIR. REFER TO SRM 53-10-11, FIGURE 14, DETAIL III.
- WHEN YOU USE THIS REPAIR, REFER TO:
  - NDT MANUAL D6-37239, PART 6, 53-10-64 FOR EDDY CURRENT INSPECTION PROCEDURES IN THE APEX REGION OF THE STA 1016 PRESSURE BULKHEAD.
  - NDT MANUAL D6-37239, PART 6, 51-00-00, FIGURE 16, FOR HIGH FREQUENCY EDDY CURRENT ROTARY PROBE INSPECTION PROCEDURE
  - SOPM 20-41-02 FOR APPLICATION OF FINISHES
  - SRM 51-10-2 FOR PROTECTIVE TREATMENT OF METALLIC AND NONMETALLIC MATERIALS
  - SRM 51-20-4 FOR REPAIR SEALING
  - SRM 51-30 FOR FASTENER CODE, INSTALLATION AND REMOVAL, HOLE SIZES AND EDGE MARGINS.

[A] MAKE FROM AN UNDRILLED PRODUCTION WEB GORE THAT IS THE SAME AS THE CRACKED WEB. MAKE THE REPAIR PARTS FROM BOEING PART NUMBERS 65-46568-41, -43, -96, -187, -197, -515, -518, -524, -548, -567, -571, -574, OR 65C37292-8 AS APPLICABLE.

[B] THE DAMAGED DOME WEB CAN BE USED AS A TEMPLATE TO MAKE THE PART 3 WEB.

FASTENER SYMBOLS

REFERENCE FASTENER LOCATION

REPAIR FASTENER LOCATION. INSTALL A BACR15BB5D() RIVET.

INITIAL FASTENER LOCATION. INSTALL A BACR15BB6D() RIVET.

REPAIR MATERIAL			
PART NO.	PART	QTY	MATERIAL
1	DOUBLER	1	[A]
2	DOUBLER	1	[A]
3	WEB	1	[A] [B]

TABLE I

Body Station 1016 Pressure Bulkhead Web Repair - Single Gore Web
Figure 13 (Sheet 2)

BOEING PROPRIETARY - Copyright © - Unpublished Work - See title page for details.

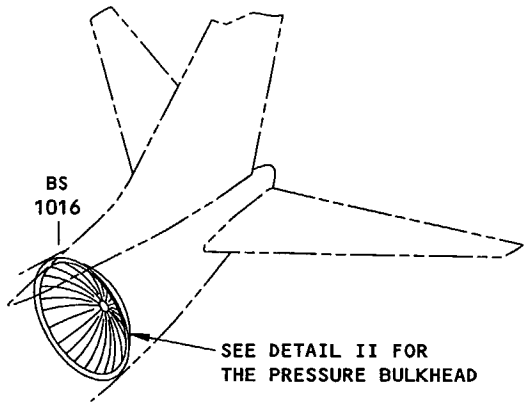

BODY STATION 1016 BULKHEAD LOCATION
DETAIL I

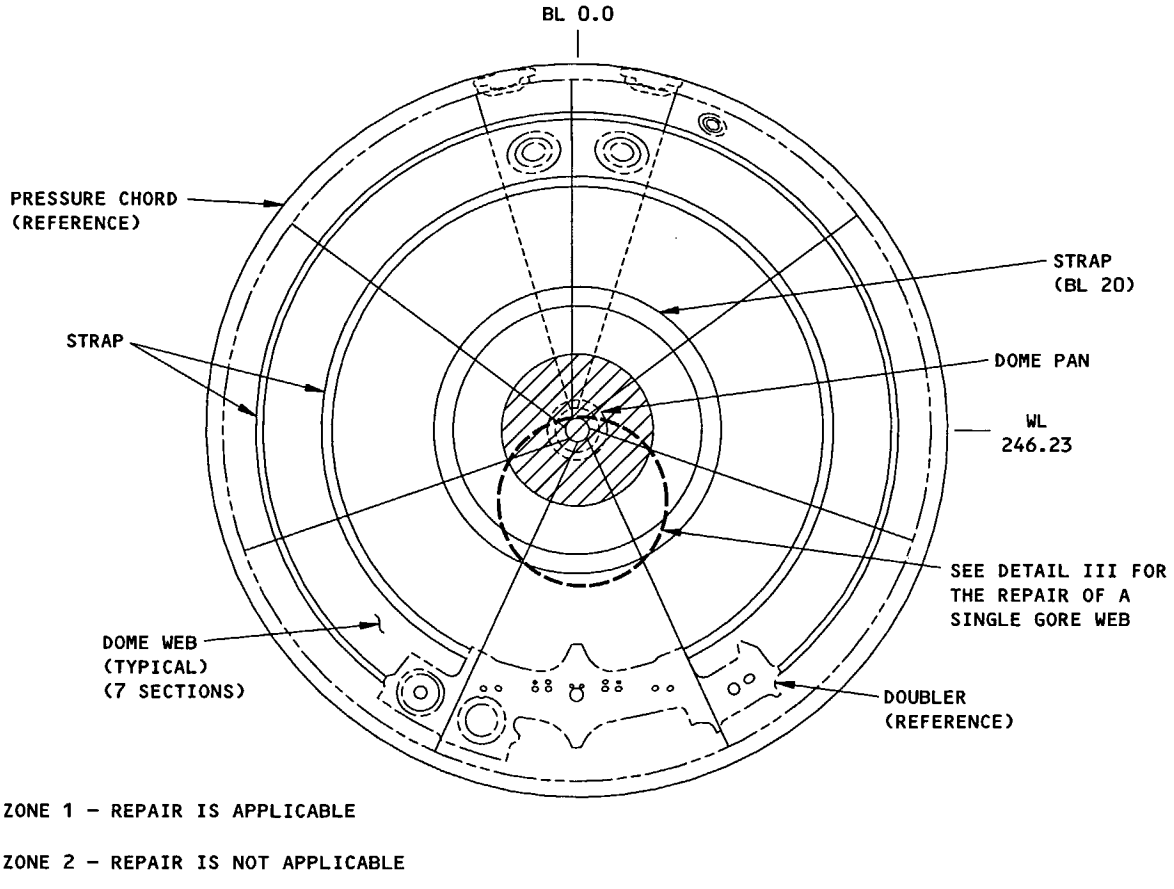

VIEW WHEN YOU LOOK FORWARD

BODY STATION 1016 PRESSURE BULKHEAD
DETAIL II

Body Station 1016 Pressure Bulkhead Web Repair - Single Gore Web
Figure 13 (Sheet 3)

BOEING PROPRIETARY - Copyright © - Unpublished Work - See title page for details.

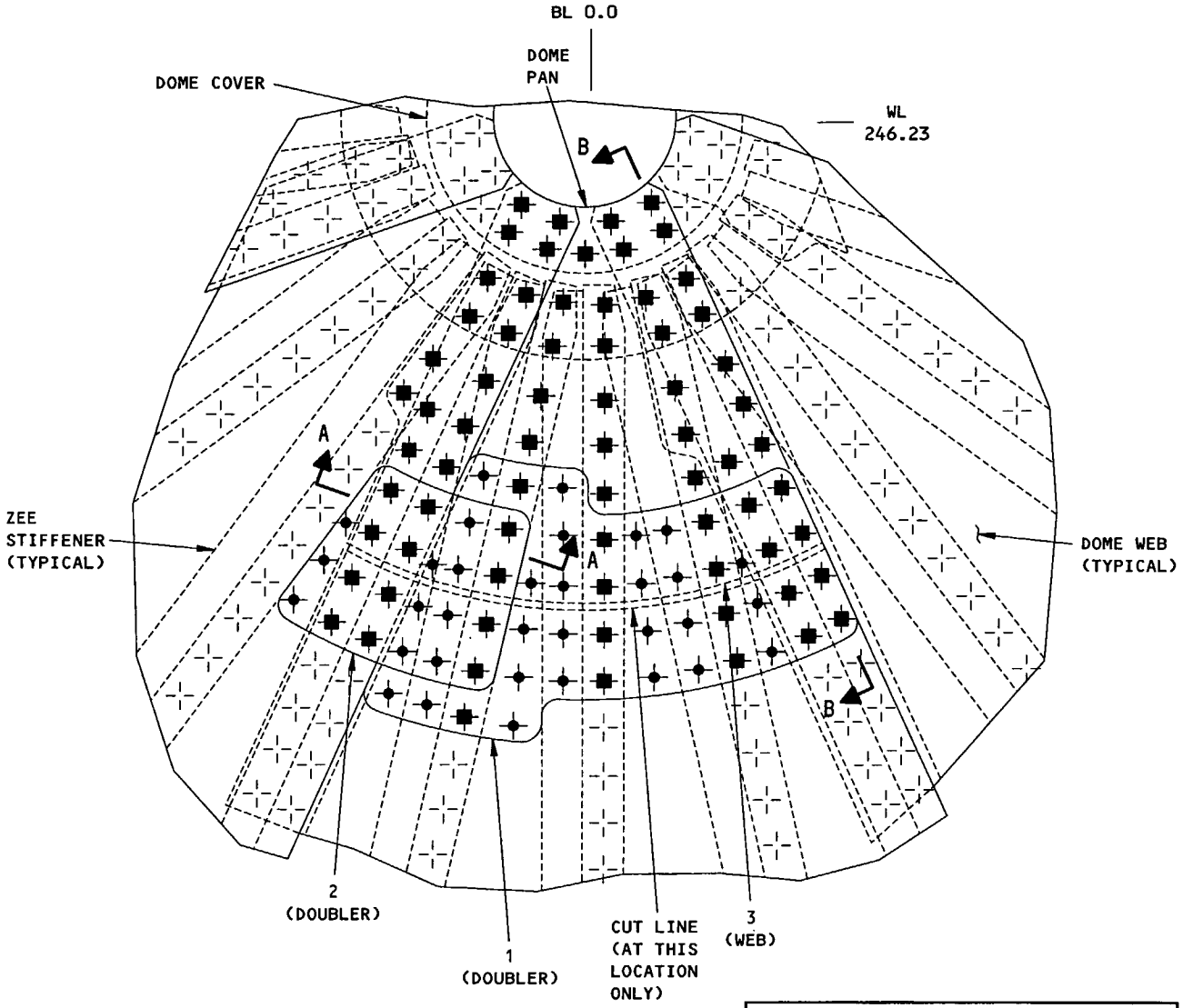

SUBSEQUENT INSPECTIONS ARE NECESSARY FOR CATEGORY B REPAIRS. SEE TABLE II FOR INSPECTION REQUIREMENTS.

VIEW WHEN YOU LOOK FORWARD

REPAIR FOR A SINGLE GORE WEB
DETAIL III

Body Station 1016 Pressure Bulkhead Web Repair - Single Gore Web
Figure 13 (Sheet 4)

BOEING PROPRIETARY - Copyright © - Unpublished Work - See title page for details.

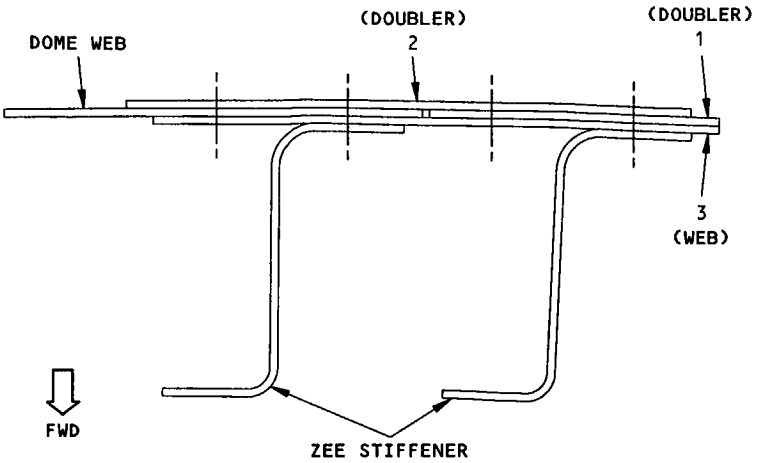

SECTION A-A

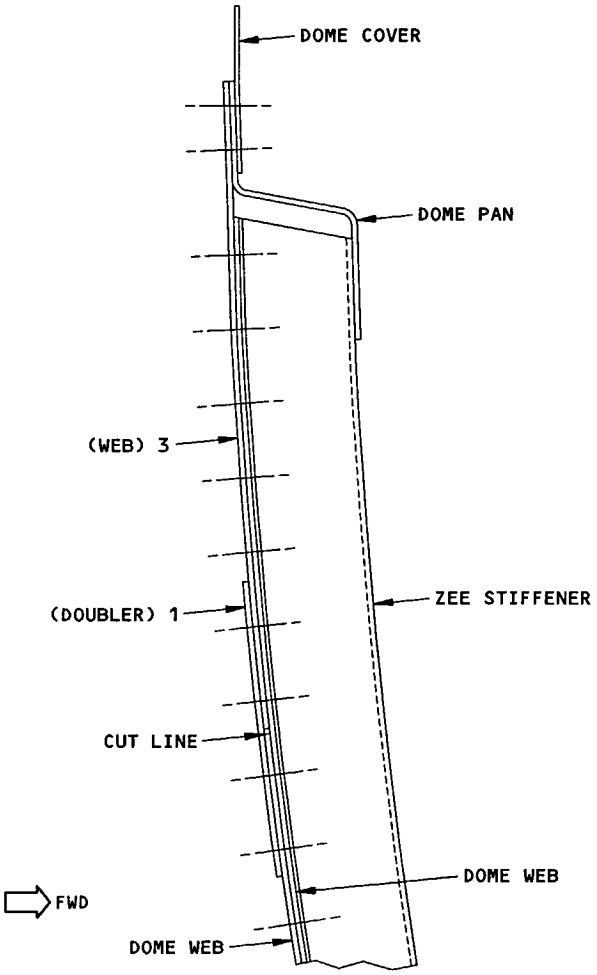

SECTION B-B

Body Station 1016 Pressure Bulkhead Web Repair - Single Gore Web
Figure 13 (Sheet 5)

BOEING PROPRIETARY - Copyright © - Unpublished Work - See title page for details.

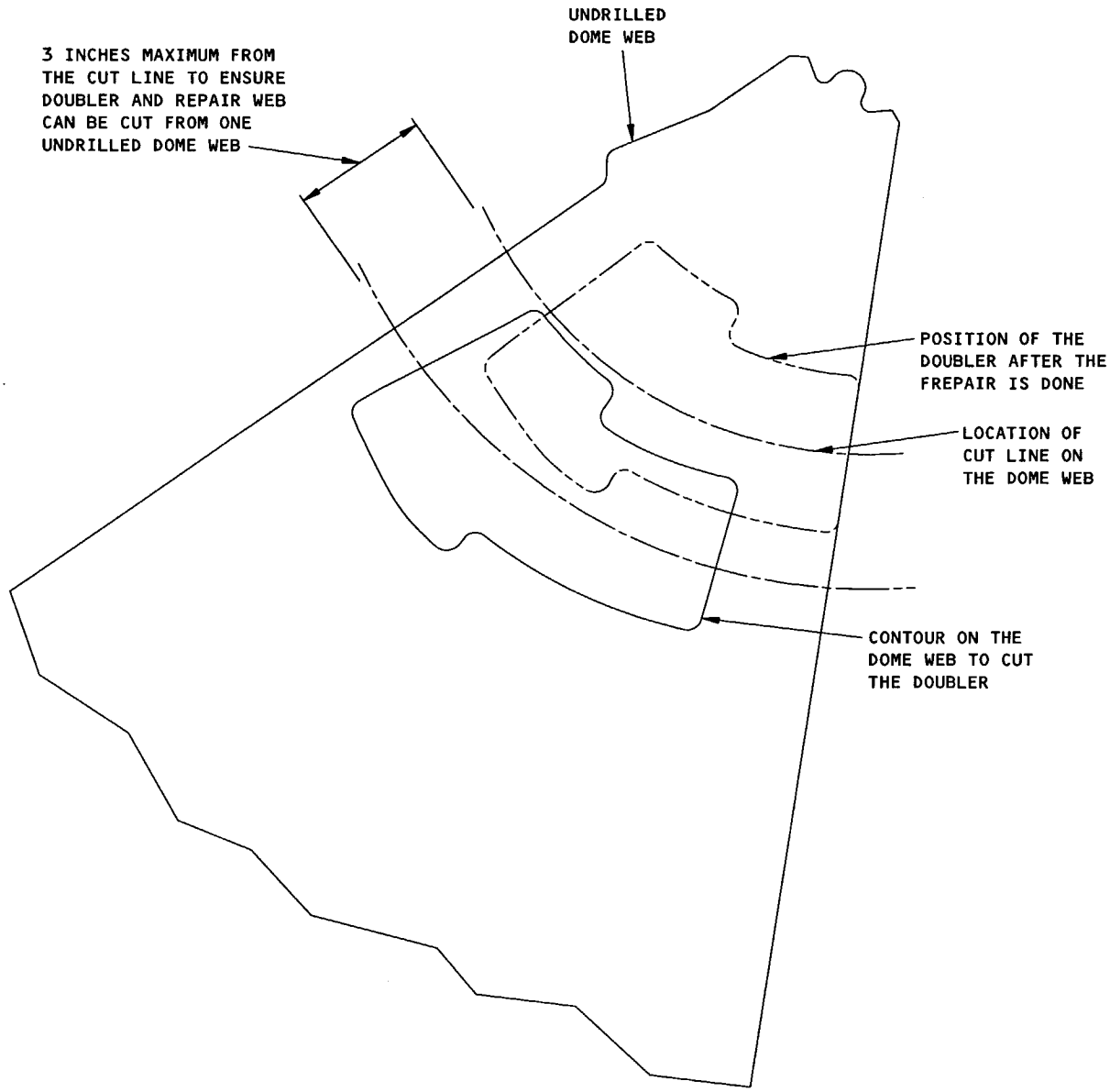

VIEW WHEN YOU LOOK FORWARD

DOUBLER PROFILE
DETAIL IV

Body Station 1016 Pressure Bulkhead Web Repair - Single Gore Web
Figure 13 (Sheet 6)

BOEING PROPRIETARY - Copyright © - Unpublished Work - See title page for details.

CATEGORY B REPAIR INSPECTION REQUIREMENTS			
INSPECTION THRESHOLD	REPEAT INSPECTION INTERVALS		
	METHOD	INTERVAL	REFERENCE
30,000 FLIGHT CYCLES FROM THE TIME THE REPAIR IS DONE IF THE AIRPLANE HAS MORE THAN 60,000 FLIGHT CYCLES, THEN START THE REPEAT INSPECTIONS WITHIN 6,000 FLIGHT CYCLES FROM THE TIME THE REPAIR WAS DONE.	HIGH FREQUENCY EDDY CURRENT (HFEC) LOW FREQUENCY EDDY CURRENT (LFEC)	6,000 FLIGHT CYCLES	737 NDT MANUAL D6-37239, PART 6, 53-10-64, FIGURES 2 AND 3
NOTE: INSPECT THE DOME WEB IN THE REPAIR AREA AS SHOWN IN DETAIL V. INSPECT THE REPAIR WEB AND THE REPAIR DOUBLERS ONLY. NO INSPECTIONS ARE NECESSARY FOR THE UNDAMAGED DOME WEBS.			

TABLE II

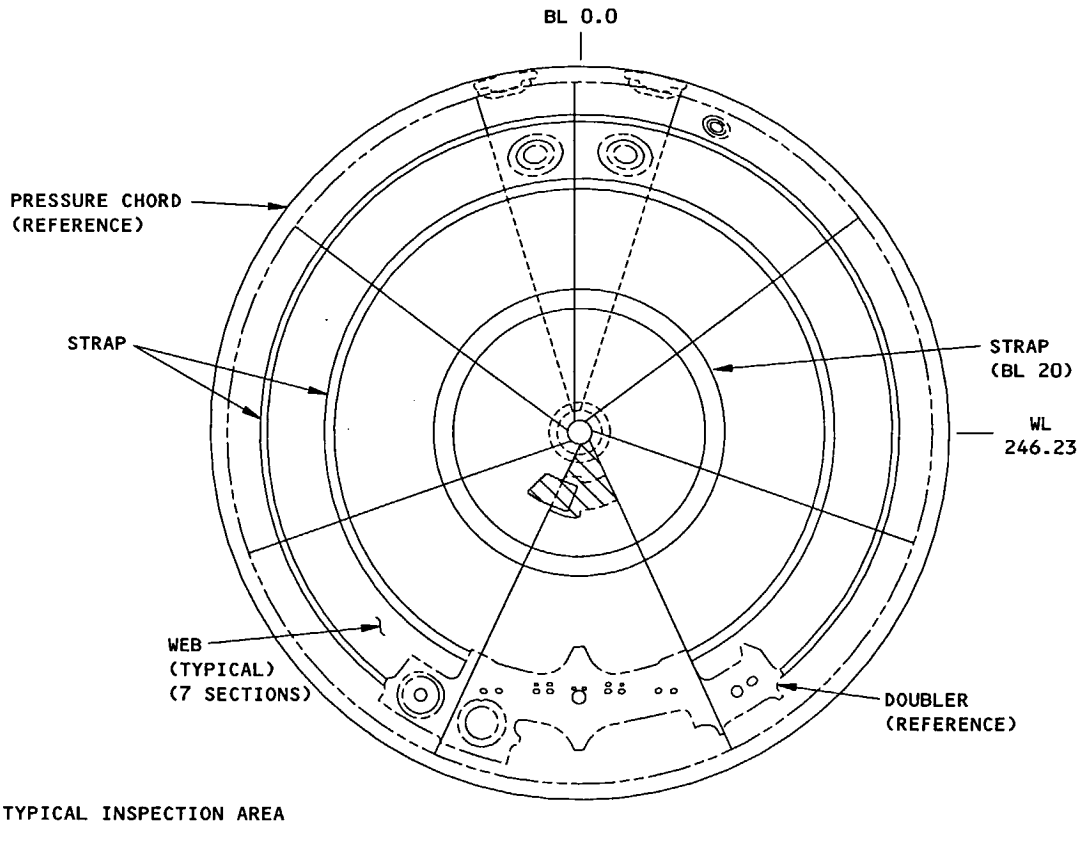

VIEW WHEN YOU LOOK FORWARD

TYPICAL INSPECTION AREA
DETAIL V

Body Station 1016 Pressure Bulkhead Web Repair - Single Gore Web
Figure 13 (Sheet 7)

BOEING PROPRIETARY - Copyright © - Unpublished Work - See title page for details.

APPLICABILITY

THIS REPAIR IS APPLICABLE TO THE CRACKS FOUND IN THE DOME WEBS AT THE APEX REGION OF THE STA 1016 PRESSURE BULKHEAD.

REPAIR INSTRUCTIONS

1. Get access to the damaged area.
2. Do a visual inspection of the damaged area. If the damage is within the limits of Detail II, continue with Step 3. If the damage is not within the limits of Detail II, contact The Boeing Company.
3. Remove the fasteners from the damaged area.
4. Remove and keep the dome cover and pan.
5. Carefully insert nylon or hardwood wedges between the dome webs and the stiffeners (or other structures if necessary) in the damaged area. Use sufficient wedges that gradually disconnect the parts.

   CAUTION: USE A THIN STEEL SHEET BETWEEN DOME WEB AND THE ZEE STIFFENER TO PREVENT DAMAGE TO THE ADJACENT STRUCTURE.
6. Cut the damaged dome web section at the location shown in Detail III. Remove the damaged dome web section and keep as a template. If the crack damage in any of the dome webs extends beyond the cut line shown in Detail III, contact The Boeing Company with all the details.
7. Do a High Frequency Eddy Current (HFEC) rotary probe inspection of all fastener holes through the initial structure, common to the repair area. Refer to NDT manual D6-37239 Part 6, 51-00-00, Figure 16. If cracks are found then contact The Boeing Company with all the details.
8. Make the repair webs and doublers as shown in Table I and Detail III:
   - Make sure that the contour of the repair part matches the initial dome web contours.
   - Make the repair parts from an undrilled production gore web.
   - See Detail IV for the typical doubler profile.
9. Assemble the repair webs, using removable fasteners at the locations shown in Detail V. Do not assemble the repair doublers. [F]
   - Only Drill the fastener holes that attach the repair webs to the existing zee stiffeners. [C]
   - Back-drill the repair webs from the zee stiffeners as necessary.
10. With the repair webs temporarily installed, assemble the repair doublers using removable fasteners at the locations shown in Detail VI: [F]
    - Drill the fastener holes common to the repair doublers. See Details V and VI.
    - Back-drill the repair doublers from the zee stiffeners as necessary.
11. Disassemble the repair parts.
12. Remove the nicks, scratches, gouges, burrs and sharp edges from the repair parts and the bare surfaces of the initial parts.
13. Make the edges of the cut smooth with a finish of 63 microinches Ra or smoother.
14. Apply a chemical conversion coating to the repair parts and to the bare surfaces of the initial parts. Refer to SRM 51-10-2.
15. Apply two layers of BMS 10-11, Type I primer to the repair parts and to the bare surfaces of the initial parts. Refer to SOPM 20-41-02.
16. Install the repair parts with BMS 5-95 sealant between the mating surfaces. Fill all gaps with BMS 5-95 sealant. A maximum pull-up gap of 0.010 inch is permitted. Refer to SRM 51-20-4.
17. Install the fasteners as shown in Detail III. Refer to SRM 51-30.
18. Apply a fillet seal with BMS 5-95 sealant along the edges of the repair parts and stiffeners. Refer to SRM 51-20-04.

Body Station 1016 Pressure Bulkhead Web Repair - All Gore Webs
Figure 14 (Sheet 1)

BOEING PROPRIETARY - Copyright © - Unpublished Work - See title page for details.

NOTES

- THIS REPAIR IS CATEGORY B. THE CATEGORY B REPAIR HAS FAA APPROVAL IF YOU DO THE SUPPLEMENTAL INSPECTIONS GIVEN IN TABLE II.
- DO INSPECTIONS AS GIVEN IN THE NDT MANUAL D6-37239, 53-10-64, PART 6, FIGURES 2 AND 3. DO INSPECTIONS IN THE REPAIR AREA ONLY. SEE DETAIL VII.
- THE INSPECTIONS DETAILED IN TABLE II OF THIS REPAIR ARE APPROVED AS AN ALTERNATIVE METHOD OF COMPLIANCE (AMOC) TO PARAGRAPH (G) OF AIRWORTHINESS DIRECTIVE (AD) 98-11-04 R1, FOR THE INSPECTION OF STRUCTURALLY SIGNIFICANT ITEMS F-30C AND F-30D OF SUPPLEMENTAL STRUCTURAL INSPECTION DOCUMENT (SSID) D6-37089, IN THE AREA AFFECTED BY THIS REPAIR. THIS AMOC ONLY APPLIES TO THE AREAS REPAIRED AS GIVEN IN THIS REPAIR AND TO THOSE AIRCRAFT IDENTIFIED IN THIS REPAIR. ALL PROVISIONS OF AD 98-11-02 R1 THAT ARE NOT SPECIFICALLY REFERENCED IN THE ABOVE STATEMENTS REMAIN FULLY APPLICABLE AND MUST BE COMPLIED WITH.
- D = FASTENER DIAMETER
- USE A MINIMUM OF 2D EDGE MARGIN.
- USE 4D-6D SPACING BETWEEN REPAIR FASTENERS.
- KEEP A MINIMUM OF 0.38 INCH EXTERNAL RADIUS AND 0.5 INCH INTERNAL RADIUS ON REPAIR PART CORNERS.
- WHEN YOU USE THIS REPAIR, REFER TO:
  - NDT MANUAL D6-37239, PART 6, 53-10-64 FOR EDDY CURRENT INSPECTION PROCEDURES AT THE APEX REGION OF THE STA 1016 PRESSURE BULKHEAD.
  - NDT MANUAL D6-37239, PART 6, 53-00-00 FIGURE 16, FOR HIGH FREQUENCY EDDY CURRENT (HFEC) ROTARY PROBE INSPECTION PROCEDURE
  - SOPM 20-41-02 FOR APPLICATION OF FINISHES
  - SRM 51-10-2 FOR PROTECTIVE TREATMENT OF METALLIC AND NONMETALLIC MATERIALS
  - SRM 51-20-4 FOR REPAIR SEALING
  - SRM 51-30 FOR FASTENER CODE, INSTALLATION AND REMOVAL, HOLE SIZES AND EDGE MARGINS.

[A] MAKE FROM AN UNDRILLED PRODUCTION WEB GORE THAT IS THE SAME AS THE CRACKED WEB. MAKE THE REPAIR PARTS FROM BOEING PART NUMBERS 65-46568-41, -43, -96, -187, -197, -515, -518, -524, -548, -567, -571, -574, OR 65C37292-8 AS APPLICABLE.

[B] THE DAMAGED DOME WEBS CAN BE USED AS A TEMPLATE TO MAKE THE PART 2 WEBS.

[C] DO NOT DRILL THE FASTENER LOCATIONS COMMON TO THE DOUBLER.

[D] TO ENSURE THE APPLICABLE DOUBLER IS THE CORRECT LENGTH:

- MOVE THE DOUBLER CONTOUR A MAXIMUM OF 3 INCHES FROM THE POSITION OF INSTALLATION AWAY FROM THE CENTER OF THE DOME WEB.

[E] USE REMOVABLE TYPE OF FASTENERS AT THE TEMPORARY FASTENER LOCATIONS.

[F] OTHER METHODS OF SEQUENCING THE ASSEMBLY OF THE REPAIR PARTS ARE ACCEPTABLE, PROVIDED THAT THE FINAL REPAIR CONFIGURATION DOES NOT DEVIATE FROM DETAIL III.

FASTENER SYMBOLS

- REFERENCE FASTENER LOCATION
- REPAIR FASTENER LOCATION. INSTALL A BACR15BB5D() RIVET.
- INITIAL FASTENER LOCATION. INSTALL A BACR15BB6D() RIVET.
- INITIAL FASTENER LOCATION. BEFORE A BACR15BB6D() RIVET IS INSTALLED, THE HOLE IS USE AS A TEMPORARY FASTENER LOCATION. [E]

REPAIR MATERIAL			
PART NO.	PART	QTY	MATERIAL
1	DOUBLER	7	[A]
2	WEB	7	[A] [B]

TABLE I

Body Station 1016 Pressure Bulkhead Web Repair - All Gore Webs
Figure 14 (Sheet 2)

BOEING PROPRIETARY - Copyright © - Unpublished Work - See title page for details.

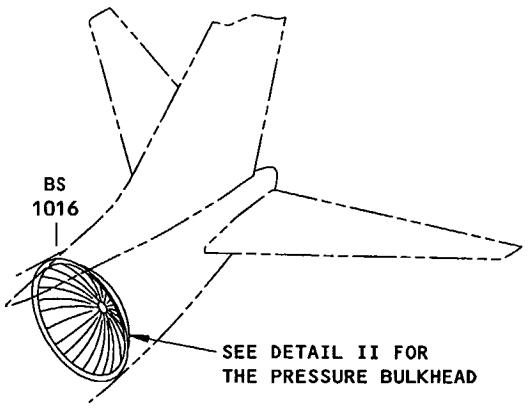

BODY STATION 1016 BULKHEAD LOCATION
DETAIL I

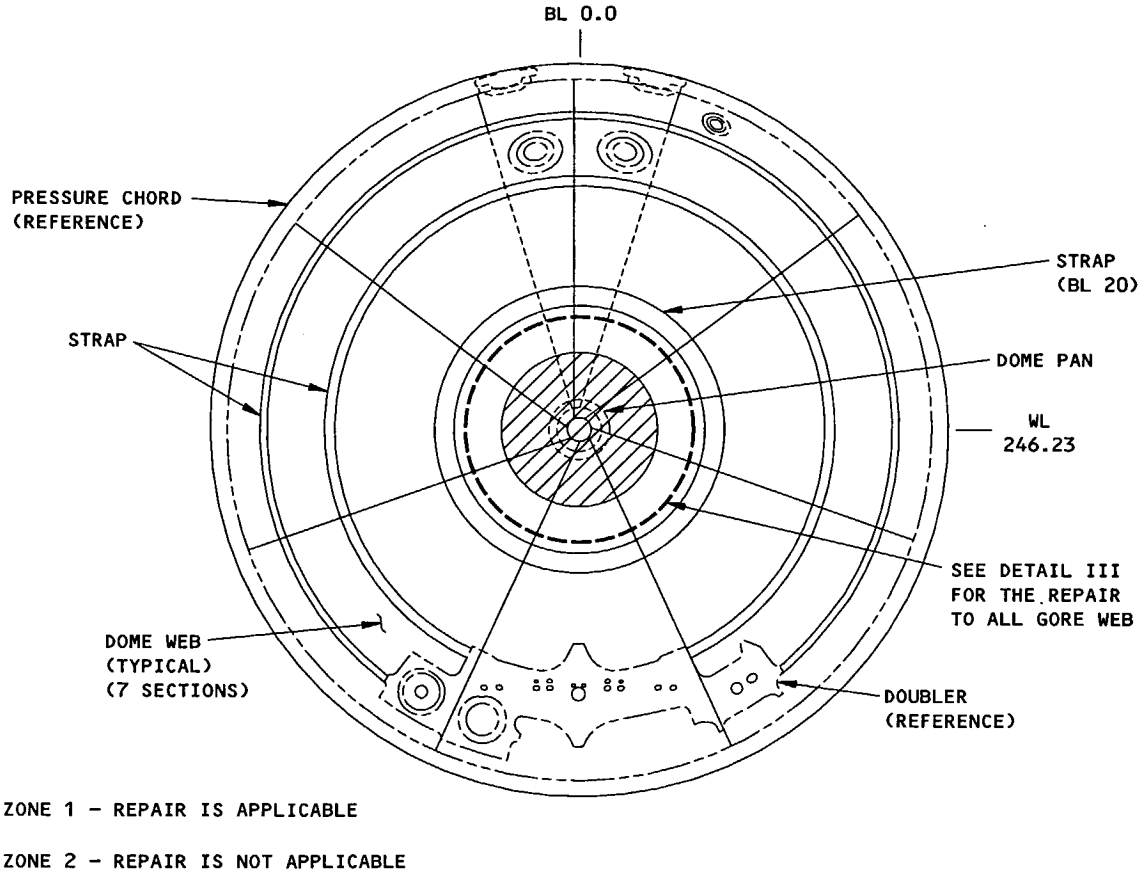

ZONE 1 - REPAIR IS APPLICABLE

ZONE 2 - REPAIR IS NOT APPLICABLE

VIEW WHEN YOU LOOK FORWARD

BODY STATION 1016 PRESSURE BULKHEAD
DETAIL II

Body Station 1016 Pressure Bulkhead Web Repair - All Gore Webs
Figure 14 (Sheet 3)

BOEING PROPRIETARY - Copyright © - Unpublished Work - See title page for details.

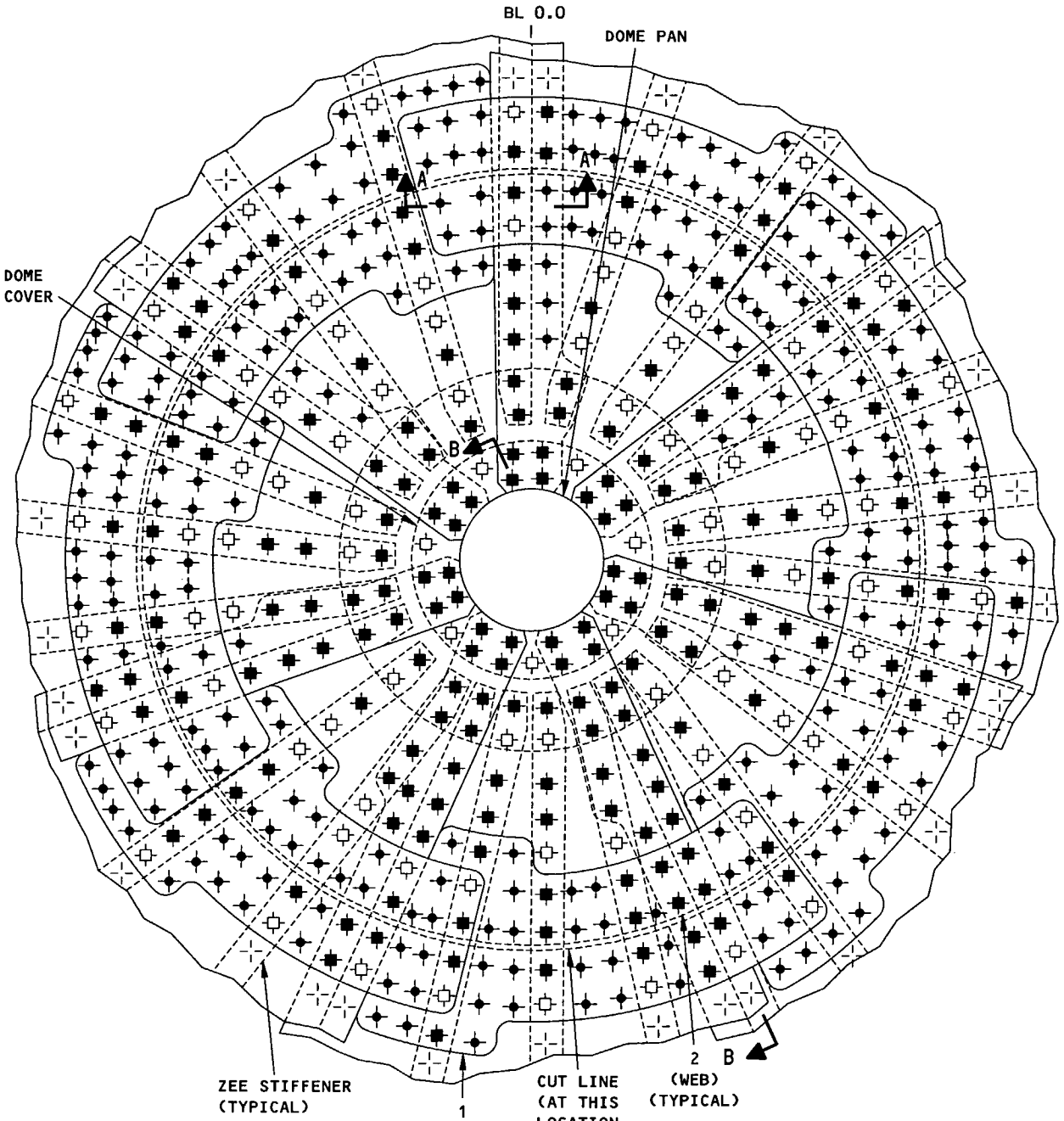

SUBSEQUENT INSPECTIONS ARE NECESSARY FOR CATEGORY B REPAIRS. SEE TABLE II FOR INSPECTION REQUIREMENTS.

VIEW WHEN YOU LOOK FORWARD

REPAIR FOR ALL GORE DOME WEBS
DETAIL III

Body Station 1016 Pressure Bulkhead Web Repair - All Gore Webs
Figure 14 (Sheet 4)

BOEING PROPRIETARY - Copyright © - Unpublished Work - See title page for details.

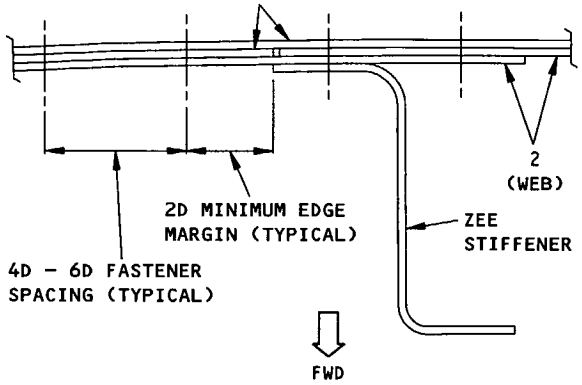

SECTION A-A

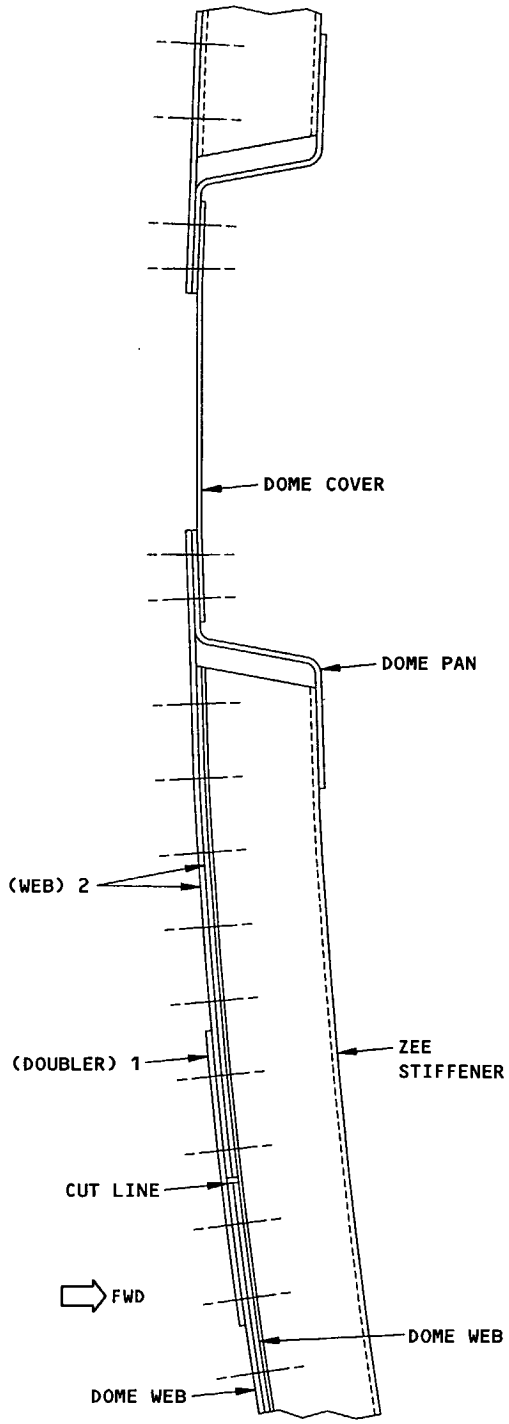

SECTION B-B

Body Station 1016 Pressure Bulkhead Web Repair - All Gore Webs
Figure 14 (Sheet 5)

BOEING PROPRIETARY - Copyright © - Unpublished Work - See title page for details.

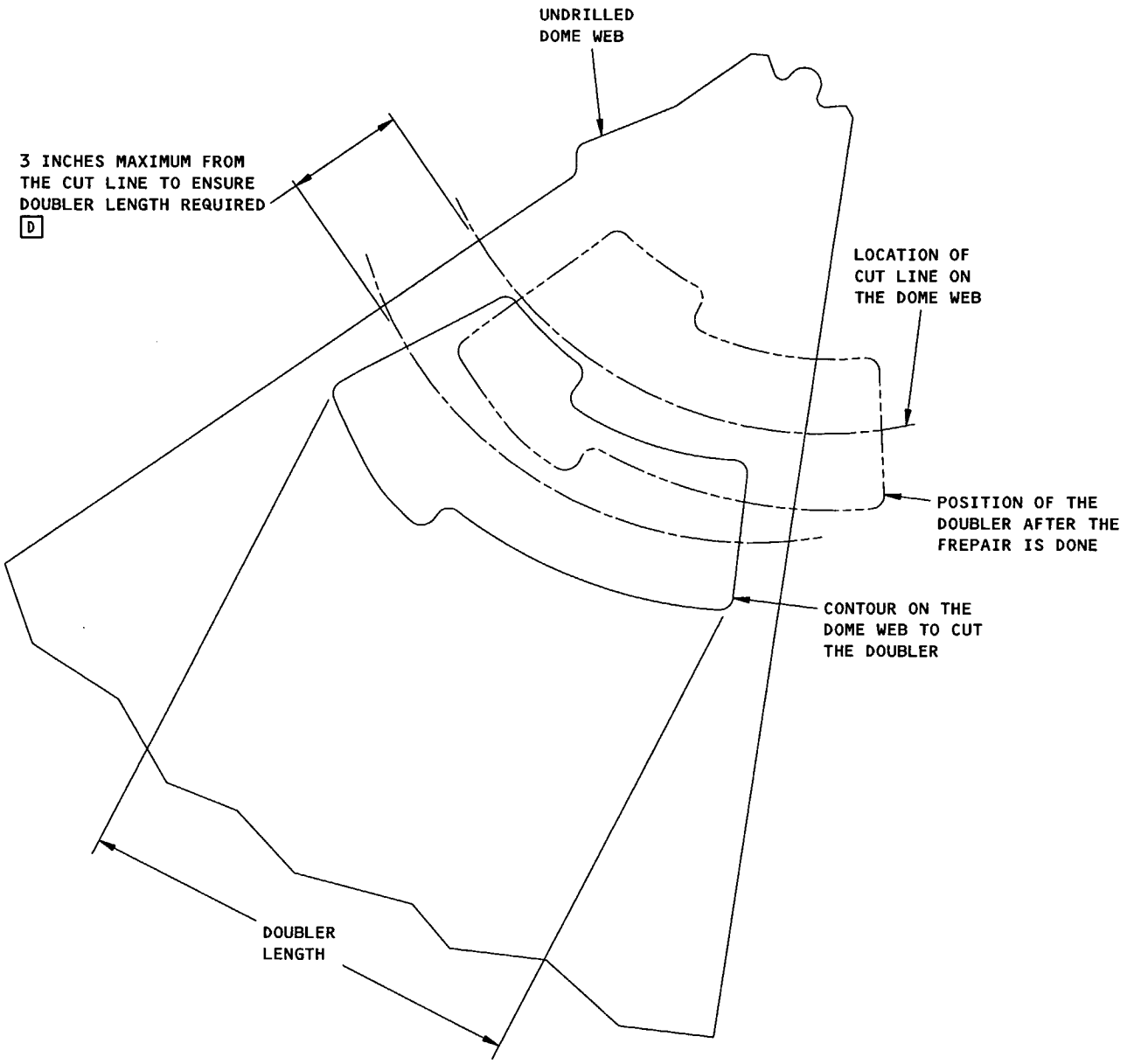

VIEW WHEN YOU LOOK FORWARD

TYPICAL DOUBLER PROFILE
DETAIL IV

Body Station 1016 Pressure Bulkhead Web Repair - Single Gore Web
Figure 14 (Sheet 6)

BOEING PROPRIETARY - Copyright © - Unpublished Work - See title page for details.

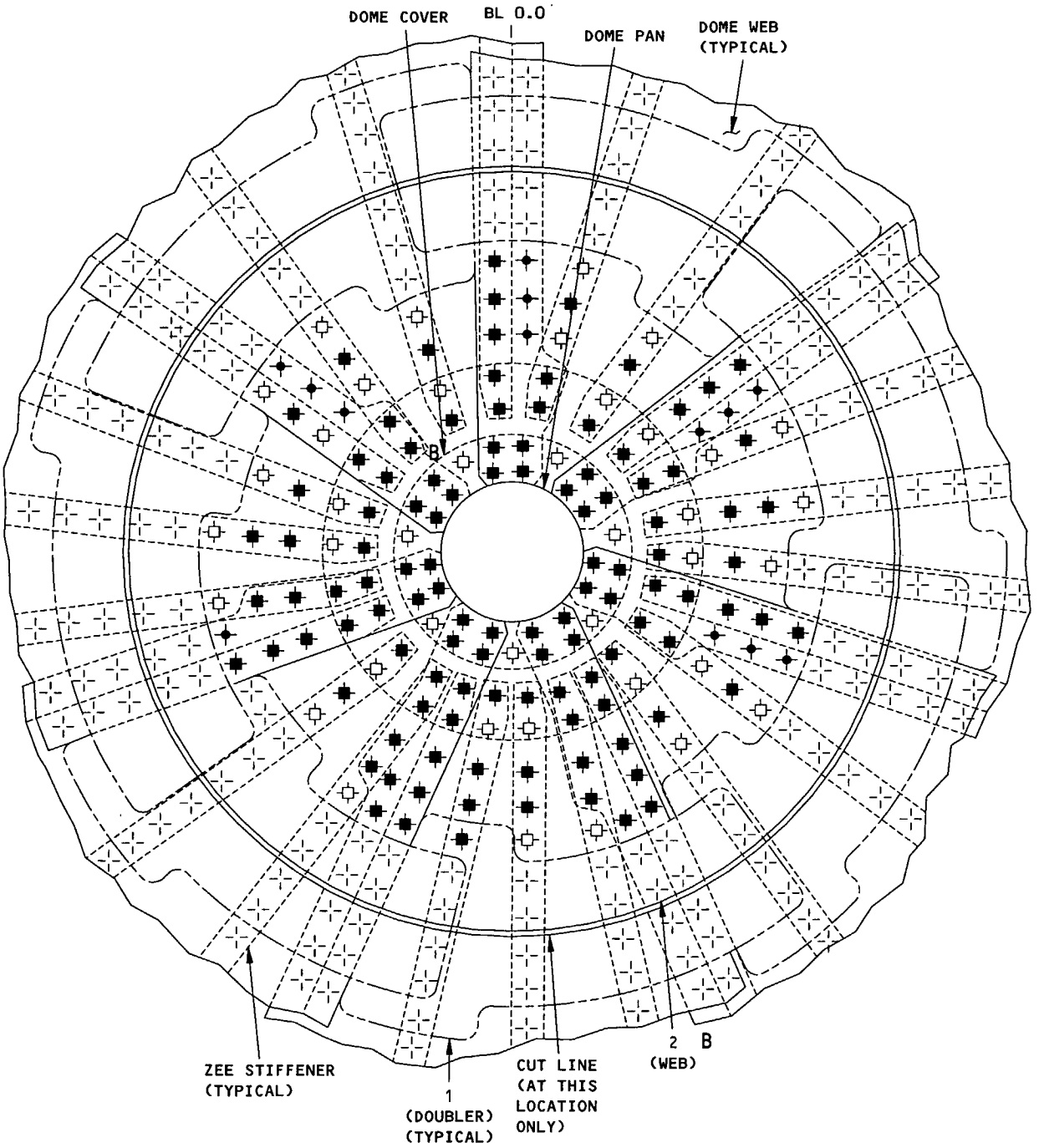

VIEW WHEN YOU LOOK FORWARD

FASTENER LOCATION COMMON TO GORE WEBS ONLY
DETAIL V

Body Station 1016 Pressure Bulkhead Web Repair - All Gore Webs
Figure 14 (Sheet 7)

BOEING PROPRIETARY - Copyright © - Unpublished Work - See title page for details.

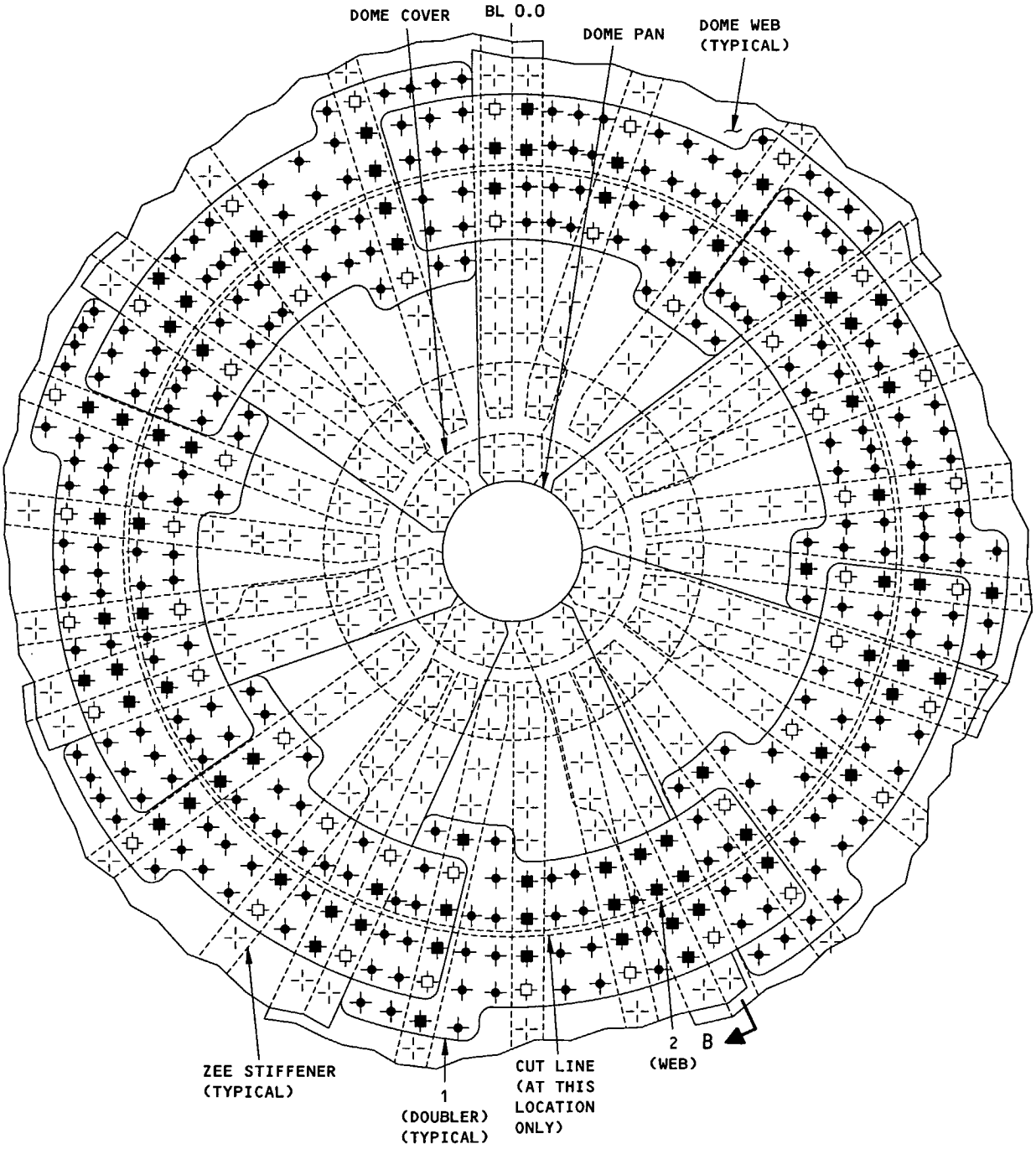

VIEW WHEN YOU LOOK FORWARD

FASTENER LOCATION COMMON TO DOUBLERS ONLY
DETAIL VI

Body Station 1016 Pressure Bulkhead Web Repair - All Gore Webs
Figure 14 (Sheet 8)

BOEING PROPRIETARY - Copyright © - Unpublished Work - See title page for details.

CATEGORY B REPAIR INSPECTION REQUIREMENTS			
INSPECTION THRESHOLD	REPEAT INSPECTION INTERVALS		
	METHOD	INTERVAL	REFERENCE
30,000 FLIGHT CYCLES FROM THE TIME THE REPAIR IS DONE IF THE AIRPLANE HAS MORE THAN 60,000 FLIGHT CYCLES THEN START THE REPEAT INSPECTIONS WITHIN 6,000 FLIGHT CYCLES FROM THE TIME THE REPAIR WAS DONE	HIGH FREQUENCY EDDY CURRENT (HFEC) LOW FREQUENCY EDDY CURRENT (LFEC)	6,000 FLIGHT CYCLES	NDT MANUAL D6-37239, PART 6, 53-10-64, FIGURES 2 AND 3
NOTE: INSPECT THE DOME WEB IN THE REPAIR AREA AS SHOWN IN DETAIL VII. REFER TO NDT, PART 6, 53-10-64, FIGURES 2 AND 3 TO INSPECT THE REPAIR WEB AND THE REPAIR DOUBLERS ONLY. NO INSPECTIONS ARE NECESSARY FOR THE UNDAMAGED DOME WEBS.			

TABLE II

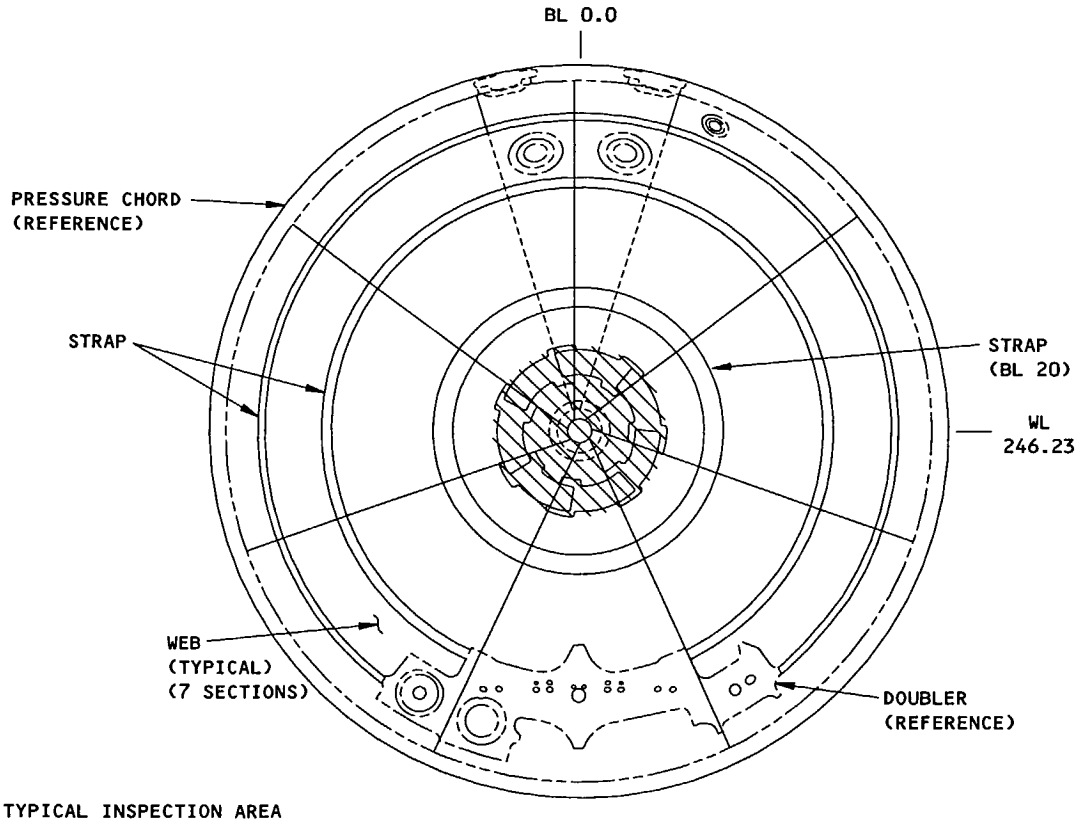

VIEW WHEN YOU LOOK FORWARD

TYPICAL INSPECTION AREA
DETAIL VII

Body Station 1016 Pressure Bulkhead Web Repair - All Gore Webs
Figure 14 (Sheet 9)

BOEING PROPRIETARY - Copyright © - Unpublished Work - See title page for details.

SERVICE BULLETIN REPAIRS

The following Service Bulletins contain stringer repairs which are available for use where specific damage has been encountered. Usually, the Service Bulletin also covers preventive modification data which operators are encouraged to use to eliminate the need for repair.

DAMAGED AREA	CUM LINE NUMBER EFFECTIVITY	SB NUMBER
APU AFT BULKHEAD INSTALLATION INSPECTION, REPAIR, PREVENTIVE MODIFICATION AND REPLACEMENT	6 AND 173 THRU 1585 AND 1, 2, 3, 5, 7 AND 9 THRU 35 THAT HAVE COMPLETED SERVICE BULLETIN 737-53-1001	737-49-1112
FUSELAGE - BODY STATION 1156 OUTBOARD CHORD INSPECTION, REPAIR AND MODIFICATION	1 THRU 1077	737-53-1086

BOEING PROPRIETARY - Copyright © - Unpublished Work - See title page for details.

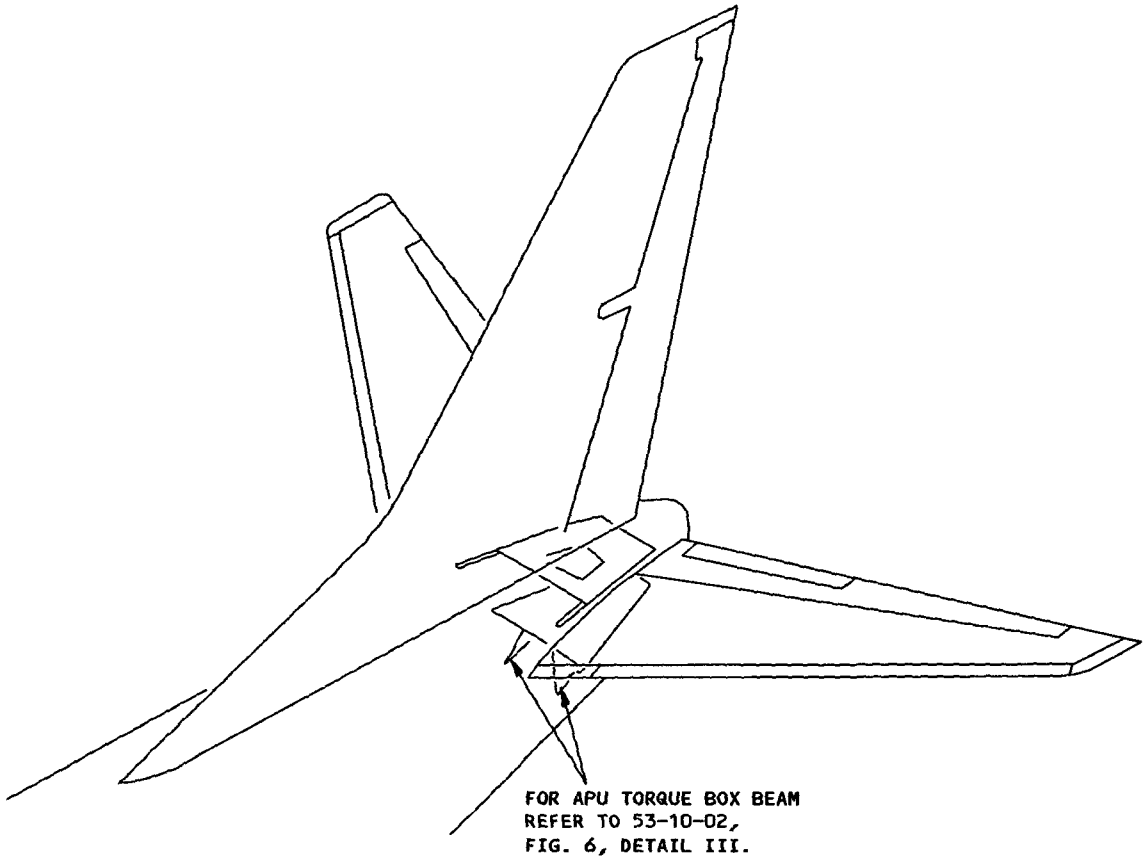

NOTES

- THIS REPAIR WILL NOT HAVE AN EFFECT ON A STRUCTURALLY SIGNIFICANT ITEM (SSI) GIVEN IN SRM 51-00-4, FIG. 3. THUS, NO CHANGE TO THE SUPPLEMENTAL STRUCTURAL INSPECTION DOCUMENT (SSID) INSPECTION PROGRAM IS NECESSARY.

[A] REFER TO 51-40-2, 51-40-3 AND 51-40-4 FOR TYPICAL WEB REPAIRS, TYPICAL FORMED SECTION REPAIRS AND TYPICAL EXTRUDED SECTION REPAIRS. THESE TYPICAL REPAIRS CAN BE USED WHERE APPLICABLE, IF SUFFICIENT SPACE IS AVAILABLE. THE REPAIR PARTS MUST HAVE SUFFICIENT CLEARANCE WITH ADJACENT STRUCTURE. SOME OF THE TYPICAL REPAIRS MUST NOT BE USED IN SOME AREAS OF THE AIRPLANE, AS GIVEN IN THE TYPICAL REPAIR FIGURES. REFER TO THE LIMITS IN THE TYPICAL REPAIR FIGURES BEFORE YOU START A REPAIR.

Section 48 APU Torque Box Beam Repairs
Figure 1 (Sheet 1)

BOEING PROPRIETARY - Copyright © - Unpublished Work - See title page for details.

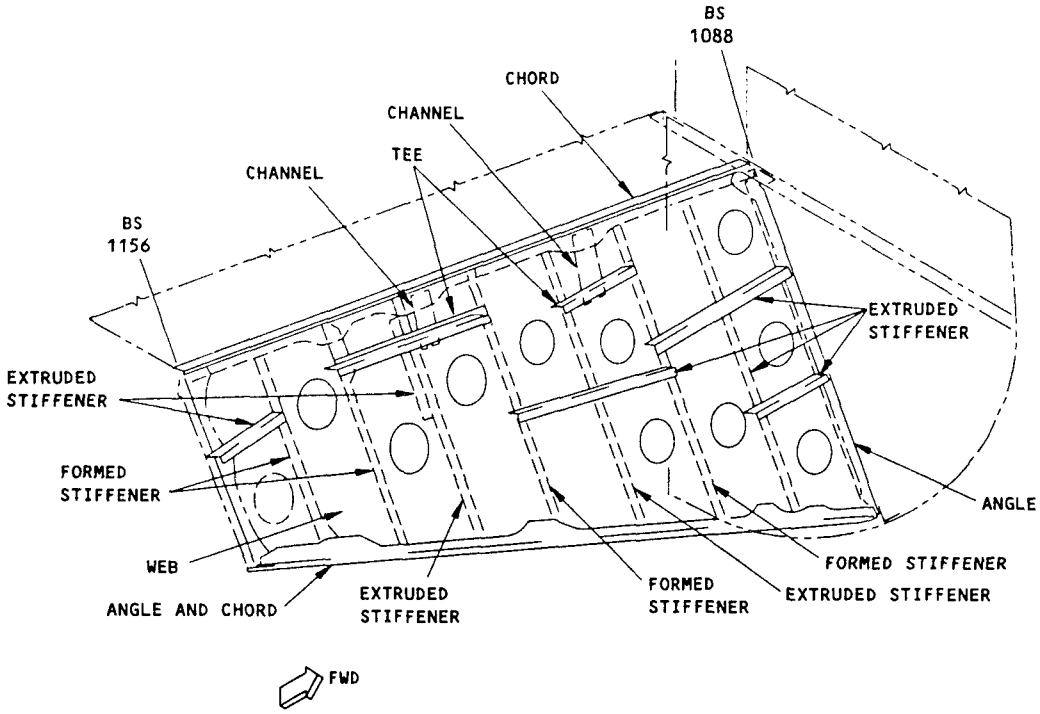

TORQUE BOX - LH SIDE

DETAIL I [A]

Section 48 APU Torque Box Beam Repairs
Figure 1 (Sheet 2)

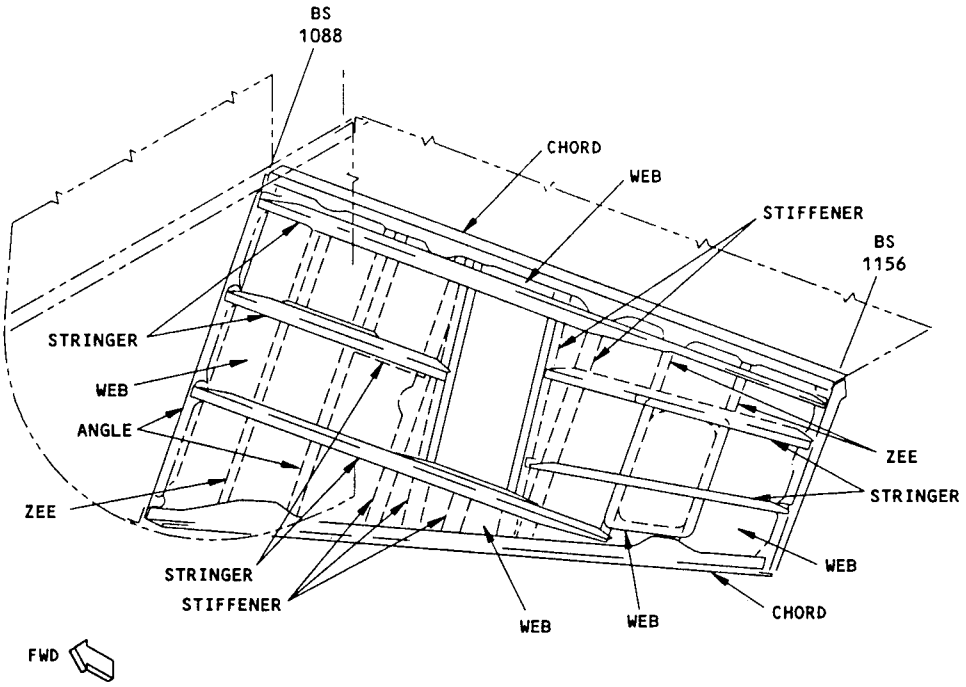

TORQUE BOX - RH SIDE

DETAIL II [A]

Section 48 APU Torque Box Beam Repairs
Figure 1 (Sheet 3)

REPAIR INSTRUCTIONS

1. For easier access to the APU, two holes may be cut in the torque box.
2. Make the repair parts.
3. Cut a smooth circular opening in the web as shown. Do not cut into other structure or equipment.
4. Remove the fasteners and skin panels as necessary to install the fillers and doublers around the hole opening.
5. Assemble the parts and drill the holes as necessary.
6. Apply a chemical conversion coating to all bare surfaces of the repair parts and the initial structure.
7. Restore the initial finish.
8. Locate the doublers and fillers and install the fasteners, using BMS 5-95 fay surface sealant between the web and doubler.
9. Locate and install BACN10JR3F nutplates on the inner surface of web as shown.
10. Apply BAC5010, Type 60 adhesive and 598-5002 parting agent to the cover plates (1) and (2). Refer to SOPM 20-50-19 for instructions to make removeable seals. [A]
11. Locate the cover plate and install the fasteners.
12. Remove loose debris and particles.

NOTES

- THIS REPAIR WILL NOT HAVE AN EFFECT ON A STRUCTURALLY SIGNIFICANT ITEM (SSI) GIVEN IN SRM 51-00-4, FIG. 3. THUS, NO CHANGE TO THE SUPPLEMENTAL STRUCTURAL INSPECTION DOCUMENT (SSID) INSPECTION PROGRAM IS NECESSARY.
- REFER TO AMM 51-21-00 FOR INTERIOR AND EXTERIOR FINISHES.
- REFER TO AMM 51-30-07 FOR GENERAL SEALING REQUIREMENTS.
- REFER TO SOPM 20-50-19 FOR GENERAL SEALING.
- REFER TO SRM 51-10-02 FOR PROTECTIVE TREATMENT OF METAL.
- REFER TO SRM 51-30 FOR FASTENER CODE REMOVAL AND INSTALLATION, HOLE SIZES AND EDGE MARGINS.
- BREAK THE SHARP EDGES OF THE INITIAL AND REPAIR PARTS 0.015 TO 0.030 INCH.

[A] 598-5002 PARTING AGENT IS AVAILABLE FROM:

LILLY INDUSTRIES
13535 MONSTER ROAD S.
SEATTLE, WA 98178

PHONE: (206) 772-6550
FAX: (206) 772-3050

FASTENER SYMBOLS

- ⊕ INITIAL FASTENER LOCATION
- ◑ REPAIR FASTENER LOCATION. INSTALL A BACB30MC6-5 BOLT WITH A BACC30X COLLAR.
- ◕ REPAIR FASTENER LOCATION. INSTALL A BACR15BB6D RIVET.
- ● REPAIR FASTENER LOCATION. INSTALL A BACB30MC6-4 BOLT WITH A BACC30X COLLAR.
- ○ REPAIR FASTENER LOCATION. INSTALL A BACR15CE3D RIVET.
- ◐ REPAIR FASTENER LOCATION. INSTALL A BACB30NE3-3 BOLT.
- ◔ REPAIR FASTENER LOCATION. INSTALL A BACR15CE5D RIVET.
- ◉ REPAIR FASTENER LOCATION. INSTALL A BACR15BB5D RIVET.

REPAIR MATERIAL			
PART		QTY	MATERIAL
(1) (2)	COVER PLATE	1 EACH	0.063 INCH THICK CLAD 2024-T3
(3) (4)	DOUBLER	1 EACH	0.056 INCH THICK CLAD 2024-T3
(5)	FILLER	1	0.010 TO 0.056 INCH THICK X 4.80 INCH CLAD 2024-T3
(6)	FILLER	1	0.010 TO 0.056 INCH THICK X 7.90 INCH CLAD 2024-T3

Installation of Access Holes R.H. Lower Torque Box
(APU Plenum) - Modification
Figure 2 (Sheet 1)

BOEING PROPRIETARY - Copyright © - Unpublished Work - See title page for details.

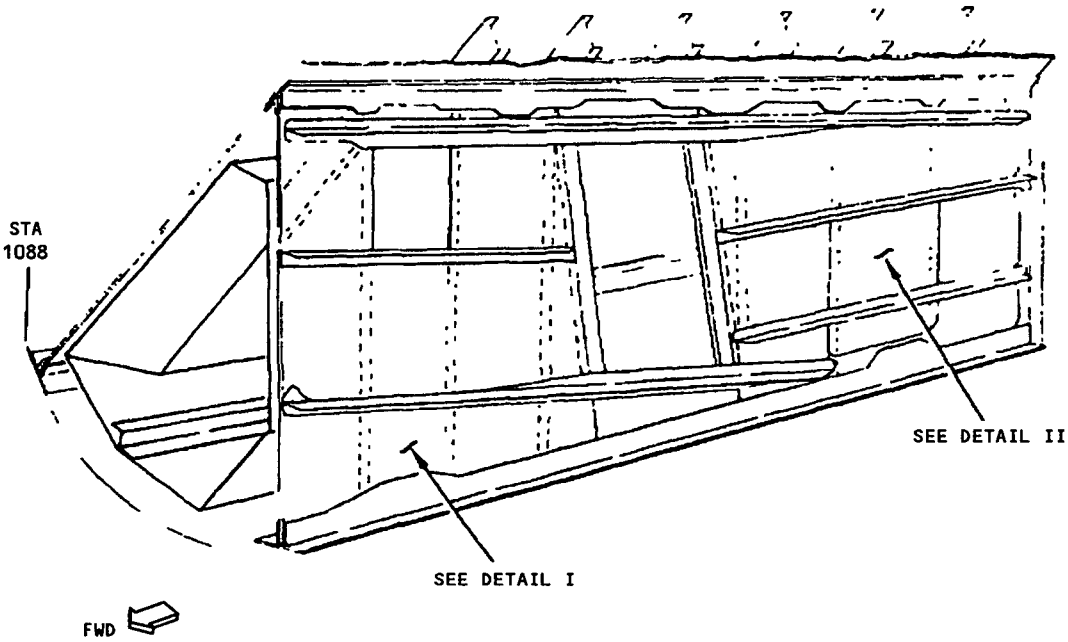

TORQUE BOX - R.H. SIDE

Installation of Access Holes R.H. Lower Torque Box
(APU Plenum) - Modification
Figure 2 (Sheet 2)

BOEING PROPRIETARY - Copyright © - Unpublished Work - See title page for details.

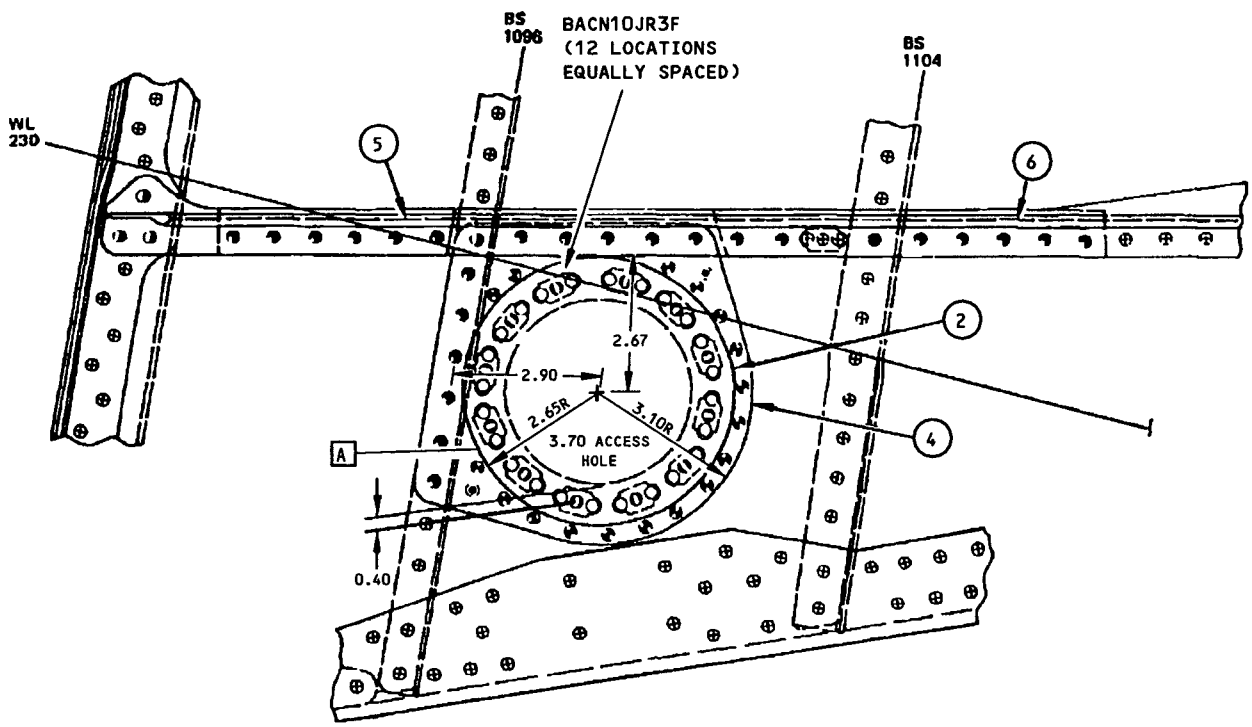

DETAIL I

Installation of Access Holes R.H. Lower Torque Box
(APU Plenum) - Modification
Figure 2 (Sheet 3)

BOEING PROPRIETARY - Copyright © - Unpublished Work - See title page for details.

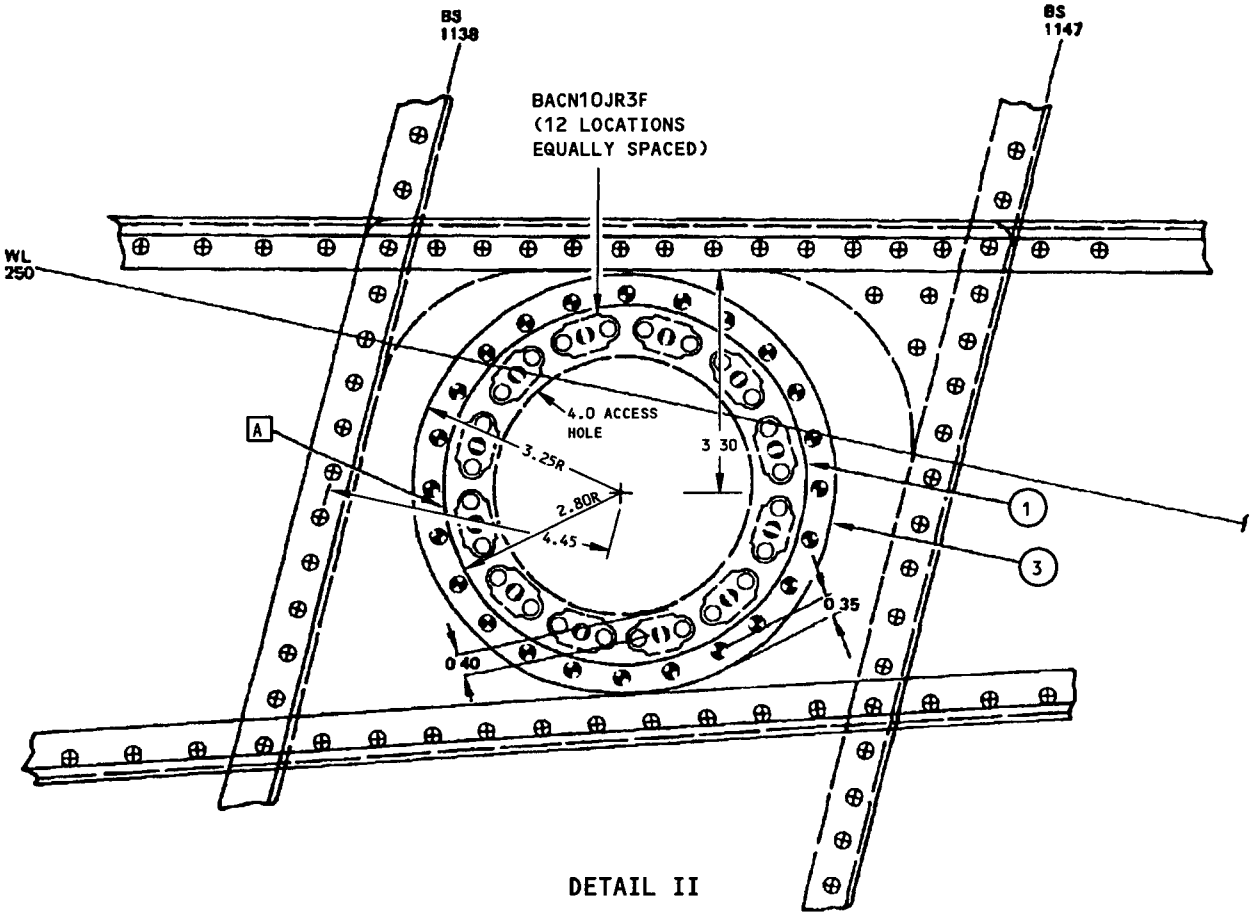

Installation of Access Holes R.H. Lower Torque Box
(APU Plenum) - Modification
Figure 2 (Sheet 4)

BOEING PROPRIETARY - Copyright © - Unpublished Work - See title page for details.

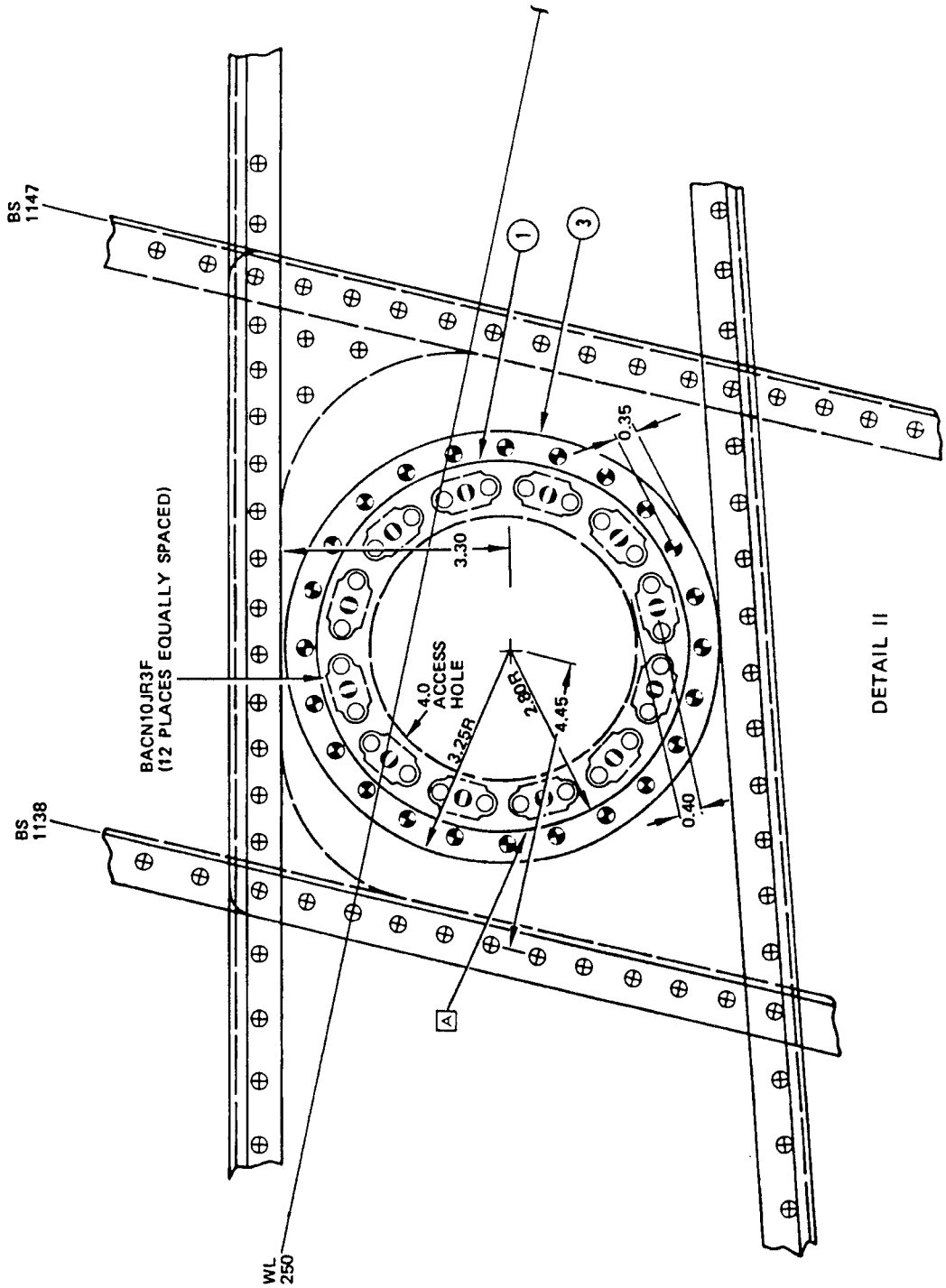

Installation of Access Holes R.H. Lower Torque Box
(APU Plenum) Modification
Figure 2 (Sheet 5)

APPLICABILITY

THIS REPAIR IS APPLICABLE TO WEB DAMAGE AT THE APU DUCT CUTOUT LOCATED AT STA. 1088 BULKHEAD

AFTER YOU FOUND THE DAMAGE, USE:

- ALTERNATIVE I IF THE DAMAGE IS IN REPAIR ZONE C
- ALTERNATIVE II IF THE DAMAGE IS IN REPAIR ZONE B
- ALTERNATIVE III IF THE DAMAGE IS IN REPAIR ZONE B AND REPAIR ZONE C
- ALTERNATIVE IV IF THE DAMAGE IS IN REPAIR ZONE A, REPAIR ZONE B AND REPAIR ZONE C

REPAIR INSTRUCTIONS

1. Get access to the damaged area.
2. Do a visual inspection of the damaged area. If the damage is within the limits of Detail II, continue with Step 3. If the damage is not within the limits of Detail II, contact The Boeing Company.
3. Use ALTERNATIVE I if the damage is in REPAIR ZONE C. See DETAIL II and DETAIL III.

   Use ALTERNATIVE II if the damage is in REPAIR ZONE B. See DETAIL II and DETAIL IV.

   Use ALTERNATIVE III if the damage is in REPAIR ZONE B and REPAIR ZONE C. See DETAIL II and DETAIL V.

   Use ALTERNATIVE IV if the damage is in REPAIR ZONE A, REPAIR ZONE B and REPAIR ZONE C. See DETAIL II and DETAIL VI.

ALTERNATIVE I

1. Remove the fasteners from the damaged web, stiffeners or other structure as necessary. Remove stiffeners as necessary to gain access. See Detail III.

WARNING: WEAR PROTECTIVE CLOTHING AND EYE PROTECTION WHEN YOU USE SOLID CARBON DIOXIDE (DRY ICE). MAKE SURE YOU HAVE SUFFICIENT VENTILATION AND DO NOT USE DRY ICE IN AN ENCLOSED SPACE. DRY ICE CAN INJURE YOUR SKIN OR CAUSE BREATHING PROBLEMS.

2. Carefully drive nylon or hardwood wedges between the web and the stiffeners or other structure as necessary in the repair area. Use sufficient wedges to gradually separate the parts.

   NOTE: To help separate the sealed parts, cold soak the area with solid carbon dioxide (dry ice) for approximately 30 minutes before you use wedges.

3. Carefully cut out the damaged web. Cut out the minimum amount of material necessary to remove the damage. Use a thin steel sheet as needed to protect the adjacent structure.

   NOTE: Keep 0.50 inch minimum corner radius and 2 diameters edge margin to all fasteners on skin cutouts.

4. Do a detailed visual inspection along the cut edge of the cutout to ensure all evidence of the corrosion has been removed.
5. Make the repair parts as given in Detail III and Table I.
6. Assemble the repair parts and drill the fastener holes. Refer to Detail III.
7. Disassemble the repair parts.
8. Remove the nicks, scratches, gouges, burrs, and sharp edges from the repair parts and the web. The edges of the cutout must have surface smoothness of 125 microinches Ra or better.
9. Apply a chemical conversion coating to the repair parts and to the bare surfaces of the initial parts. Refer to SRM 51-10-2.
10. Apply two layers of BMS 10-11, Type I primer to the repair parts and to the bare surfaces of the initial parts. Refer to SRM 51-10-2.
11. Install countersink repair washers in the initial countersink locations. Install the repair washers with BMS 5-95 sealant. Refer to SRM 51-30-8.
12. Install the repair parts with BMS 5-95 sealant between the mating surface. Fill all gaps with BMS 5-95 sealant. Refer to SRM 51-20-4.
13. Shim and install part 3 (filler) before you install the fasteners. A maximum pull-up gap of 0.010 inch is permitted.
14. Install the fasteners within the squeeze-out life of the sealant. Refer to SRM 51-20-4. Install non-aluminum fasteners wet with BMS 5-95 sealant.
15. Apply one layer of BMS 10-11, Type II enamel to the repair area. Refer to SOPM 20-41-02.
16. Apply one layer BMS 3-23 or BMS 3-29 (or equivalent) corrosion inhibiting compound to the entire repair area. Refer to SRM 51-10-2.
17. Install the adjacent structure, which was removed to get access to the damaged area.

STA 1088 Bulkhead Web Repair - APU Air Inlet Duct Cutout
Figure 3 (Sheet 1)

BOEING PROPRIETARY - Copyright © - Unpublished Work - See title page for details.

ALTERNATIVE II

1. Remove the fasteners from the damaged web, stiffeners, shear ties, stringer clips or other structure as necessary. Remove stiffeners, shear ties, stringer clips as necessary to gain access. See Detail IV.

WARNING: WEAR PROTECTIVE CLOTHING AND EYE PROTECTION WHEN YOU USE SOLID CARBON DIOXIDE (DRY ICE). MAKE SURE YOU HAVE SUFFICIENT VENTILATION AND DO NOT USE DRY ICE IN AN ENCLOSED SPACE. DRY ICE CAN INJURE YOUR SKIN OR CAUSE BREATHING PROBLEMS.

2. Carefully drive nylon or hardwood wedges between the web and the stiffeners or other structure as necessary in the repair area. Use sufficient wedges to gradually separate the parts.

   NOTE: To help separate the sealed parts, cold soak the area with solid carbon dioxide (dry ice) for approximately 30 minutes before you use wedges.

3. Carefully cut out the damaged web. Cut out the minimum amount of material necessary to remove damage. Use a thin steel sheet as needed to protect the adjacent structure.

   NOTE: Keep 0.5 inch minimum corner radius and 2 diameters edge margin to all fasteners on skin cutouts.

4. Do a detailed visual inspection along the edge of the cutout to ensure all evidence of the corrosion has been removed.
5. Make the repair parts as given in DETAIL IV and Table I.
6. Assemble the repair parts and drill the fastener holes. Refer to DETAIL IV.
7. Disassemble the repair parts.
8. Remove the nicks, scratches, gouges, burrs, and sharp edges from the repair parts and the web. The edges of the cutout must have a surface smoothness of 125 microinches Ra or better.
9. Apply a chemical conversion coating to the repair parts and the bare surface of the initial parts. Refer to SRM 51-10-2.
10. Apply two layers of BMS 10-11, Type I primer to the repair parts and to the bare surfaces of the intital parts. Refer to SRM 51-10-2.
11. Install countersink repair washers in the initial countersink locations. Install them with BMS 5-95 sealant. Refer to SRM 51-30-8.

    NOTE: Make sure the depth of the countersink will not be more than 80 percent of the repair part thickness, when you use countersink fasteners.

12. Install the repair parts with BMS 5-95 sealant between the mating surface. Fill all gaps with BMS 5-95 sealant. Refer to SRM 51-20-4.
13. Make new replacement shear ties and stringer clips around the APU intake cutout as necessary. Use the same material and gage as the initial parts.
14. Shim and install part 3 (filler) before you install the fasteners. A maximum pull-up gap of 0.010 inch is permitted.
15. Install the fasteners within the squeeze-out life of the sealant. Refer to SRM 51-20-4. Install non-aluminum fasteners wet with BMS 5-95 sealant.
16. Apply one layer of BMS 10-11, Type II enamel to the internal surfaces of the repair area. Refer to SOPM 20-41-02.
17. Apply one layer of BMS 3-23 or BMS 3-29 (or equivalent) corrosion inhibiting compound to the entire repair area. Refer to SRM 51-10-2.
18. Install the adjacent structure, which was removed to get access to the damage area.

ALTERNATIVE III

1. Remove the fasteners from the damaged web, stiffners, shear ties, stringer clips or other structure as necessary. Remove stiffeners, shear ties, stringer clips as necessary to gain access. See Detail V.

WARNING: WEAR PROTECTIVE CLOTHING AND EYE PROTECTION WHEN YOU USE SOLID CARBON DIOXIDE (DRY ICE). MAKE SURE YOU HAVE SUFFICIENT VENTILATION AND DO NOT USE DRY ICE IN AN ENCLOSED SPACE. DRY ICE CAN INJURE YOUR SKIN OR CAUSE BREATHING PROBLEMS.

STA 1088 Bulkhead Web Repair - APU Air Inlet Duct Cutout
Figure 3 (Sheet 2)

BOEING PROPRIETARY - Copyright © - Unpublished Work - See title page for details.

ALTERNATIVE III (CONTINUED)

2. Carefully drive nylon or hardwood wedges between the web and the stiffeners or structure as necessary in the repair area. Use sufficient wedges to gradually separate the parts.

   NOTE: To help separate the sealed parts, cold soak the area with solid carbon dioxide (dry ice) for approximately 30 minutes before you use wedges.

3. Carefully cut out the damaged web. Cut out the minimum amount of material necessary to remove the damage. Use a thin steel sheet as needed to protect the adjacent structure.

   NOTE: Keep 0.50 inch minimum corner radius and 2 diameters edge margin to all fasteners on skin cutouts.

4. Do a detailed visual inspection along the cut edge of the cutout to ensure all evidence of the corrosion has been removed.
5. Make the repair parts as given in Detail V and Table I.
6. Assemble the repair parts and drill the fastener holes. Refer to DETAIL V.
7. Disassemble the repair parts.
8. Remove the nicks, scratches, gouges, burrs, and sharp edges from the repair parts and the web. The edges of the cutout must have surface smoothness of 125 microinches Ra or better.
9. Apply a chemical conversion coating to the repair parts and the bare surface of the initial parts. Refer to SRM 51-10-2.
10. Apply with two layers of BMS 10-11, Type 1 primer to the repair parts and to the bare surfaces of the initial parts. Refer to SRM 51-10-2.
11. Install countersink repair washers in the initial countersink locations. Install them with BMS 5-95 sealant. Refer to SRM 51-30-8.

    NOTE: Make sure the depth of the countersink will not be more than 80 percent of the repair part thickness. when you use countersink fasteners

12. Install the repair parts with BMS 5-95 sealant between the mating surface. Fill all gaps with BMS 5-95 sealant. Refer to SRM 51-20-4.
13. Make new replacement shear ties and stringer clips around the APU intake cutout as necessary. Use the same material and gage as the initial parts.
14. Shim and install part 3 (filler) before you install the fasteners. A maximum pull-up gap of 0.010 inch is permitted.
15. Install the fasteners within the squeeze-out life of the sealant. Refer to SRM 51-20-4. Install non-aluminum fasteners wet with BMS 5-95 sealant.
16. Apply one layer of BMS 10-11, Type II enamel to the internal surfaces of the repair area. Refer to SOPM 20-41-02.
17. Apply one coat BMS 3-23 or BMS 3-29 (or equivalent) corrosion inhibiting compound to the entire repair area. Refer to SRM 51-10-2.
18. Install the adjacent structure, which was removed to get access to the damage area.

ALTERNATIVE IV

1. Remove the fasteners from the damaged web, stiffeners, shear ties, stringer clips or structure as necessary. Remove stiffeners, shear ties, stringer clips as necessary to gain access. See Detail VI.

   WARNING: WEAR PROTECTIVE CLOTHING AND EYE PROTECTION WHEN YOU USE SOLID CARBON DIOXIDE (DRY ICE) MAKE SURE YOU HAVE SUFFICIENT VENTILATION AND DO NOTUSE DRY VENTILATION AND DO NOT USE DRY ICE IN AN ENCLOSED SPACE. DRY ICE CAN INJURE YOUR SKIN AND CAUSE BREATHING PROBLEMS.

2. Carefully drive nylon or hardwood wedges between the web and the stiffeners or other structure as necessary in the repair area. Use sufficient wedges to gradually separate the parts.

   NOTE: To help separate the sealed parts, cold soak the area with solid carbon dioxide (dry ice) for approximately 30 minutes before you use wedges.

3. Carefully cut out the damaged web. Cut out the minimum amount of material necessary to remove the damaage. Use thin steel sheets as needed to protect the adjacent structure.

   NOTE: Keep 0.5 inch minimum corner radius and 2 diameters edge margin to all fasteners on skin cutouts.

STA 1088 Bulkhead Web Repair - APU Air Inlet Duct Cutout
Figure 3 (Sheet 3)

BOEING PROPRIETARY - Copyright © - Unpublished Work - See title page for details.

ALTERNATIVE IV (CONTINUED)

4. Do a detailed visual inspection along the edge of the cutout to ensure all evidence of the corrosion has been removed.
5. Make the repair parts as given in Detail VI and Table I.
6. Assemble the repair parts and drill the fastener holes. Refer to DETAIL VI.
7. Disassemble the repair parts.
8. Remove the nicks, scratches, gouges, burrs, and sharp edges from the repair parts and the web. The edges of the cutout must have surface smoothness of 125 microinches Ra or better.
9. Apply a chemical conversion coating to the repair parts and the bare surface of the initial parts. Refer to SRM 51-10-2.
10. Apply two layers of BMS 10-11, Type I primer to the repair parts and to the bare surfaces of the initial parts. Refer to SRM 51-10-2.
11. Install countersink repair washers in the initial countersink locations. Install them with BMS 5-95 sealant. Refer to SRM 51-30-8.

    NOTE: Make sure the depth of the countersink will not be more than 80 percent of the pair part thickness, when you use countersink fasteners.
12. Install the repair parts with BMS 5-95 sealant between the mating surface. Fill all gaps with BMS 5-95 sealant. Refer to SRM 51-20-4.
13. Make new replacement shear ties and stringer clips around the APU intake cutout as necessary. Use the same material and gage as the initial parts.
14. Shim and install part 3 (filler) before you install the fasteners. A maximum pull-up gap of 0.010 inch is permitted.
15. Install the fasteners within the squeeze-out life of the sealant. Refer to SRM 51-20-05. Install non-aluminum fasteners wet with BMS 5-95 sealant.
16. Apply one layer of BMS 10-11, Type II enamel to the repair area. Refer to SOPM 20-41-02.
17. Apply one layer of BMS 3-23 or BMS 3-29 (or equivalent) corrosion inhibiting compound to the entire repair area. Refer to SRM 51-10-2.
18. Install the adjacent structure, which was removed to get access to the damage area.

NOTES

- D = FASTENER DIAMETER.
- WHEN YOU USE THIS REPAIR REFER TO:
  - SRM 51-10-1 FOR THE INVESTIGATION AND CLEANUP OF DAMAGE
  - SRM 51-10-2 FOR PROTECTIVE TREATMENT OF METAL
  - SRM 51-20-1 FOR SHEET METAL MATERIALS
  - SRM 51-20-4 FOR REPAIR SEALING
  - SRM 51-30 FOR FASTENER CODE, INSTALLATION AND REMOVAL, HOLE SIZES, AND EDGE MARGINS
  - SRM 51-30-8 FOR COUNTERSINKING OF HOLES AND USE OF COUNTERSINK REPAIR WASHERS.

[A] THIS DETAIL SHOWS THE MAXIMUM PERMITTED CUTOUT. IF THE DAMAGE CANNOT BE REMOVED WITH THIS CUTOUT, CONTACT THE BOEING COMPANY.

[B] YOU CAN MOVE THE UPPER EDGE OF THE TRIM-OUT DOWN IN THE AREA LIMITED BY [C].

[C] THE UPPER EDGE OF THE TRIM-OUT MUST BE INSIDE THESE LIMITS. KEEP A MINIMUM OF TWO FASTENER ROWS FOR THE DOUBLER BEYOND THE END OF THE CUT.

[D] THE HOLE DIAMETER IS 0.166 $^{0.171}_{0.166}$ INCH ON AIRPLANES WITH BASIC EFFECTIVITIES P8501 THRU P8501, P8801 THRU P8804, P3501 THRU P3509, P0001 THRU P0025, P2501 THRU P2635.

[E] INSTALL BACR15FT5D() RIVETS FOR AIRPLANES WITH BASIC EFFECTIVITIES P8501 THRU P8501, P8801 THRU P8804, P3501 THRU P3509, P0001 THRU P0025, P2501 THRU P2635.

[F] MAKE SURE THE REPAIR DOUBLER HAS TWO ROWS OF FASTENERS PAST THE TRIM-OUT. KEEP A 2D MINIMUM EDGE MARGIN.

[G] REMOVE AND REPLACE THE INITIAL SHEAR TIES AND STRINGER CLIPS WITH NEW PARTS TO COMPENSATE FOR THE THICKNESS OF THE PART 1 (DOUBLER).

[H] INSTALL A PART 3 (FILLER) AS NECESSARY IF 69-40277-501/-507 OR 69-40277-502/-508 CLIPS ARE INSTALLED COMMON TO THE SHEAR TIE.

[I] THE VERTICAL STIFFENER EXTENDS ABOVE THE 65-46572-538 HORIZONTAL STIFFENER ON AIRPLANES WITH BASIC EFFECTIVITIES P0001-P0025, P0901-P0905, P2501-P2821, P3501-P4419, P8501-P8978.

STA 1088 Bulkhead Web Repair - APU Air Inlet Duct Cutout
Figure 3 (Sheet 4)

BOEING PROPRIETARY - Copyright © - Unpublished Work - See title page for details.

FASTENER SYMBOLS

- REFERENCE FASTENER LOCATION.
- INITIAL FASTENER LOCATION. INSTALL A BACR15CE6D() RIVET.
- INITIAL FASTENER LOCATION. INSTALL A BACR15CE5D() RIVET.
- INITIAL FASTENER LOCATION (NOT ON ALL AIRPLANES). INSTALL A BACR15FT4D() RIVET AS NECESSARY.
- INITIAL FASTENER LOCATION. INSTALL A BACR15FT5D() RIVET OR BACR15BB5D() RIVET.
- INITIAL FASTENER LOCATION. INSTALL A BACR15FT6D() RIVET.
- REPAIR FASTENER LOCATION. INSTALL A BACR15BB6D() RIVET.
- INITIAL FASTENER LOCATION. INSTALL A BACB30MC6() HEX DRIVE BOLT WITH A BACC30X COLLAR.
- INITIAL FASTENER LOCATION. INSTALL BACB30NX6K()X HEX DRIVE BOLT WITH A BACC30X COLLAR OR BACB30MY6K()X HEX DRIVE BOLT WITH A BACC30M COLLAR.
- INITIAL FASTENER LOCATION. INSTALL SAME TYPE AND DIAMETER FASTENER AS THE INITIAL FASTENER.
  (HOLE DIAMETER 0.201 $^{0.210}_{0.201}$ INCH)
  (24 LOCATIONS)

REPAIR MATERIAL			
PART		QTY	MATERIAL
1	DOUBLER [F]	1	0.040 CLAD 7075-T6
2	FILLER	AS NECESSARY	0.032 CLAD 7075-T6
3	FILLER	AS NECESSARY	0.040 CLAD 7075-T6

TABLE I

STA 1088 Bulkhead Web Repair - APU Air Inlet Duct Cutout
Figure 3 (Sheet 5)

BOEING PROPRIETARY - Copyright © - Unpublished Work - See title page for details.

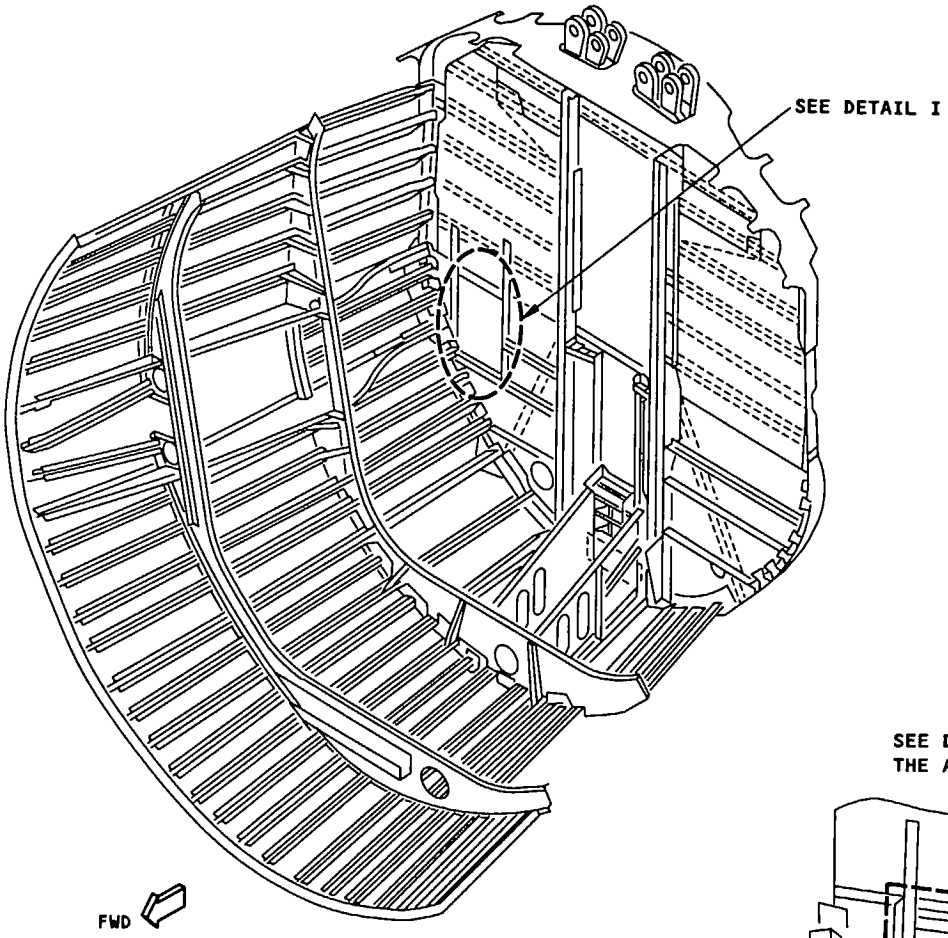

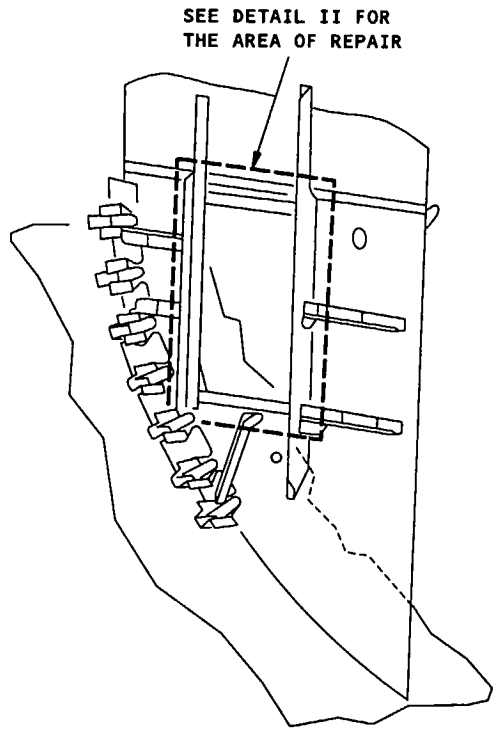

DETAIL I

STA 1088 Bulkhead Web Repair - APU Air Inlet Duct Cutout
Figure 3 (Sheet 6)

BOEING PROPRIETARY - Copyright © - Unpublished Work - See title page for details.

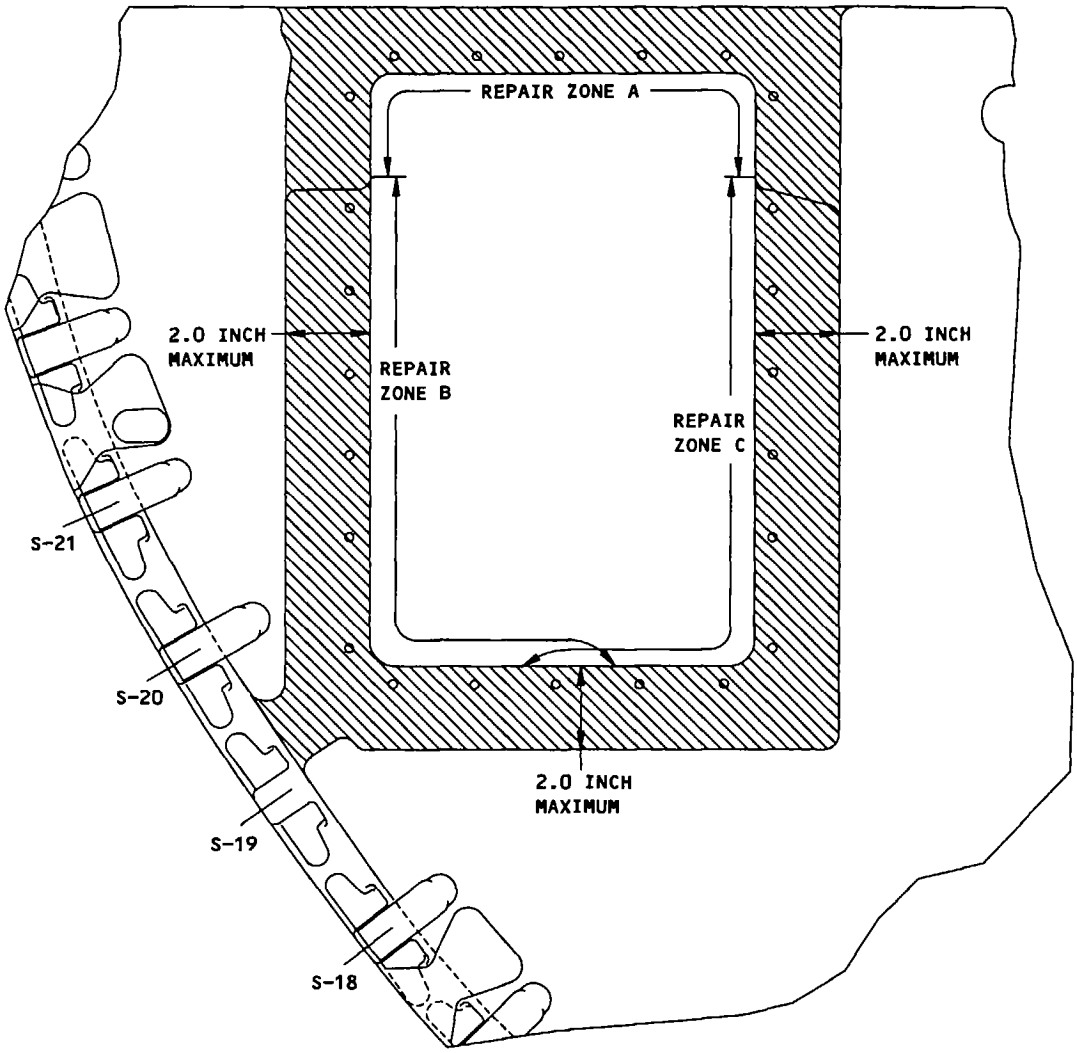

ALLOWABLE DAMAGE CUTOUT AREA [A]

VIEW LOOKING AFT

REPAIR ZONES AROUND APU AIR INLET DUCT CUTOUT
DETAIL II

STA 1088 Bulkhead Web Repair - APU Air Inlet Duct Cutout
Figure 3 (Sheet 7)

BOEING PROPRIETARY - Copyright © - Unpublished Work - See title page for details.

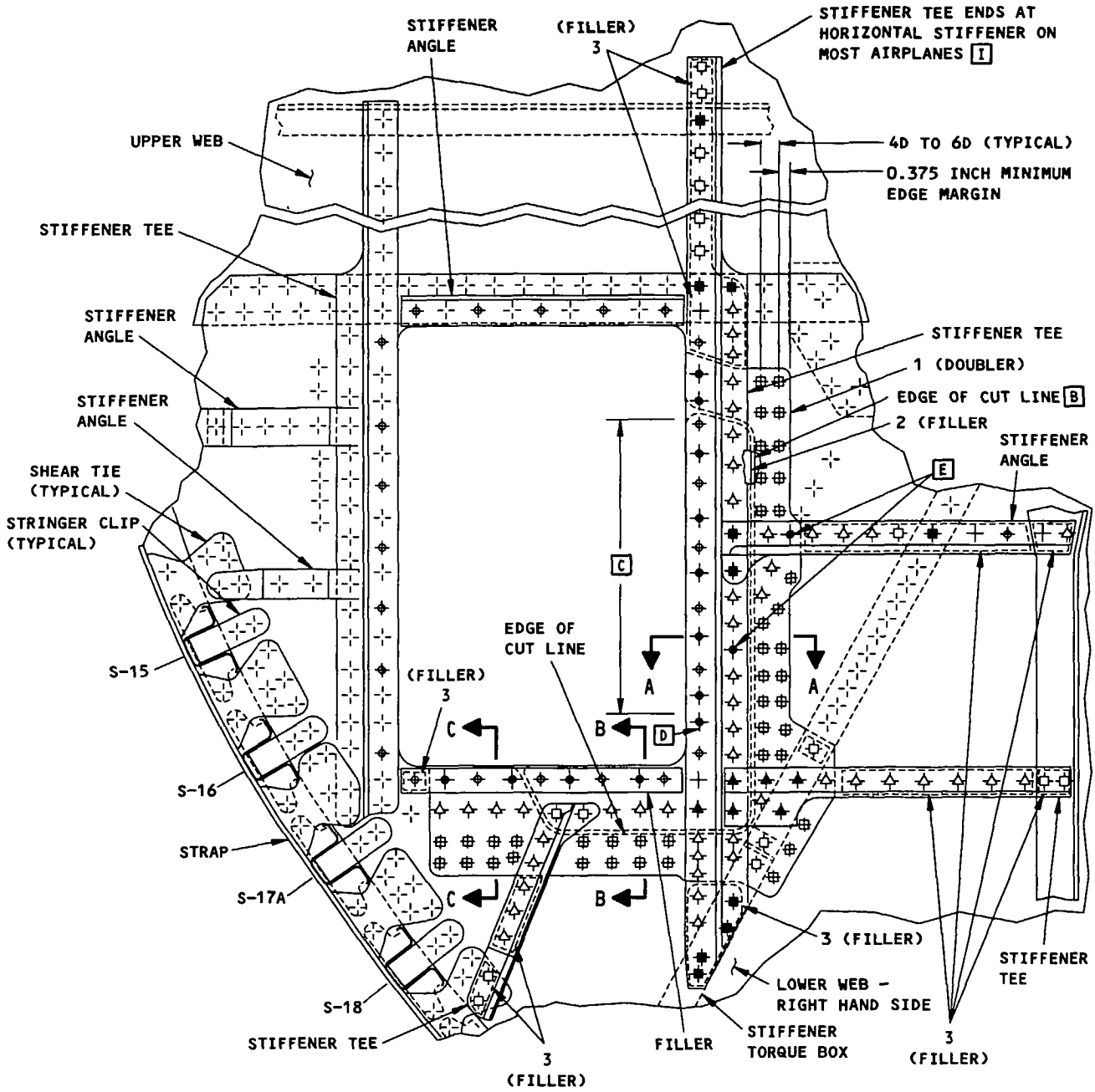

VIEW LOOKING AFT

DAMAGE REPAIR AT TWO SIDES AROUND THE LOWER RIGHT CORNER OF THE APU CUTOUT
DETAIL III

STA 1088 Bulkhead Web Repair - APU Air Inlet Duct Cutout
Figure 3 (Sheet 8)

BOEING PROPRIETARY - Copyright © - Unpublished Work - See title page for details.

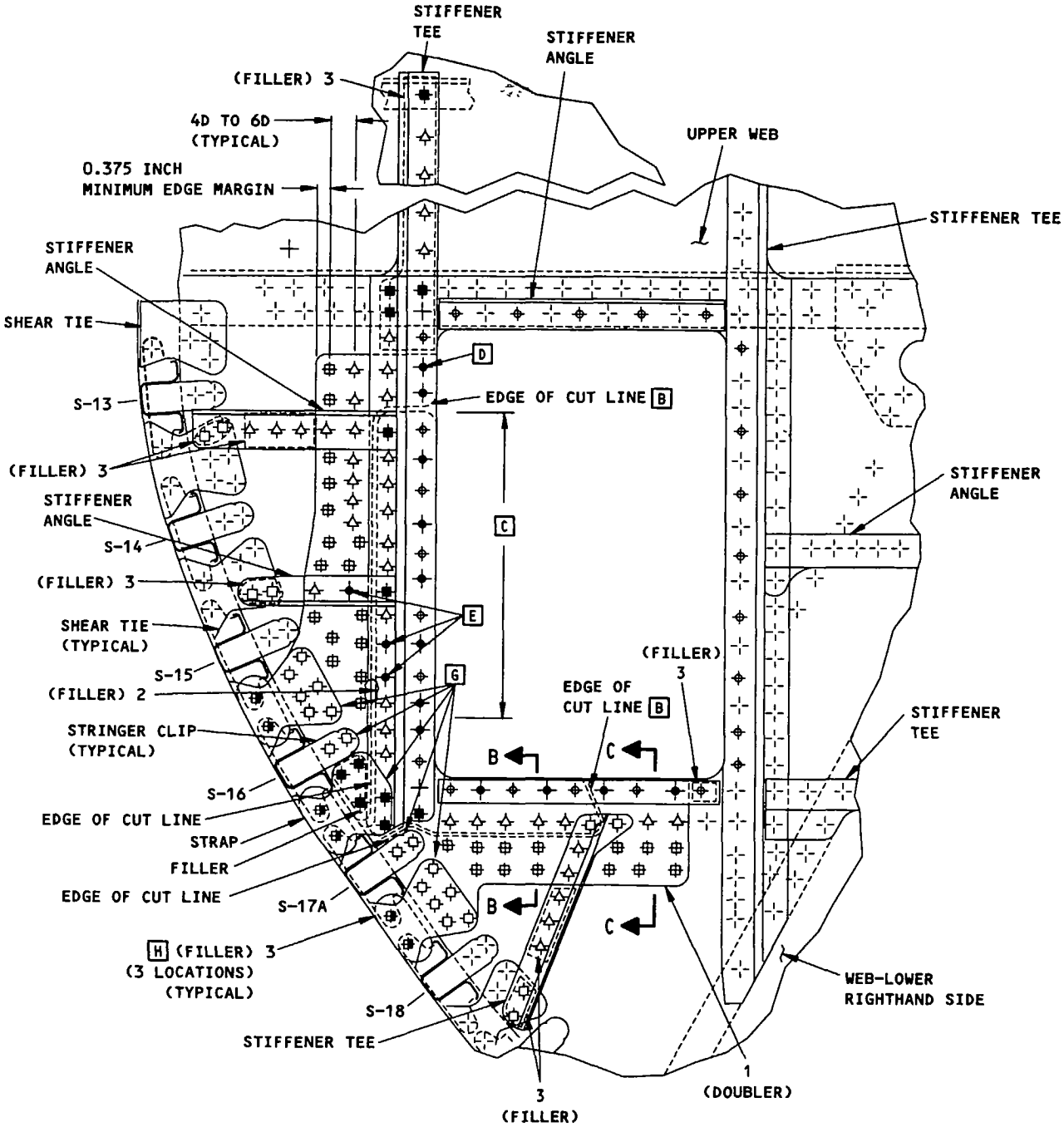

VIEW LOOKING AFT

DAMAGE REPAIR AT TWO SIDES AROUND THE LOWER LEFT CORNER
DETAIL IV

STA 1088 Bulkhead Web Repair - APU Air Inlet Duct Cutout
Figure 3 (Sheet 9)

BOEING PROPRIETARY - Copyright © - Unpublished Work - See title page for details.

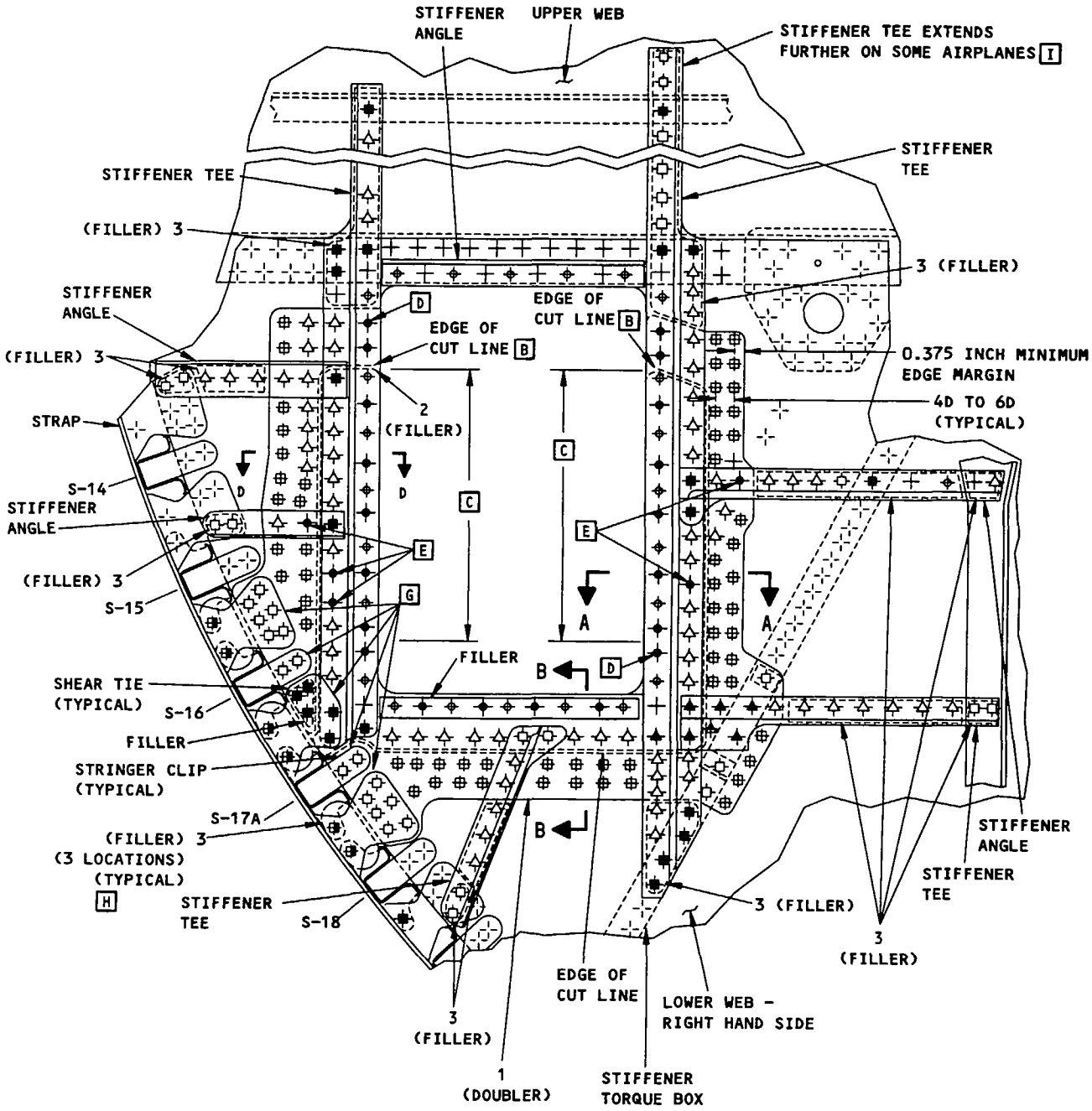

VIEW LOOKING AFT

DAMAGE REPAIR AT THREE SIDES INCLUDING BOTH LOWER CORNERS OF THE APU CUTOUT
DETAIL V

STA 1088 Bulkhead Web Repair - APU Air Inlet Duct Cutout
Figure 3 (Sheet 10)

W62713

BOEING PROPRIETARY - Copyright © - Unpublished Work - See title page for details.

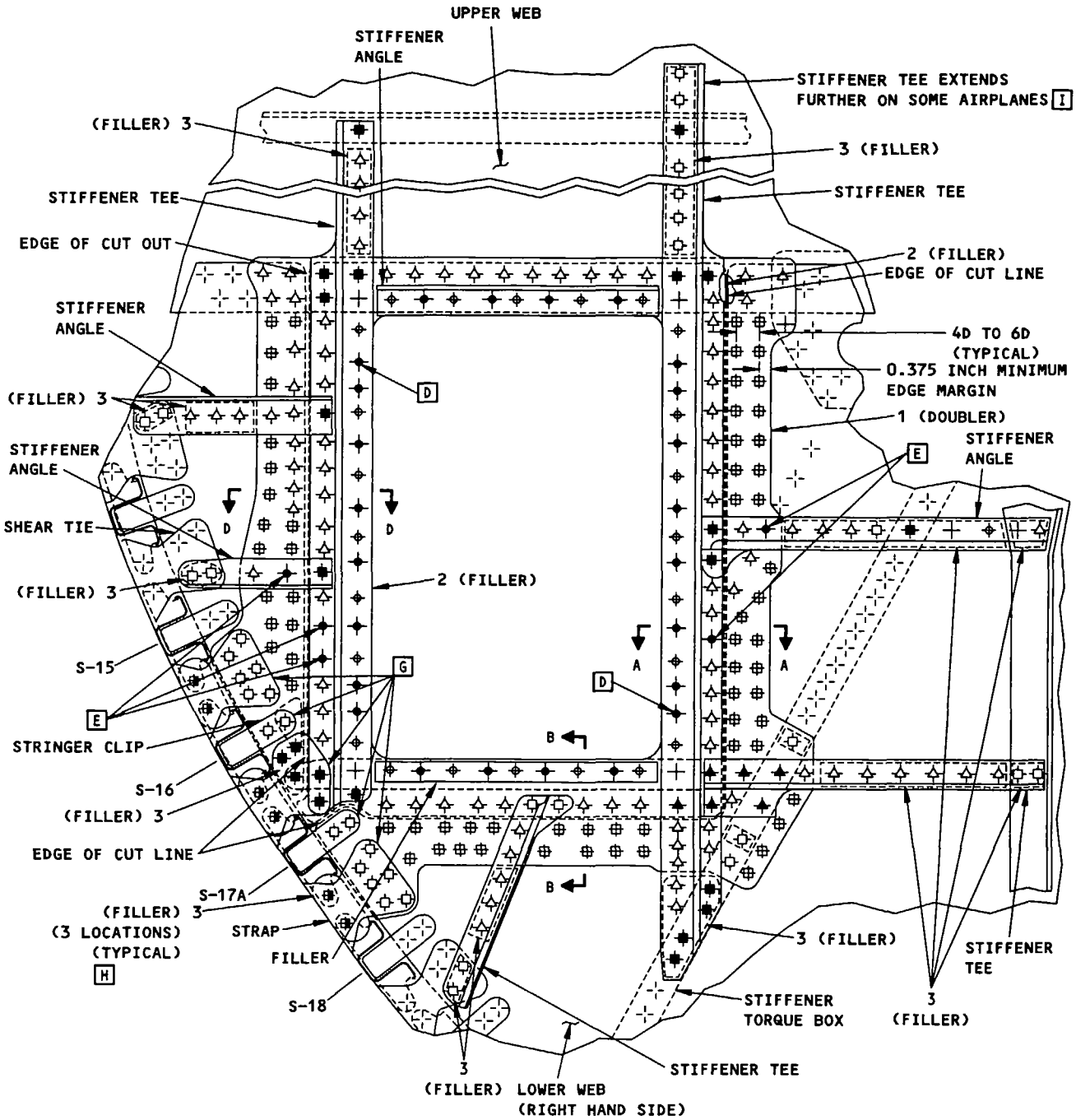

VIEW LOOKING AFT

DAMAGE REPAIR ALL THE WAY AROUND THE APU CUTOUT
DETAIL VI

STA 1088 Bulkhead Web Repair - APU Air Inlet Duct Cutout
Figure 3 (Sheet 11)

BOEING PROPRIETARY - Copyright © - Unpublished Work - See title page for details.

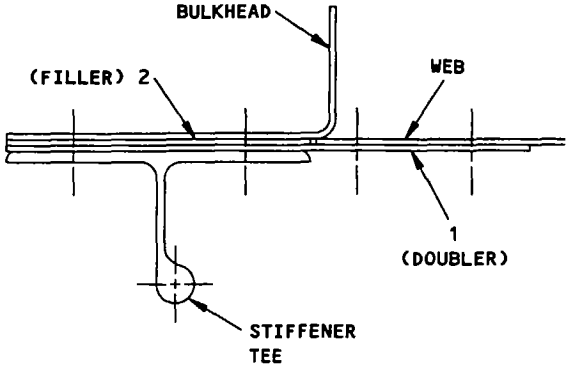

(TYPICAL)
SECTION A-A

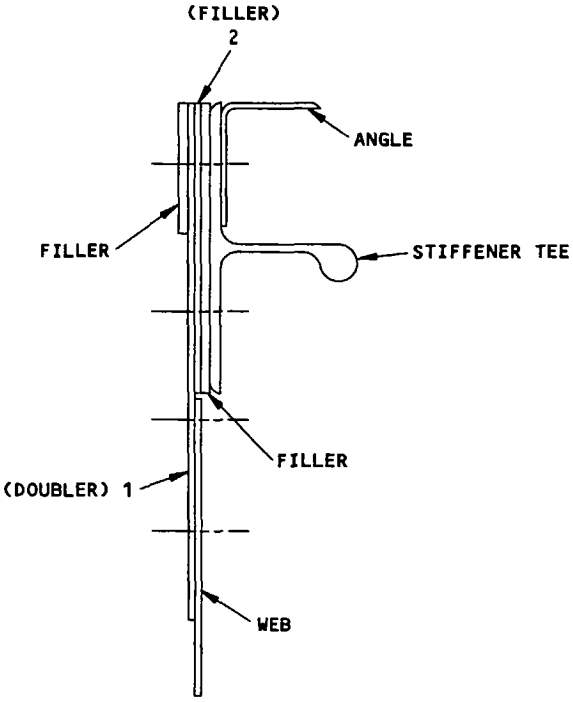

(TYPICAL)
SECTION B-B

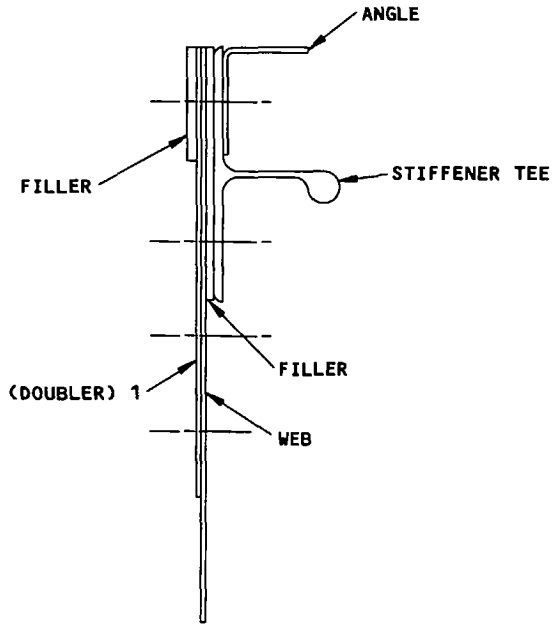

(TYPICAL)
SECTION C-C

STA 1088 Bulkhead Web Repair - APU Air Inlet Duct Cutout
Figure 3 (Sheet 12)

BOEING PROPRIETARY - Copyright © - Unpublished Work - See title page for details.

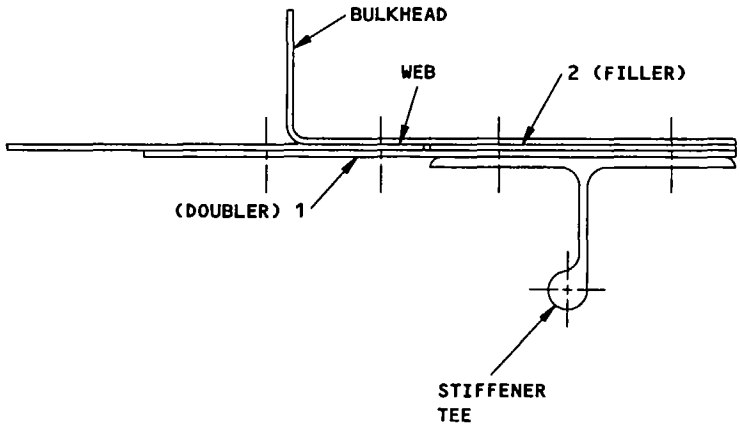

(TYPICAL)
SECTION D-D

STA 1088 Bulkhead Web Repair - APU Air Inlet Duct Cutout
Figure 3 (Sheet 13)

BOEING PROPRIETARY - Copyright © - Unpublished Work - See title page for details.

REPAIR INSTRUCTIONS

1. Cut out the damaged part of the floor panel support zee. Do not cut into any other structure near the damaged zee section.
2. Remove the floor panel nut plates.
3. Make the repair parts. See Table I.
4. Assemble the repair parts and drill the fastener holes.
5. Remove the repair parts.
6. Break the sharp edges of the support zee and the repair parts 0.015 to 0.030 inch radius.
7. Remove all nicks, scratches, burrs and sharp corners from the support zee and the repair parts.
8. Apply a chemical conversion coating to the repair parts and to the cut edges of the support zee. Refer to SRM 51-10-2.
9. Apply one coat of BMS 10-11, Type 1 primer to the repair parts and to the cut edges of the support zee. Refer to SOPM 20-41-02.
10. Install a BACN10JR3F nut plate to the underside of repair part 2 at floor panel fastener locations. Use two BACR15BA3D rivets. Install plug rivets in nutplate attach holes of the initial the structure.
11. Install the repair parts. Make a fay surface seal with BMS 5-95 sealant. Refer to SRM 51-20-4.
12. Apply the finish to the repair area. Refer to SOPM 20-41-02.

NOTES

- THIS REPAIR WILL NOT HAVE AN EFFECT ON A STRUCTURALLY SIGNIFICANT ITEM (SSI) GIVEN IN SRM 51-00-4, FIG. 3. THUS, NO CHANGE TO THE SUPPLEMENTAL STRUCTURAL INSPECTION DOCUMENT (SSID) INSPECTION PROGRAM IS NECESSARY.
- FOR REPAIRS AT A FLOOR PANEL SPLICE, REFER TO FIG. 10.
- WHEN YOU USE THIS REPAIR REFER TO:
  - SOPM 20-41-02 FOR APPLICATION OF FINISHES
  - SRM 51-10-1 FOR DAMAGE CLASSIFICATION
  - SRM 51-10-2 FOR PROTECTIVE TREATMENT OF METALLIC MATERIALS
  - SRM 51-20-4 FOR THE SEALING OF REPAIRS
  - SRM 51-30 FOR FASTENER CODE, REMOVAL, INSTALLATION, HOLE SIZES AND EDGE MARGINS
  - SRM 51-30-3 FOR FASTENER SUBSTITUTION

FASTENER SYMBOLS

- FLOOR PANEL ATTACH FASTENER LOCATION. INSTALL A BACS12ER3K10 SCREW.
- FLOOR PANEL ATTACH FASTENER LOCATION. INSTALL A BACS12ER3K10 SCREW, A BACN10JR3F NUT PLATE, AND TWO BACR15BA3D RIVETS.
- REPAIR FASTENER LOCATION. INSTALL A BACR15CE5D RIVET.
- FRAME ATTACH REPAIR FASTENER LOCATION. INSTALL A MS20470D6 RIVET.
- REPAIR FASTENER LOCATION. INSTALL A BACR15FT5D RIVET.
- REPAIR FASTENER LOCATION. INSTALL A BACR15FT6D RIVET.

REPAIR MATERIALS			
PART		QTY	MATERIAL
1	REPAIR ZEE	1	CLAD 7075-T6 BAC1496-377
2	SPLICE ZEE	2	CLAD 7075-T6 BAC1496-377

TABLE I

Section 46 Cargo Compartment Floor Panel Support Zee Repair
Figure 1 (Sheet 1)

BOEING PROPRIETARY - Copyright © - Unpublished Work - See title page for details.

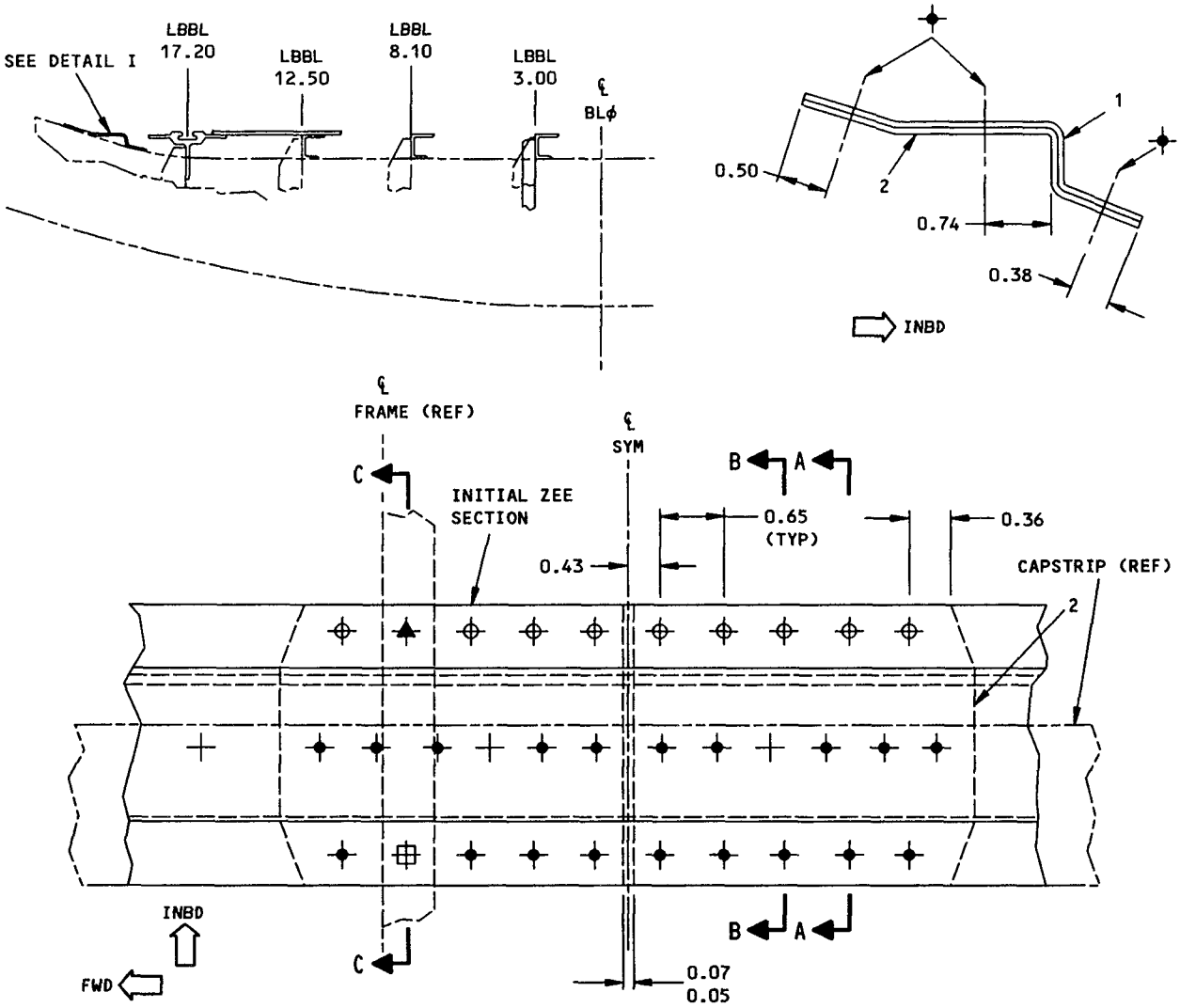

LEFT SIDE IS SHOWN, RIGHT SIDE IS ALMOST THE SAME
DETAIL I

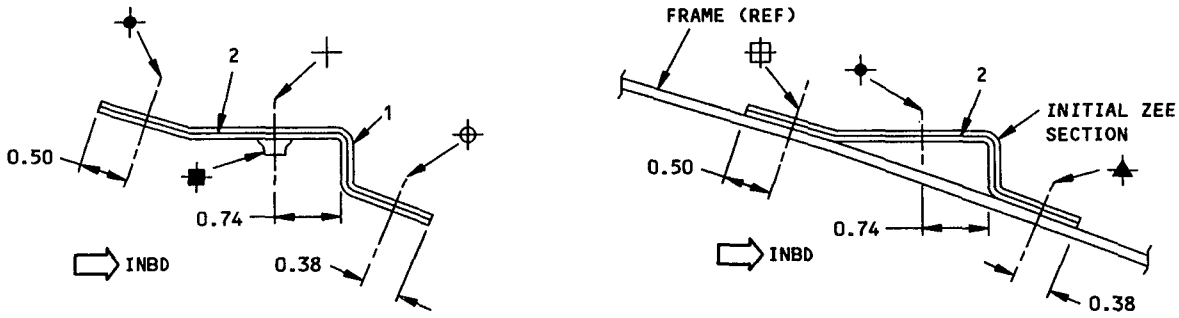

SECTION B-B

SECTION C-C

Section 46 Cargo Compartment Floor Panel Support Zee Repair
Figure 1 (Sheet 2)

REPAIR INSTRUCTIONS

1. Cut out the damaged part of the floor panel support zee. Do not cut into any other structure near the damaged zee section.
2. Remove the floor panel nut plates.
3. Make the repair parts. Refer to Table I.
4. Assemble the repair parts and drill the fastener holes.
5. Remove the repair parts.
6. Remove all nicks, scratches, burrs and sharp corners from the support zee and the repair parts.
7. Apply a chemical conversion coating to the repair parts and to the cut edges of the support zee. Refer to SRM 51-10-2.
8. Apply one coat of BMS 10-11, Type 1 primer to the repair parts and to the cut edges of the support zee. Refer to SOPM 20-41-02.
9. Install a BACN10JR3F nut plate to the underside of repair part 2 at floor panel fastener locations. Use two BACR15BA3D rivets. Install plug rivets in the nutplate attach holes of the initial structure.
10. Install the repair parts. Make a fay surface seal with BMS 5-95 sealant. Refer to SRM 51-20-4.
11. Apply the finish to the repair area. Refer to SOPM 20-41-02.

NOTES

- THIS REPAIR WILL NOT HAVE AN EFFECT ON A STRUCTURALLY SIGNIFICANT ITEM (SSI) GIVEN IN SRM 51-00-4, FIG. 3. THUS, NO CHANGE TO THE SUPPLEMENTAL STRUCTURAL INSPECTION DOCUMENT (SSID) INSPECTION PROGRAM IS NECESSARY.
- WHEN YOU USE THIS REPAIR REFER TO:
  - SOPM 20-41-02 FOR THE APPLICATION OF CORROSION RESISTANT PRIMER
  - SRM 51-10-1 FOR DAMAGE CLASSIFICATION
  - SRM 51-10-2 FOR PROTECTIVE TREATMENT OF METALLIC MATERIALS
  - SRM 51-20-4 FOR THE SEALING OF REPAIRS
  - SRM 51-30 FOR FASTENER CODE, REMOVAL, INSTALLATION, HOLES SIZES AND EDGE MARGINS

    SRM 51-30-3 FOR FASTENER SUBSTITUTION.

FASTENER SYMBOLS

+ FLOOR PANEL ATTACH FASTENER LOCATION. INSTALL A BACS12ER3K10 SCREW, A BACN10JR3F NUT PLATE, AND TWO BACR15BA3D RIVETS.

REPAIR FASTENER LOCATION. INSTALL A BACR15FT5D RIVET.

REPAIR FASTENER LOCATION. INSTALL A BACR15CE5D RIVET IN THE INITIAL FLOOR PANEL SUPPORT ZEE OR REPAIR SUPPORT ZEE.

REPAIR MATERIALS			
PART		QTY	MATERIAL
1	REPAIR ZEE	1	CLAD 7075-T6 BAC1496-377
2	SPLICE ZEE	2	CLAD 7075-T6 BAC1496-377

TABLE I

Section 46 Cargo Compartment Floor Panel
Support Zee Repair at a Floor Panel Splice
Figure 2 (Sheet 1)

BOEING PROPRIETARY - Copyright © - Unpublished Work - See title page for details.

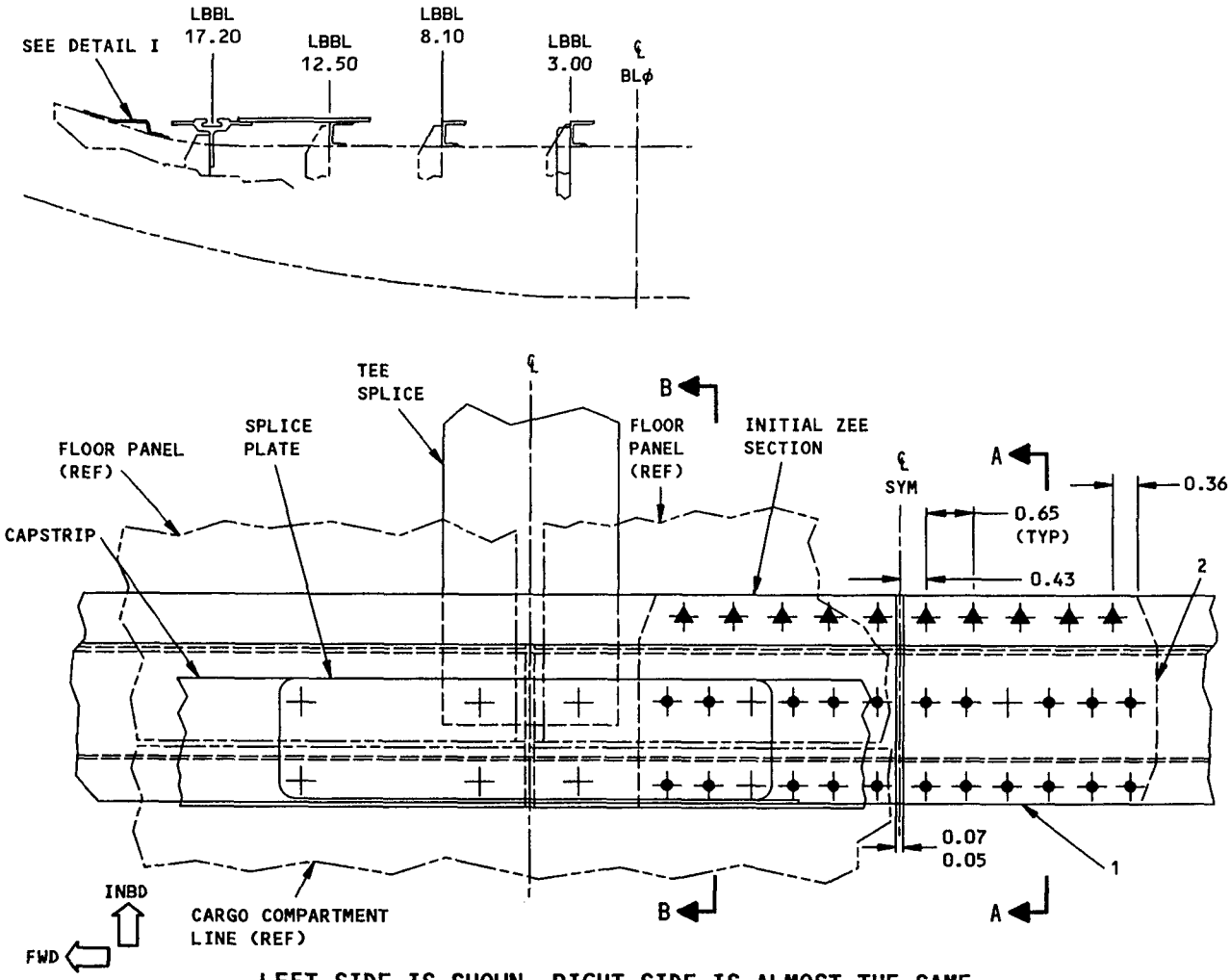

LEFT SIDE IS SHOWN, RIGHT SIDE IS ALMOST THE SAME
DETAIL I

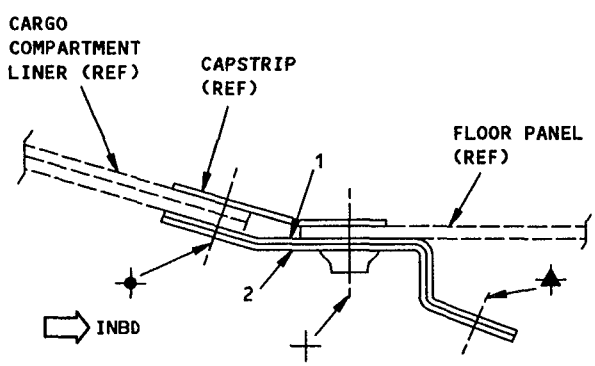

SECTION A-A

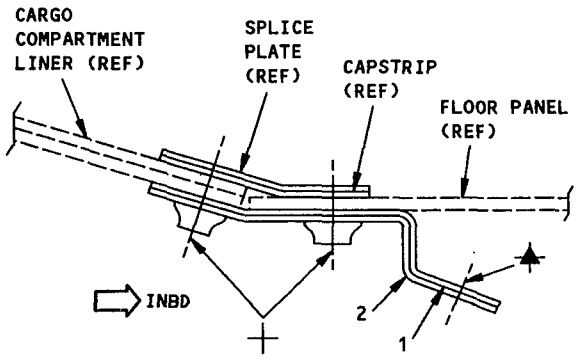

SECTION B-B

Section 46 Cargo Compartment Floor Panel
Support Zee Repair at a Floor Panel Splice
Figure 2 (Sheet 2)

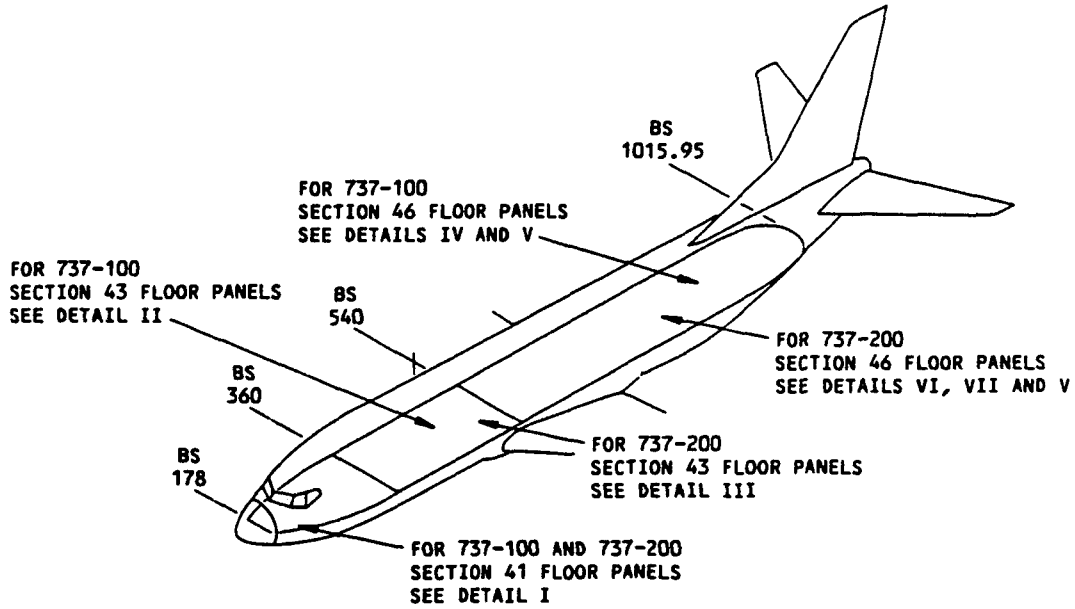

NOTES

- A TYPICAL FLOOR PANEL CONFIGURATION IS SHOWN TO DEPICT FLOOR PANEL CONSTRUCTION FOR SPECIFIC AREA USAGES (GALLEY, LAVATORY, DOOR ENTRY) AND TRAFFIC REQUIREMENTS
- FLOOR PANEL CONFIGURATION VARIES AS AN OPERATOR OPTION. FOR SPECIFIC FLOOR PANEL CONFIGURATION REFER TO BOEING DRAWING 65-51268 FOR SECTION 41, 65-46819 FOR SECTION 43, AND 65-46820 FOR SECTION 46
- THE FOLLOWING GROUND RULES HAVE BEEN USED FOR THE SELECTION OF FLOOR PANELS IN DESIGN. THE FLOOR PANEL ARRANGEMENT AND MATERIAL SELECTION, HOWEVER, REMAIN AS OPERATOR OPTIONS:
  1. FIBERGLASS FACED NOMEX CORE PANELS TO BE USED IN POTENTIALLY MOIST AREAS (UNDER GALLEYS AND LAVATORIES, DOOR ENTRY AREAS, ETC.)
  2. MEDIUM DENSITY HONEYCOMB CORE SANDWICH PANELS TO BE USED IN LOW TRAFFIC AREAS (UNDER SEATS)
  3. HIGH DENSITY AND DUAL DENSITY HONEYCOMB CORE-SANDWICH PANELS USED FOR HIGH TRAFFIC AND HIGH LOAD AREAS (AISLE, GALLEY, DOOR ENTRY AND FOOD CART STORAGE AREAS)

[A] ALUMINUM COVERED BALSA SANDWICH PER BMS 4-10

[B] FIBERGLASS FACED BALSA SANDWICH PER BMS 4-10

[C] ALUMINUM COVERED PVC PLASTIC FOAM SANDWICH PER BMS 4-13

[D] FIBERGLASS FACED PVC PLASTIC FOAM SANDWICH PER BMS 4-13

[E] FIBERGLASS FACED NOMEX HONEYCOMB CORE PER BMS 4-17

[F] FIBERGLASS FACED NOMEX HONEYCOMB CORE PER 69B15779

[G] FIBERGLASS FACED NOMEX HONEYCOMB CORE PER 69-68749

[H] FIBERGLASS FACED NOMEX HONEYCOMB CORE PER 69B15778

[I] ALUMINUM PANEL ASSY: WEB, STRAP AND CORRUGATED ALUMINUM PER 65-51286

Main Deck Floor Panel Identification - Passenger Airplanes
Figure 1 (Sheet 1)

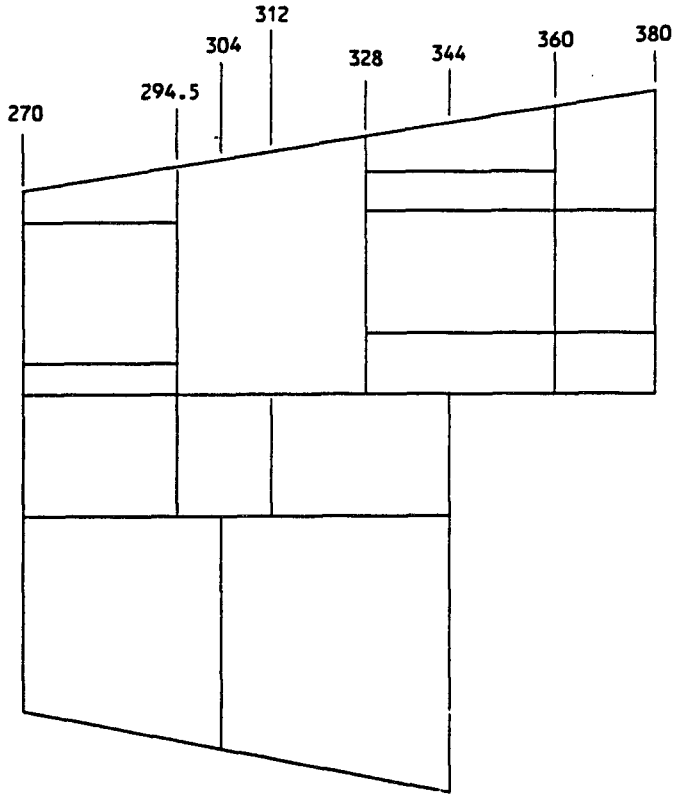

737-100, 737-200 SECTION 41 PLAN VIEW
DETAIL I

PANEL LOCATION	PANEL FACESHEET AND CORE COMPOSITION		
	SINGLE DENSITY CORE		DUAL DENSITY CORE
	MEDIUM	HIGH	MEDIUM AND HIGH
UNDER SEATS	E F G C	B D	
DOOR ENTRY AREAS	A C	B E F D	
GALLEY AND LAVATORY AREAS	E F G C	B D	
AISLE AND TRAFFIC AREAS	A C H	E F	

SECTION 41
TYPICAL FLOOR PANEL COMPOSITION AND CORRESPONDING LOCATION
TABLE I

Main Deck Floor Panel Identification - Passenger Airplanes
Figure 1 (Sheet 2)

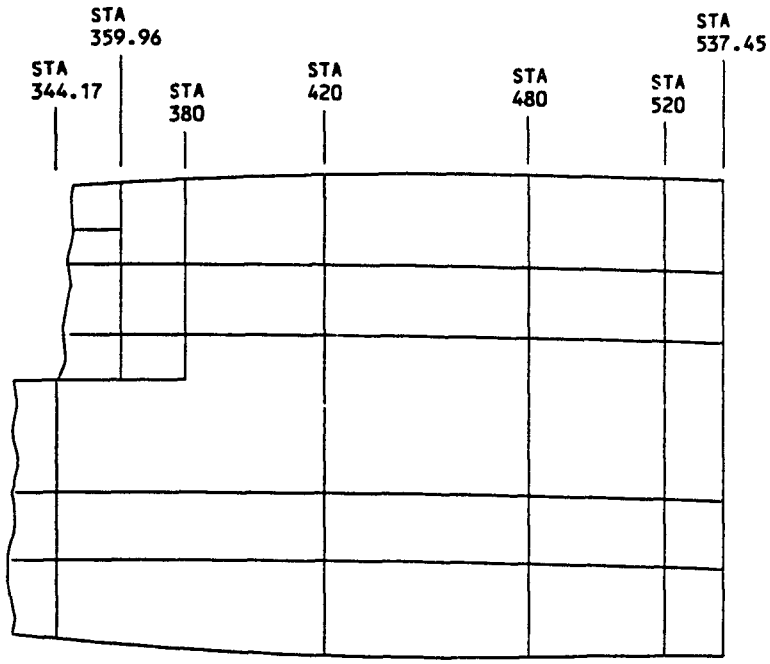

737-100 SECTION 43 PLAN VIEW
DETAIL II

PANEL LOCATION	PANEL FACESHEET AND CORE COMPOSITION			CORRUGATED ALUMINUM CONSTRUCTION
	SINGLE DENSITY CORE		DUAL DENSITY CORE	
	MEDIUM	HIGH	MEDIUM AND HIGH	
UNDER SEATS	C H			I
AISLE AND TRAFFIC AREAS	A C			

737-100 SECTION 43
TYPICAL FLOOR PANEL COMPOSITION AND CORRESPONDING LOCATION
TABLE II

Main Deck Floor Panel Identification - Passenger Airplanes
Figure 1 (Sheet 3)

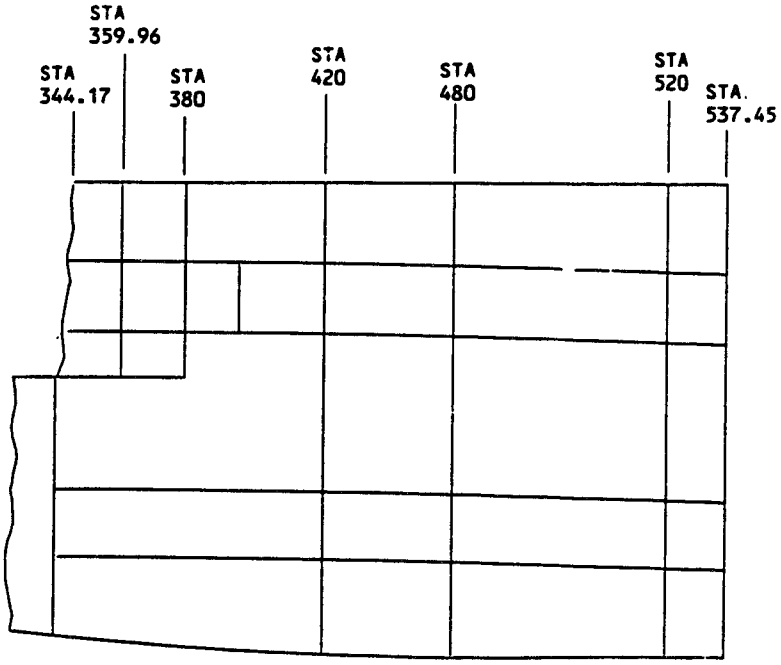

737-200 SECTION 43 PLAN VIEW
DETAIL III

PANEL LOCATION	PANEL FACESHEET AND CORE COMPOSITION			CORRUGATED ALUMINUM CONSTRUCTION
	SINGLE DENSITY CORE		DUAL DENSITY CORE	
	MEDIUM	HIGH	MEDIUM AND HIGH	
UNDER SEATS	H C E F G	E		I
AISLE AND TRAFFIC AREAS	A C	E F	E	

737-200 SECTION 43
TYPICAL FLOOR PANEL COMPOSITION AND CORRESPONDING LOCATION
TABLE III

Main Deck Floor Panel Identification - Passenger Airplanes
Figure 1 (Sheet 4)

300880

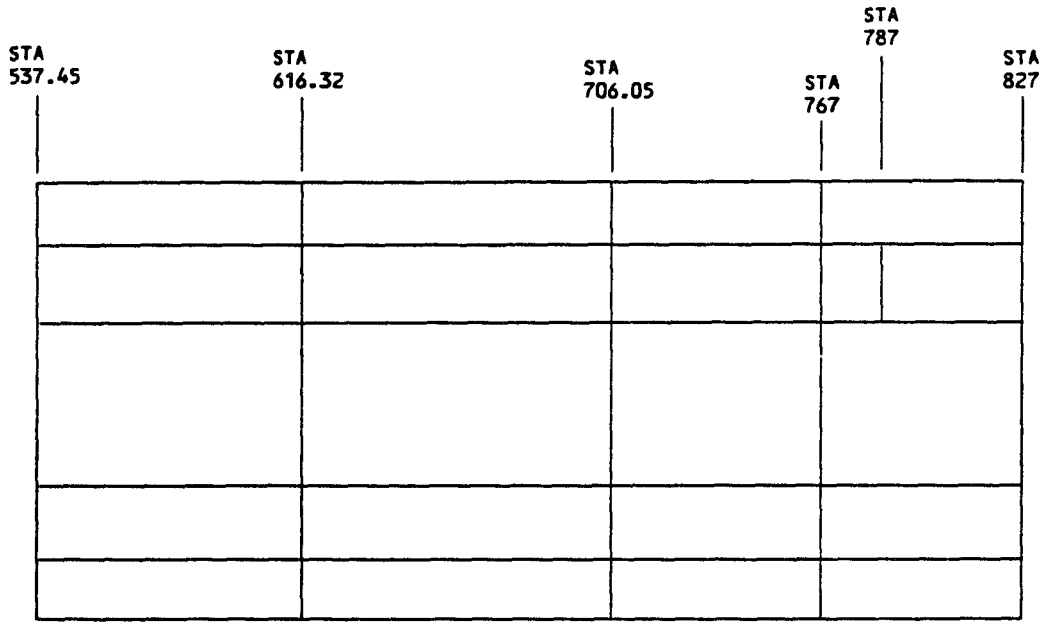

737-100 SECTION 46 (STA 537.45-STA 827) PLAN VIEW
DETAIL IV

PANEL LOCATION	PANEL FACESHEET AND CORE COMPOSITION			CORRUGATED ALUMINUM CONSTRUCTION
	SINGLE DENSITY CORE		DUAL DENSITY CORE	
	MEDIUM	HIGH	MEDIUM AND HIGH	
UNDER SEATS	C H			I
AISLE AND TRAFFIC AREAS	A C			

737-100 SECTION 46 (STA 537.45-STA 827)
TYPICAL FLOOR PANEL COMPOSITION AND CORRESPONDING LOCATION
TABLE IV

Main Deck Floor Panel Identification - Passenger Airplanes
Figure 1 (Sheet 5)

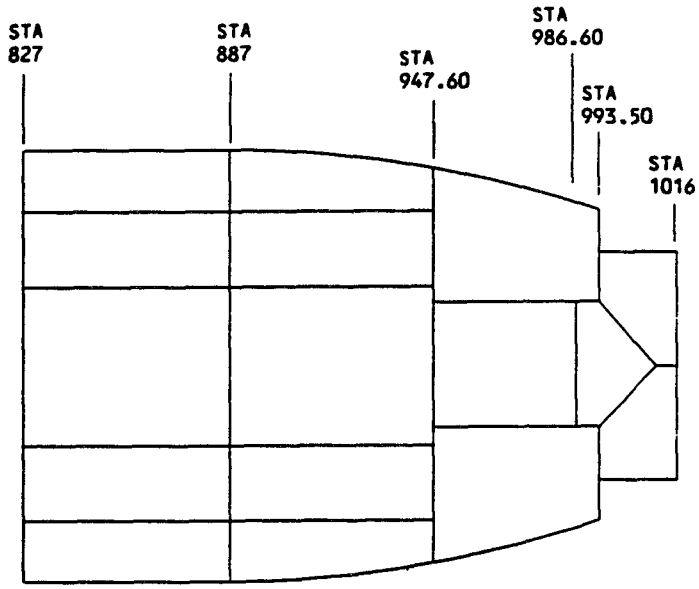

737-100 SECTION 46 (STA 827-STA 1016) PLAN VIEW
DETAIL V

PANEL LOCATION	PANEL FACESHEET AND CORE COMPOSITION			CORRUGATED ALUMINUM CONSTRUCTION
	SINGLE DENSITY CORE		DUAL DENSITY CORE	
	MEDIUM	HIGH	MEDIUM AND HIGH	
UNDER SEATS	A C H			I
DOOR ENTRY AREAS	A C			
GALLEY AND LAVATORY AREAS	A C	B D		
AISLE AND TRAFFIC AREAS	A C			

737-100 SECTION 46 (STA 827-STA 1016)
TYPICAL FLOOR PANEL COMPOSITION AND CORRESPONDING LOCATION
TABLE V

Main Deck Floor Panel Identification - Passenger Airplanes
Figure 1 (Sheet 6)

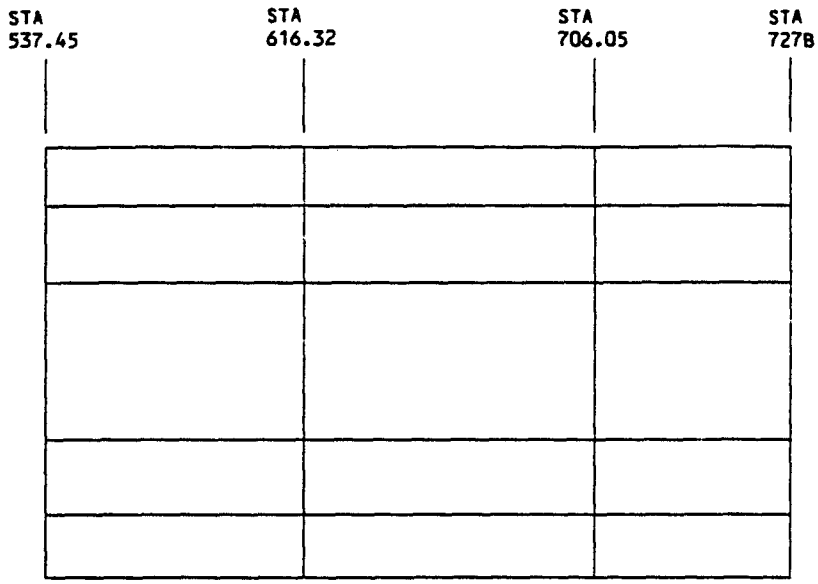

737-200 SECTION 46 (STA 537.45-STA 727B) PLAN VIEW
DETAIL VI

PANEL LOCATION	PANEL FACESHEET AND CORE COMPOSITION			CORRUGATED ALUMINUM CONSTRUCTION
	SINGLE DENSITY CORE		DUAL DENSITY CORE	
	MEDIUM	HIGH	MEDIUM AND HIGH	
UNDER SEATS	C E F G H	E		I
AISLE AND TRAFFIC AREAS	A C	E F	E	

737-200 SECTION 46 (STA 537.45-STA 727B)
TYPICAL FLOOR PANEL COMPOSITION AND CORRESPONDING LOCATION
TABLE VI

Main Deck Floor Panel Identification - Passenger Airplanes
Figure 1 (Sheet 7)

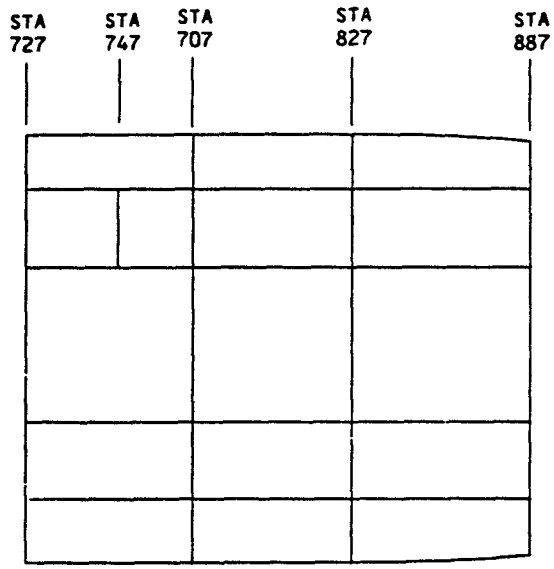

737-200 SECTION 46 (STA 727-STA 887) PLAN VIEW
DETAIL VII

PANEL LOCATION	PANEL FACESHEET AND CORE COMPOSITION			CORRUGATED ALUMINUM CONSTRUCTION
	SINGLE DENSITY CORE		DUAL DENSITY CORE	
	MEDIUM	HIGH	MEDIUM AND HIGH	
UNDER SEATS	C E F G H	E		I
AISLE AND TRAFFIC AREAS	A C	E F	E	

737-200 SECTION 46 (STA 727-STA 887)
TYPICAL FLOOR PANEL COMPOSITION AND CORRESPONDING LOCATION
TABLE VII

Main Deck Floor Panel Identification - Passenger Airplanes
Figure 1 (Sheet 8)

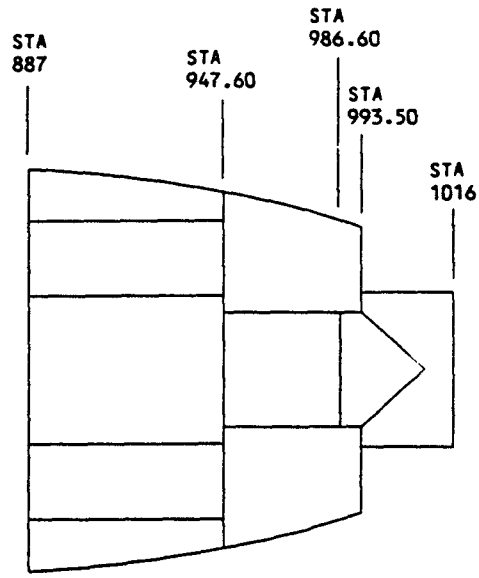

737-200 SECTION 46 (STA 887-STA 1016) PLAN VIEW
DETAIL VIII

PANEL LOCATION	PANEL FACESHEET AND CORE COMPOSITION			CORRUGATED ALUMINUM CONSTRUCTION
	SINGLE DENSITY CORE		DUAL DENSITY CORE	
	MEDIUM	HIGH	MEDIUM AND HIGH	
UNDER SEATS	A E F G H			I
DOOR ENTRY AREAS	A C	D E F G		
GALLEY AND LAVATORY AREAS	A C	B D E F G		
AISLE AND TRAFFIC AREAS	A C	E F	E	

737-200 SECTION 46 (STA 887-STA 1016)
TYPICAL FLOOR PANEL COMPOSITION AND CORRESPONDING LOCATION
TABLE VIII

Main Deck Floor Panel Identification - Passenger Airplanes
Figure 1 (Sheet 9)

ITEM	MATERIAL	REPAIR FIG. NO.
1	0.063 CLAD 2024-T4	
2	0.032 CLAD 2024-T4	
3	0.050 CLAD 2024-T4	
4	PLASTIC GLASS FABRIC EPOXY SANDWICH PER BAC5470	51-40-9
5	AND10138-0703 2024-T3511	
6	0.040 CLAD 7075-T6	
7	BAC1518-418 7075-T6511	
8	BAC1519-122 7075-T6511	
9	0.063 CLAD 7075-T6	
10	AND10134-1204 2024-T3511	

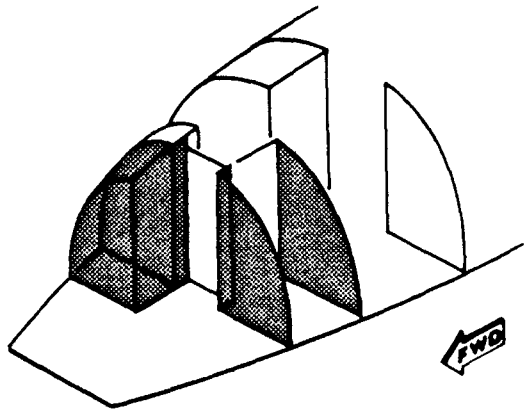

Partition Structure Identification
Figure 2 (Sheet 1)

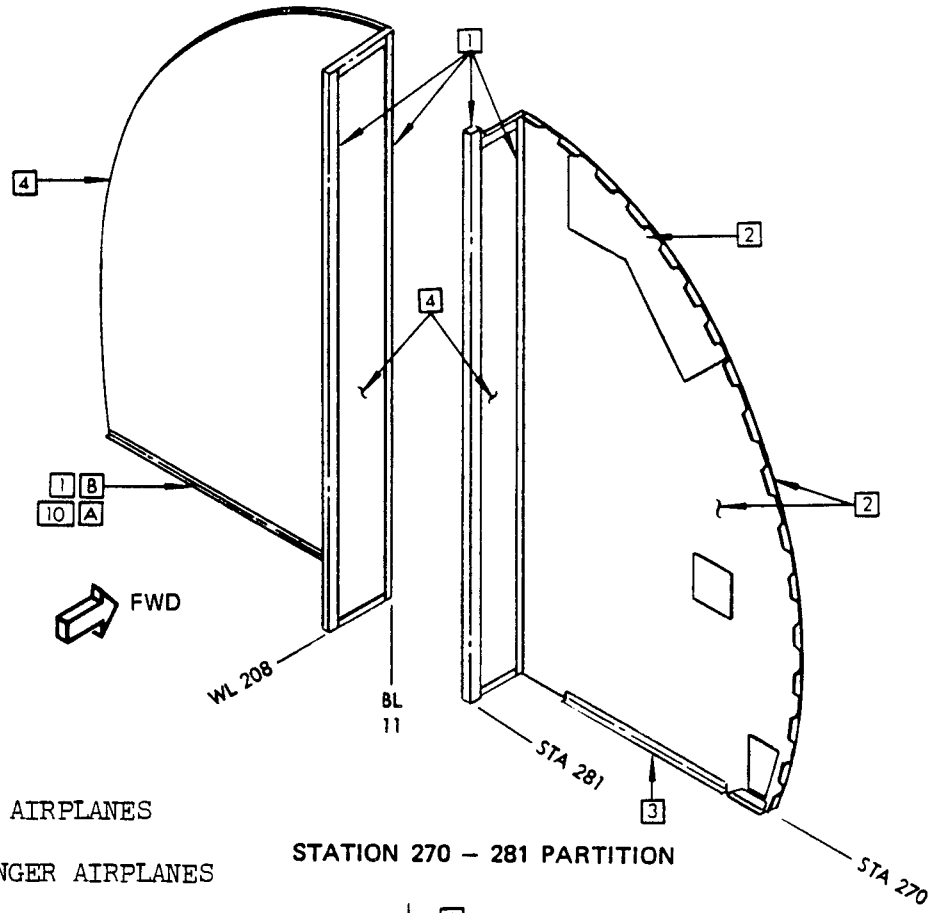

NOTES

A FOR CARGO AIRPLANES

B FOR PASSENGER AIRPLANES

STATION 270 – 281 PARTITION

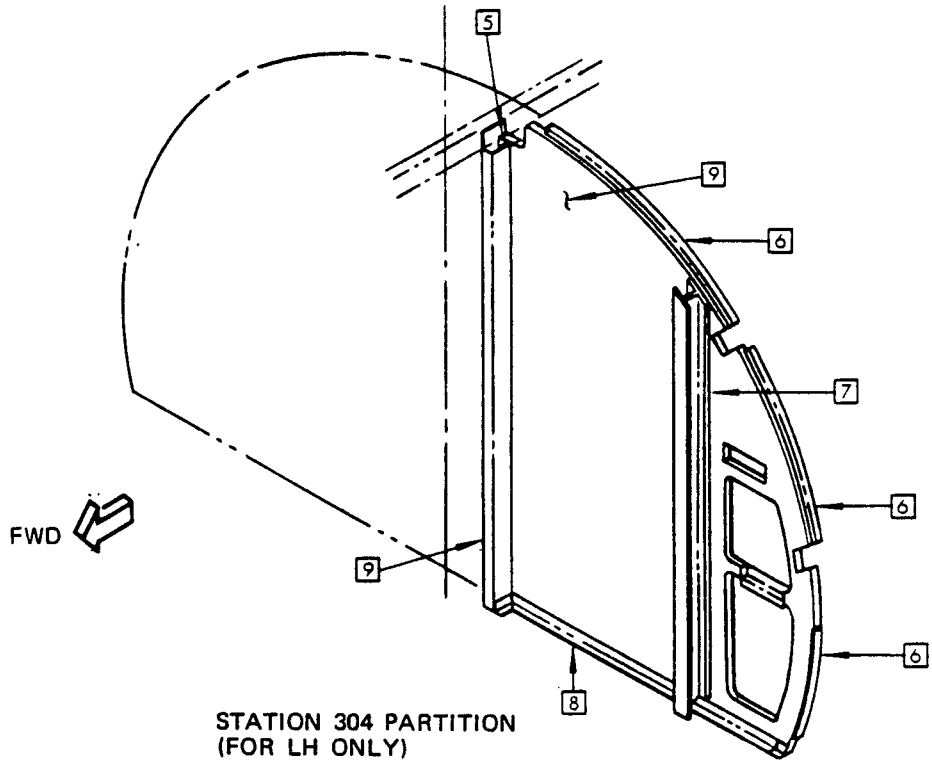

STATION 304 PARTITION
(FOR LH ONLY)

Partition Structure Identification
Figure 2 (Sheet 2)

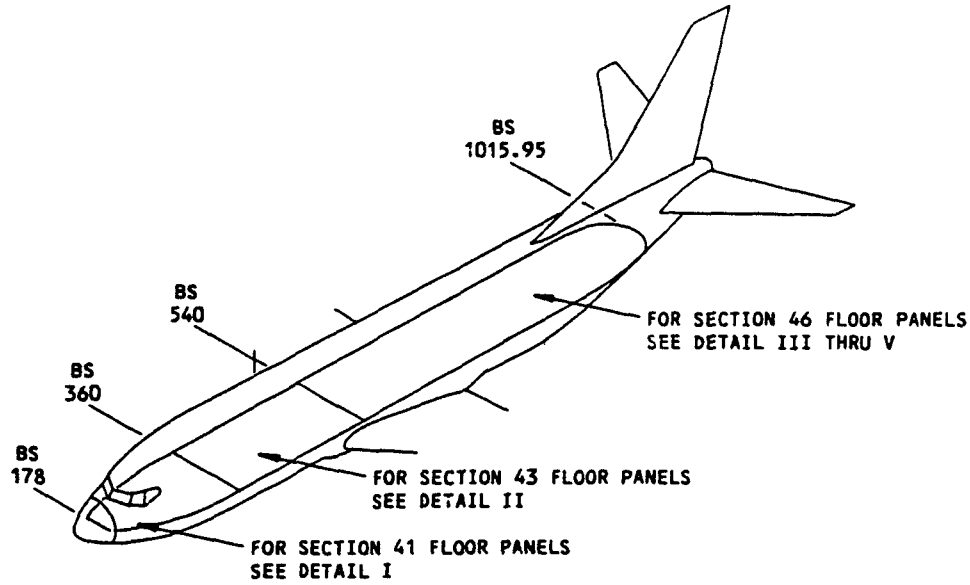

NOTES

- A TYPICAL FLOOR PANEL CONFIGURATION IS SHOWN TO DEPICT FLOOR PANEL CONSTRUCTION FOR SPECIFIC AREA USAGES (GALLEY, LAVATORY, DOOR ENTRY) AND TRAFFIC REQUIREMENTS
- FLOOR PANEL CONFIGURATION VARIES AS AN OPERATOR OPTION. FOR SPECIFIC FLOOR PANEL CONFIGURATION REFER TO BOEING DRAWING 65-62190 FOR SECTION 41, 65-62119 FOR SECTION 43, AND 65-54887 FOR SECTION 46
- THE FOLLOWING GUIDELINES HAVE BEEN USED FOR THE SELECTION OF FLOOR PANELS IN DESIGN. THE FLOOR PANEL ARRANGEMENT AND MATERIAL SELECTION, HOWEVER, REMAIN AS OPERATOR OPTIONS:

  1. FIBERGLASS FACED NOMEX CORE PANELS TO BE USED IN POTENTIALLY MOIST AREAS (UNDER GALLEYS AND LAVATORIES, DOOR ENTRY AREAS, ETC.)
  2. MEDIUM DENSITY HONEYCOMB CORE SANDWICH PANELS TO BE USED IN LOW TRAFFIC AREAS
  3. HIGH DENSITY HONEYCOMB CORE-SANDWICH PANELS USED FOR HIGH TRAFFIC AND HIGH HIGH LOAD AREAS (AISLE, GALLEY AND DOOR ENTRY AREAS)
  4. ALUMINUM FACED CORRUGATED ALUMINUM TO BE USED ON THE MAIN CARGO DECK AREA

[A] ALUMINUM FACED CORRUGATED ALUMINUM

[B] ALUMINUM FACED PVC PLASTIC FOAM PER BMS 4-13

[C] FIBERGLASS FACED PVC PLASTIC FOAM PER BMS 4-13

[D] ALUMINUM FACED BALSA SANDWICH PER BMS 4-10

[E] FIBERGLASS FACED BALSA SANDWICH PER BMS 4-10

[F] FIBERGLASS FACED NOMEX CORE PER BMS 4-17

[G] FIBERGLASS FACED NOMEX CORE PER 69B15779

[H] ALUMINUM FACED NOMEX CORE PER 69B15728

[I] ALUMINUM FACED NOMEX PER 69B15778

[J] FIBERGLASS FACED NOMEX PER 69-68749

Main Deck Floor Panel Identification - Cargo Airplanes
Figure 3 (Sheet 1)

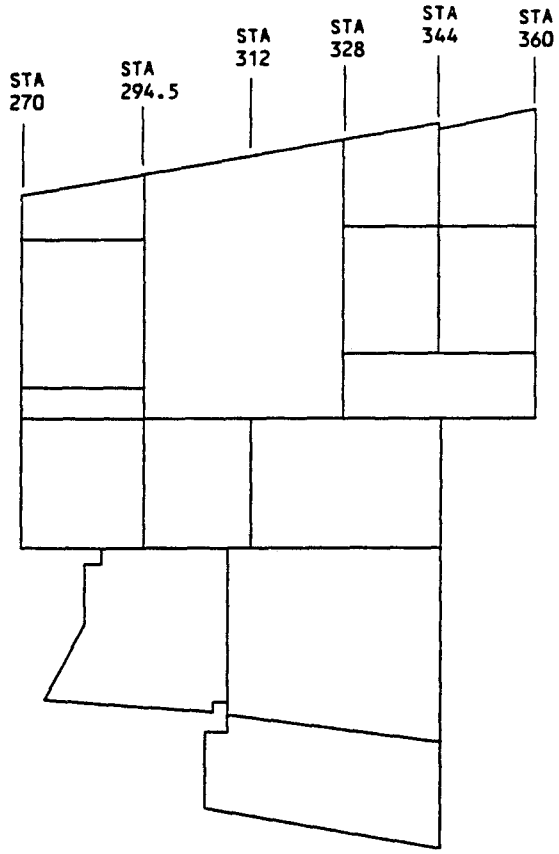

737-200 CARGO SECTION 41 (STA 270-STA 360) PLAN VIEW
DETAIL I

PANEL LOCATION	PANEL FACESHEET AND CORE COMPOSITION		CORRUGATED ALUMINUM CONSTRUCTION
	SINGLE DENSITY CORE		
	MEDIUM	HIGH	
DOOR ENTRY AREAS	B H D	F G C D	
GALLEY AND LAVATORY AREAS		E C D F G	A
AISLE AND TRAFFIC AREAS	D I B	F G	

737-200 CARGO SECTION 41 (STA 270-STA 360)
TYPICAL FLOOR PANEL COMPOSITION AND CORRESPONDING LOCATION
TABLE I

Main Deck Floor Panel Identification - Cargo Airplanes
Figure 3 (Sheet 2)

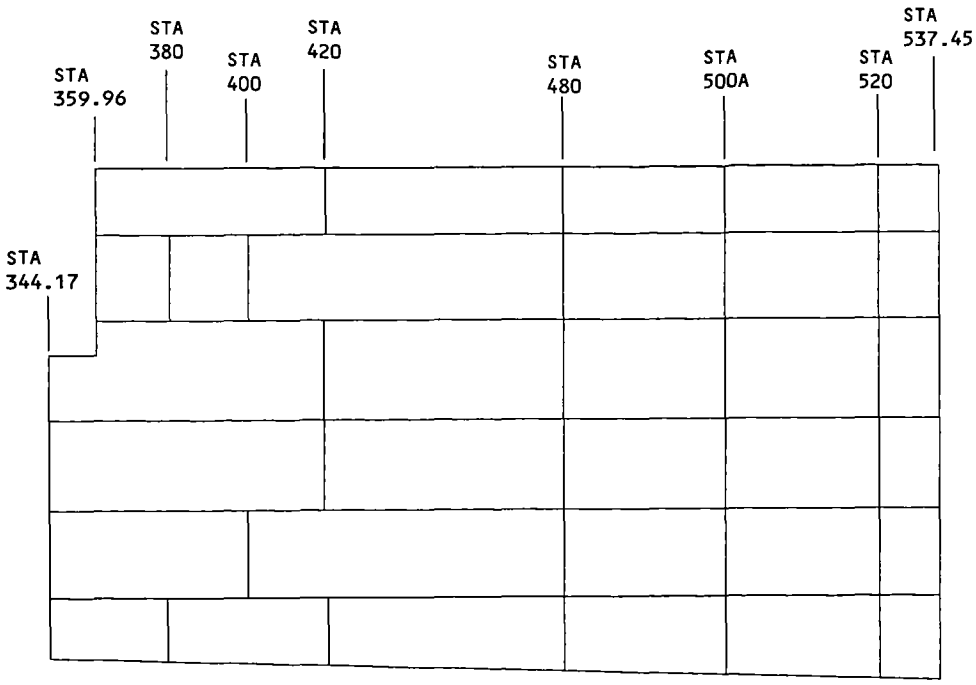

737-200 CARGO SECTION 43 (STA 344.17-STA 537.45) FLOOR PLAN
DETAIL II

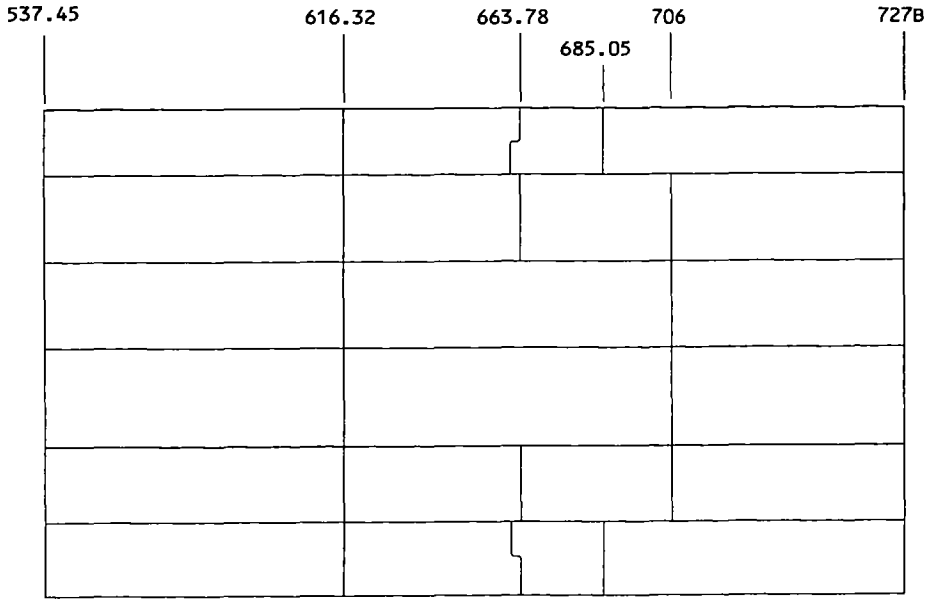

737-200 CARGO SECTION 46 (STA 540-STA 727B) PLAN VIEW
DETAIL III

Main Deck Floor Panel Identification - Cargo Airplanes
Figure 3 (Sheet 3)

BOEING PROPRIETARY - Copyright © - Unpublished Work - See title page for details.

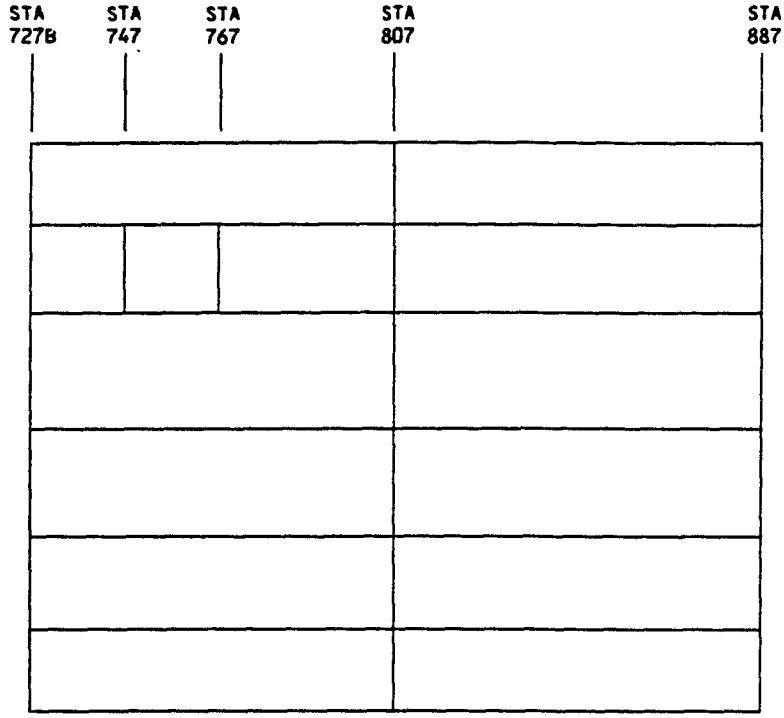

737-200 CARGO SECTION 46 (STA 727B-STA 887) PLAN VIEW
DETAIL IV

PANEL LOCATION	PANEL FACESHEET AND CORE COMPOSITION		CORRUGATED ALUMINUM CONSTRUCTION
	SINGLE DENSITY CORE		
	MEDIUM	HIGH	
MAIN CARGO DECK			A

737-200 CARGO SECTIONS 43 AND 46 (STA 344.17-STA 887)
TYPICAL FLOOR PANEL COMPOSITION AND CORRESPONDING LOCATION
(FOR DETAILS II, III AND IV)
TABLE II

Main Deck Floor Panel Identification - Cargo Airplanes
Figure 3 (Sheet 4)

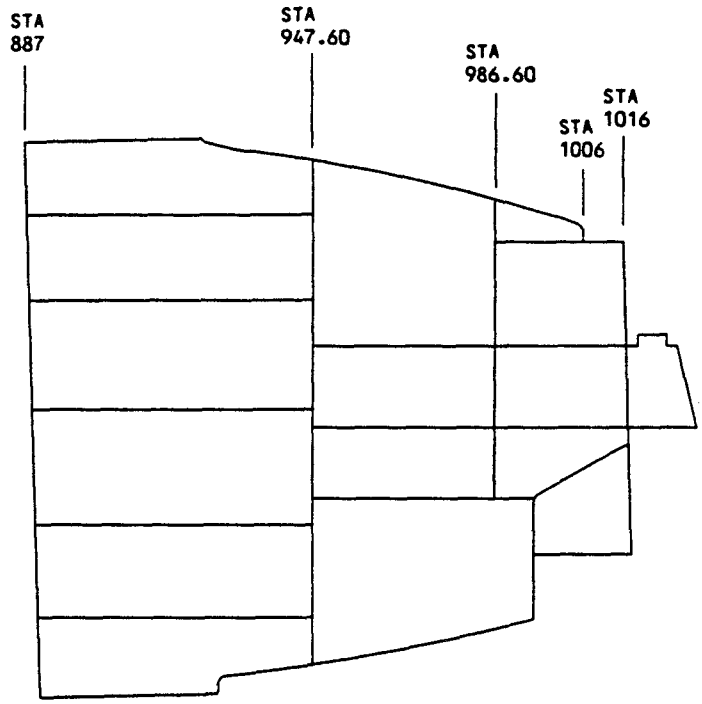

737-200 CARGO SECTION 46 (STA 887-STA 1016) PLAN VIEW
DETAIL V

PANEL LOCATION	PANEL FACESHEET AND CORE COMPOSITION		CORRUGATED ALUMINUM CONSTRUCTION
	SINGLE DENSITY CORE		
	MEDIUM	HIGH	
DOOR ENTRY AREAS	B H	C E F G	
GALLEY AND LAVATORY AREAS	D B	C E F G J D	
MAIN DECK CARGO AREA			A

737-200 CARGO SECTION 46 (STA 887-STA 1016)
TYPICAL FLOOR PANEL COMPOSITION AND CORRESPONDING LOCATION
(FOR DETAIL V)
TABLE III

Main Deck Floor Panel Identification - Cargo Airplanes
Figure 3 (Sheet 5)

THE DATA ON PAGES 17 AND 18 HAS BEEN DELETED.
PAGES 19 THRU 24 HAVE BEEN DELETED.

ITEM	MATERIAL	REPAIR FIG. NO.
1	23488-51 EXTRUSION [A] 7075-T6511	
2	23737-51 EXTRUSION [A] 7075-T6511	
3	0.020 CRES TYPE AISI 301 1/2 HARD	
4	0.063 7075-T6 SKINS WITH BALSA CORE	
5	GLASS FABRIC REINF EPOXY RESIN WITH BALSA CORE	
6	0.160 7075-T6	
7	MS20001P5-6150 HINGE	
8	23490-51 EXTRUSION [A] 7075-T6511	
9	23548-51 EXTRUSION [A] 7075-T6	

NOTES

[A] EXTRUSION NUMBERS OF:
AAR BROOKS AND PERKINS
AIR CARGO EQUIPMENT CORPORATION
12633 INKSTER ROAD
LIVONIA, MI 48150

[B] DETAILS OF MATERIAL ARE AVAILABLE FROM AAR BROOKS AND PERKINS, AIR CARGO EQUIPMENT CORPORATION

Seat Pallet Identification
Figure 4 (Sheet 1)

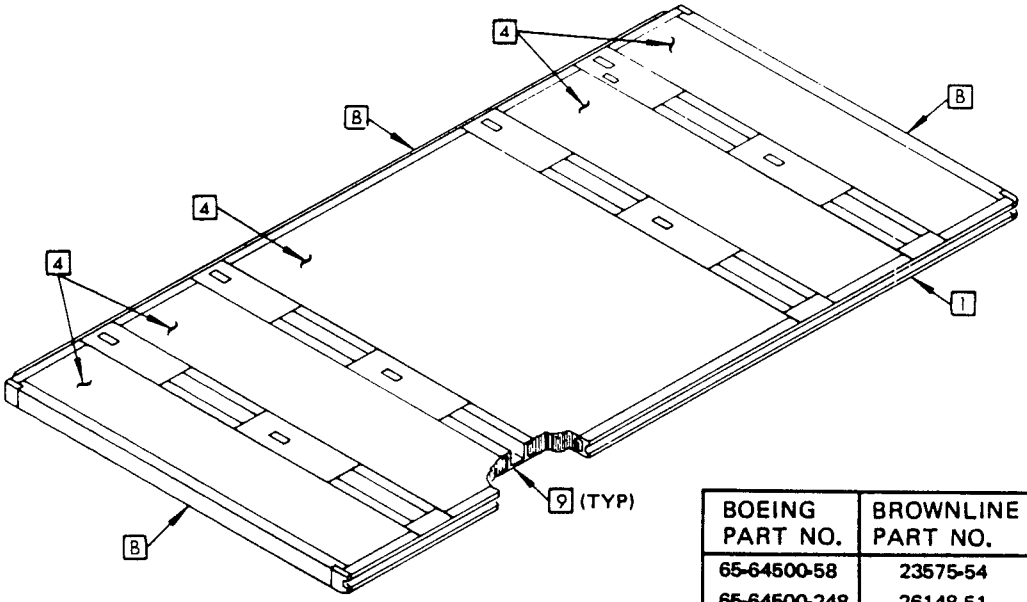

BOEING PART NO.	BROWNLINE PART NO.	EFFECTIVITY
65-64500-58	23575-54	LH
65-64500-248	26148-51	IN
65-64500-267	26167-51	LH
65-64500-270	26170-51	IN
65-64500-283	40505101	ND
65-64500-287	24465-56	ND
65-64500-288	23575-56	ND

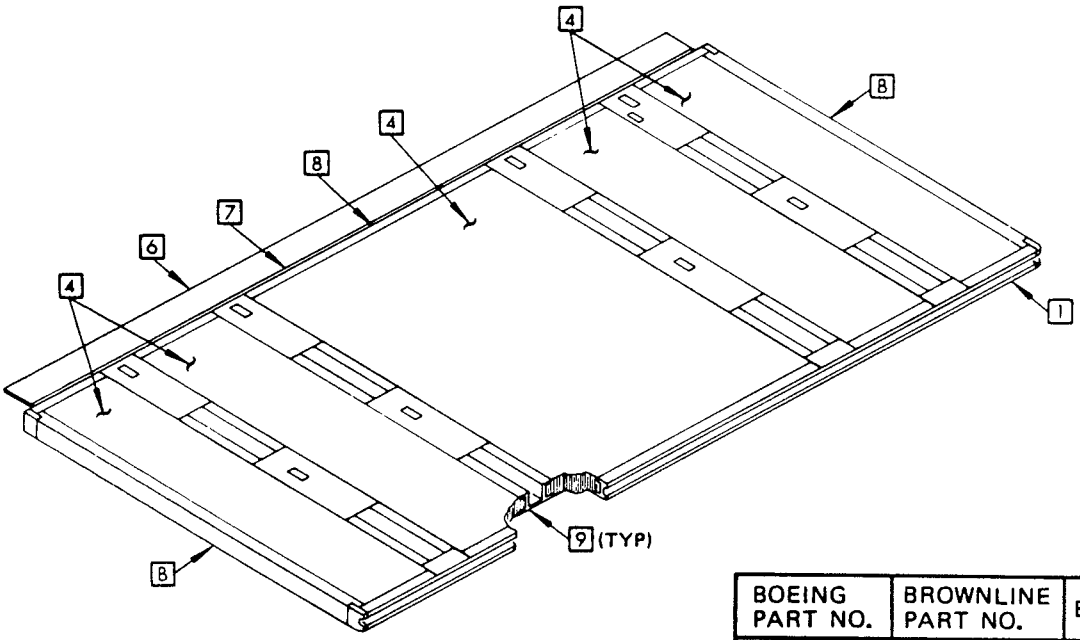

BOEING PART NO.	BROWNLINE PART NO.	EFFECTIVITY
65-64500-243	26143-51	IN
65-64500-263	26163-51	LH
65-64500-281	26163-52	ND

Seat Pallet Identification
Figure 4 (Sheet 2)

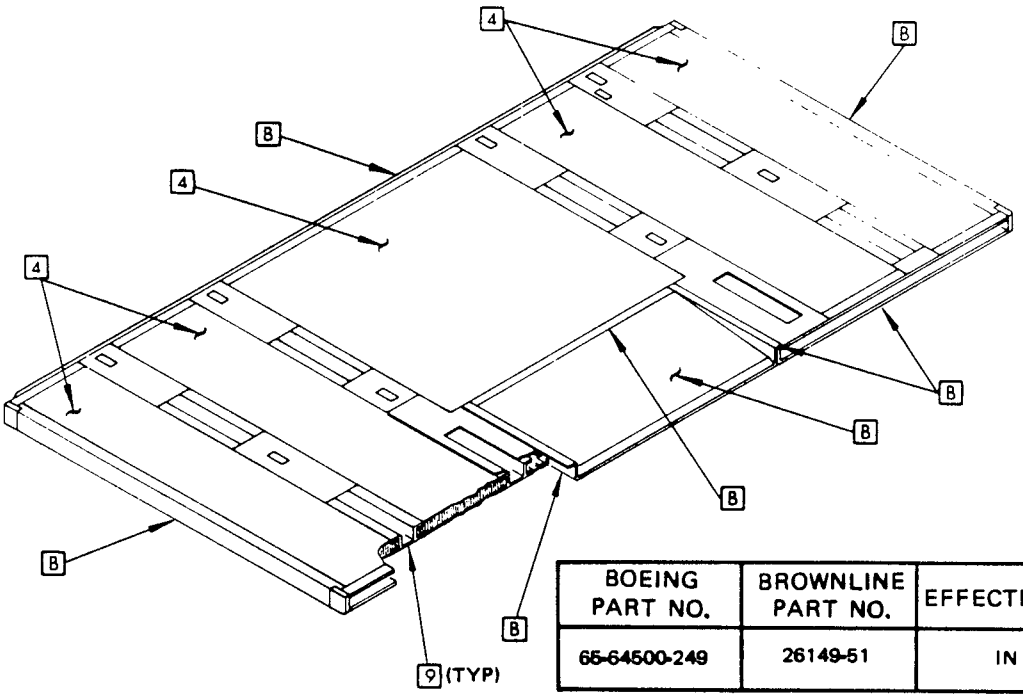

BOEING PART NO.	BROWNLINE PART NO.	EFFECTIVITY
65-64500-249	26149-51	IN

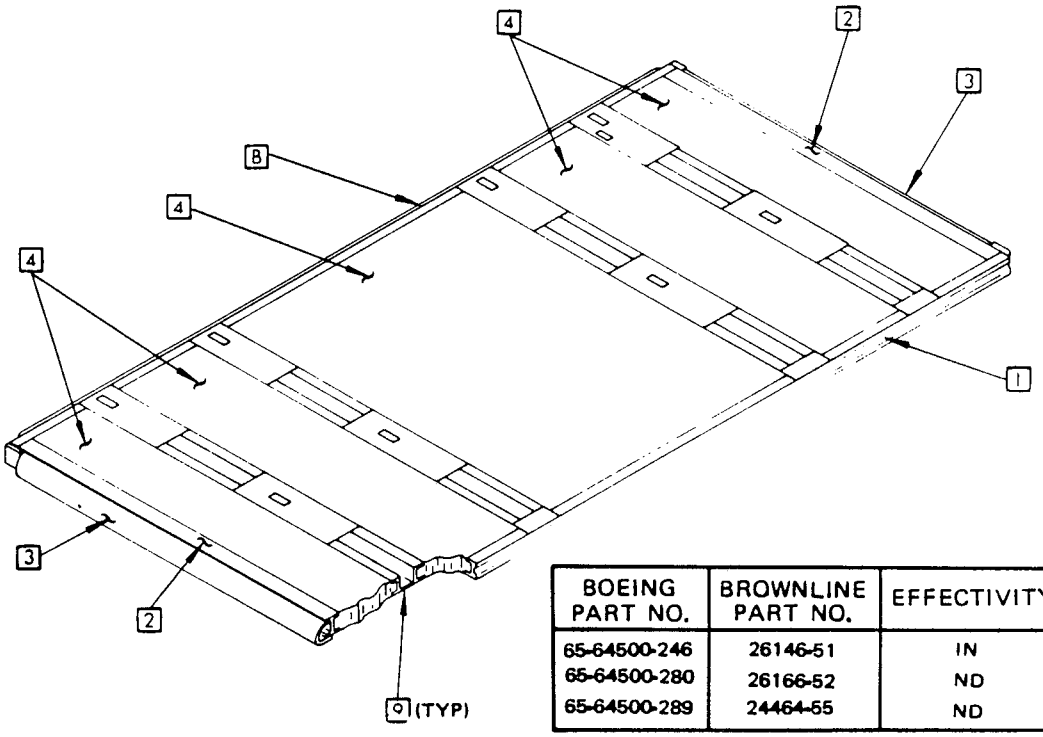

BOEING PART NO.	BROWNLINE PART NO.	EFFECTIVITY
65-64500-246	26146-51	IN
65-64500-280	26166-52	ND
65-64500-289	24464-55	ND

Seat Pallet Identification
Figure 4 (Sheet 3)

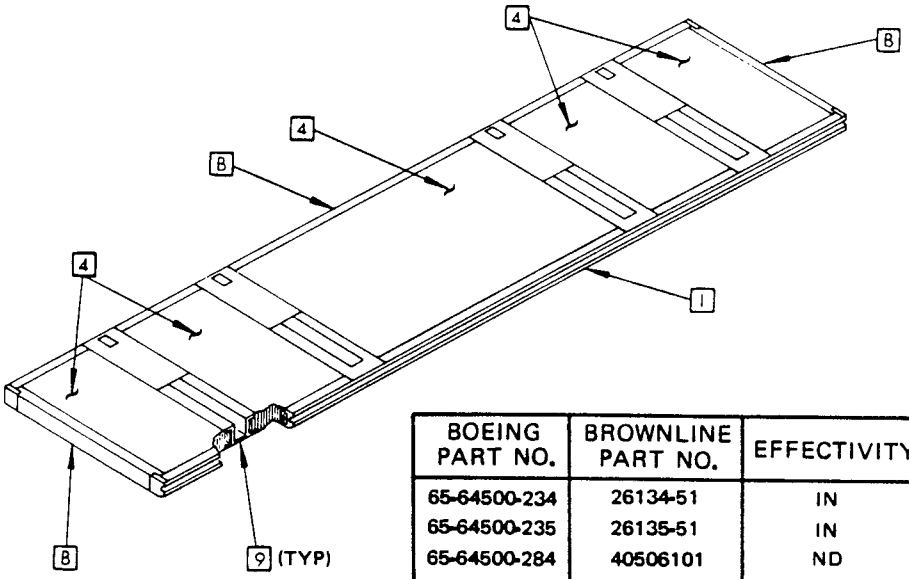

BOEING PART NO.	BROWNLINE PART NO.	EFFECTIVITY
65-64500-234	26134-51	IN
65-64500-235	26135-51	IN
65-64500-284	40506101	ND
65-64500-285	40507101	ND

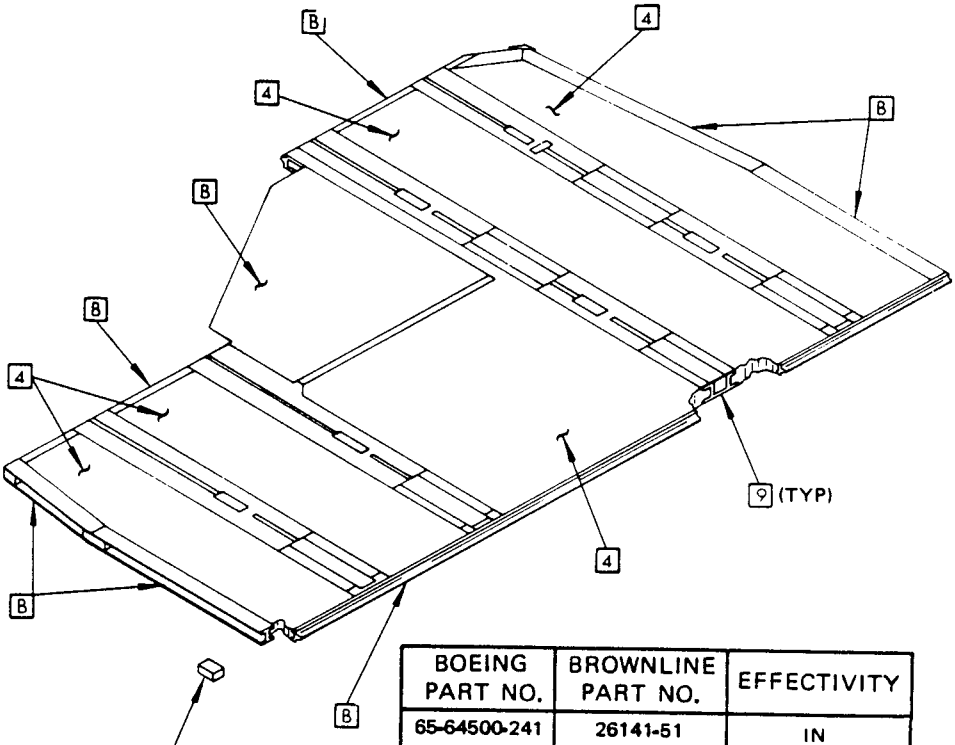

BOEING PART NO.	BROWNLINE PART NO.	EFFECTIVITY
65-64500-241	26141-51	IN
65-64500-261	26161-51	LH
65-64500-286	40508101	ND

Seat Pallet Identification
Figure 4 (Sheet 4)

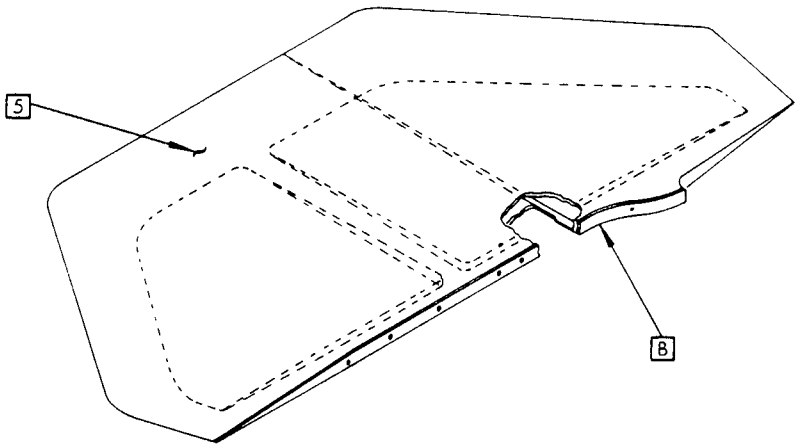

BOEING PART NO.	BROWNLINE PART NO.	EFFECTIVITY
65-64500-260	26160-51	LH

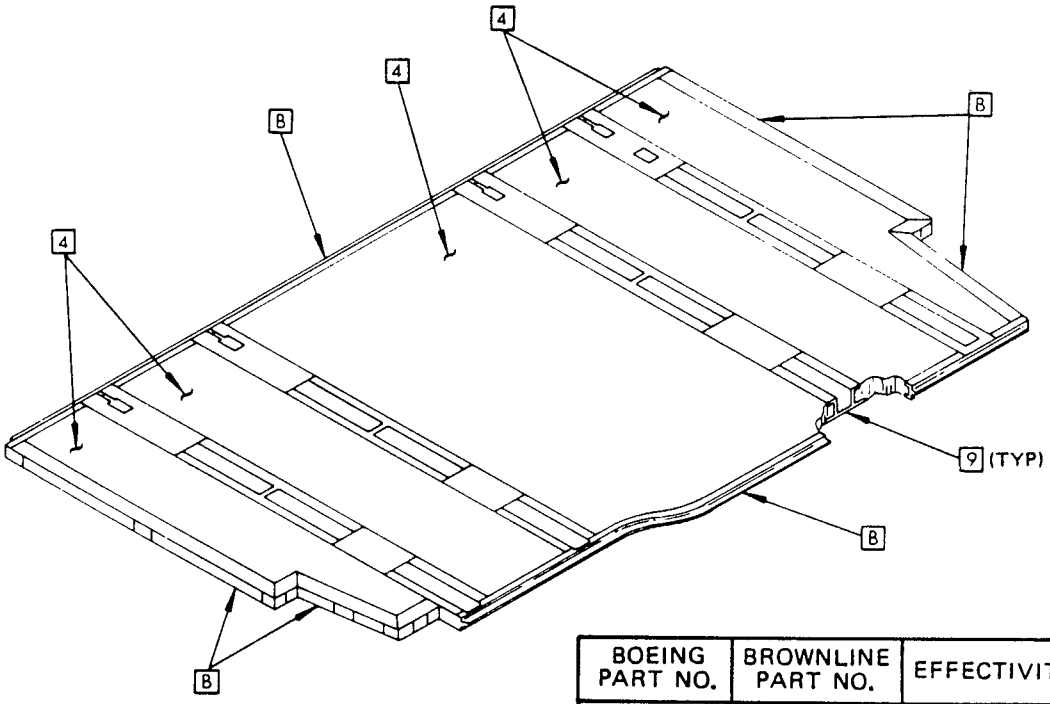

BOEING PART NO.	BROWNLINE PART NO.	EFFECTIVITY
65-64500-269	26169-51	LH

Seat Pallet Identification
Figure 4 (Sheet 5)

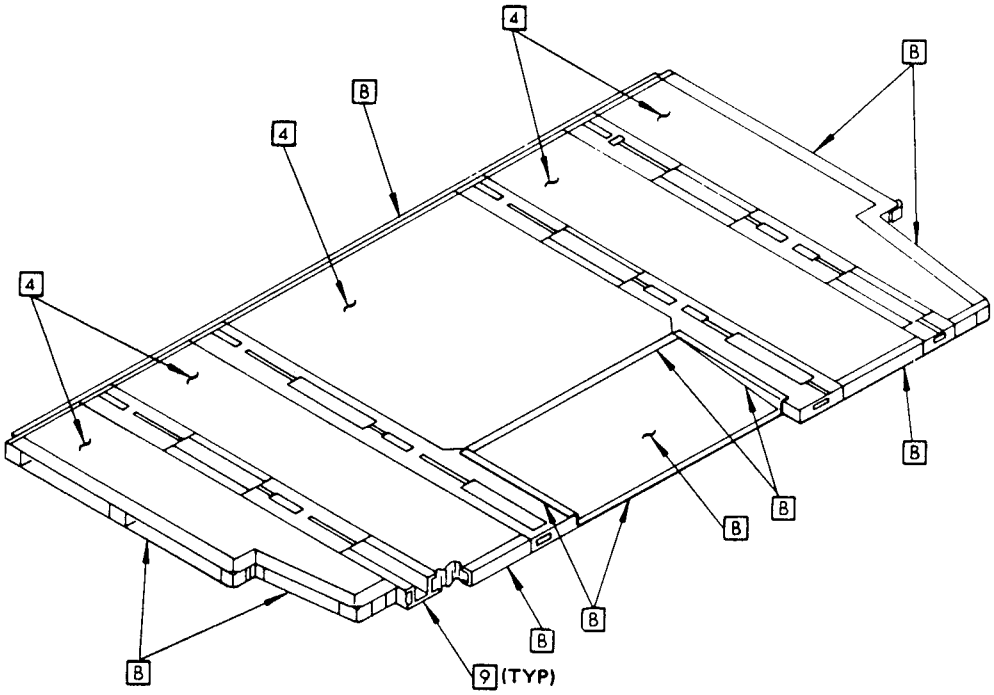

BOEING PART NO.	BROWNLINE PART NO.	EFFECTIVITY
65-64500-282	40504101	ND

Seat Pallet Identification
Figure 4 (Sheet 6)

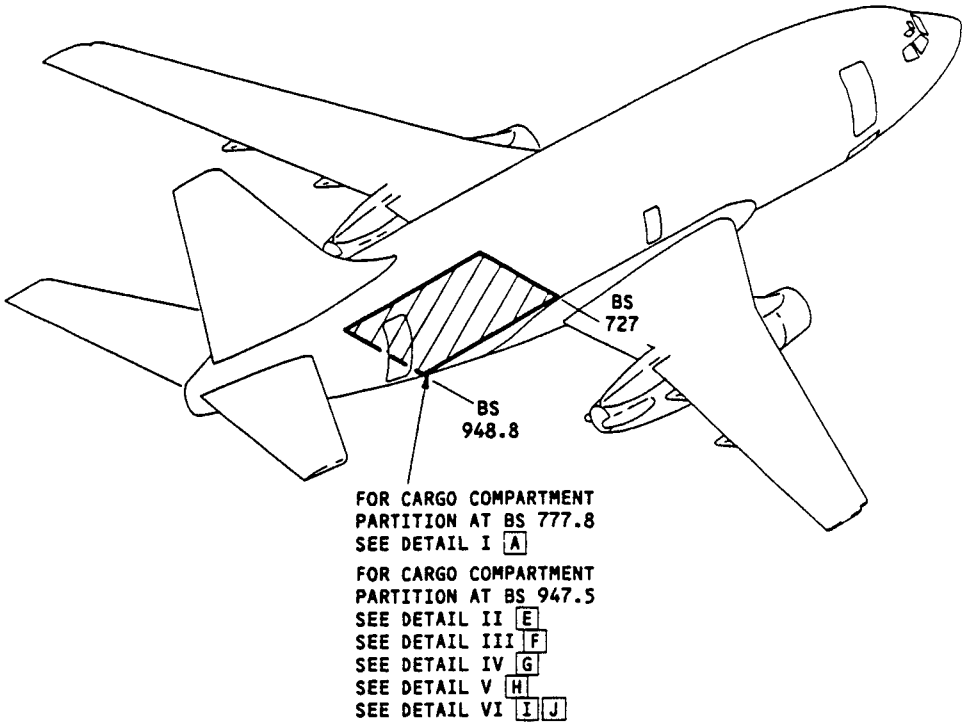

NOTES

A FOR CUM LINE NUMBERS:
441,442,445,458,567,572,595,614,616,620,
623,647,668,690,763,782,784,786,773,792,
800,812,814,816,833,837,845,857,861,865,
868,870,873,879,883,889,910,917,919,922,
947,985,1585,

B FOR CUM LINE NUMBERS:
441,442,445,458,567,572,595,614,616,620,
623,647,668,690,763,784,786,773,792,812,
814,816,833,861,868,947,985

C FOR CUM LINE NUMBERS:
441,442,445,458,567,572,595,614,616,620,
623,647,668 690

D FOR CUM LINE NUMBERS:
763,782,784,786,773,792,800,812,814,816,
833,837,845,857,861,865,868,870,873,889,
910,917,919,922,947,985,1585

E FOR CUM LINE NUMBERS:
2 THRU 7,9 THRU 11,13,15,17,20,23,26,29,32,
35,40,41,43,47,52,53,61,67,80,88,98,108,
113,118 THRU 120,127,141,152,154 THRU 156,
158 THRU 172,174 THRU 198,200 THRU 207,209
THRU 214,216 THRU 222,224 THRU 229,231 THRU
233,235 THRU 237,239 THRU 241,243,244,246
THRU 248,250,252,253,257,259 THRU 262,264,
266,267,269 THRU 273,275,277,279 THRU 285,
287,288,290 THRU 293,296 THRU 303,305 THRU
308,310,312 THRU 320,323 THRU 332,335 THRU
342,351 THRU 353,356 THRU 367,369,370,372
THRU 395,397 THRU 400,402,404,406,407,409,
410,412,415 THRU 418,420 THRU 426,428,431
THRU 435,438,440 THRU 442,445,448 THRU 480,
482,483,485,487 THRU 512,514,516 THRU 519,
521 THRU 545,547 THRU 570,572,574,575,577
THRU 579,581 THRU 589,591 THRU 596,598,599,
601,602,604,606,607,609,611 THRU 614,616
THRU 636,638 THRU 654,656 THRU 662,664 THRU
687,689 THRU 746,748 THRU 759,761 THRU 766,
768 THRU 778,780 THRU 812,814 THRU 879,881
THRU 927,929 THRU 950,952 THRU 974,976 THRU
988,990,991,993 THRU 999

Section 46 Cargo Compartment Partition Identification
Figure 5 (Sheet 1)

332959

NOTES

F FOR CUM LINE NUMBERS:
72,102,139,157,173,199,208,215,223,230,234,
238,242,245,249,251,254 THRU 256,258,263,
265,268,274,276,278,286,289,294,295,304,
309,311,321,322,333,344,346,348,354,368,
371,396,401,403,405,408,411,413,414,419,
427,429,430,436,437,439,443,444,446,447,
481,484,486,513,515,520,546,571,573,580,
590,597,600,603,605,608,610,615,637,655,
663,688,,747,760,767,779,813,880,928,951,
975,989,992,1025,1032,1034

G FOR CUM LINE NUMBERS:
576,1002

H FOR CUM LINE NUMBERS
1036,1040,1042,1046,1113

I FOR CUM LINE NUMBERS:
1000 THRU 1024,1026 THRU 1031,1033,1035,
1038,1039,1041,1044,1045,1047 THRU 1109,
1117 THRU 1523

J FOR CUM LINE NUMBERS:
1530 THRU 1585

K 250°F (121°C) CURE AT MANUFACTURE

Section 46 Cargo Compartment Partition Identification
Figure 5 (Sheet 2)

333649

REF DWG
65-82684

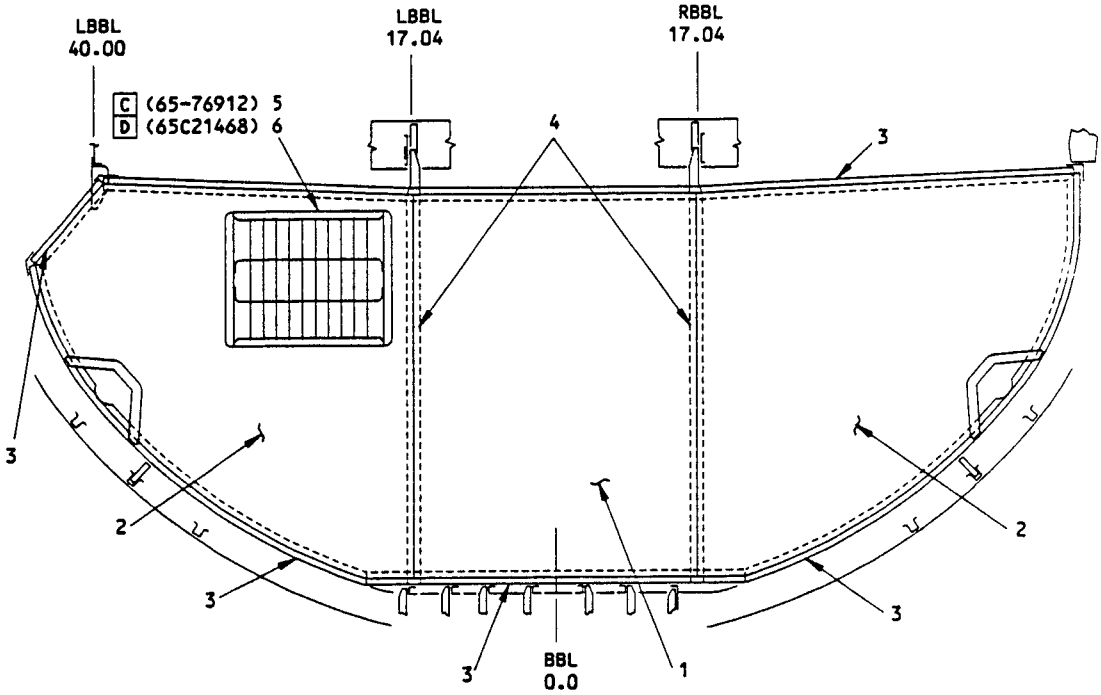

CARGO COMPARTMENT PARTITION - BS 777.8
DETAIL I A

ITEM	DESCRIPTION	GAGE	MATERIAL	EFFECTIVITY
1	REMOVABLE CENTER PANEL		GLASS/EPOXY HONEYCOMB SANDWICH PER BMS 4-17, CLASS I, TYPE I, GRADE 1 OR 2 (OPTIONAL: TYPE II)	B
2	PANEL		GLASS/EPOXY HONEYCOMB SANDWICH PER BMS 4-17, CLASS I, TYPE I, GRADE 1 OR 2 (OPTIONAL: TYPE II)	B
3	SUPPORT ANGLE		AND10133-1401 7075-T6511	
4	VERTICAL SUPPORT		AND10140-2001 7075-T6511	
5	GRILL ASSY PLATE	0.040	6061-T6 (OPTIONAL: 6951-T6)	C
6	GRILL ASSY TUBE WIRE	 0.05 OD 0.12 OD	 CRES 321/347 CRES 321-327	D

LIST OF MATERIALS FOR DETAIL I

Section 46 Cargo Compartment Partition Identification
Figure 5 (Sheet 3)

333652

REF DWG
65-49616

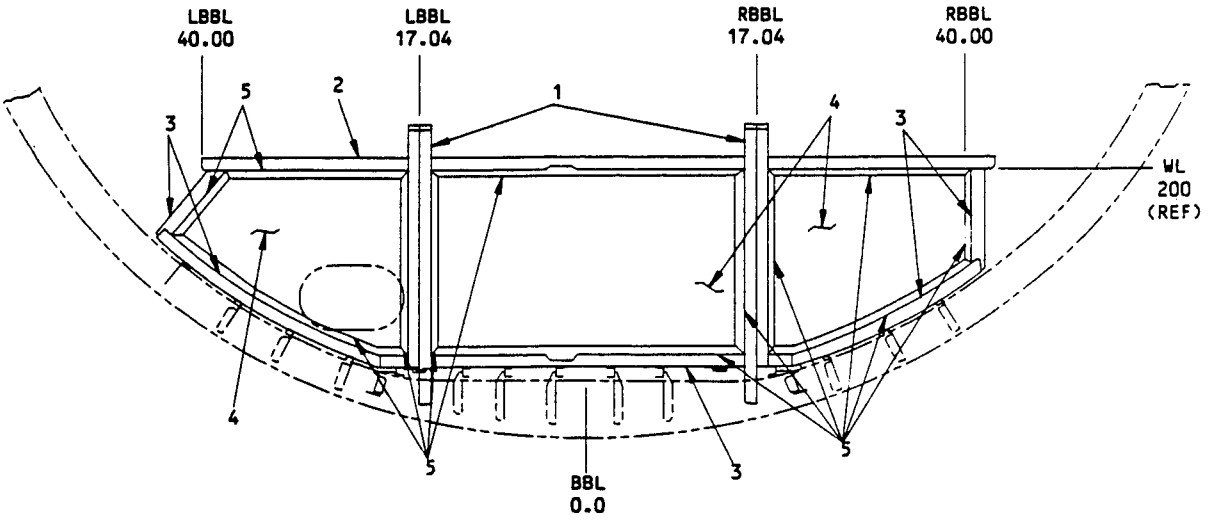

REAR VIEW
CARGO COMPARTMENT PARTITION - BS 947.5
DETAIL II [E]

ITEM	DESCRIPTION	GAGE	MATERIAL	EFFECTIVITY
1	STANCHION - LH, RH		AND10136-2001 7075-T6511	
2	ANGLE		BAC1503-100055 7075-T6511	
3	ANGLE	0.050	CLAD 7075-T6	
4	WEB	0.032	CLAD 7075-T6	
5	ANGLE		AND10134-1201 7075-T6511	

LIST OF MATERIALS FOR DETAIL II [E]

Section 46 Cargo Compartment Partition Identification
Figure 5 (Sheet 4)

574001

REF DWG
65-49616

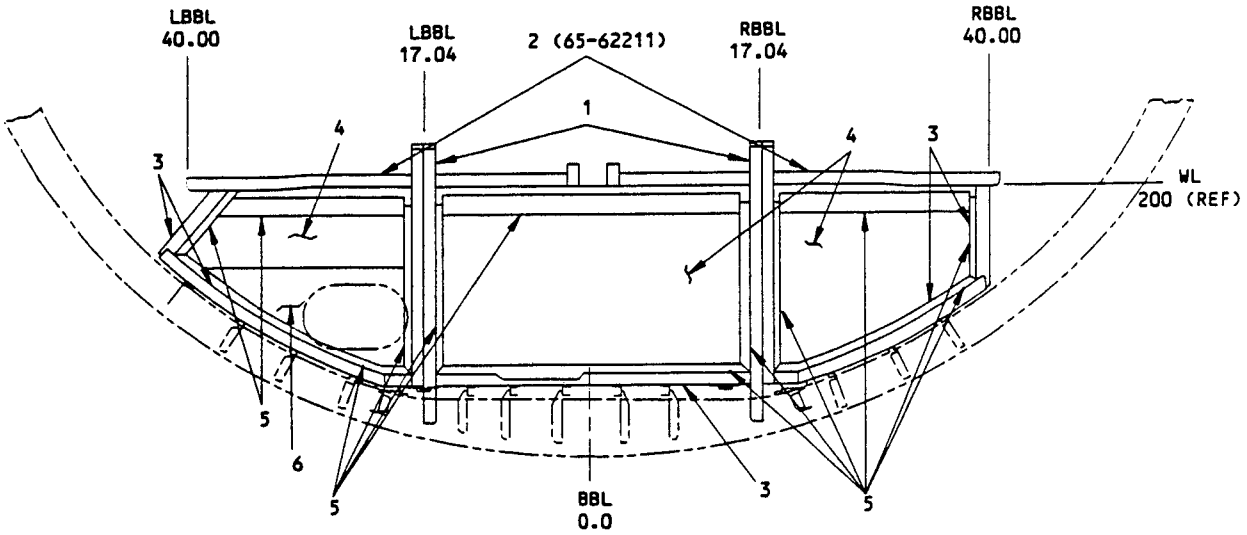

REAR VIEW
CARGO COMPARTMENT PARTITION - BS 947.5
DETAIL III F

ITEM	DESCRIPTION	GAGE	MATERIAL	EFFECTIVITY
1	STANCHION - LH,RH		AND10136-2001 7075-T6511	
2	ANGLE		BAC1503-1591 7075-T6511	
3	ANGLE	0.050	CLAD 7075-T6	
4	WEB	0.032	CLAD 7075-T6	
5	ANGLE		AND10134-1201 7075-T6511	
6	DOUBLER	0.040	CLAD 7075-T6	

LIST OF MATERIALS FOR DETAIL III F

Section 46 Cargo Compartment Partition Identification
Figure 5 (Sheet 5)

333653

REF DWG
65-49616

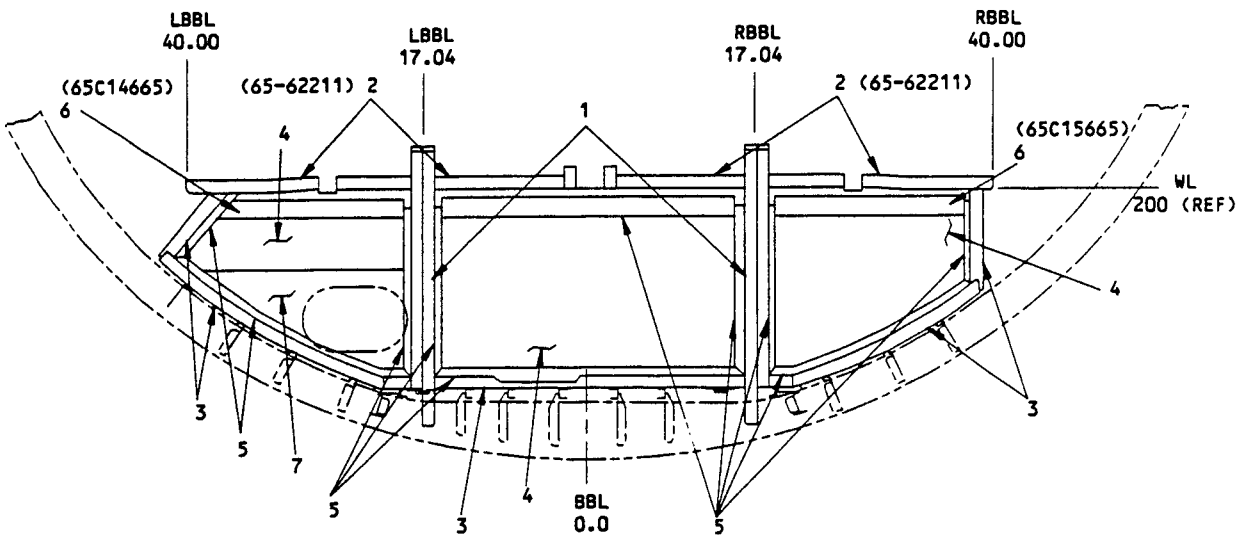

REAR VIEW
CARGO COMPARTMENT PARTITION - BS 947.5
DETAIL IV G

ITEM	DESCRIPTION	GAGE	MATERIAL	EFFECTIVITY
1	STANCHION - LH, RH		AND10136-2001 7075-T6511	
2	ANGLE		BAC1503-1591 7075-T6511	
3	ANGLE	0.050	CLAD 7075-T6	
4	WEB	0.032	CLAD 7075-T6	
5	ANGLE		AND10134-1201 7075-T6511	
6	CHANNEL		BAC1493-147 7075-T6	
7	DOUBLER	0.040	CLAD 7075-T6	

LIST OF MATERIALS FOR DETAIL IV G

Section 46 Cargo Compartment Partition Identification
Figure 5 (Sheet 6)

333654

REF DWG
65-49616

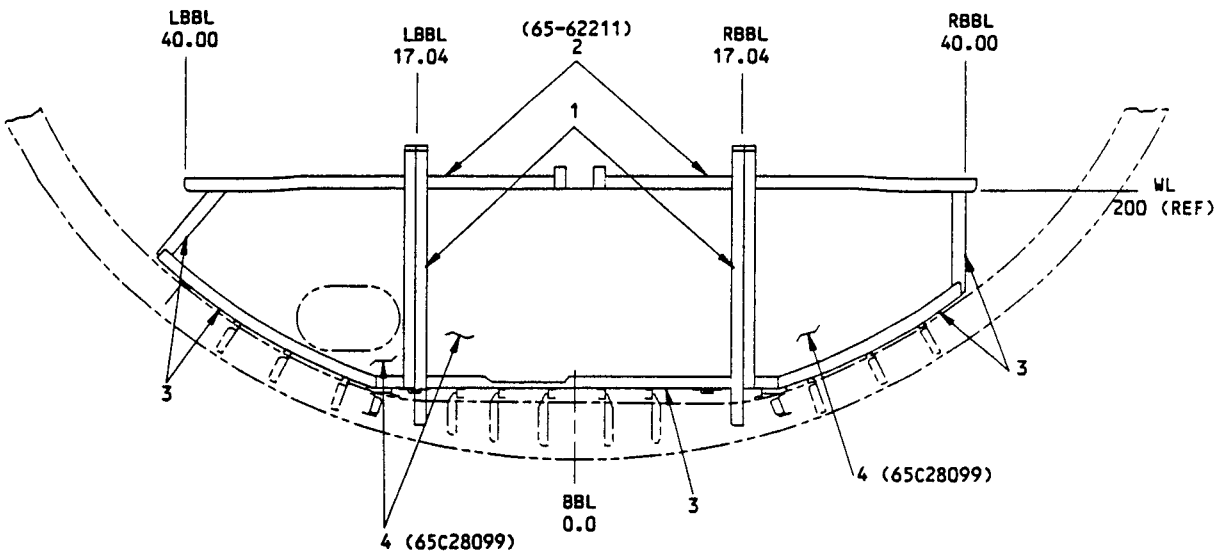

REAR VIEW
CARGO COMPARTMENT PARTITION - BS 947.5
DETAIL V [H]

ITEM	DESCRIPTION	GAGE	MATERIAL	EFFECTIVITY
1	STANCHION - LH, RH		AND10136-2001 7075-T6511	
2	ANGLE		BAC1503-1591 7075-T6511	
3	ANGLE	0.050	CLAD 7075-T6	
4	PANEL		GLASS/EPOXY HONEYCOMB SANDWICH PER BMS 4-17, CLASS I, TYPE II, GRADE 2.0 [K]	

LIST OF MATERIALS FOR DETAIL V [H]

Section 46 Cargo Compartment Partition Identification
Figure 5 (Sheet 7)

333655

REF DWG
65-49616

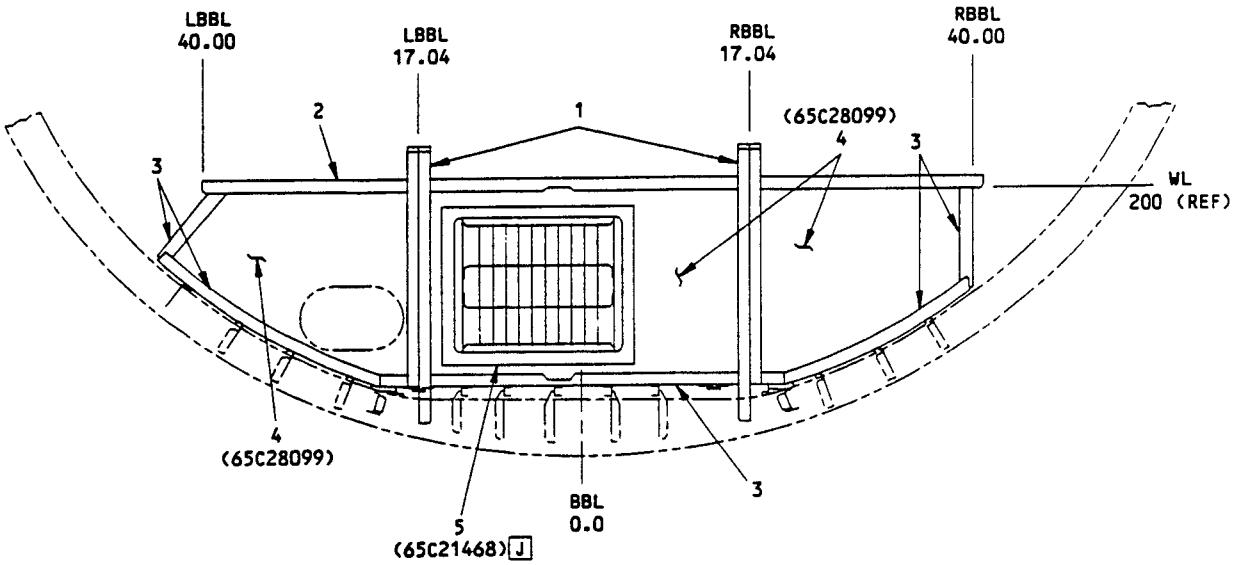

REAR VIEW
CARGO COMPARTMENT PARTITION - BS 947.5
DETAIL VI I J

ITEM	DESCRIPTION	GAGE	MATERIAL	EFFECTIVITY
1	STANCHION - LH, RH		AND10136-2001 7075-T6511	
2	BEAM - ANGLE		BAC1503-100055 7075-T6511	
3	ANGLE	0.050	CLAD 7075-T6	
4	PANEL		GLASS/EPOXY HONEYCOMB SANDWICH PER BMS 4-17, CLASS I, TYPE II, GRADE 2.0 K	
5	GRILL ASSY			J
	ANGLE	0.063	6061-T6	
	ANGLE	0.091	6061-T6	
	TUBE	0.250	6061-T6	

LIST OF MATERIALS FOR DETAIL VI I J

Section 46 Cargo Compartment Partition Identification
Figure 5 (Sheet 8)

333657

REPAIR INSTRUCTIONS

1. General

   A. These procedures apply to aluminum faced balsa core seat pallet panels. See Table I for limitations on the size of repairs.

   B. Refer to par. 4 for preparation of BMS 5-92, Type I adhesive used in Fig. 1 and 2.

   C. Refer to par. 5 for preparation of BMS 5-28, Type 15 potting compound used in Fig. 1, 2, and 3.

2. Repairs

   A. Repairs to dents in the top face greater than 1.0 inch across the major axis or greater than 0.02 inch deep.

      (1) Clean the repair area for bonding as described in paragraph 3.

      (2) Fill the depression with BMS 5-28, Type 15 potting compound. Cure the compound 24 hours at 75°F to 80°F or 5 hours at 120°F to 130°F. Sand the potted area until it is flush with the surrounding skin.

   B. Repair to the top face ply with undamaged core.

      (1) Carefully cut the damaged face ply with a circular hole saw and remove the damaged portion, or if the face ply is cracked, drill stop holes at the extremities as shown in Detail I.

      (2) Apply BMS 5-28, Type 15 potting compound to the exposed core. Cure the compound 24 hours at 75°F to 80°F or 5 hours at 120°F to 130°F. Sand the potted area until it is flush with the surrounding skin.

      (3) Install a doubler of 7076-T6 the same gage as the damaged skin to extend 40 x gage beyond the crack or the edge of the hole as shown in Detail I. See paragraph 3 for cleaning and bonding.

   C. Repair to the top face ply and core less than 1.0-inch diameter, when the center of damage is not so close to the joggle in the vicinity of the panel edge that it will prevent the installation of a doubler with an overlap of 40 x gage.

      (1) Remove the damage by cutting a circular hole not more than 1.0-inch diameter.

Seat Pallet Panel Repair
Figure 1 (Sheet 1)

(2) Fill the cavity in the core with BMS 5-28, Type 15 potting compound. Cure the compound 24 hours at 75°F to 80°F or 5 hours at 120°F to 130°F. Sand the potted area until it is flush with the surrounding skin.

(3) Install a doubler of 7075-T6 the same gage as the damaged skin to extend 40 x gage beyond the edge of the hole as shown in Detail I. See paragraph 3 for cleaning and bonding.

D. Repair to the top face ply and core greater than 1.0-inch diameter, when the center of damage is not so close to the joggle in the vicinity of the panel edge that it will prevent the installation of a doubler with an overlap of 40 x gage.

(1) Cut out the damaged area with a circular hole saw, taking care not to damage the lower face ply.

(2) Make a core plug from balsa, 0.060 to 0.125 inch smaller than the diameter of the hole.

(3) Install the plug coating all faying surfaces with BMS 5-28, Type 15 or BMS 5-92, Type I filled adhesive. Where the plug is below the outer surface of the face ply, fill with adhesive. Cure the compound 24 hours at 75°F to 80°F or 5 hours at 120°F to 130°F. Sand the potted area until it is flush with the surrounding skin.

(4) Install a doubler of 7075-T6 the same gage as the damaged skin to extend 40 x gage beyond the edge of the hole as shown in Detail II. See paragraph 3 for cleaning and bonding.

E. Repair to both face plies and core, when the center of damage is not so close to the joggle in the vicinity of the panel edge that it will prevent the installation of a doubler with an overlap of 40 x gage.

NOTE: Repairs to the bottom face ply must be flush, consequently the top ply and core must be cut out even though the damage may be confined to the bottom surface.

(1) Cut a circular hole in the bottom face ply to remove damage.

(2) Cut the top face ply and core with a circular hole saw of such a size to permit the installation of an internal doubler with an overlap of 40 x gage of bottom ply. Take care not to damage the inner surface of the bottom ply.

(3) Install an internal doubler and a filler to repair the bottom ply as shown in Detail II. See paragraph 3 for cleaning and bonding.

(4) Complete the remainder of the repair as described in paragraph 2.D.

Seat Pallet Panel Repair
Figure 1 (Sheet 2)

F. Repairs to delaminated areas under 16 square inches in area.

(1) Locate the void by coin tap or other suitable method.

(2) Drill a 0.125-inch diameter hole at each end of the void. Only one hole is required if the void extends to the edge of the panel.

(3) Inject BMS 5-92, Type I adhesive into one hole until it comes out of the other hole or the panel edge.

(4) Fill the 0.125 diameter holes with adhesive and finish off flush with the outer surface.

3. Aluminum to Aluminum Bonding Process

A. Strip the organic and inorganic finish from the repair area and clean and alodine the surfaces to be bonded as described in 51-10-2. Before alodining, thoroughly mask all exposed core with lead or teflon tape.

B. After the final rinsing of the alodined surfaces the area must be air-dried (not less than 75°F) until no sign of water remains, but no longer than 1 hour.

C. Spread BMS 5-92, Type I over both faying surfaces with a grooved trowel or spatula. Apply 0.005 to 0.010 inch thick. See paragraph 4 for preparation of adhesive.

D. Apply a vacuum bag and hold 20 inches of vacuum or use clamps to provide 10 to 15 pounds per square inch clamping pressure.

E. Cure the bond 16 hours at room temperature or 3 hours at 140°F to 160°F.

F. Restore finish.

Seat Pallet Panel Repair
Figure 1 (Sheet 2A)

4. Preparation of BMS 5-92, Type I Adhesive

A. The adhesive must be mixed thoroughly to a uniform gray color in the following ratio before use. Scrape the sides and bottom of the container frequently to pull uncombined material into the mix.

Component	Parts by Weight	Parts by Volume
Base B (Off-White)	100	100
Hardener A (Gray)	140	150

B. Pot life of the adhesive is 2 hours if mixed in small batches weighing less than 6 ounces.

C. Cotton, rubber, or plastic gloves must be worn when working with the adhesive.

D. Thinning of adhesive with solvents is not permitted.

5. Preparation of BMS 5-28, Type 15 Potting Compound

A. Weigh the components to the proportions specified on the package. Do not mix a batch larger than 350 grams.

B. Mix the components together, using long strokes to avoid the inclusion of air, until the mixture obtains an even color. Do not thin resins.

C. Pot life of the mixture is approximately 30 minutes at 75°F.

Seat Pallet Panel Repair
Figure 1 (Sheet 3)

NOTES

- THIS REPAIR WILL NOT HAVE AN EFFECT ON A STRUCTURALLY SIGNIFICANT ITEM (SSI) GIVEN IN SRM 51-00-4, FIG. 3. THUS, NO CHANGE TO THE SUPPLEMENTAL STRUCTURAL INSPECTION DOCUMENT (SSID) INSPECTION PROGRAM IS NECESSARY.
- WHEN YOU DO THIS REPAIR, REFER TO:
  - AMM 51-21-0 FOR RESTORATION OF FINISH
  - SRM 51-10-2 FOR PROTECTIVE TREATMENT OF METAL
  - SRM 51-20-3 FOR SOURCES OF NONMETALLIC REPAIR MATERIALS.
- REMOVE ALL NICKS, SCRATCHES, BURRS, SHARP EDGES AND CORNERS FROM THE INITIAL AND REPAIR PARTS.

[A] BALSA, 8 LB PER CU FT DENSITY

[B] POLISH OUT SCRATCHES UP TO 0.010 INCH DEEP WITH ALUMINUM WOOL AND APPLY A CHEMICAL CONVERSION COATING TO THE REWORKED AREA AS GIVEN IN SRM 51-10-2. DEEPER SCRATCHES MUST BE REPAIRED IN A SIMILAR MANNER TO A CRACK.

[C] SAME GAGE AS SKIN PLY BEING REPAIRED.

REPAIR MATERIAL			
PART		QTY	MATERIAL
1	DOUBLER	A/R	7075-T6 [C]
2	FILLER	A/R	7075-T6 [C]
3	DOUBLER	A/R	7075-T6 [C]
4	CORE	A/R	[A]

REPAIR LIMITS FOR DAMAGE TO PANELS		
TYPE OF DAMAGE	LENGTH OR DIAMETER OF DAMAGE (INCHES)	DEPTH OF DAMAGE (INCHES)
PLY DELAMINATION	16 SQUARE INCHES	
CRACK OR HOLE	4	THROUGH FACE PLY
GOUGE	3	THROUGH FACE PLY INTO CORE
DENT OR DEPRESSION	4	0.25
HOLE	3	COMPLETELY THROUGH PANEL
SCRATCH	4	[B]

TABLE I

Seat Pallet Panel Repair
Figure 1 (Sheet 4)

C10177

BOEING PROPRIETARY - Copyright © - Unpublished Work - See title page for details.

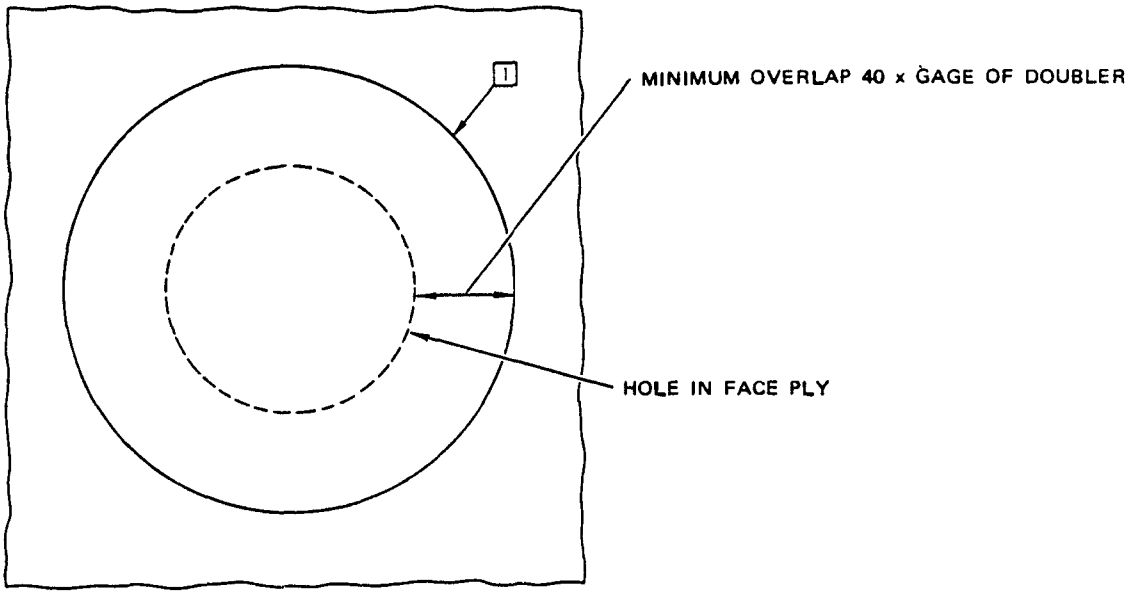

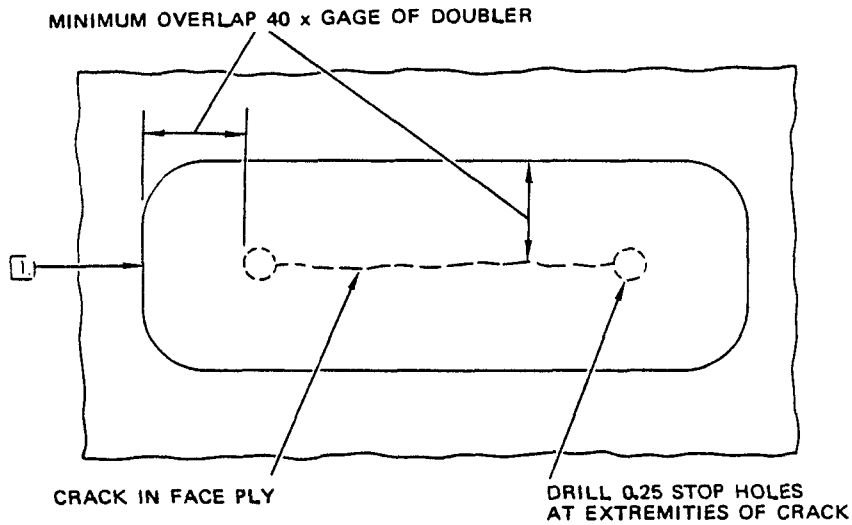

TYPICAL REPAIR TO HOLE OR CRACK IN FACE PLY

DETAIL I

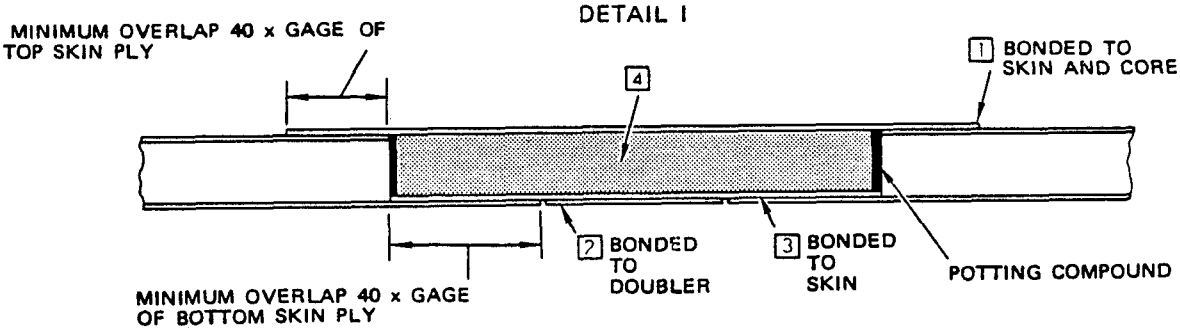

TYPICAL REPAIR TO FACE PLIES AND CORE

DETAIL II

Seat Pallet Panel Repairs
Figure 1 (Sheet 5)

REPAIR INSTRUCTIONS

1. General

   A. These procedures apply to aluminum faced balsa, PVC, and Nomex core floor panels. See Table I for limitations on the size of repairs.

   B. Refer to Fig. 1 for preparation of BMS 5-92, Type I adhesive.

   C. Refer to Fig. 1 for preparation of BMS 5-28, Type 15 potting compound.

   NOTE: Panel must be dry before application of any repair material.

2. Repairs

   A. Repairs to dents greater than 1.0 inch across the major axis or greater than 0.02 inch deep.

      (1) Clean the repair area for bonding as described in par. 3.

      (2) Fill the depression with BMS 5-28, Type 15 potting compound. Cure the compound 24 hours at 75°F to 80°F or 5 hours at 120°F to 130°F. Sand the potted area until it is flush with the surrounding skin.

      (3) Bond a doubler of the same gage and material as the damaged skin, overlapping the potted area by 40 times the gage of the skin. Refer to par 3 for cleaning and bonding.

   B. Repair to the one face ply with undamaged core.

      (1) Carefully cut the damaged face ply with a circular hole saw and remove the damaged portion, or if the face ply is cracked, drill stop holes at the extremities as shown in Detail I.

      (2) Apply BMS 5-28, Type 15 potting compound to the exposed core. Cure the compound 24 hours at 75°F to 80°F or 5 hours at 120°F to 130°F. Sand the potted area until it is flush with the surrounding skin.

      (3) Install a doubler of the same gage and material as the damaged skin to extend 40 x gage beyond the crack or the edge of the hole, as shown in Detail I. Refer to par. 3 for cleaning and bonding.

Metal Faced PVC, Balsa, and Nomex Core Floor Panel Repair
Figure 2 (Sheet 1)

C. Repair to one face ply and core less than 1.0-inch diameter, when the center of damage is not so close to the panel edge that it will prevent the installation of a doubler with an overlap of 40 x gage.

(1) Remove the damage by cutting a circular hole not more than 1.0-inch diameter.

(2) Rout out the core 0.50 back from the edge of the hole.

NOTE: For Nomex panels, rout out only the damaged portion of the core.

(3) Fill the cavity in the core with BMS 5-28, Type 15 potting compound. Cure the compound 24 hours at 75°F to 80°F or 5 hours at 120°F to 130°F. Sand the potted area until it is flush with the surrounding skin.

(4) Install a doubler of the same gage and material as the damaged skin to extend 40 x gage beyond the edge of the hole as shown in Detail I. Refer to par. 3 for cleaning and bonding.

D. Repair to the one face ply and core greater than 1.0-inch diameter, when the center of damage is not so close to the panel edge that it will prevent the installation of a doubler with an overlap of 40 x gage.

(1) Cut out the damaged area with a circular hole saw, taking care not to damage the opposite face ply.

(2) Make a core plug from similar material to the original core, 0.060 to 0.125 inch smaller than the diameter of the hole.

(3) Pot the core plug into the hole with BMS 5-28, Type 15 potting compound. Use sufficient potting compound so that the top surface of the plug is slightly above the surface of the panel. Cure the compound 24 hours at 75°F to 80°F or 5 hours at 120°F to 130°F. Sand the potted area until it is flush with the surrounding skin.

(4) Install a doubler of the same gage and material as the damaged skin to extend 40 x gage beyond the edge of the hole as shown in Detail II. Refer to par. 3 for cleaning and bonding.

E. Repair to both face plies and core, when the center of damage is not so close to the panel edge that it will prevent the installation of a doubler with an overlap of 40 x gage.

(1) Where both plies are damaged, cut right through the panel with a circular hole saw.

(2) Repair the panel as described in par. 2.D, except that a doubler must be applied to both outer faces, to repair the top and bottom plies as shown in Detail II.

Metal Faced PVC, Balsa, and Nomex Core Floor Panel Repair
Figure 2 (Sheet 2)

F. Repairs to delaminated areas under 16 square inches in area.

NOTE: It is preferable to repair delamination by removal of the skin from the affected area as described in par. 2.B. Repair by adhesive injection as described in this paragraph is an optional alternative, except in the case of panels with Nomex core.

(1) Locate the void by coin tap or other suitable method.

(2) Drill a 0.125-inch diameter hole at each end of the void. Only one hole is required if the void extends to the edge of the panel.

(3) Inject BMS 5-92, Type I adhesive into one hole until it comes out of the other hole or the panel edge.

(4) Fill the 0.125 diameter holes with adhesive and finish off flush with the outer surface.

(5) Apply vacuum bag or 10 to 15 psi pressure and cure as described in par. 3.

G. Repair to edge delamination and damage to potting and core less than 1.0 inch deep and 3.0 inches long for PVC and balsa core panels.

(1) Install bolts and nuts in the spacers to ensure that the face plies will not be separated from the spacers during the course of repair work.

(2) Insert a dull, clean spatula between the delaminated skin and the core to determine the extent of the damage.

(3) Straighten out any bent metal.

(4) Inject BMS 5-92, Type I adhesive into the damaged area with a syringe or sealant gun, clamp the edge firmly into shape, and cure 16 hours at room temperature or 3 hours at 140 to 160°F.

(5) If the edge potting or core is damaged fill it with BMS 5-28, Type 15 potting compound (Detail III). Cure the potting compound 24 hours at 75°F to 80°F or 5 hours at 120°F to 130°F.

(6) Where a face ply is damaged, install a doubler to overlap the damaged area by a minimum of 40 x the gage of the face ply. Refer to par. 3 for cleaning and bonding.

H. Repair to edge delamination and damage to potting and core greater than 1.0 inch deep and 3.0 inches long for PVC and balsa core panels.

(1) Insert bolts and nuts in the spacers in the vicinity of the damaged area to prevent further delamination during repair operations.

Metal Faced PVC, Balsa, and Nomex Core Floor Panel Repair
Figure 2 (Sheet 3)

(2) Trim off damaged skin and remove damaged core to a distance at least 1.0 inch back from the edge of the panel. Carefully remove any spacers in the damaged area.

(3) Straighten any bent metal.

(4) Bond any delaminated areas back together as described in par. 2.G.(4).

(5) Bond a section of core with one face sheet attached or an undamaged section of a scrap panel with one face removed into the trimmed area with BMS 5-92, Type I adhesive as shown in Detail IV. The attached face sheet should correspond to the removed face sheet of the panel being repaired. The maximum gap between the new and trimmed face sheet must be 0.06 inch. Cure the bonded section 16 hours at room temperature or 3 hours at 140°F to 160°F.

(6) Bond a doubler of the same material and gage as the face sheet over the damaged area, overlapping the area by 40 x the gage of the face sheet. Refer to par. 3 for cleaning and bonding.

(7) Install new spacers where they were removed for repair.

I. Repair to edge delamination and damage to core for Nomex core panels.

(1) Insert bolts and nuts in the spacers in the vicinity of the damaged area to prevent further delamination during repair operations.

(2) Trim off delaminated skin and remove damaged portion of core. Carefully remove any spacers in the damaged area.

(3) Fill cavity in core with BMS 5-28, Type 15 potting compound. Cure the compound 24 hours at 75°F to 80°F or 5 hours at 120°F to 130°F. Sand the potted area flush with the surrounding skin and panel edge.

NOTE: If damage to core is extensive, bond a section of core with one skin attached or an undamaged section of a scrap panel with one skin removed into the trimmed area with BMS 5-28, Type 15 potting compound as shown in Detail IV. The attached skin should correspond to the removed skin of panel being repaired. The maximum gap between the new and trimmed face sheet must be 0.06 inch.

(4) Bond a doubler of the same material and thickness as the face sheet over the damaged area, overlapping the area by 40 x gage.

Metal Faced PVC, Balsa, and Nomex Core Floor Panel Repair
Figure 2 (Sheet 4)

3. Aluminum to Aluminum Bonding Process

WARNING: THESE CHEMICALS CONTAIN TOXIC INGREDIENTS. PROVIDE ADEQUATE VENTILATION AND PROTECT THE SKIN AND EYES FROM CONTACT WITH UNCURED RESIN OR CURING AGENT. WEAR RUBBER GLOVES OVER COTTON GLOVES FOR PROTECTION OF HANDS. IF SKIN IS EXPOSED TO DIRECT CONTACT WITH UNCURED RESINS OR CURING AGENT WASH WITH SOAP AND WARM WATER. AVOID THE USE OF SOLVENTS FOR CLEANING THE SKIN.

A. Strip the organic and inorganic finish from the repair area and clean and alodine the surfaces to be bonded as described in 51-10-2. Before alodining, thoroughly mask all exposed core with lead or teflon tape.

B. After the final rinsing of the alodined surfaces the area must be air-dried (not less than 75°F) until no sign of water remains, but no longer than 1 hour.

C. Apply primer as described in 51-40-5, par. 4.

D. Spread BMS 5-92, Type I over both faying surfaces with a grooved trowel or spatula. Apply 0.005 to 0.010 inch thick. Refer to par. 4 for preparation of adhesive.

E. Apply a vacuum bag and hold 20 inches of vacuum or use clamps to provide 10 to 15 pounds per square inch clamping pressure.

F. Cure the bond 16 hours at room temperature or 3 hours at 140°F to 160°F.

G. Restore finish.

Metal Faced PVC, Balsa, and Nomex Core Floor Panel Repair
Figure 2 (Sheet 5)

NOTES

- THIS REPAIR WILL NOT HAVE AN EFFECT ON A STRUCTURALLY SIGNIFICANT ITEM (SSI) GIVEN IN SRM 51-00-4, FIG. 3. THUS, NO CHANGE TO THE SUPPLEMENTAL STRUCTURAL INSPECTION DOCUMENT (SSID) INSPECTION PROGRAM IS NECESSARY.
- WHEN YOU DO THIS REPAIR, REFER TO:
  - AMM 51-21-0 FOR RESTORATION OF FINISH
  - SRM 51-10-2 FOR PROTECTIVE TREATMENT OF METAL
  - SRM 51-20-3 FOR SOURCES OF NONMETALLIC REPAIR MATERIALS.
- REMOVE ALL NICKS, SCRATCHES, BURRS, SHARP EDGES AND CORNERS FROM THE INITIAL AND REPAIR PARTS.

[A] POLISH OUT SCRATCHES UP TO 0.010 INCH DEEP ON TOP FACE OR 0.005 INCH DEEP ON BOTTOM FACE WITH ALUMINUM WOOL. APPLY A CHEMICAL CONVERSION COATING TO THE REWORKED AREA AS GIVEN IN SRM 51-10-2. DEEPER SCRATCHES MUST BE REPAIRED IN A SIMILAR MANNER TO A CRACK.

[B] SAME GAGE AS SKIN PLY BEING REPAIRED.

[C] SAME MATERIAL AND DENSITY AS DAMAGED CORE.

[D] CORE AND SKIN PLY SAME AS ORIGINAL. MAY BE MADE FROM SCRAP PANEL WITH ONE SKIN PLY REMOVED.

[E] THERE ARE NO STRUCTURAL LIMITATIONS ON THE SIZE OF REPAIRABLE DAMAGE. THE SIZE OF REPAIRABLE DAMAGE IS TO BE DETERMINED BY THE PRACTICABILITY OF MAKING A SATISFACTORY REPAIR WITH THE FACILITIES AVAILABLE.

REPAIR MATERIAL			
PART		QTY	MATERIAL
1	DOUBLER	A/R	CLAD 7075-T6 [B]
2	DOUBLER	A/R	CLAD 7075-T6 [B]
3	CORE	A/R	[C]
4	FILLER	A/R	[D]

REPAIR LIMITS FOR DAMAGE TO PANELS		
TYPE OF DAMAGE	LENGTH OR DIAMETER OF DAMAGE (INCHES)	DEPTH OF DAMAGE (INCHES)
PLY DELAMINATION	[E]	
CRACK OR HOLE	[E]	THROUGH FACE PLY
GOUGE	[E]	THROUGH FACE PLY INTO CORE
DENT OR DEPRESSION	[E]	0.25
HOLE	[E]	COMPLETELY THROUGH PANEL
SCRATCH	4	[A]

TABLE I

Metal Faced PVC, Balsa, and Nomex Core Floor Panel Repair
Figure 2 (Sheet 6)

BOEING PROPRIETARY - Copyright © - Unpublished Work - See title page for details.

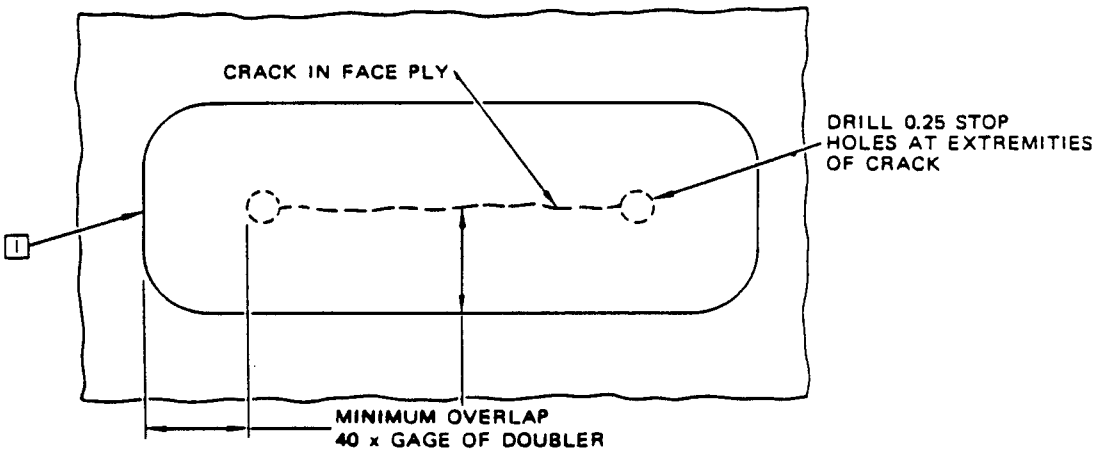

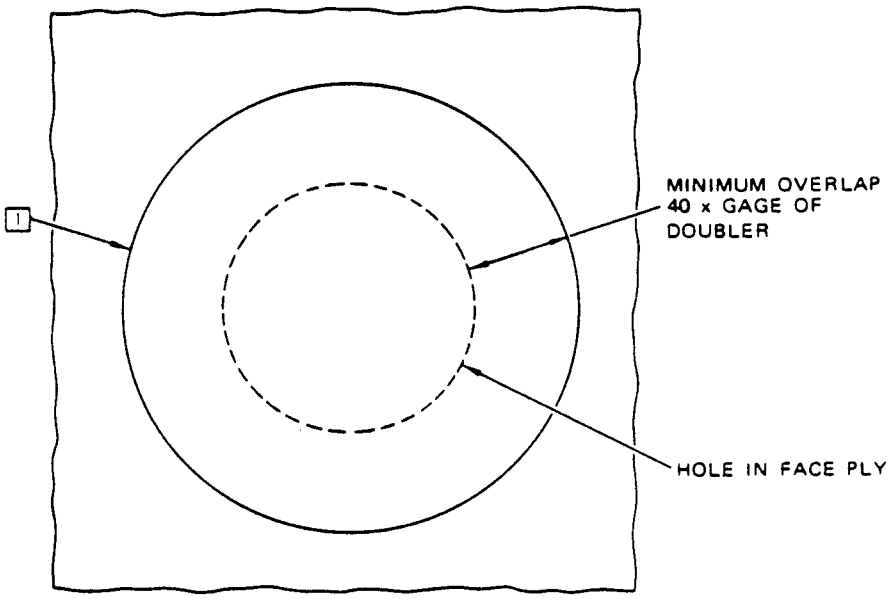

TYPICAL REPAIR TO HOLE OR CRACK IN FACE PLY

DETAIL I

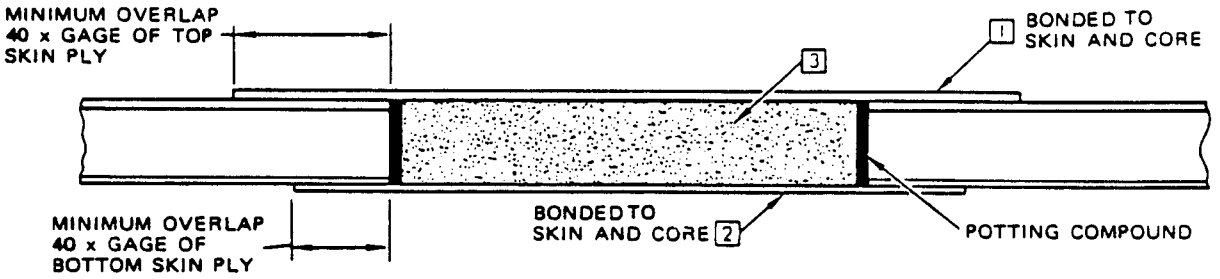

TYPICAL REPAIR TO FACE PLIES AND CORE
DETAIL II

Metal Faced PVC, Balsa, and Nomex Core Floor Panel Repair
Figure 2 (Sheet 8)

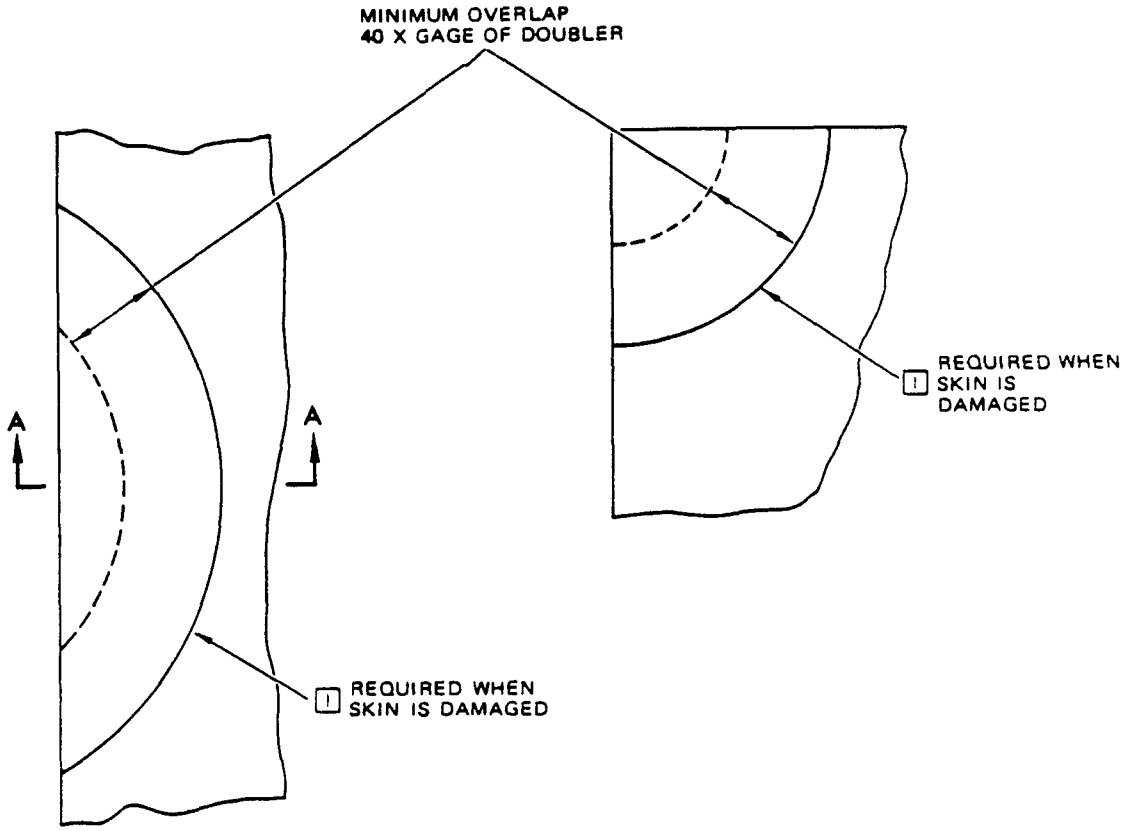

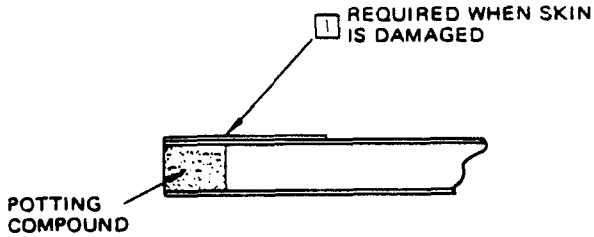

SECTION A–A

TYPICAL REPAIR TO CORE AT EDGE OF PANEL
DETAIL III

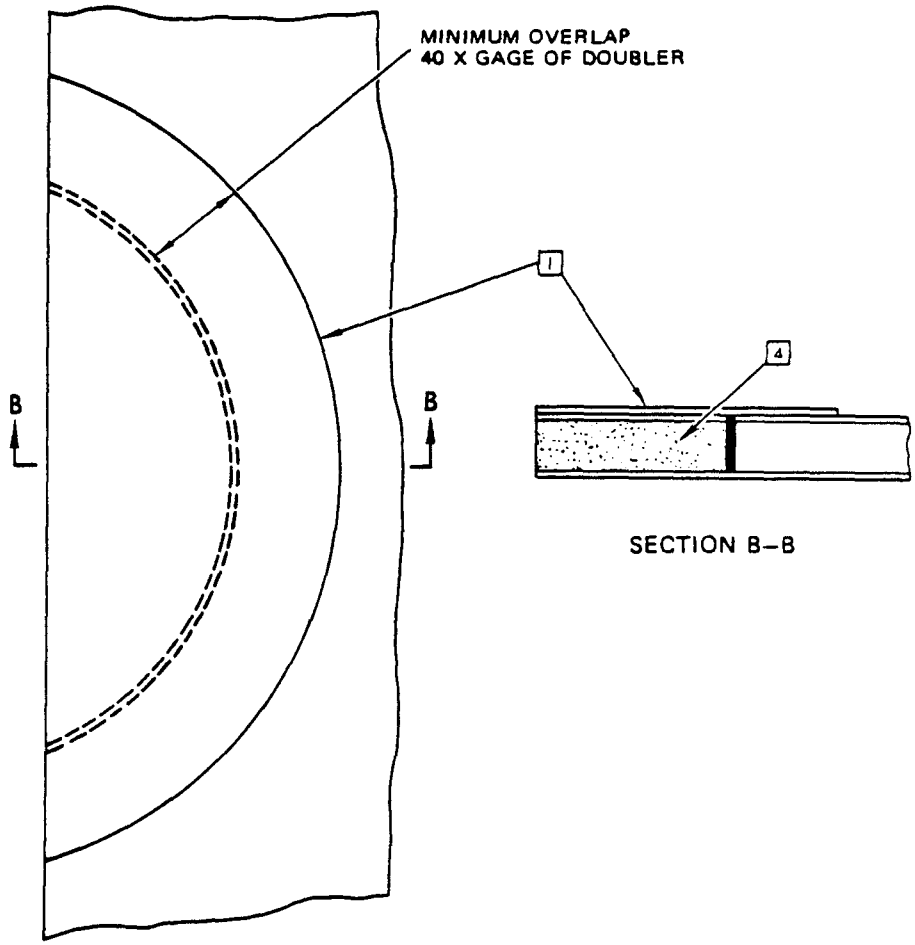

TYPICAL REPAIR TO CORE AND
FACE PLY AT EDGE OF PANEL

DETAIL IV

Metal Faced PVC, Balsa, and Nomex Core Floor Panel Repair
Figure 2 (Sheet 10)

REPAIR INSTRUCTIONS

1. General

   A. These procedures apply to fiberglass faced balsa, PVC, and Nomex core floor panels. See Table I for limitations on the size of repairs.

   B. Refer to par. 4 for preparation of resin mixes.

   C. Refer to Fig. 1 for preparation of BMS 5-28, Type 15 potting compound.

   NOTE: Panel must be dry before application of any repair materials.

2. Repairs

   A. Repair to one skin with undamaged core.

      (1) Carefully cut the damaged skin with a circular hole saw and remove the damaged portion, or if the skin is cracked, drill stop holes at the extremities as shown in Detail I.

      (2) Apply BMS 5-28, Type 15 potting compound to the exposed core. Use sufficient potting compound so that the top surface of the plug is slightly above the surface of the panel. Cure the compound 24 hours at 75°F to 80°F or 5 hours at 120°F to 130°F. Sand the potted area until it is flush with the surrounding skin.

      (3) Apply four plies of preimpregnated BMS 9-3, Type H-2 or H-3 fiberglass cloth to a damaged top skin or three plies to a damaged bottom skin as shown in Detail I. Refer to par. 3 for cleaning of the damaged area and preparation and application of fiberglass repair plies.

   B. Repair to one skin and core less than 1.0-inch diameter.

      (1) Remove the damage by cutting a circular hole not more than 1.0-inch diameter.

      (2) Fill the cavity in the core with BMS 5-28, Type 15 potting compound. Cure the compound 24 hours at 75°F to 85°F or 5 hours at 120°F to 130°F. Sand the potted area until it is flush with the surrounding skin.

      (3) Apply four plies of preimpregnated BMS 9-3, Type H-2 or H-3 fiberglass cloth to a damaged top skin or three plies to a damaged bottom skin as shown in Detail I. Refer to par. 3 for cleaning of the damaged area and preparation and application of fiberglass repair plies.

Fiberglass Faced PVC, Balsa, and Nomex Core Floor Panel Repair
Figure 3 (Sheet 1)

C. Repair to one skin and core greater than 1.0-inch diameter.

(1) Cut out the damaged area with a circular hole saw, taking care not to damage the opposite skin.

(2) Make a core plug from similar material to the original core, 0.060 to 0.125 inch smaller than the diameter of the hole, as shown in Detail II.

(3) Pot the core plug into the hole with BMS 5-28, Type 15 potting compound. Use sufficient potting compound so that the top surface of the plug is slightly above the surface of the panel. Cure the compound 24 hours at 75°F to 80°F or 5 hours at 120°F to 130°F. Sand the potting area until it is flush with the surrounding skin.

(4) Apply four plies of preimpregnated BMS 9-3, Type H-2 or H-3 fiberglass cloth to a damaged top skin or three plies to a damaged bottom skin as shown in Detail II. Refer to par. 3 for cleaning of the damaged area and preparation and application of fiberglass repair plies.

D. Repair to both skins and core.

(1) Where both skins and core are damaged, cut right through the panel with a circular hole saw.

(2) Repair the panel as described in par. 2.C. except that the fiberglass repair plies must be installed on both upper and lower skins.

E. Repairs to delaminated areas under 16 square inches in area.

NOTE: If is preferable to repair delamination by removal of the skin from the affected area as described in par. 2.A. Repair by adhesive injection as described in this paragraph is an optional alternative, except in the case of panels with Nomex core.

(1) Locate the void by coin tap or other suitable method.

(2) Drill a 0.125-inch diameter hole at each end of the void. Only one hole is required if the void extends to the edge of a panel.

(3) Prepare Resin Mix 1 as described in par. 4, and inject it into one hole until it comes out of the other hole or the panel edge.

(4) Fill the 0.125-inch diameter holes with Resin Mix 1 and finish off flush with the surrounding surface.

(5) Apply vacuum bag or 10 to 15 psi pressure and cure resin (par. 3).

Fiberglass Faced PVC, Balsa, and Nomex Core Floor Panel Repair
Figure 3 (Sheet 2)

F. Repair to edge delamination and damage to potting and core less than 1.0 inch deep and 3.0 inches long for PVC and balsa core panels.

(1) Install bolts and nuts in the spacers to ensure that the skins will not be separated from the spacers during the course of repair work.

(2) Insert a dull, clean spatula between the delaminated skin and the core to determine the extent of the damage.

(3) Prepare Resin Mix 1 as described in par. 4 and inject it into the damaged area with a syringe or sealant gun and clamp the edge firmly into shape.

(4) If the edge potting or core is damaged, fill it with BMS 5-28, Type 15 potting compound (Detail III).

(5) Where a skin has been damaged, apply four plies of preimpregnated BMS 9-3, Type H-2 or H-3, fiberglass cloth to the top skin or three plies to a damaged bottom skin as shown in Detail III. Refer to par. 3 for cleaning of the damaged area and preparation and application of fiberglass repair plies.

G. Repair to edge delamination and damage to potting and core greater than 1.0 inch deep and 3.0 inches long for PVC and balsa core panels.

(1) Insert bolts and nuts in the spacers in the vicinity of the damaged area to prevent further delamination during repair operations.

(2) Trim off damaged skin and remove damaged core to a distance at least 1.0 inch back from the edge of the panel. Carefully remove any spacers in the damaged area.

(3) Bond any delaminated areas back together as described in par. 2.F.(3).

(4) Bond a section of core with one skin attached, or and undamaged section of a scrap panel with one skin removed, into the trimmed area with BMS 5-28, Type 15 potting compound as shown in Detail IV. The attached skin should correspond to the removed skin of the panel being repaired. The maximum gap between the new and trimmed face sheet must be 0.06 inch.

(5) Apply four plies of BMS 9-3, Type H-2 or H-3, fiberglass cloth to a damaged top skin or three plies to a damaged bottom skin as shown in Detail IV. Refer to par. 3 for cleaning of the damaged area and preparation and application of fiberglass repair plies.

(6) Install new spacers where they were removed for repair.

Fiberglass Faced PVC, Balsa, and Nomex Core Floor Panel Repair
Figure 3 (Sheet 3)

H. Repair to edge delamination and damage to core for Nomex core panels.

(1) Insert bolts and nuts in the spacers in the vicinity of the damaged area to prevent further delamination during repair operations.

(2) Trim off delaminated skin and remove damaged portion of core. Carefully remove any spacers in the damaged area.

(3) Fill cavity in core with BMS 5-28, Type 15 potting compound. Cure the compound 24 hours at 75°F to 80°F or 5 hours at 120°F to 130°F. Sand the potted area flush with the surrounding skin and panel edge.

NOTE: If damage to core is extensive bond a section of core with one skin attached, or an undamaged section of a scrap panel with one skin removed, into the trimmed area with BMS 5-28, Type 15 potting compound as shown in Detail IV. The attached skin should correspond to the removed skin of panel being repaired. The maximum gap between the new and trimmed face sheet must be 0.06 inch.

(4) Apply four plies of preimpregnated BMS 9-3, Type H-2 or H-3, fiberglass cloth to a damaged top skin or three plies to a damaged bottom skin as shown in Detail IV. Refer to par. 3 for cleaning of the damaged area and preparation and application of fiberglass repair plies.

3. Application of Fiberglass Repair Plies

A. Lightly sand the area to be covered by the fiberglass repair plies and for 0.50 inch all around the area.

B. Clean the area with oil-free air.

C. Wipe the surfaces with a clean cloth moistened with solvent, Series 91 (Ref AMM/SOPM 20-30-91).

D. Cut a piece of BMS 9-3, Type H-2 or H-3 cloth of sufficient size to make the required number of repair plies.

E. Cut two pieces of parting film approximately 3 inches larger than the fiberglass cloth.

F. Spread Resin Mix 1 over one piece of parting film and place the fiberglass cloth on top of the resin. The weight of resin required is approximately equal to the weight of the cloth.

G. Lay the second piece of parting film on top of the fiberglass cloth and press the resin through the cloth with a squeegee or roller.

Fiberglass Faced PVC, Balsa, and Nomex Core Floor Panel Repair
Figure 3 (Sheet 4)

H. Cut the repair plies to the desired size.

I. Remove the parting film from one side of one of the repair plies. Apply the exposed side of the repair ply to the damaged panel and lightly squeegee over the remaining parting film to remove wrinkles and entrapped air. Take care not to apply excessive pressure on the squeegee or too much resin will be squeezed from the repair ply. After installation remove the top parting film.

J. Apply the remaining repair plies, one at a time, in the same manner as the first ply.

K. Seal a diaphragm of PVA film over the repair area using extruded sealing tape, incorporating a vacuum sniffer tube.

L. Attach a vacuum hose to the sniffer to evacuate the space under the film and maintain a minimum vacuum of 20 inches of mercury for the duration of the cure.

M. Cure the resin for approximately 10 to 12 hours at 70°F or 30 to 60 minutes at 200°F. Sweep the area with a squeegee to remove any air bubbles evident during the curing period.

N. After the resin has cured remove the PVA film and lightly sand the area with 180 grit sandpaper or equivalent.

O. Apply a coat of Sealer Resin over the repair area.

P. Allow the Sealer Resin to cure for a minimum of 24 hours at 70°F before using the panel.

4. Preparation of Resin Mixes

WARNING: THESE CHEMICALS CONTAIN TOXIC INGREDIENTS. PROVIDE ADEQUATE VENTILATION AND PROTECT THE SKIN AND EYES FROM CONTACT WITH UNCURED RESIN OR CURING AGENT. WEAR RUBBER GLOVES OVER COTTON GLOVES FOR PROTECTION OF HANDS. IF SKIN IS EXPOSED TO DIRECT CONTACT WITH UNCURED RESINS OR CURING AGENT WASH WITH SOAP AND WARM WATER. AVOID THE USE OF SOLVENTS FOR CLEANING THE SKIN.

A. Resin Mix 1

(1) Add 15 parts by weight of Epocast 9816 hardener to 100 parts by weight of Epocast 50A resin and mix thoroughly.

(2) Pot life of the mixture is approximately 45 to 60 minutes at 75°F.

Fiberglass Faced PVC, Balsa, and Nomex Core Floor Panel Repair
Figure 3 (Sheet 5)

B. Alternative Resin Mix 1

(1) Add 15 parts by weight of Epocast 8442B hardener to 100 parts by weight of Epocast 8442 Mod III resin and mix thoroughly.

(2) Pot life of the mixture is approximately 45 to 60 minutes at 75°F.

C. Sealer Resin

(1) Add 10 parts by weight of Epocast 941 hardener to 100 parts by weight of Epocast 156 resin and mix thoroughly.

(2) Pot life of the mixture is approximately 45 to 60 minutes at 70°F.

Fiberglass Faced PVC, Balsa, and Nomex Core Floor Panel Repair
Figure 3 (Sheet 6)

NOTES

- THIS REPAIR WILL NOT HAVE AN EFFECT ON A STRUCTURALLY SIGNIFICANT ITEM (SSI) GIVEN IN SRM 51-00-4, FIG. 3. THUS, NO CHANGE TO THE SUPPLEMENTAL STRUCTURAL INSPECTION DOCUMENT (SSID) INSPECTION PROGRAM IS NECESSARY.
- WHEN YOU DO THIS REPAIR, REFER TO:
  - SRM 51-20-3 FOR SOURCES OF NONMETALLIC REPAIR MATERIALS.

[A] SAND OUT SCRATCHES UP TO 0.015 INCH DEEP ON THE TOP FACE OR 0.010 INCH DEEP ON THE BOTTOM FACE WITH 180 GRIT OR FINER SANDPAPER. APPLY RESIN MIX 1 TO THE AFFECTED AREA AFTER REWORK. DEEPER SCRATCHES MUST BE REPAIRED IN A SIMILAR MANNER TO A CRACK.

[B] SAME MATERIAL AND DENSITY AS DAMAGED CORE

[C] CORE AND SKIN SAME AS THE INITIAL. MAY BE MADE FROM SCRAP PANEL WITH ONE SKIN REMOVED.

[D] THERE ARE NO STRUCTURAL LIMITATIONS ON THE SIZE OF REPAIRABLE DAMAGE. THE SIZE OF REPAIRABLE DAMAGE IS TO BE DETERMINED BY THE PRACTICABILITY OF MAKING A SATISFACTORY REPAIR WITH THE FACILITIES AVAILABLE.

REPAIR MATERIAL			
PART		QTY	MATERIAL
1	CORE	A/R	[B]
2	FILLER	A/R	[C]

REPAIR LIMITS FOR DAMAGE TO PANELS		
TYPE OF DAMAGE	LENGTH OR DIAMETER OF DAMAGE (INCHES)	DEPTH OF DAMAGE (INCHES)
PLY DELAMINATION	[D]	
CRACK OR HOLE	[D]	THROUGH FACE PLY
GOUGE	[D]	THROUGH FACE PLY INTO CORE
HOLE	[D]	COMPLETELY THROUGH PANEL
SCRATCH		[A]

4

TABLE I

Fiberglass Faced PVC, Balsa, and Nomex Core Floor Panel Repair
Figure 3 (Sheet 7)

BOEING PROPRIETARY - Copyright © - Unpublished Work - See title page for details.

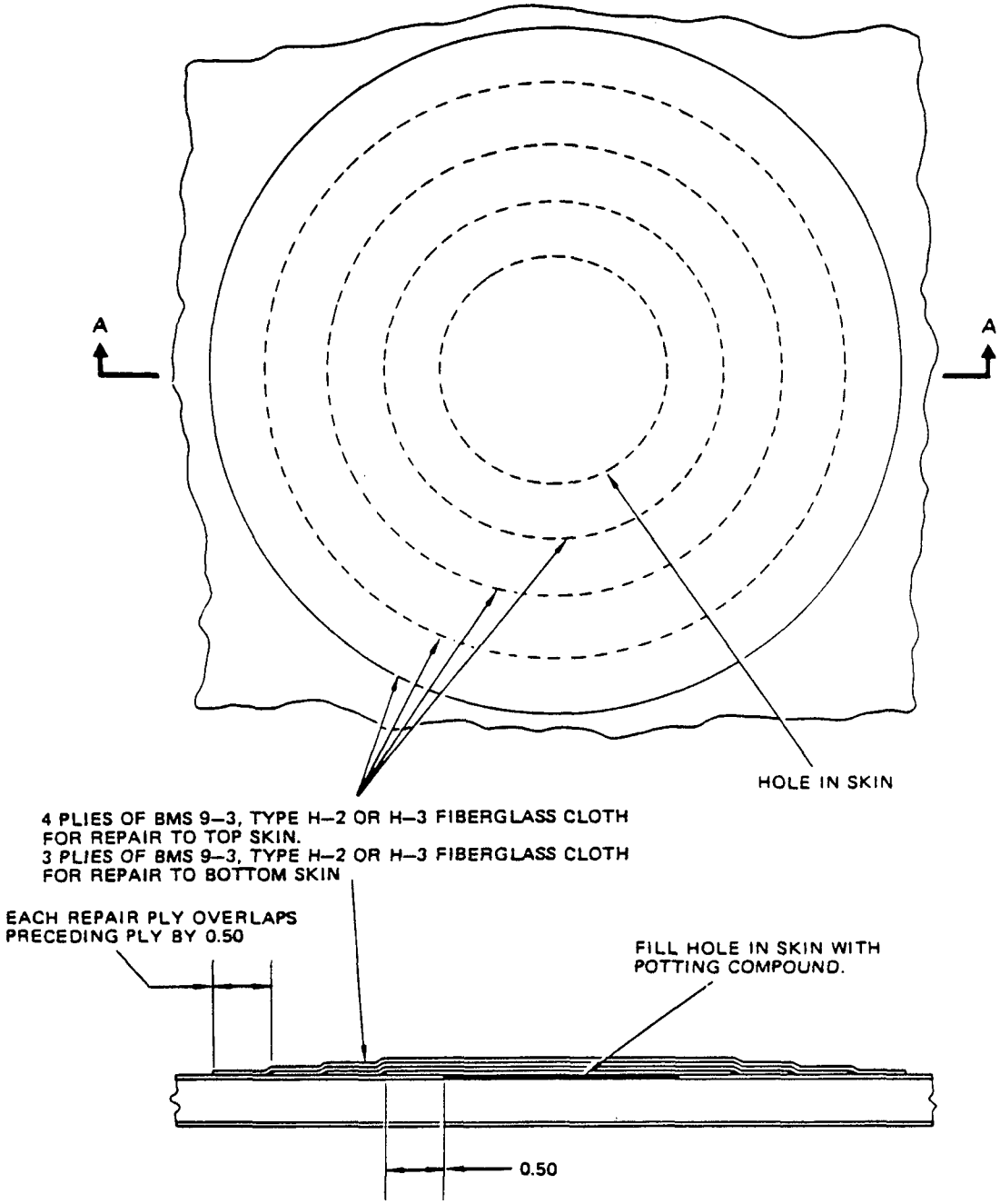

SECTION A-A

TYPICAL REPAIR TO HOLE OR CRACK IN SKIN
DETAIL I

Fiberglass Faced PVC, Balsa, and Nomex Core Floor Panel Repair
Figure 3 (Sheet 9)

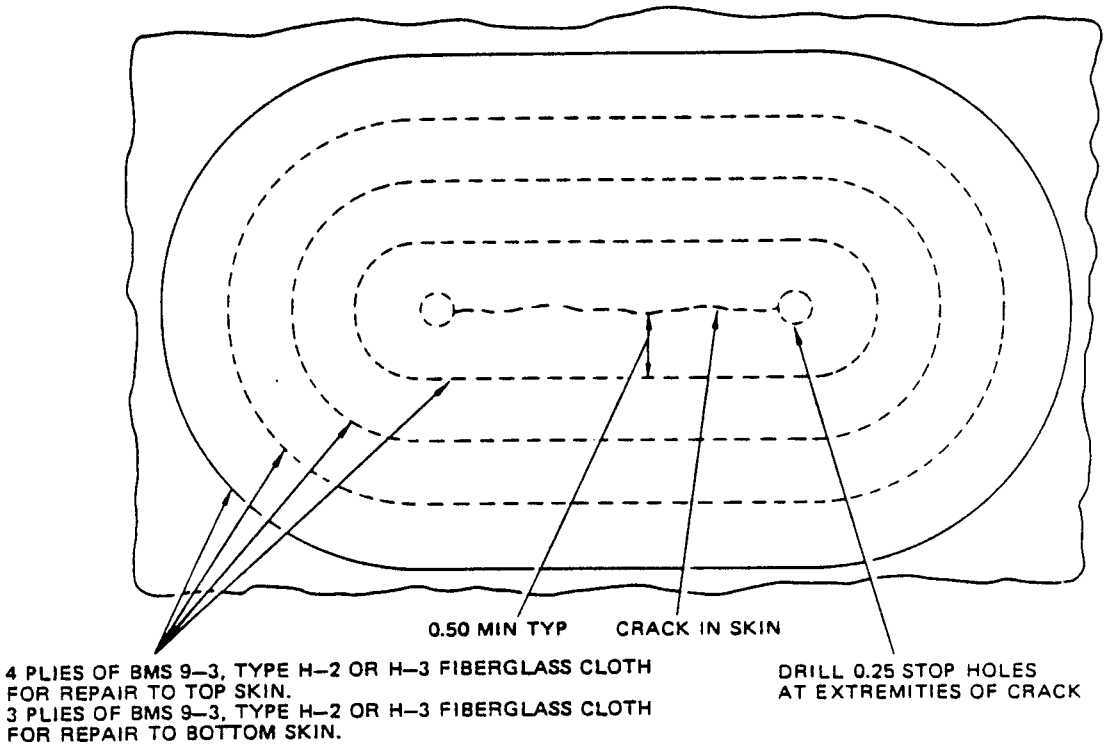

TYPICAL REPAIR TO CRACK IN SKIN
DETAIL I (CONT)

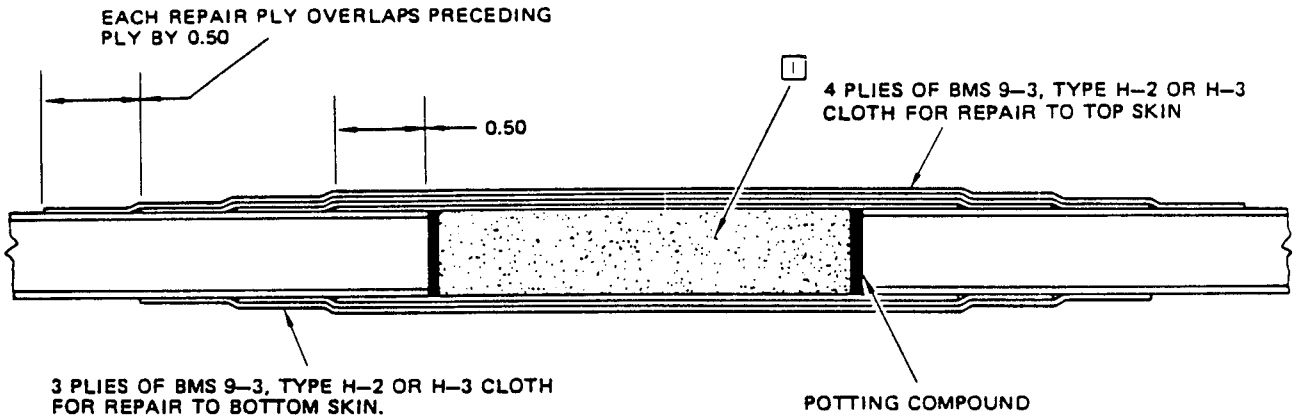

TYPICAL REPAIR TO SKIN AND CORE
DETAIL II

Fiberglass Faced PVC, Balsa, and Nomex Core Floor Panel Repair
Figure 3 (Sheet 10)

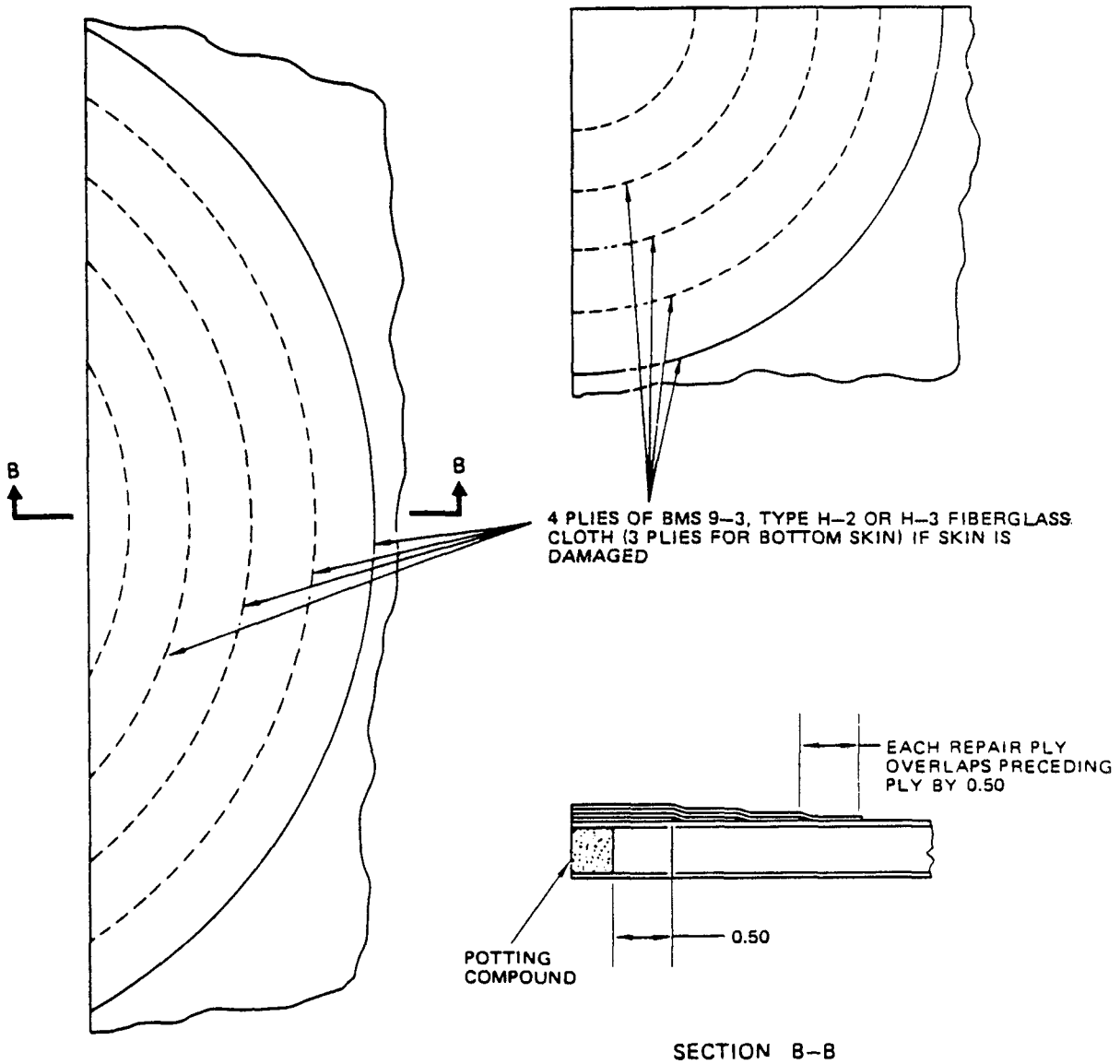

TYPICAL REPAIR TO CORE AT EDGE OF PANEL
DETAIL III

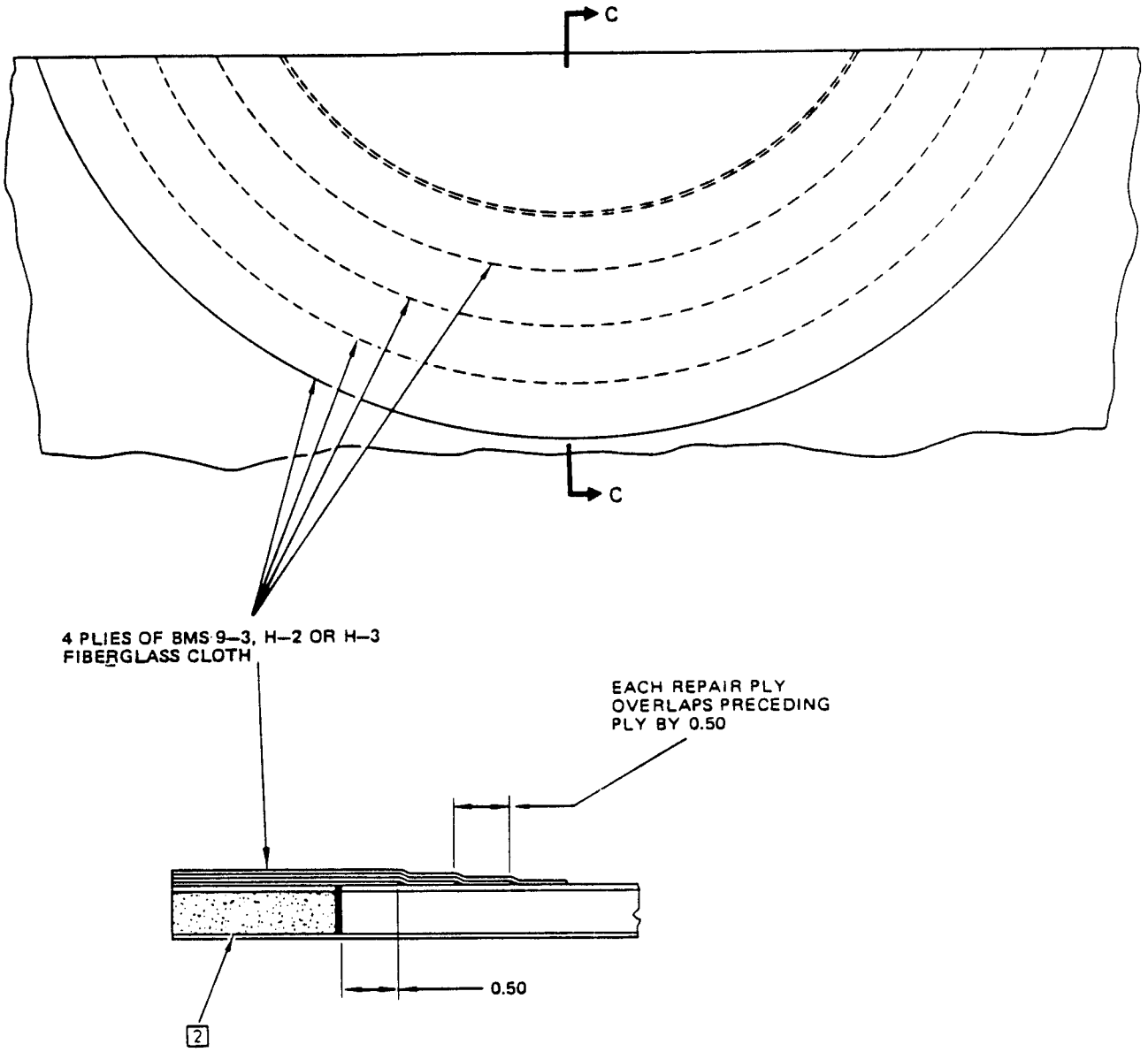

SECTION C-C

TYPICAL REPAIR TO SKIN AND CORE AT EDGE OF PANEL
DETAIL IV

Fiberglass Faced PVC, Balsa, and Nomex Core Floor Panel Repair
Figure 3 (Sheet 12)

APPLICABILITY

THIS REPAIR IS APPLICABLE TO ALL CARGO AIRPLANES WITH ZEE FLOORING BETWEEN STA 360 AND STA 887.

REPAIR INSTRUCTIONS

1. Return the face plate to such a shape that the repair plate will lie flat.
2. Make the repair part and drill the fastener holes.
3. Apply a chemical conversion coating to the bare surfaces of the initial and repair parts and the fastener holes.
4. Install the repair plate. Use a BMS 5-95 mating surface seal.
5. Apply the finish as given in AMM 51-21.

NOTES

- THIS REPAIR WILL NOT HAVE AN EFFECT ON A STRUCTURALLY SIGNIFICANT ITEM (SSI) GIVEN IN SRM 51-00-4, FIG. 3. THUS, NO CHANGE TO THE SUPPLEMENTAL STRUCTURAL INSPECTION DOCUMENT (SSID) INSPECTION PROGRAM IS NECESSARY.
- BREAK ALL SHARP EDGES 0.015 TO 0.005 INCH R.
- REFER TO SRM 51-10-02 FOR PROTECTIVE TREATMENT OF METALS.
- REFER TO SRM 51-20-3 FOR SOURCES OF NONMETALLIC REPAIR MATERIALS.
- REFER TO SRM 51-30 FOR FASTENER CODE, REMOVAL AND INSTALLATION, HOLE SIZES AND EDGE MARGINS.

FASTENER SYMBOLS

NAS1738E5 BLIND RIVETS (OR NAS1739E5 IN AREAS OF INTERFERENCE)

BACR15BB5D SOLID RIVETS (OR BACR15CE5D IN AREAS OF INTERFERENCE)

REPAIR MATERIALS			
PART		QTY	MATERIAL
1	PLATE	1	0.040 INCH THICK CLAD 7075-T6

Main Deck Zee Flooring - Repair for Damaged Face Plate
Figure 4 (Sheet 1)

BOEING PROPRIETARY - Copyright © - Unpublished Work - See title page for details.

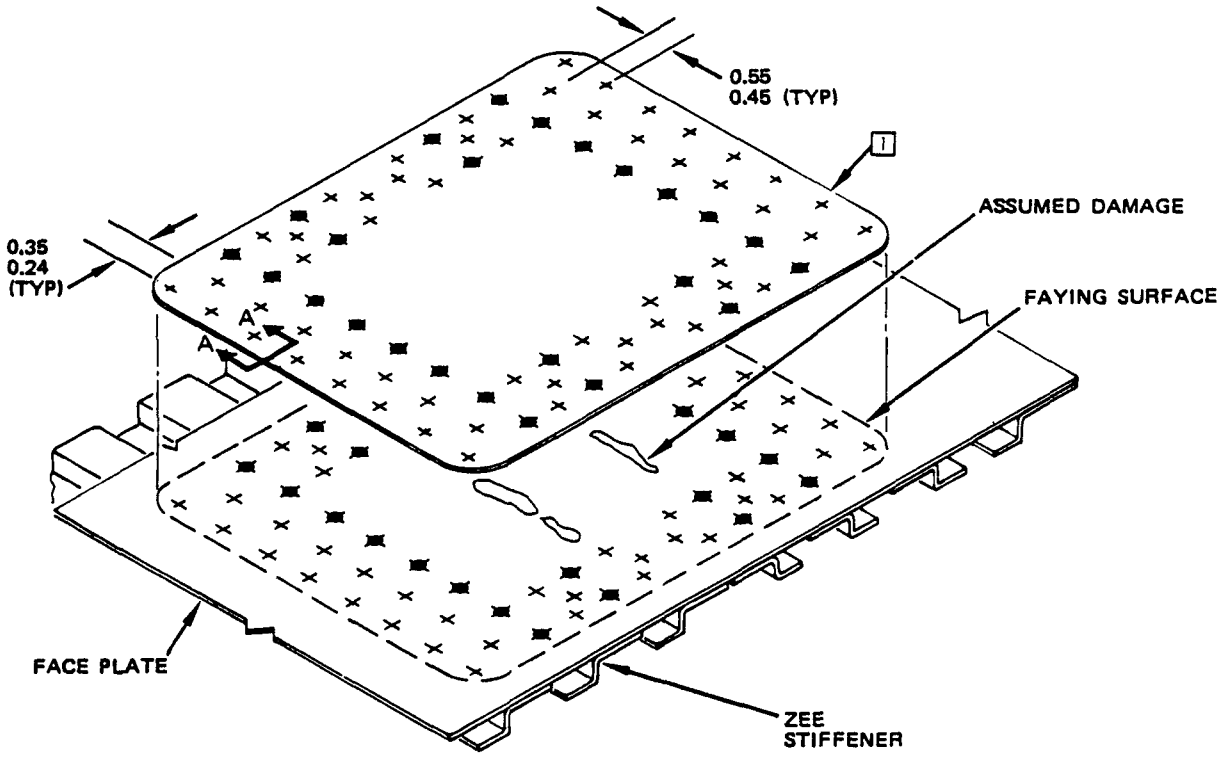

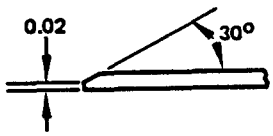

SECTION A–A
TYPICAL CHAMFER

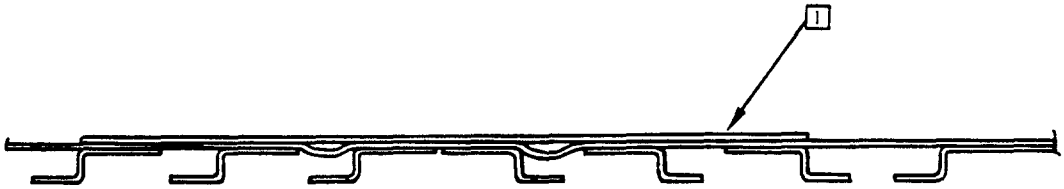

SECTION THROUGH DAMAGE

Main Deck Zee Flooring - Repair for Damaged Face Plate
Figure 4 (Sheet 2)

APPLICABILITY

THIS REPAIR IS APPLICABLE TO ALL CARGO AIRPLANES WITH ZEE FLOORING BETWEEN STA 360 AND STA 887.

FASTENER SYMBOLS

NAS1738E5 BLIND RIVETS (OR NAS1739E5 IN AREAS OF INTERFERENCE)

BACR15BB5D SOLID RIVETS (OR BACR15CE5D IN AREAS OF INTERFERENCE)

REPAIR INSTRUCTIONS

1. Return the face plate to such a shape that the repair plate will lie flat. Spotface the spotwelds to a maximum depth of the skin minus 0.055 inch in the area of the face plate to be cut out. Cut out the damaged skin taking care not to cut the zee stiffeners. Break the skin loose from the stiffeners and microshave any remaining weld nuggts attached to the stiffeners.
2. Make the repair parts and drill the fastener holes.
3. Apply a chemical conversion coating to the bare surfaces of the reworked and repair parts.
4. Install the repair parts. Use a BMS 5-95 mating surface seal.
5. Apply the finish as given in AMM 51-21.

REPAIR MATERIAL

PART		QTY	MATERIAL
1	PLATE	1	0.040 INCH THICK CLAD 7075-T6
2	FILLER	AS NEEDED	CLAD 7075-T6 THAT IS THE SAME GAGE AS THE FACE PLATE
3	FILLER	AS NEEDED	CLAD 7075-T6 THAT IS THE SAME GAGE AS THE FACE PLATE

NOTES

- THIS REPAIR WILL NOT HAVE AN EFFECT ON A STRUCTURALLY SIGNIFICANT ITEM (SSI) GIVEN IN SRM 51-00-4, FIG. 3. THUS, NO CHANGE TO THE SUPPLEMENTAL STRUCTURAL INSPECTION DOCUMENT (SSID) INSPECTION PROGRAM IS NECESSARY.
- BREAK ALL SHARP EDGES 0.015 TO 0.005 INCH R.
- REFER TO SRM 51-10-02 FOR PROTECTIVE TREATMENT OF METALS.
- REFER TO SRM 51-20-3 FOR SOURCES OF NONMETALLIC REPAIR MATERIALS.
- REFER TO SRM 51-30 FOR FASTENER CODE, REMOVAL AND INSTALLATION, HOLE SIZES AND EDGE MARGINS AND COUNTERSINKING.

Main Deck Zee Flooring - Repair for Damaged Face Plate in Zee Stiffener Area
Figure 5 (Sheet 1)

BOEING PROPRIETARY - Copyright © - Unpublished Work - See title page for details.

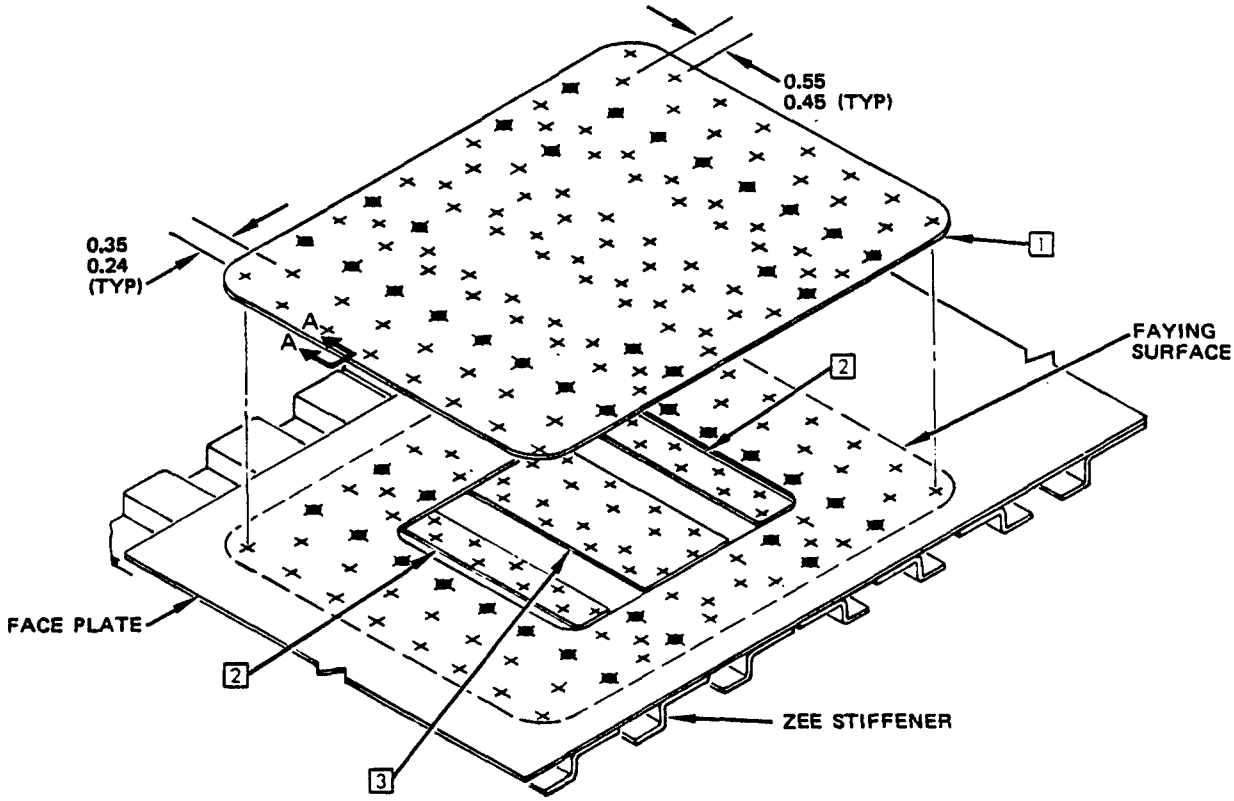

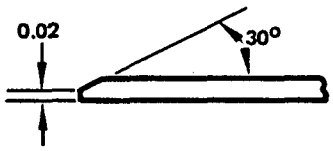

SECTION A–A
TYPICAL CHAMFER

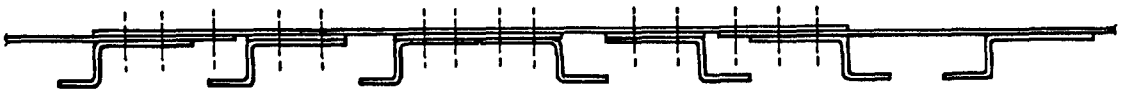

SECTION THROUGH DAMAGE

Main Deck Zee Flooring - Repair for Damaged Face Plate
Figure 5 (Sheet 2)

APPLICABILITY

THIS REPAIR IS APPLICABLE TO ALL CARGO AIRPLANES WITH ZEE FLOORING BETWEEN STA 360 AND STA 887.

REPAIR INSTRUCTIONS

1. Drill stop holes at the ends of the crack. (Refer to SRM 51-10-1).
2. Make the repair parts and drill the fastener holes.
3. Apply a chemical conversion coating to all the bare surfaces of the initial and repair parts.
4. Install the repair parts. Use BMS 5-95 to make a mating surface seal.
5. Apply the finish as given in AMM 51-21.

NOTES

- THIS REPAIR WILL NOT HAVE AN EFFECT ON A STRUCTURALLY SIGNIFICANT ITEM (SSI) GIVEN IN SRM 51-00-4, FIG. 3. THUS, NO CHANGE TO THE SUPPLEMENTAL STRUCTURAL INSPECTION DOCUMENT (SSID) INSPECTION PROGRAM IS NECESSARY.
- BREAK ALL SHARP EDGES 0.015 TO 0.005 INCH R.
- REFER TO SRM 51-10-02 FOR PROTECTIVE TREATMENT OF METALS.
- REFER TO SRM 51-20-3 FOR SOURCES OF NONMETALLIC REPAIR MATERIALS.
- REFER TO SRM 51-30 FOR FASTENER CODE, REMOVAL AND INSTALLATION, HOLE SIZES AND EDGE MARGINS AND COUNTERSINKING.

[A] FOLLOW SPOTWELD PATTERN FOR SPACING.

[B] MINIMUM OF THREE ROWS OF FASTENERS EACH SIDE OF DAMAGE

[C] IN AREAS OF INTERFERENCE WITH PROTRUDING HEAD RIVETS, USE BACR15ED FLUSH HEAD RIVETS.

REPAIR MATERIAL			
PART		QTY	MATERIAL
[1]	ANGLE	1	0.036 INCH THICK CLAD 7075-T6
[2]	ANGLE	1	0.036 INCH THICK CLAD 7075-T6

Main Deck Zee Flooring - Repair for Zee Stiffener
Figure 6 (Sheet 1)

BOEING PROPRIETARY - Copyright © - Unpublished Work - See title page for details.

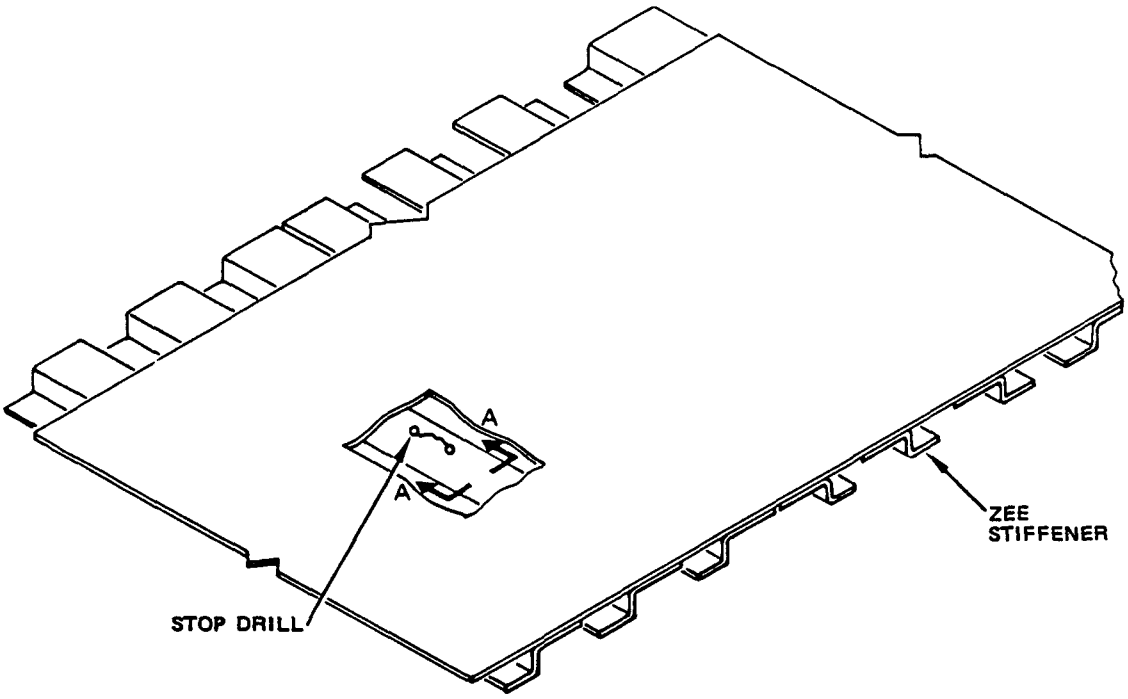

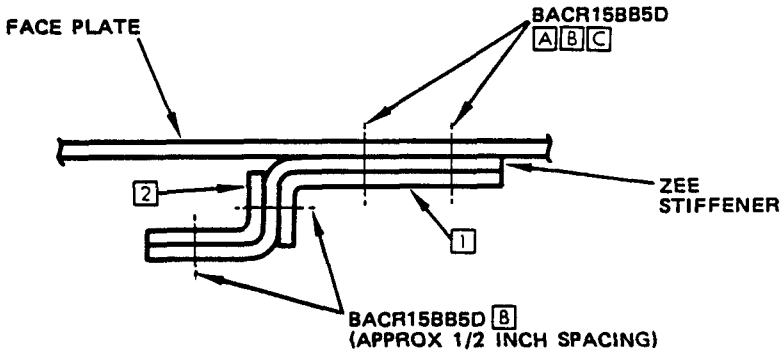

SECTION A–A
TYPICAL ZEE REPAIR

Main Deck Zee Flooring - Repair for Zee Stiffener
Figure 6 (Sheet 2)

APPLICABILITY

THIS REPAIR IS APPLICABLE TO ALL CARGO AIRPLANES WITH ZEE FLOORING BETWEEN STA 360 AND STA 887.

REPAIR INSTRUCTIONS

1. Drill holes at the pulled spotweld locations for fasteners to replace the pulled spotwelds.
2. Apply a chemical conversion coating to all of the bare surfaces.
3. Install the fasteners.
4. Apply the finish as given in AMM 51-21.

NOTES

- THIS REPAIR WILL NOT HAVE AN EFFECT ON A STRUCTURALLY SIGNIFICANT ITEM (SSI) GIVEN IN SRM 51-00-4, FIG. 3. THUS, NO CHANGE TO THE SUPPLEMENTAL STRUCTURAL INSPECTION DOCUMENT (SSID) INSPECTION PROGRAM IS NECESSARY.
- BREAK ALL SHARP EDGES 0.015 TO 0.005 INCH R.
- REFER TO SRM 51-10-02 FOR PROTECTIVE TREATMENT OF METALS.
- REFER TO SRM 51-20-3 FOR SOURCES OF NONMETALLIC REPAIR MATERIALS.
- REFER TO SRM 51-30 FOR FASTENER CODE, REMOVAL AND INSTALLATION, HOLE SIZES AND EDGE MARGINS AND COUNTERSINKING.

Main Deck Zee Flooring - Repair for Pulled Spotwelds
Figure 7 (Sheet 1)

BOEING PROPRIETARY - Copyright © - Unpublished Work - See title page for details.

PLAN VIEW
TYPICAL SPOTWELD LOCATIONS

Main Deck Zee Flooring - Repair for Pulled Spotwelds
Figure 7 (Sheet 2)

APPLICABILITY

THIS REPAIR IS APPLICABLE TO AIRPLANES WITH FLOOR PANELS THAT HAVE HAT SHAPE STIFFENERS BETWEEN BS 270 AND BS 1016.

REPAIR INSTRUCTIONS

1. Get access to the damaged area.
2. Drill a fastener hole through the face plate and the stiffener at the location of each damaged spot weld.
3. Remove the nicks, scratches, gouges, burrs and sharp edges from the initial parts.
4. Apply a chemical conversion coating to the bare surfaces of the initial parts. Refer to SRM 51-10-2.
5. Install one layer of BMS 10-11, Type I primer to the bare surfaces of the initial parts. Refer to SOPM 20-41-02.
6. Install the fasteners. Install a BACR15BB5D rivet or BACR15CE5D rivet.
7. Apply one layer of BMS 10-11, Type II finish to the repair area. Refer to SOPM 20-41-02.
8. Apply a layer of BMS 3-23 corrosion inhibiting compound to the repair area. Refer to SRM 51-10-2.

NOTES

- THIS REPAIR WILL NOT HAVE AN EFFECT ON A STRUCTURALLY SIGNIFICANT ITEM (SSI) GIVEN IN SRM 51-00-4, FIG. 3. THUS, NO CHANGE TO THE SUPPLEMENTAL STRUCTURAL INSPECTION DOCUMENT (SSID) INSPECTION PROGRAM IS NECESSARY.
- WHEN YOU USE THIS REPAIR REFER TO:
  - SOPM 20-41-02 FOR APPLICATION OF FINISHES
  - SRM 51-10-1 FOR DAMAGE CLASSIFICATION
  - SRM 51-10-2 FOR PROTECTIVE TREATMENT OF METALLIC AND GRAPHITE MATERIALS
  - SRM 51-20-4 FOR REPAIR SEALING
  - SRM 51-30 FOR FASTENER CODE, INSTALLATION AND REMOVAL, HOLE SIZES AND EDGE MARGINS.

Main Deck Floors With Hat Shape Stiffeners - Repair for Damaged Spot Welds
Figure 8 (Sheet 1)

BOEING PROPRIETARY - Copyright © - Unpublished Work - See title page for details.

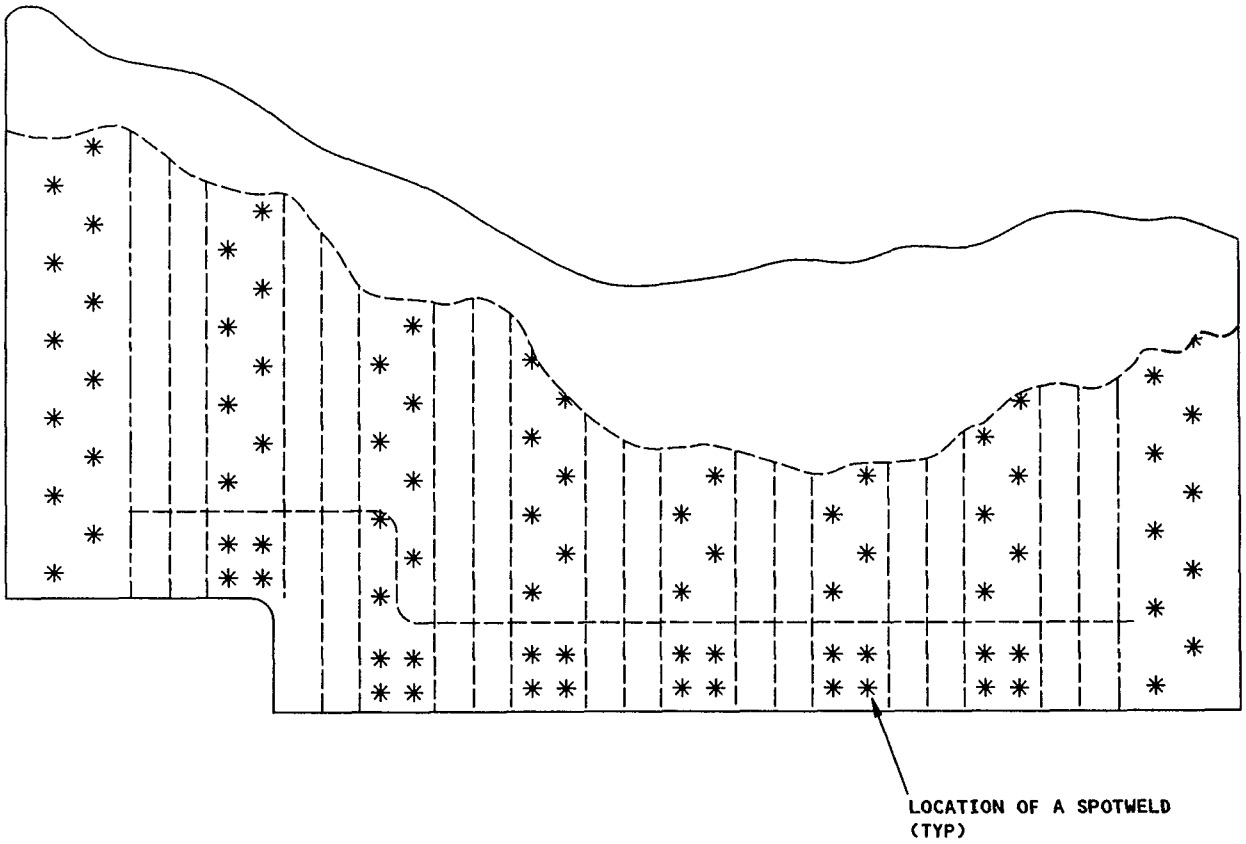

PLAN VIEW

Main Deck Floors with Hat Shape Stiffeners - Repair for Damaged Spotwelds
Figure 8 (Sheet 2)

Figures 9 and 10 have been moved. Refer to 53-10-13, Figures 1 and 2 for Section 46 cargo compartment floor panel support zee repairs.

APPLICABILITY
THE ALLOWABLE DAMAGE LIMITS GIVEN IN THIS FIGURE ARE APPLICABLE TO AIRPLANES WITH ZEE FLOORING BETWEEN STA 360 AND STA 887.

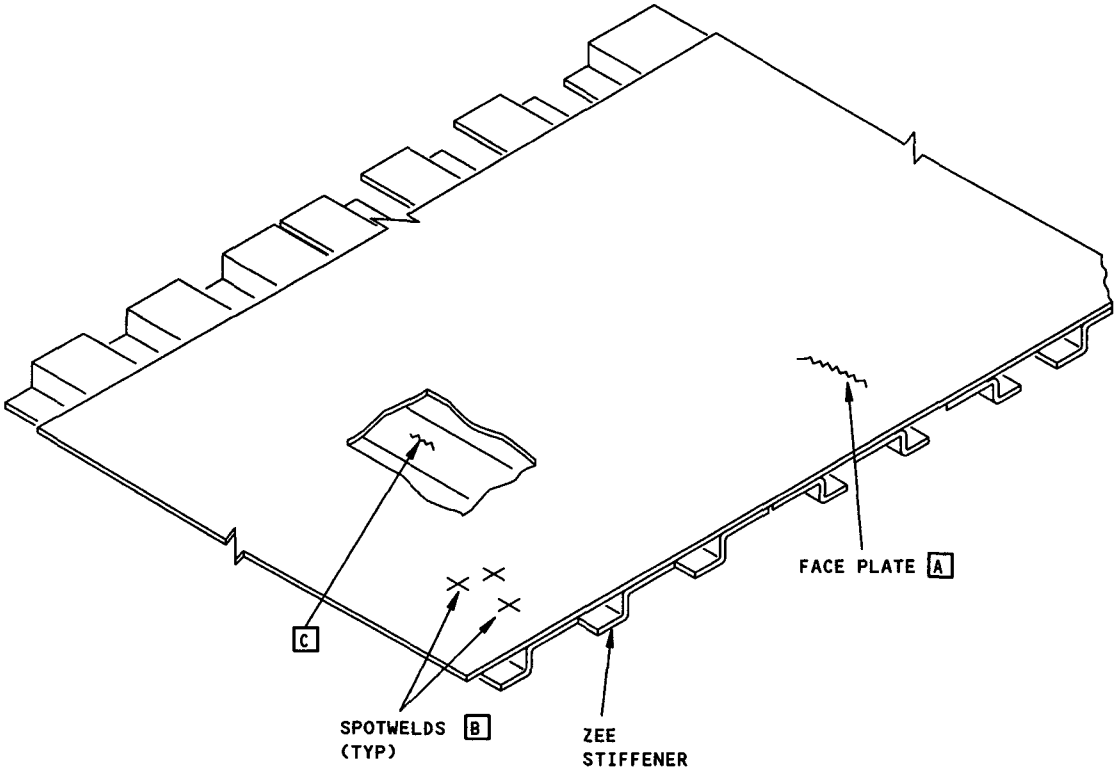

NOTES

- THE ALLOWABLE DAMAGE LIMITS GIVEN IN THIS FIGURE WILL NOT HAVE AN EFFECT ON A STRUCTURALLY SIGNIFICANT ITEM (SSI) GIVEN IN SRM 51-00-4, FIG. 3. THUS, NO CHANGE TO THE SUPPLEMENTAL STRUCTURAL INSPECTION DOCUMENT (SSID) INSPECTION PROGRAM IS NECESSARY.

A GOUGES THAT DO NOT GO THROUGH THE FULL DEPTH OF THE FACE PLATE ARE PERMITTED.

B NO MORE THAN TWO ADJACENT PULLED SPOTWELDS ARE PERMITTED.

C CRACKS IN ZEE STIFFENERS NOT PERMITTED.

Main Deck Zee Flooring - Allowable Damage
Figure 1

BOEING PROPRIETARY - Copyright © - Unpublished Work - See title page for details.

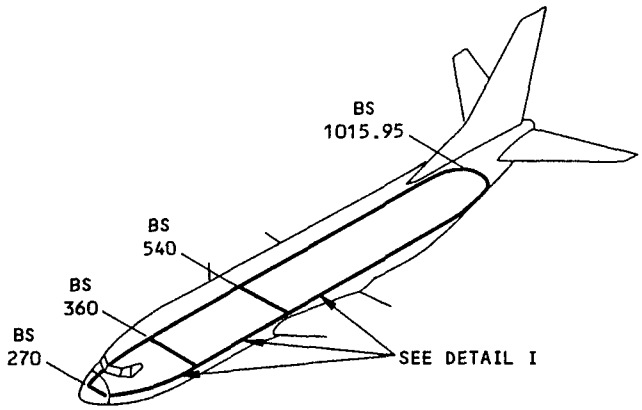

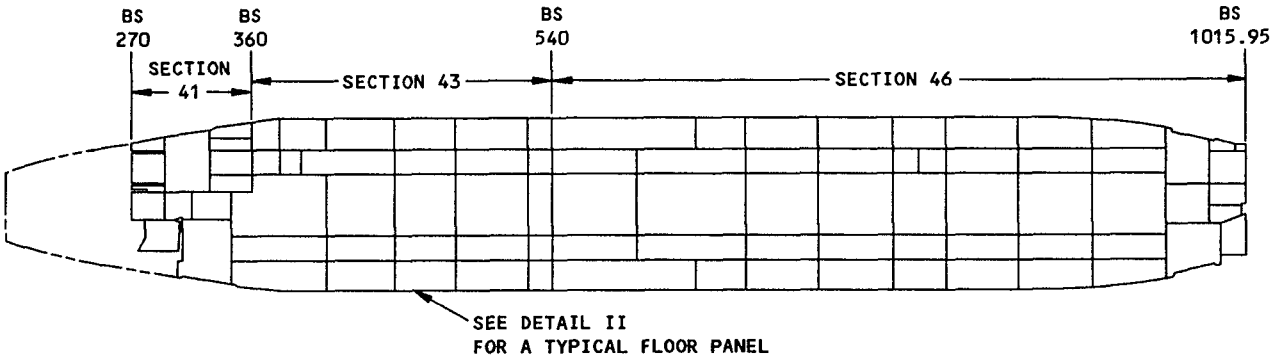

BASIC FLOOR PANEL ARRANGEMENT
DETAIL I

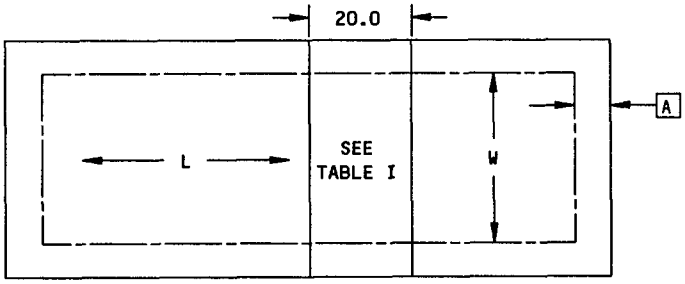

TYPICAL FLOOR PANEL
PLAN VIEW
DETAIL II

Main Deck Floor Panel Allowable Damage
Figure 2 (Sheet 1)

ALLOWABLE DAMAGE FOR ANY 20.0 INCH LENGTH (FORE AND AFT)		
DENTS	HOLES	DELAMINATION
UP TO 4 SQUARE INCHES [B]	UP TO 4 SQUARE INCHES	UP TO 4 SQUARE INCHES
ONLY ONE OF THE ABOVE ALLOWED PER 20.0 INCH LENGTH		

TABLE I

NOTES

- THE ALLOWABLE DAMAGE LIMITS GIVEN IN THIS FIGURE WILL NOT HAVE AN EFFECT ON A STRUCTURALLY SIGNIFICANT ITEM (SSI) GIVEN IN SRM 51-00-4, FIG. 3. THUS, NO CHANGE TO THE SUPPLEMENTAL STRUCTURAL INSPECTION DOCUMENT (SSID) INSPECTION PROGRAM IS NECESSARY.
- REFER TO SRM 51-10-01 FOR INVESTIGATION AND CLEANUP OF DAMAGE.
- REFINISH REWORKED AREAS AS GIVEN IN SOPM 20-41-02.
- THE ALLOWABLE DAMAGE CRITERIA STATED HEREIN APPLIES TO STRUCTURAL INTEGRITY ONLY AND SHOULD NOT BE USED WHERE FLOOR PANEL FUNCTIONAL UTILITY WOULD BE IMPAIRED.
- PANEL ARRANGEMENT SHOWN IS FOR BASIC CONFIGURATION. FLOOR PANEL ARRANGEMENT, MATERIALS AND/OR CONSTRUCTION MAY VARY WITH OPERATORS' OPTION. ALLOWABLE DAMAGE FOR EACH OPERATOR OPTION IS THE SAME AS FOR THE BASIC CONFIGURATION FOR SIMILAR TYPE MEMBERS. FOR EXAMPLE, ALL FIBERGLASS FACED PANELS WITH NOMEX CORE ARE COVERED BY THE SAME ALLOWABLE DAMAGE LIMITS, REGARDLESS OF WHETHER THEY ARE PART OF THE BASIC CONFIGURATION OR PART OF A CUSTOMER'S OPTIONAL CONFIGURATION. REFER TO SRM 53-20-1 FOR FLOOR PANEL IDENTIFICATION FOR THE BASIC CONFIGURATION. ALSO, SEE SRM 53-20-1 FOR A LIST OF REFERENCE DRAWINGS FOR BOTH BASIC AND OPTIONAL CONFIGURATIONS.

[A] NO DAMAGE ALLOWED WITHIN 3.00 INCHES OF THE EDGE OR THE PANEL CUTOUT.

[B] FOR TYPE I PANELS ONLY, DENTS UP TO 2.0 INCHES IN WIDTH (IN THE FORWARD AND AFT DIRECTION) AND THE WIDTH OF THE SEAT IN LENGTH ARE PERMITTED. DENTS CAN NOT BE MORE THAN 0.15 INCHES DEEP. DENTS ARE NOT PERMITTED LESS THAN 1 INCH FROM THE EDGE OF THE PANEL OR A CUTOUT.

Main Deck Floor Panel Allowable Damage
Figure 2 (Sheet 2)

BOEING PROPRIETARY - Copyright © - Unpublished Work - See title page for details.

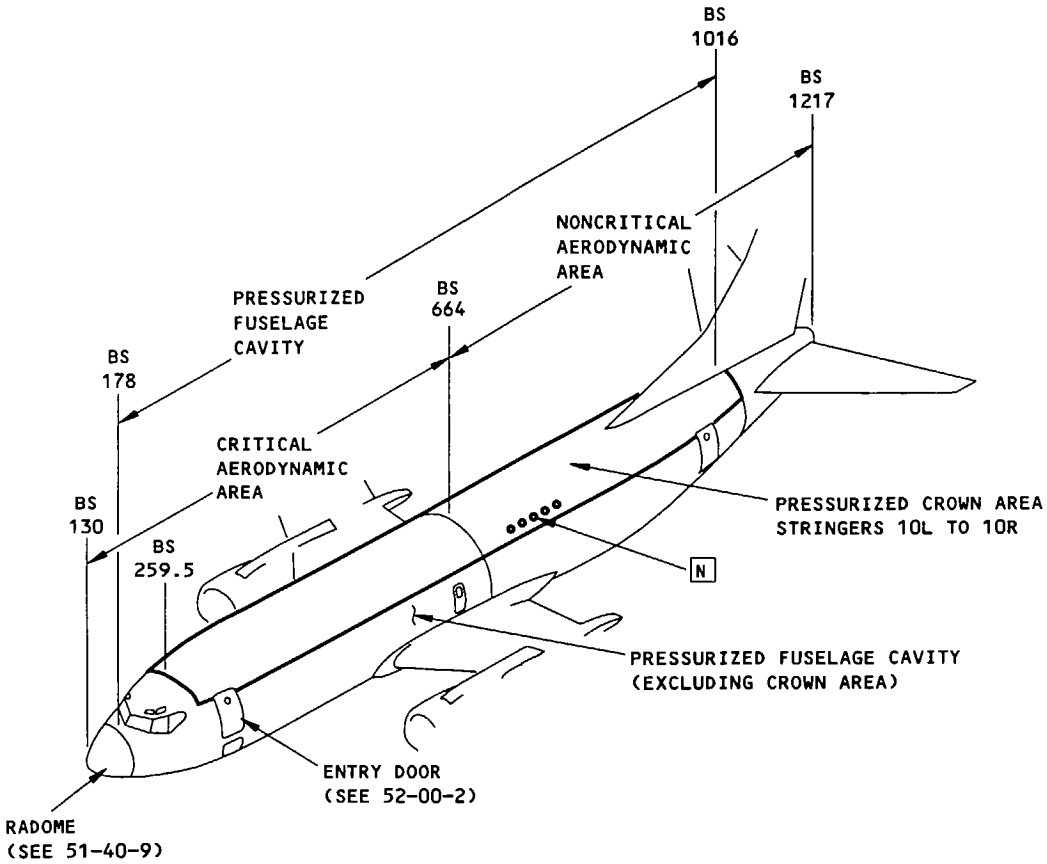

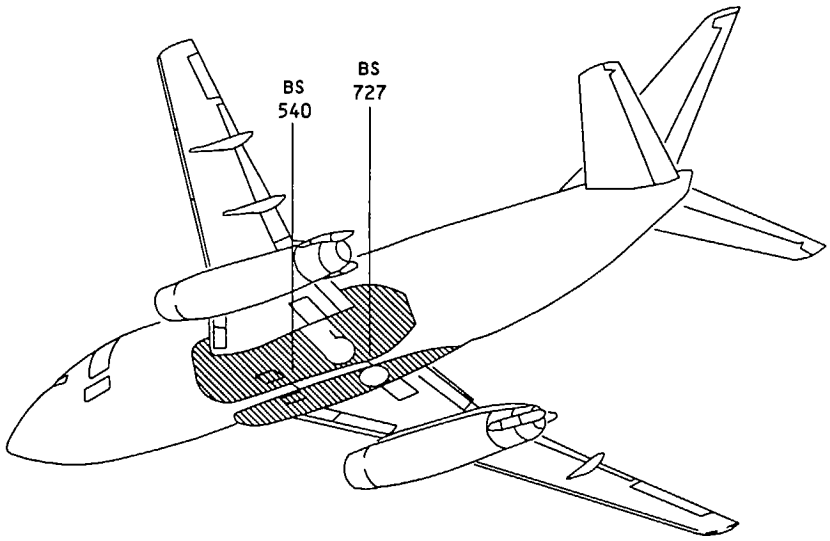

Fuselage Skin Allowable Damage
Figure 1 (Sheet 1)

BOEING PROPRIETARY - Copyright © - Unpublished Work - See title page for details.

DESCRIPTION	CRACKS	NICKS, GOUGES, CORROSION, AND SCRATCHES EXCLUDING LONGITIDUNAL SCRATCHES WITHIN ZONE C (SEE DETAIL XI)	DENTS	HOLES AND PUNCTURES	WRINKLES OR BUCKLES	SCRIBE LINES [Z]	LONGITIDUNAL SCRATCHES WITHIN ZONE C (SEE DETAIL XI)
PRESSURIZED FUSELAGE CROWN AREA EXCLUDING LAP AND BUTT SPLICE AREAS (S-10L TO S-10R)	[C]	[D] [I] [J] [M] [U] [X]	SEE DETAIL III [K] [L] [V]	NOT PERMITTED	[O]	[D] [J] [AB] [AC] [X]	NOT APPLICABLE
PRESSURIZED FUSELAGE CAVITY EXCLUDING CROWN AREA, AND EXCLUDING LAP AND BUTT SPLICE AREAS [B]	[C]	[D] [I] [J] [U] [M] [X]	SEE DETAIL III [K] [L] [V]	NOT PERMITTED	[G] [H]	[D] [J] [AB] [AC] [X]	NOT APPLICABLE
PRESSURIZED FUSELAGE LAP SPLICE AND BUTT JOINT AREAS	NOT PERMITTED	[AA]	NOT PERMITTED	NOT PERMITTED	NOT PERMITTED	[X] [Y]	[X] [Y]
UNPRESSURIZED FUSELAGE FROM BS 1016.00 TO BS 1217.00	[C]	[D] [I] [J] [U] [M]	SEE DETAIL III [K] [L]	[E]	[O]	[D] [J] [U]	[D] [J] [U]

ALLOWABLE DAMAGE FOR FUSELAGE SKIN [A] [F]
TABLE I

NOTES

- DAMAGE, SUCH AS BLENDOUTS, TRIMOUTS, OR DENTS:
  - THAT OCCUR TO A STRUCTURALLY SIGNIFICANT ITEM (SSI) GIVEN IN SRM 51-00-4, FIG. 3 AND,
  - THAT ARE WITHIN THE ALLOWABLE DAMAGE LIMITS OF THE BOEING SRM,

  DO NOT HAVE AN EFFECT ON THE DAMAGE TOLERANCE PROPERTIES OF THE SSI. THEREFORE, EXISTING SUPPLEMENTAL STRUCTURAL INSPECTION DOCUMENT (SSID) INSPECTION PROGRAMS REMAIN EFFECTIVE.
- REFER TO SRM 51-10-1 FOR INSPECTION AND REMOVAL OF DAMAGE.
- APPLY A CHEMICAL CONVERSION COATING TO REWORKED ALUMINUM SURFACES AS GIVEN IN SRM 51-10-2.
- REFER TO SRM 51-70 FOR AERODYNAMIC SMOOTHNESS REQUIREMENTS.
- APPLY THE FINISH TO THE REWORKED AREAS AS GIVEN IN AMM 51-20.

[A] IF YOU BLEND OUT DAMAGE LARGER THAN THE ALLOWABLE DAMAGE LIMITS, THEN OPERATING LIMITS ARE NECESSARY. REFER TO FIGURE 2.

[B] REFER TO SRM 51-70 FOR DAMAGE LIMITATIONS IN THE VICINITY OF PITOT STATIC PROBES AND STATIC PORTS.

[C] CLEAN UP EDGE CRACKS AS SHOWN IN DETAIL I. OTHER CRACKS ARE NOT PERMITTED.

[D] CLEAN UP EDGE DAMAGE AS SHOWN IN DETAIL I. FOR OTHER DAMAGE REFER TO DETAILS II,IV,V, AND VI.

[E] CLEAN OUT PUNCTURE OR HOLE UP TO 0.25 INCH MAXIMUM DIAMETER, PROVIDED DAMAGE IS 4D FROM ANY OTHER HOLE, FASTENER OR PART EDGE. FILL HOLE WITH A 2017-T3 OR T4 ALUMINUM RIVET INSTALLED WET WITH BMS 5-95 SEALANT. ALL OTHER HOLES TO BE REPAIRED.

[F] EDGE GAPS MUST BE FILLED WITH AERODYNAMIC SMOOTHER PER 51-70 IN AREAS FORWARD OF BS 663.75. THIS DOES NO APPLY TO LAP JOINTS AND LONGITUDINAL EDGES OF REPAIRS.

[G] SKIN WRINKLES MUST NOT BE MORE THAN 0.15 INCH IN DEPTH EXCEPT FOR THE AREAS NOTED IN [H].

[H] SKIN WRINKLES MUST NOT BE MORE THAN 0.18 INCH IN DEPTH BETWEEN BS 540 AND BS 727, LBBL 6.5 AND RBBL 6.5, IN THE VICINITY OF THE KEEL BEAM.

[I] WHERE CORROSION CLEANUP GOES OVER COUNTERSUNK RIVET HEADS, NOT MORE THAN 0.006 INCH CAN BE REMOVED FROM THE HEAD THICKNESS.

Fuselage Skin Allowable Damage
Figure 1 (Sheet 2)

BOEING PROPRIETARY - Copyright © - Unpublished Work - See title page for details.

NOTES (CONTINUED)

[J] WHERE COUNTERSUNK FASTENERS ARE REMOVED (DUE TO CORROSION OR OTHER DAMAGE) AND REPLACED WITH FASTENERS OF A LARGER SIZE, THE COUNTERSINK DEPTH MUST NOT EXCEED 80% OF THE THICKNESS OF SKIN AND BONDED DOUBLER, IF ANY. IF THIS RESULTS IN HEAD PROTRUSION, SHAVE THE HEAD (0.006 MAX) OR INSTALL UNIVERSAL HEAD RIVETS AS FOLLOWS:

INITIAL RIVET	REPLACEMENT RIVET
BACR15CE5D	BACR15ET7AD
BACR15CE6D	BACR15BB8AD

[K] NO REPAIRS OR SPECIAL INSPECTIONS ARE NECESSARY FOR DENTS THAT ARE:

- LESS THAN 0.125 INCH IN DEPTH AND,
- HAVE AN A/Y RATIO MORE THAN 30 AND,
- MEET THE OTHER REQUIREMENTS OF DETAIL III.

REFER TO SRM 51-40-1 FOR THE REPAIR OF MINOR DENTS IN SHEET METAL MATERIALS. DENTS WHICH EXCEED THESE LIMITS SHOULD BE REPAIRED PERMANENTLY. HOWEVER YOU CAN DELAY THE REPAIR AS GIVEN AS GIVEN IN TABLE II, IF ALL THE OTHER REQUIREMENTS OF DETAIL III ARE MET.

CAUTION: DO NOT FILL DENTS WHICH EXCEED THE LIMITS SHOWN IN DETAIL III.

[L] A DENT CAN CAUSE DAMAGE TO ADJACENT STRUCTURE BELOW A SKIN PANEL. INSPECT THE STRUCTURE FOR DAMAGE AND REPAIR AS NECESSARY. REFER TO AMM 05-51.

[M] ALL CORROSION MUST BE CLEANED UP AS SHOWN IN DETAILS II,IV,V, AND VI. REPORT LOCATION AND EXTENT OF CORROSION IN EXCESS OF THE ABOVE LIMITS TO THE BOEING COMPANY.

[N] REFER TO 53-30-3, FIG. 23, TO REPAIR LIGHTNING STRIKE DAMAGE.

[O] SKIN WRINKLES MUST NOT EXCEED 0.15 INCH IN DEPTH.

[P] DAMAGE CLEANUP SHOWN IS FOR SKIN OUTER SURFACE OR SKIN INNER SURFACE UP TO MAXIMUM DEPTH, SKIN MATERIAL LOSS ON THE FAYING SURFACES OR AT THE BOND LINE IS NOT PERMITTED. CONTACT THE BOEING COMPANY OR REPAIR IF MATERIAL LOSS IS PRESENT ONLY AT THE FAYING SURFACES OR AT THE BOND LINE.

[Q] SKIN MATERIAL THICKNESS REMOVAL LIMITS SHOWN IN THE ART IN THIS DETAIL APPLY ONLY TO EXTERNAL AND INTERNAL SKIN SURFACES, NOT TO BOND LINES OR TO FAYING SURFACES. FOR DAMAGE AT BOND LINES OR AT FAYING SURFACES, REFER TO NOTES [P], [R], [S], [T], AND [Y].

[R] REFER TO DETAIL VII FOR ALLOWABLE DISBONDING AT STRINGER STRAPS AND TEAR STRAPS. REFER TO FIGURE 5 FOR ALLOWABLE DISBONDING AT FUSELAGE SKIN LAP JOINTS FOR CUM LINE NUMBERS 1 THRU 291 (LAP JOINTS ARE NOT BONDED FOR CUM LINE NUMBERS 292 AND ON). FOR DISBONDING IN EXCESS OF THE ALLOWABLE LIMITS, REPAIR PER 53-30-3 OR FOLLOW THE REWORK AND REPAIR INSTRUCTIONS IN SERVICE BULLETINS 737-53A1039, 737-53A1042, AND 737-53-1078.

[S] FOR DISBONDING OR OTHER DAMAGE AT CIRCUMFERENTIAL BUTT SPLICES, TREAT PER SERVICE BULLETIN 737-53-1076.

[T] IF CORROSION CAUSES MATERIAL LOSS AT THE BOND LINES OR FAYING SURFACE (AT TEAR STRAPS, STRINGER STRAPS, LAP JOINTS, LARGE DOUBLER AREAS, OR CIRCUMFERENTIAL BUTT SPLICES), TREAT PER SERVICE BULLETINS 737-53A1039, 737-53A1042, 737-53-1076, AND 737-53-1078 AS APPLICABLE.

[U] MATERIAL LOSS AFTER CLEANUP ON ANY BONDED DOUBLER SHALL NOT EXCEED 10% OF THE THICKNESS OF THE BONDED DOUBLER.

[V] DENTS IN TWO ADJACENT BAYS ARE NOT PERMITTED. ADJACENT BAYS ARE SPECIFIED AS FRAME BAYS THAT ARE DIRECTLY FORWARD AND AFT OF ONE ANOTHER OR STRINGER BAYS THAT ARE DIRECTLY ABOVE AND BELOW ONE ANOTHER. BAYS THAT ARE DIAGONAL TO ONE ANOTHER ARE NOT ADJACENT BAYS.

[W] REWORKED SURFACES MUST HAVE A FINISH OF 32 Ra OR BETTER IN ZONE C AND 63 Ra OR BETTER IN ALL OTHER AREAS UNLESS A DIFFERENT FINISH IS SPECIFIED.

[X] REFER TO SERVICE BULLETIN 737-53A1262 FOR SCRIBE DAMAGE THAT IS MORE THAN THE ALLOWABLE DAMAGE LIMITS OF THIS SRM SECTION.

[Y] ZONE A -

IF THE SKIN IS POCKETED ABOVE THE LAP JOINT, THEN REMOVE THE DAMAGE UP TO 10% OF THE PRODUCTION SKIN THICKNESS AS GIVEN IN DETAIL II. THE CONDITIONS THAT FOLLOW MUST BE MET:

1. THE PROJECTED LOGITUDINAL LENGTH OF THE DAMAGE WITHIN ZONE A IS LESS THAN 2 INCHES.
   (SEE DETAIL VIII FOR EXAMPLES).

   NOTE: MULTIPLE LINES ARE ACCEPTABLE IF THE PROJECTED LENGTH IS LESS THAN 2 INCHES.
   (SEE DETAIL X FOR EXAMPLES).

Fuselage Skin Allowable Damage
Figure 1 (Sheet 3)

BOEING PROPRIETARY - Copyright © - Unpublished Work - See title page for details.

NOTES (CONTINUED)

Y ZONE A - (CONTINUED)

2. ADJACENT DAMAGE WITHIN ZONE A IS SEPARATED BY A MINIMUM OF 10 INCHES. SEE DETAIL VIII FOR EXAMPLES.

IF THE SKIN IS NOT POCKETED ABOVE THE LAPJOINT, THEN REMOVE THE DAMAGE AS SHOWN IN DETAILS II, IV, V AND VI. IN AREAS WITH CHEM-MILL STEPS, CONTACT THE BOEING COMPANY FOR REWORK INSTRUCTIONS OR DO A DOUBLER REPAIR AS SHOWN IN THIS MANUAL.

ZONE B -

NO REWORK IS PERMITTED TO THE UPPER SKIN, LOWER SKIN OR BONDED DOUBLER IN THE FAYING SURFACES, OR THE BOND LINE SURFACES. IN THESE AREAS, CONTACT THE BOEING COMPANY FOR REWORK INSTRUCTIONS OR DO A DOUBLER REPAIR AS SHOWN IN THIS MANUAL. REWORK IS PERMITTED TO THE UPPER SKIN OUTER SURFACE AS SHOWN IN DETAIL V OR IN THE LIGHTNING STRIKE SECTION OF THIS MANUAL. REWORK IS PERMITTED TO THE EDGE OF THE UPPER SKIN AND BONDED DOUBLER AS SHOWN IN DETAIL I.

ZONE C -

REMOVE UP TO 10% OF THE PRODUCTION SKIN THICKNESS AS GIVEN IN DETAIL II. THE CONDITIONS THAT FOLLOW MUST BE MET:

1. THE PROJECTED LONGITUDINAL LENGTH OF THE DAMAGE WITHIN ZONE C IS LESS THAN 2 INCHES. (SEE DETAIL VIII FOR EXAMPLES)

2. ADJACENT DAMAGE WITHIN ZONE C IS SEPARATED BY A MINIMUM OF 10 INCHES.

   NOTE: MULTIPLE LINES ARE ACCEPTABLE IF THE PROJECTED LENGTH IS LESS THAN 2 INCHES. (SEE DETAIL X FOR EXAMPLE).

3. THE DAMAGE BEFORE REWORK IS A MINIMUM OF 0.10 INCH BELOW THE EDGE OF THE UPPER SKIN.

   NOTE: SCRIBE OR LONGITUDINAL SCRATCH DAMAGE THAT IS 0.10 INCH OR LESS BELOW THE EDGE OF THE UPPER SKIN OF THE LAP JOINT CANNOT BE REWORKED. REFER TO X, FOR OTHER DAMAGE REFER TO AA.

4. THE REWORKED AREA IS HFEC INSPECTED AFTER THE INITIAL BLEND AND REPEAT HFEC INSPECTIONS ARE ACCOMPLISHED AT 4500 CYCLE INTERVALS UNTIL 18,000 CYCLES SINCE REWORK. AFTER 18,000 CYCLES SINCE REWORK INSPECTIONS MAY REVERT TO NORMAL MAINTENANCE.

ZONE D -

IF THE SKIN IS POCKETED FWD OR AFT OF THE JOINT, THEN REMOVE THE DAMAGE UP TO 10% OF THE PRODUCTION SKIN THICKNESS AS GIVEN IN DETAIL II BETWEEN STR 7L AND 7R. MAKE SURE THE FOLLOWING CONDITIONS ARE MET:

1. THE PROJECTED CIRCUMFERENTIAL LENGTH OF THE DAMAGE WITHIN ZONE D IS LESS THAN 2.0 INCHES. (SEE DETAIL IX FOR EXAMPLES).

   NOTE: THAT MULTIPLE LINES ARE ACCEPTABLE, IF THE PROJECTED LENGTH IS LESS THAN 2.0 INCHES. (SEE DETAIL X FOR EXAMPLES).

2. ADJACENT DAMAGE WITHIN ZONE D IS SEPARATED BY A MINIMUM OF 10.0 INCHES

FOR ALL OTHER DAMAGES IN THE AREA BETWEEN 7L AND 7R WITH CHEM-MILLED POCKETS, CONTACT THE BOEING COMPANY FOR DAMAGE REMOVAL INSTRUCTIONS OR DO A DOUBLER REPAIR AS SHOWN IN THIS MANUAL.

BELOW STRINGER 7, AND IN AREAS ABOVE STRINGER 7 WITHOUT CHEM-MILL POCKETS, REMOVE DAMAGES AS SHOWN IN DETAILS II, IV, V AND VI.

ZONE E -

NO DAMAGE REMOVAL IS PERMITTED TO THE SKIN BONDED DOUBLER OR BUTT JOINT SPLICE STRAP IN THE FAYING SURFACES, OR THE BOND LINE SURFACES. IN THESE AREAS CONTACT THE BOEING COMPANY FOR REWORK INSTRUCTIONS OR DO A DOUBLER REPAIR AS SHOWN IN THIS MANUAL. REMOVE DAMAGE TO THE SKIN OUTER SURFACE AND THE BUTT JOINT SPLICE STRAP INNER SURFACE AS SHOWN IN DETAIL V OR IN THE LIGHTNING STRIKE SECTION OF THIS MANUAL. REWORK IS PERMITTED TO THE EDGE OF THE UPPER SKIN AND BONDED DOUBLER AS SHOWN IN DETAIL I.

ZONE F -

NO DAMAGE REMOVAL IS PERMITTED TO THE INSIDE OR OUTSIDE SURFACES OF THE BUTT JOINT SPLICE STRAP. IN THESE AREAS CONTACT THE BOEING COMPANY FOR REPAIR OR REWORK INSTRUCTIONS OR REPLACE THE STRAP.

Fuselage Skin Allowable Damage
Figure 1 (Sheet 4)

BOEING PROPRIETARY - Copyright © - Unpublished Work - See title page for details.

NOTES (CONTINUED)

Z A SCRIBE LINE IS DEFINED AS A NARROW, SHALLOW, DISTINCT LINE OF DAMAGE (UP TO 0.006 INCH DEEP) IN THE FUSELAGE SKIN OR STRUCTURE. THERE ARE MANY ACTIONS THAT CAN CAUSE SCRIBE LINES TO BE CREATED. FOR EXAMPLE, SCRIBE LINES CAN BE CREATED WHEN YOU USE A RAZOR BLADE TO REMOVE SEALANT OR TRIM DECALS ON THE FUSELAGE SKIN, OR WHEN YOU USE A METAL SCRAPER TO REMOVE SEALANT FROM A FILLET AT A LAP JOINT OR FROM A GAP AT A BUTT SPLICE.

AA SAME CRITERIA AS FLAG NOTE Y EXCEPT:

1. REWORK IS PERMITTED WITHIN THE 0.10 INCH AREA BELOW THE EDGE OF THE UPPER SKIN IN ZONE C.

   NOTE: INTERFERENCE WITH THE UPPER SKIN MUST BE CONSIDERED WHEN BLENDING, TO ENSURE THE REQUIRED BLEND TAPER RATIO CAN BE KEPT.

AB THE MAXIMUM LENGTH OF ANY CONTINUOUS BLEND IS 20 INCHES.

AC ACCOMPLISH A DETAILED VISUAL AND HFEC INSPECTION AFTER INITIAL BLEND. REPEAT THE VISUAL INSPECTIONS AT 1,000 CYCLE INTERVALS, AND THE HFEC INSPECTIONS AT 4,500 CYCLE INTERVALS UNTIL 18,000 CYCLES SINCE REWORK. AFTER 18,000 CYCLES INSPECTIONS, REVERT TO NORMAL MAINTENANCE.

NOTE: THIS INSPECTION IS NOT REQUIRED FOR DAMAGE LESS THAN 2 INCHES LONG AND MINIMUM OF 10 INCHES FROM ADJACENT DAMAGE.

Fuselage Skin Allowable Damage
Figure 1 (Sheet 5)

BOEING PROPRIETARY - Copyright © - Unpublished Work - See title page for details.

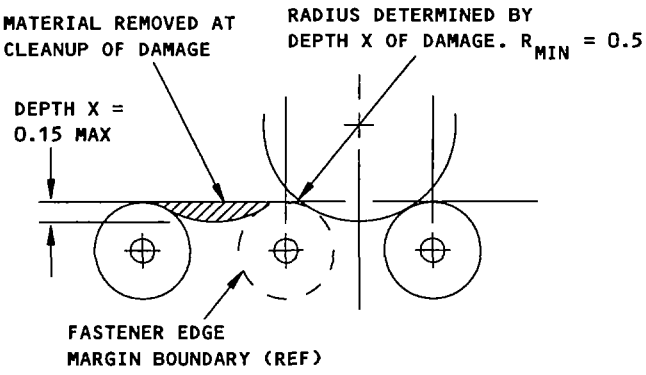

DAMAGE CLEANUP OF EDGES WHERE FASTENER EDGE MARGINS DO NOT OVERLAP

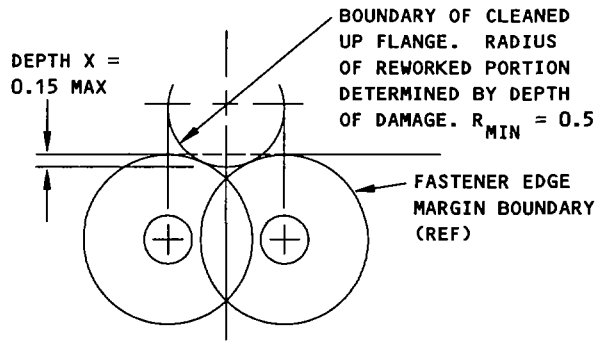

DAMAGE CLEANUP OF EDGES WHERE FASTENER EDGE MARGINS OVERLAP

DETAIL I

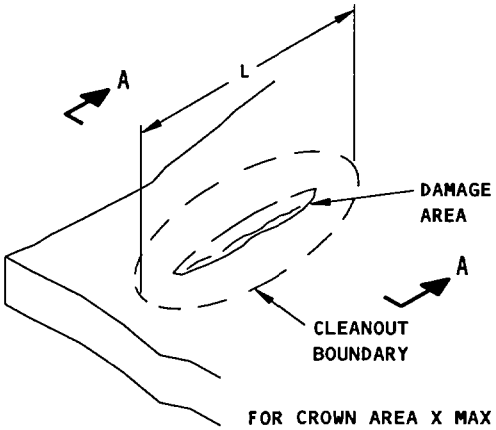

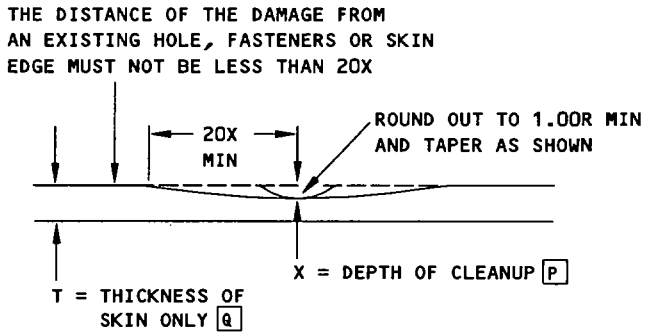

SECTION A-A

FOR CROWN AREA X MAX = 10% T,
FOR ALL OTHER AREAS, REFER TO FIG. 2, CHART AREA A FOR X MAX
L MAX = 20 INCHES FOR ALL AREAS

REMOVAL OF NICKS, GOUGES, CORROSION, AND SCRATCH DAMAGE ON A SURFACE

DETAIL II W

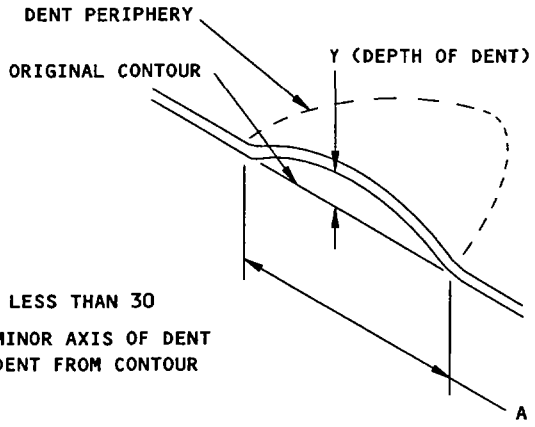

$\frac{A}{Y}$ MUST NOT BE LESS THAN 30

A = WIDTH OF MINOR AXIS OF DENT
Y = DEPTH OF DENT FROM CONTOUR
Y = 0.125 MAX

DENTS MUST:

- BE SMOOTH AND FREE OF SHARP CREASES, GOUGES OR CRACKS
- BE 10 INCHES OR MORE FROM A CUTOUT AND 3 INCHES OR MORE FROM A SKIN SPLICE AS MEASURED FROM THE NEAREST FASTENER HOLE CENTERLINE TO THE EDGE OF THE DENT PERIPHERY,
- NOT BE COMMON TO A STRINGER, TEAR STRAP, FRAME OR FASTENER

DENTS MUST NOT HAVE:

- BROKEN PULLED OR LOOSE FASTENERS
- ELONGATED FASTENER HOLES
- SUBSTRUCTURE DAMAGE OR OIL CANNING.

DENT ALLOWABLE DAMAGE

DETAIL III

Fuselage Skin Allowable Damage
Figure 1 (Sheet 6)

BOEING PROPRIETARY - Copyright © - Unpublished Work - See title page for details.

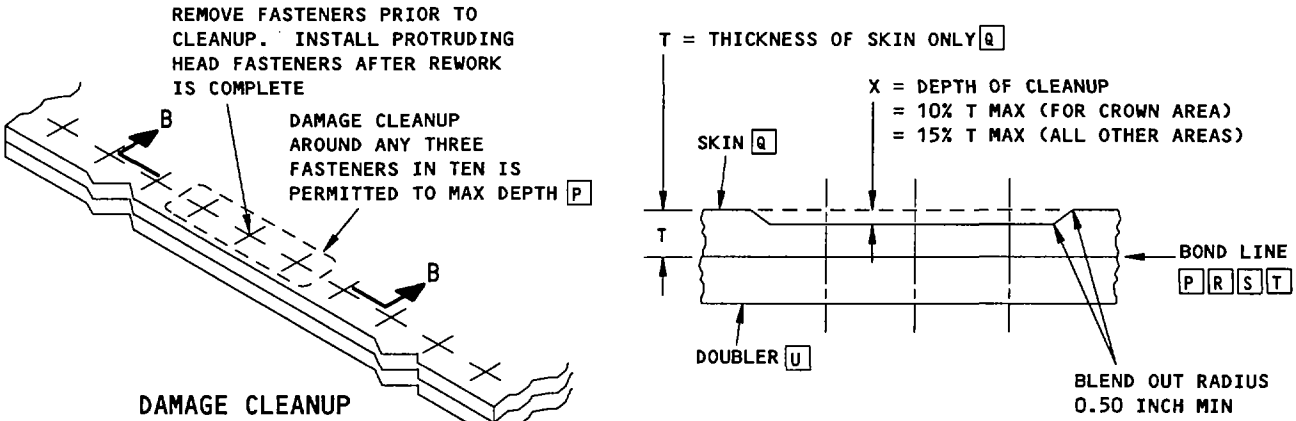

DAMAGE CLEANUP
DETAIL IV W

SECTION B-B

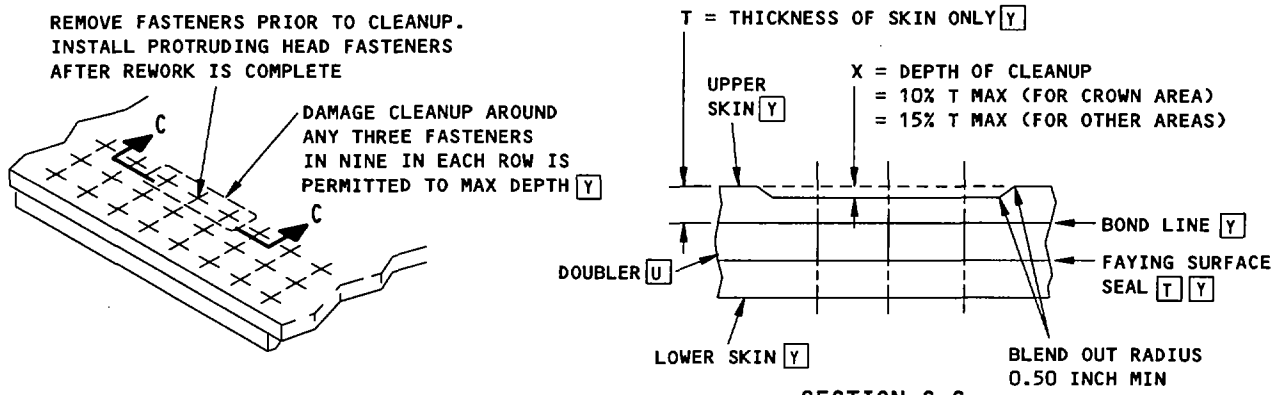

DAMAGE CLEANUP AT A LAP JOINT
DETAIL V W

SECTION C-C

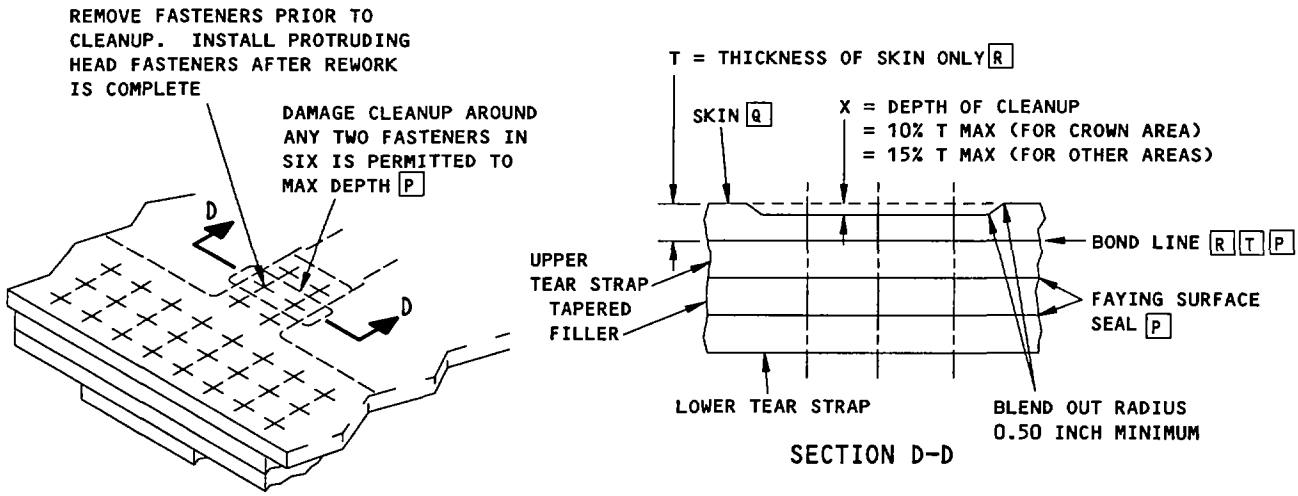

SECTION D-D

DAMAGE CLEANUP AT A TEAR STRAP
DETAIL VI W

Fuselage Skin Allowable Damage
Figure 1 (Sheet 7)

BOEING PROPRIETARY - Copyright © - Unpublished Work - See title page for details.

NOTE

- REPLACE EXISTING COUNTERSUNK FASTENERS WITH PROTRUDING HEAD OVERSIZED FASTENERS IN AREAS OF DISBONDED DOUBLERS AND STRAPS

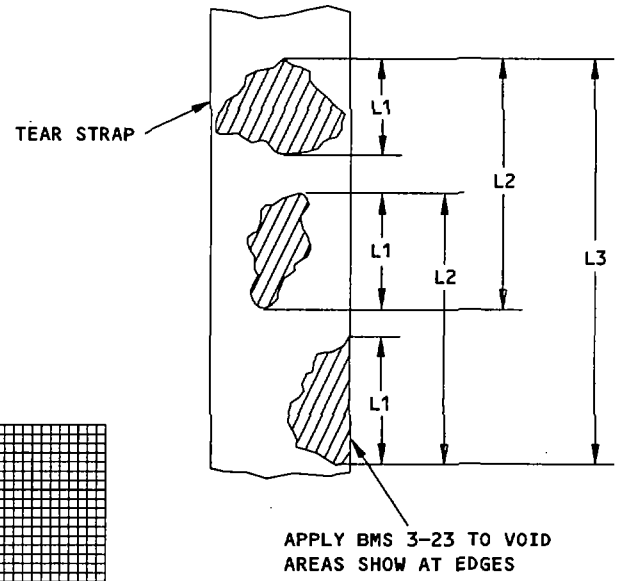

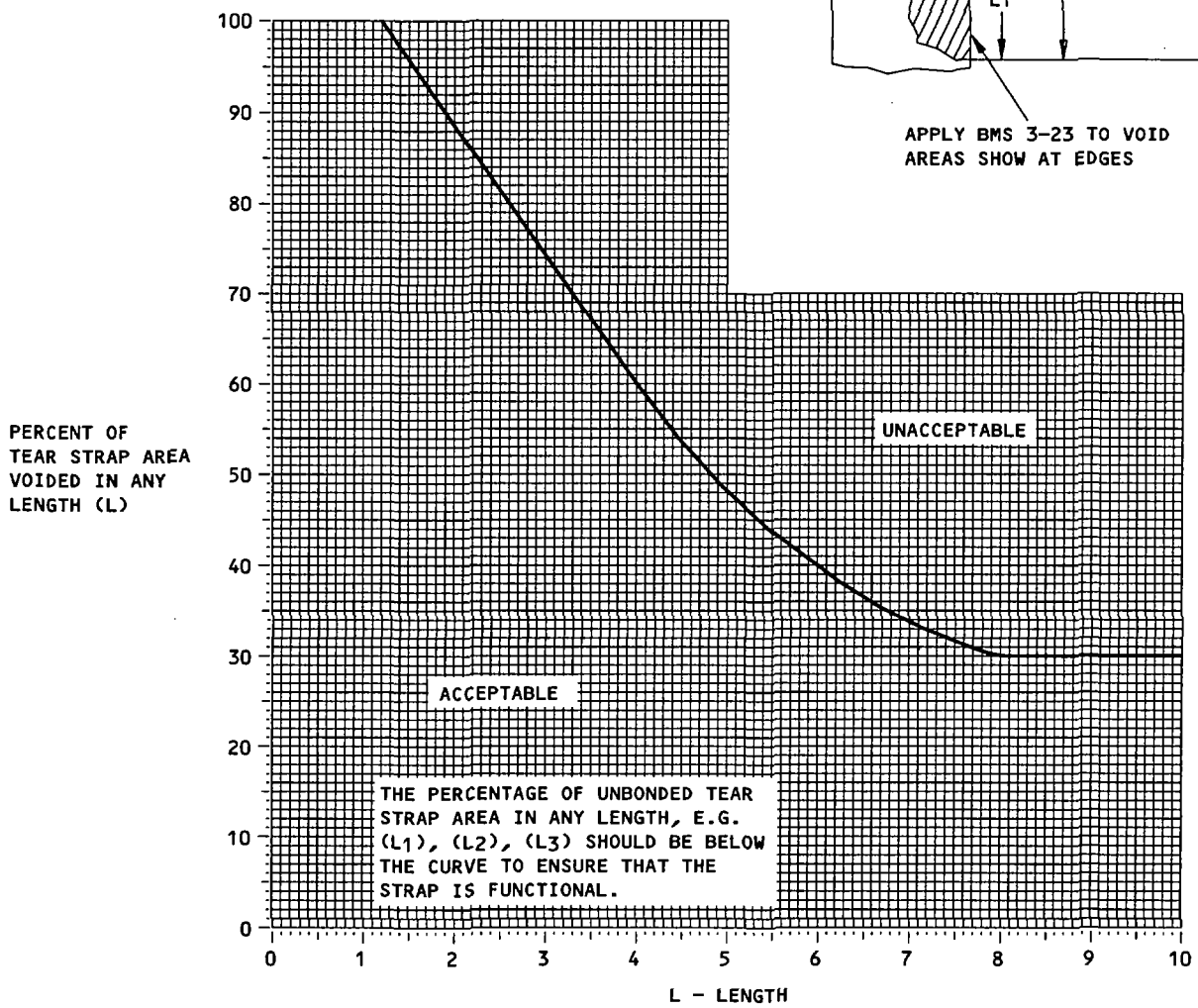

TEAR STRAP ALLOWABLE VOIDS
DETAIL VII

Fuselage Skin Allowable Damage
Figure 1 (Sheet 8)

BOEING PROPRIETARY - Copyright © - Unpublished Work - See title page for details.

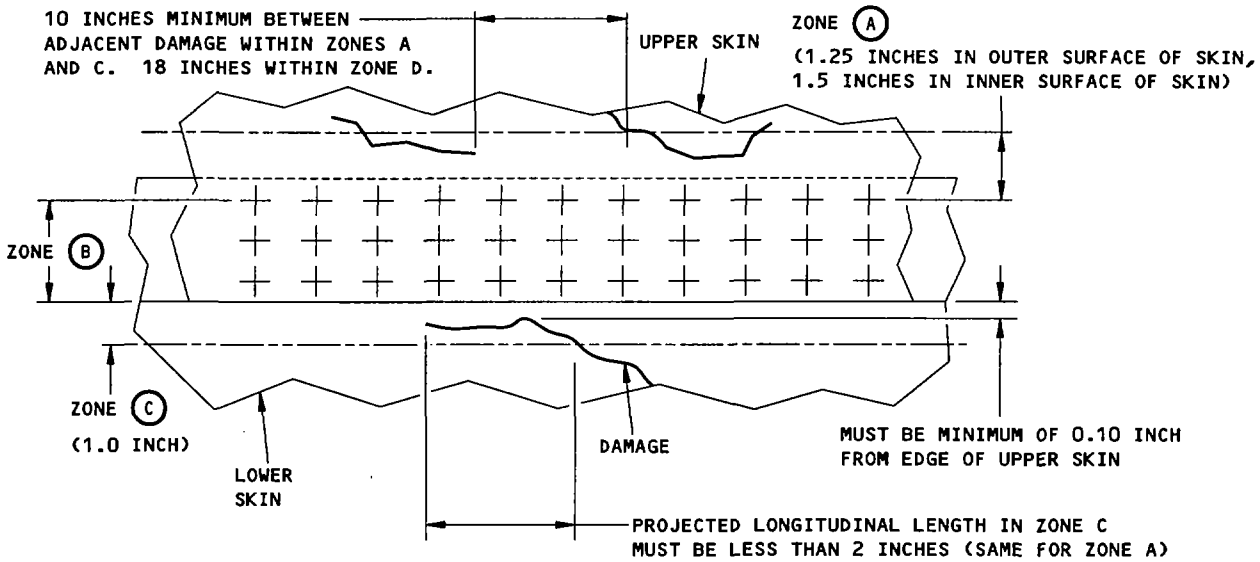

LAP JOINT
DETAIL VIII

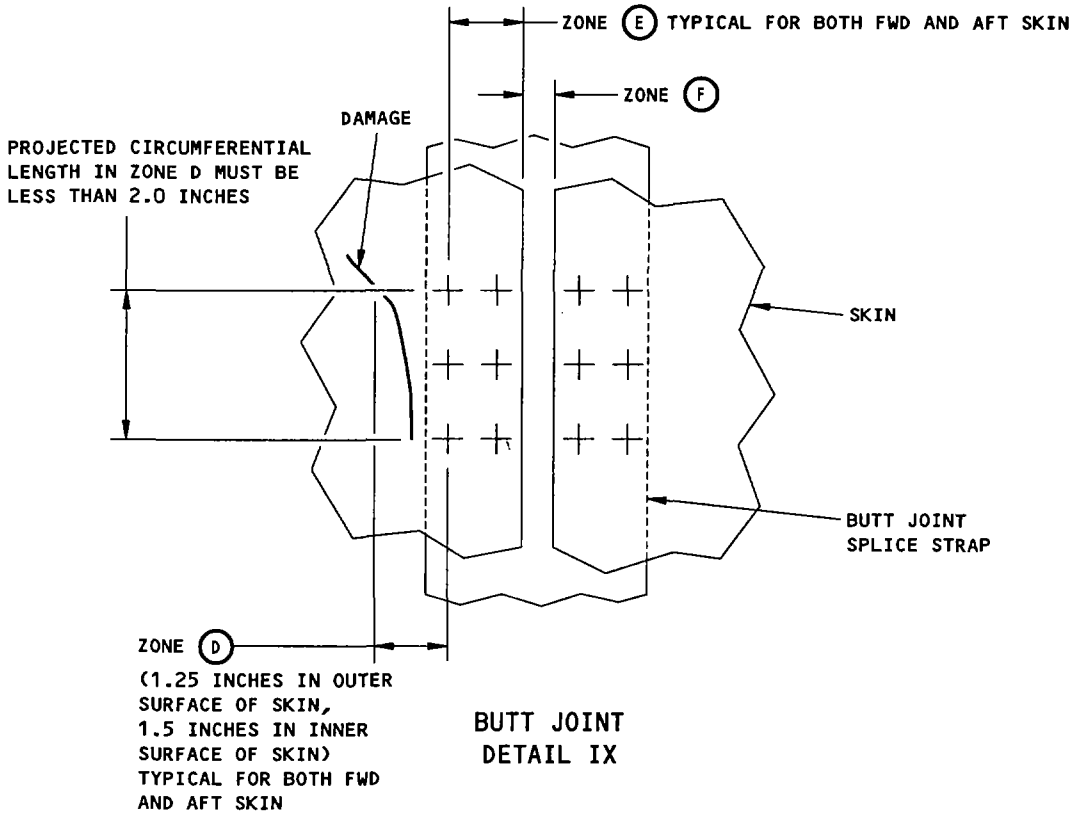

BUTT JOINT
DETAIL IX

Fuselage Skin Allowable Damage
Figure 1 (Sheet 9)

BOEING PROPRIETARY - Copyright © - Unpublished Work - See title page for details.

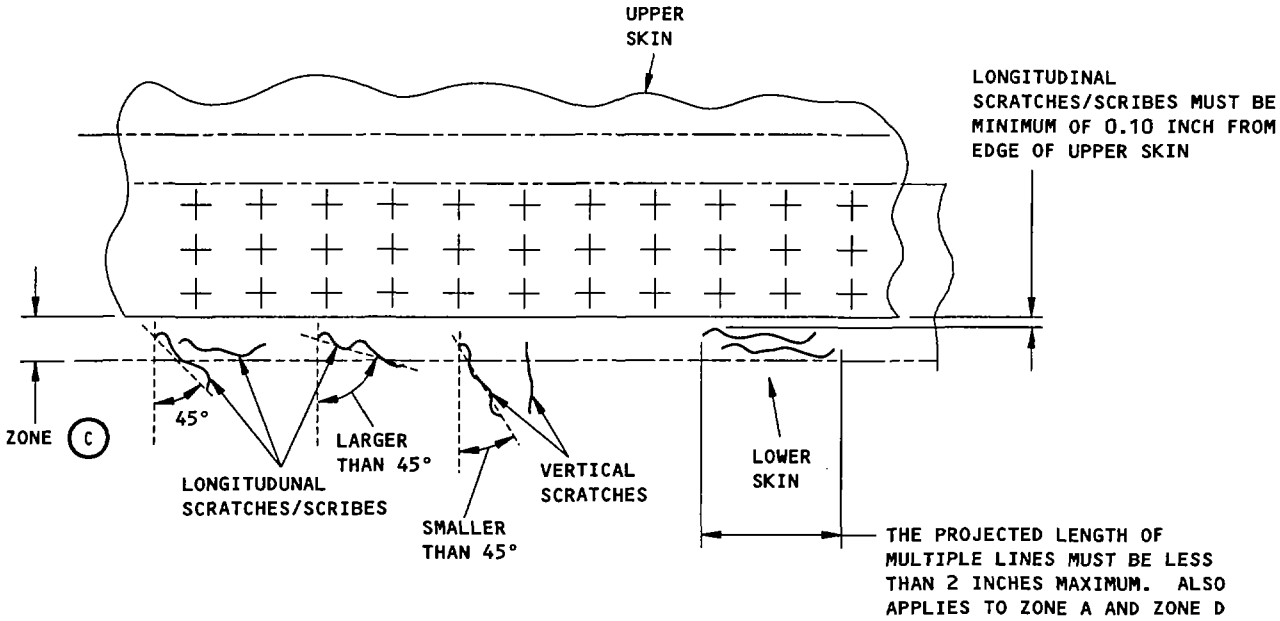

LAP JOINT SHOWN, BUTT JOINT SIMILAR
DETAIL X

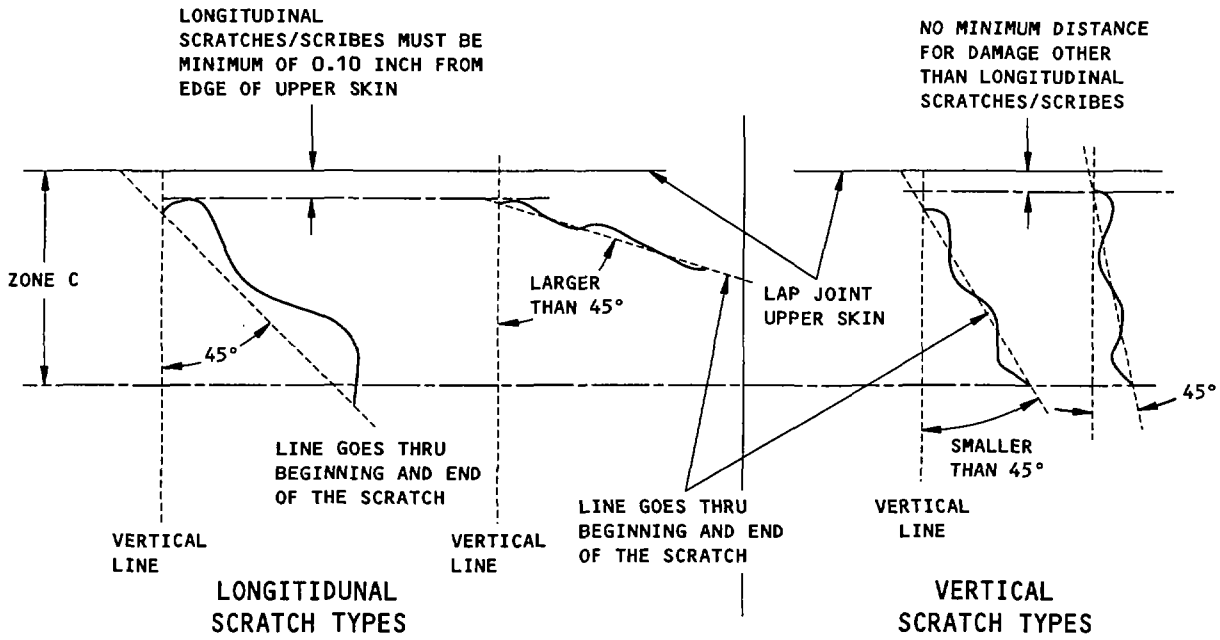

SCRATCH TYPES NEAR LAP JOINT (ZONE C)
DETAIL XI

Fuselage Skin Allowable Damage
Figure 1 (Sheet 10)

BOEING PROPRIETARY - Copyright © - Unpublished Work - See title page for details.

DEPTH	A/Y RATIO	CORRECTIVE ACTION
LESS THAN 0.125 INCH	GREATER THAN 30	ALLOWABLE DAMAGE. NO REPAIRS NECESSARY.
LESS THAN 0.125 INCH	A/Y RATIO BETWEEN 15 AND 30 (15<A/Y<30)	DENT MUST BE REPAIRED PERMANENTLY. HOWEVER, YOU CAN DELAY THE REPAIR IF: 1. YOU INITIALLY DO A DETAILED VISUAL INSPECTION OF THE DENT, 2. YOU DO AN HFEC INSPECTION WITHIN 4000 CYCLES, 3. YOU DO A DETAILED VISUAL INSPECTION EVERY 4,000 CYCLES, AND 4. A PERMANENT REPAIR IS MADE BEFORE 24,000 CYCLES.
LESS THAN 0.125 INCH	LESS THAN 15	DENT MUST BE REPAIRED PERMANENTLY. HOWEVER, YOU CAN DELAY THE REPAIR IF: 1. YOU INITIALLY DO A DETAILED VISUAL INSPECTION OF THE DENT, 2. YOU DO AN HFEC INSPECTION WITHIN 4000 CYCLES, 3. YOU DO A DETAILED VISUAL INSPECTION EVERY 4,000 CYCLES, AND 4. A PERMANENT REPAIR IS MADE BEFORE 10,000 CYCLES.
DEPTH BETWEEN 0.125 INCH AND 0.25 INCH (0.125<DEPTH<0.25)	A/Y RATIO BETWEEN 15 AND 30 (15<A/Y<30)	
DEPTH BETWEEN 0.125 INCH AND 0.25 INCH (0.125<DEPTH<0.25)	GREATER THAN 30	DENT MUST BE REPAIRED PERMANENTLY. HOWEVER, YOU CAN DELAY THE REPAIR IF: 1. YOU INITIALLY DO A DETAILED VISUAL INSPECTION OF THE DENT, 2. YOU DO AN HFEC INSPECTION WITHIN 4000 CYCLES, 3. YOU DO A DETAILED VISUAL INSPECTION EVERY 4,000 CYCLES, AND 4. A PERMANENT REPAIR IS MADE BEFORE 16,000 CYCLES.
GREATER THAN 0.125 INCH	LESS THAN 15	DENT MUST BE REPAIRED PERMANENTLY. HOWEVER, YOU CAN DELAY THE REPAIR IF: 1. YOU INITIALLY DO A DETAILED VISUAL INSPECTION OF THE DENT, 2. YOU DO AN HFEC INSPECTION WITHIN 500 CYCLES, 3. YOU DO A DETAILED VISUAL INSPECTION EVERY 500 CYCLES, AND 4. A PERMANENT REPAIR IS MADE BEFORE 6,000 CYCLES.
GREATER THAN 0.25 INCH	ALL	

TABLE II [K]

NOTE: IN ORDER TO USE TABLE II, THE DENT MUST MEET THESE REQUIREMENTS.

DENTS MUST:

- BE SMOOTH AND FREE OF SHARP CREASES, GOUGES, OR CRACKS,
- BE 10 INCHES OR MORE FROM A CUTOUT AND 3 INCHES OR MORE FROM A SKIN SPLICE AS MEASURED FROM THE NEAREST FASTENER HOLE CENTERLINE TO THE EDGE OF THE DENT PERIPHERY,
- NOT BE COMMON TO A STRINGER, TEAR STRAP, FRAME OR FASTENER.

DENTS MUST NOT HAVE:

- BROKEN, PULLED OR LOOSE FASTENERS,
- ELONGATED FASTENER HOLES,
- SUBSTRUCTURE DAMAGE OR OIL CANNING.

Fuselage Skin Allowable Damage
Figure 1 (Sheet 11)

BOEING PROPRIETARY - Copyright © - Unpublished Work - See title page for details.

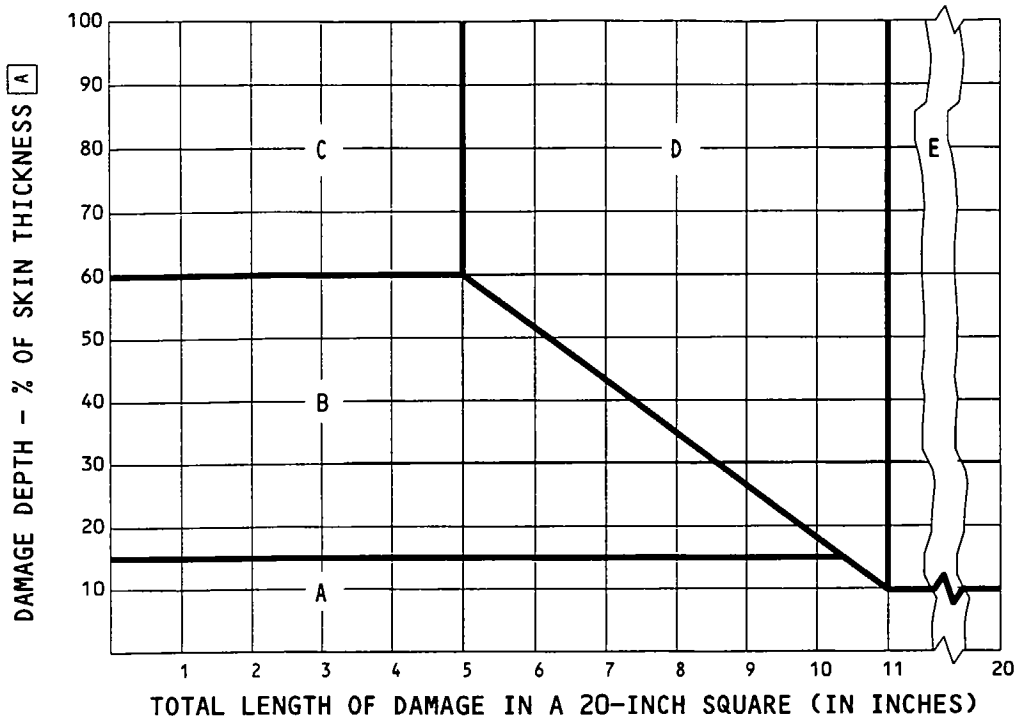

Fuselage Skin Damage Limitations
Figure 2 (Sheet 1)

BOEING PROPRIETARY - Copyright © - Unpublished Work - See title page for details.

CHART AREA	DAMAGE TREATMENT	ALLOWABLE AIRPLANE OPERATIONS
A	CLEAN UP PER FIG. 1 [B]	NO RESTRICTIONS AFTER REMOVAL OF DAMAGE
B	CLEAN UP PER FIG. 1	LIMITED TO 50 HOURS OF FLIGHT INCLUDING REVENUE FLIGHTS. DAMAGE MUST BE REPAIRED WITH A PERMANENT REPAIR THEREAFTER.
C	CLEAN UP PER FIG. 1. DRILL 0.25 DIA HOLE AT ENDS OF CRACKS OR TEARS	NON-REVENUE FLIGHTS TO A REPAIR FACILITY ARE ALLOWED PROVIDED: 1. THE MAX CABIN PRESSURE DIFFERENTIAL DOES NOT EXCEED 5.0 PSIG WITH RESPECT TO OUTSIDE AIR PRESSURE 2. PERMISSION FOR FLIGHT IS OBTAINED FROM THE COGNIZANT REGULATORY AGENCY. DAMAGE MUST BE REPAIRED WITH A PERMANENT REPAIR THEREAFTER.
D	CLEAN UP PER FIG. 1. DRILL 0.25 DIA HOLE AT ENDS OF CRACKS OR TEARS	NON-REVENUE FLIGHTS TO A REPAIR FACILITY ARE ALLOWED PROVIDED: 1. THE BOEING COMMERCIAL AIRPLANE COMPANY'S STRUCTURES STAFF IS NOTIFIED BEFORE FLIGHT 2. THE CABIN IS UNPRESSURIZED (ZERO PSIG DIFFERENTIAL PRESSURE). DAMAGE MUST BE REPAIRED WITH A PERMANENT REPAIR THEREAFTER.
E	CONTACT THE BOEING COMPANY	APPROVAL OF THE BOEING COMMERCIAL AIRPLANE COMPANY'S STRUCTURAL STAFF IS REQUIRED PRIOR TO ANY FLIGHT DAMAGE MUST BE REPAIRED WITH A PERMANENT REPAIR THEREAFTER.

NOTES

- DAMAGE, SUCH AS BLENDOUTS, TRIMOUTS, OR DENTS:
  - THAT OCCUR TO A STRUCTURALLY SIGNIFICANT ITEM (SSI) GIVEN IN SRM 51-00-4, FIG. 3 AND,
  - THAT ARE WITHIN THE ALLOWABLE DAMAGE LIMITS OF THE BOEING SRM,

  DO NOT HAVE AN EFFECT ON THE DAMAGE TOLERANCE PROPERTIES OF THE SSI. THEREFORE, EXISTING SUPPLEMENTAL STRUCTURAL INSPECTION DOCUMENT (SSID) INSPECTION PROGRAMS REMAIN EFFECTIVE.
- REFER TO FIG. 1 FOR RESTRICTIONS IN CROWN AREA OF FUSELAGE.

[A] PERCENT OF SKIN THICKNESS REMOVED IS RELATIVE TO NOMINAL THICKNESS OF SKIN ONLY. (THE NOMINAL THICKNESS DOES NOT INCLUDE THE THICKNESS OF ANY DOUBLERS, TRIPLERS OR STRAPS).

[B] IF DAMAGE IS LONGER THAN 20 INCHES, THEN FIGURE 1 IS NOT APPLICABLE. REPAIR DAMAGE LONGER THAN 20 INCHES WITH A DOUBLER REPAIR AS SHOWN IN THIS MANUAL OR CONTACT THE BOEING COMPANY FOR REPAIR INSTRUCTIONS.

Fuselage Skin Damage Limitations
Figure 2 (Sheet 2)

BOEING PROPRIETARY - Copyright © - Unpublished Work - See title page for details.

NOTES

- THIS REPAIR WILL HAVE AN EFFECT ON A STRUCTURALLY SIGNIFICANT ITEM (SSI) GIVEN IN SRM 51-00-4, FIG. 3. BUT, NO CHANGE TO THE SUPPLEMENTAL STRUCTURAL INSPECTION DOCUMENT (SSID) INSPECTION PROGRAM IS NECESSARY.
- INSPECTION OF BONDED LAP SPLICES IS SUBJECT OF SERVICE BULLETIN 737-53A1039.
- FOR TYPES OF DELAMINATION, REFER TO DETAIL I.
- FOR RECOMMENDED SEALANT TYPES, REFER TO SRM 53-30-4, FIG. 2.
- FOR APPLICATION OF WATER DISPLACING CORROSION-INHIBITING COMPOUND, REFER TO SRM 51-10-2.
- FOR APPLICATION OF FILLET SEALS, REFER TO SRM 51-40-5.
- DELAMINATED SURFACES OF A LAP JOINT CAN BE PROTECTED FROM CORROSION BY INJECTING WATER DISPLACING CORROSION-INHIBITING COMPOUND INTO THE JOINT. THE APPLICATION OF FILLET SEALS IS OPTIONAL AND SHOULD BE ACCOMPLISHED ONLY AFTER THE CORROSION-INHIBITING COMPOUND HAS BEEN INJECTED INTO THE JOINT. THE CORROSION INHIBITOR ALONG THE EDGE AND ADJACENT SURFACE MUST BE REMOVED WITH ONE OF SOLVENTS RECOMMENDED IN SRM 51-10-2 BEFORE YOU FILLET SEAL.
- DELAMINATED AREAS OF THE JOINT WILL PRODUCE A REDUCTION IN FATIGUE LIFE. THE FATIGUE LIFE CAN BE RESTORED BY MECHANICALLY FASTENING THE JOINT AS SHOWN IN DETAIL II. PROTECT JOINT AS DESCRIBED ABOVE.

[A] REMOVAL OF THE INITIAL FASTENER IS NOT NECESSARY. WHEN FASTENER HAS BEEN REMOVED, REPLACE IT WITH THE SAME TYPE AND SIZE PROVIDED THE SKIN IS NOT DELAMINATED AT THE FASTENER LOCATION.

[B] INSPECT THE COLD BONDED SKIN LAP JOINT AS GIVEN IN SB 53A1039.

[C] REFER TO ALTERNATIVE DETAIL II.

[D] AFTER REMOVAL OF THE INITIAL FASTENERS, DO A HIGH-FREQUENCY EDDY-CURRENT INSPECTION OF THE FASTENER HOLE AS GIVEN IN THE NONDESTRUCTIVE TEST MANUAL (D6-37239), PART 6. IF CRACKS WERE FOUND, REPAIR BEFORE FURTHER FLIGHT.

Bond Delamination Repair at Fuselage Skin Lap Joints
Figure 3 (Sheet 1)

BOEING PROPRIETARY - Copyright © - Unpublished Work - See title page for details.

SYMBOLS

REMOVE EXISTING 5/32-INCH DIAMETER RIVET [D]. ENLARGE HOLE WITH NO. 2 (0.221-INCH DIAMETER) DRILL. SMALL AMOUNT OF COUNTERSINK REMAINING AFTER OVERSIZING IS SATISFACTORY. INSTALL RIVET MS20470AD7-( ). MINIMUM DIAMETER OF DRIVEN HEAD TO BE 0.312

REMOVE EXISTING 3/16-INCH DIAMETER RIVET [D]. ENLARGE HOLE WITH NO. 2 (0.221-INCH DIAMETER) DRILL. INSTALL RIVET BACR15DS7D( ). MINIMUM DIAMETER OF DRIVEN HEAD TO BE 0.312. DO NOT ENLARGE COUNTERSINK [C]

REMOVE EXISTING 3/16-INCH DIAMETER RIVET [D]. ENLARGE HOLE WITH SIZE F (0.257-INCH DIAMETER) DRILL. SMALL AMOUNT OF CONTERSINK REMAINING AFTER OVERSIZING IS SATISFACTORY. INSTALL RIVET MS20470AD8-( ). MINIMUM DIAMETER OF DRIVEN HEAD TO BE 0.350

REMOVAL IS NOT REQUIRED WHEN FASTENER DIAMETER IS GREATER THAN 0.187 INCH OR MADE OF STEEL. IF FASTENER IS REMOVED, REPLACE WITH SAME TYPE AND SIZE

REMOVE EXISTING FASTENER WITH DIAMETER 0.187 INCH OR LESS

WHEN FASTENER IS 0.156-INCH DIAMETER [D], ENLARGE HOLE WITH NO. 2 (0.221-INCH DIA) DRILL AND INSTALL MS20470AD7 RIVET. MIN DIA OF FORMED HEAD 0.312 INCH

WHEN FASTENER IS 0.187-INCH DIAMETER [D], ENLARGE HOLE WITH SIZE F (0.257-INCH DIA) DRILL AND INSTALL MS20470AD8 RIVET. MIN DIA OF FORMED HEAD 0.350 INCH

SMALL AMOUNT OF COUNTERSINK REMAINING AFTER OVERSIZING IS SATISFACTORY. INSTALL FASTENERS DRY

SEE METHOD III, DETAIL II

Bond Delamination Repair at Fuselage Skin Lap Joints
Figure 3 (Sheet 2)

1. REWORK INSTRUCTIONS

A. Select the desired fastening method if original joint fasteners were 3/16-inch diameter or smaller rivets. If the original fasteners were steel or rivets larger than 3/16-inch in diameter, install new fasteners of the same type and size as those installed originally. Install steel fasteners wet with BMS 5-95 sealant.

B. Where a lap splice has been separated, remove the loose adhesive, apply chemical film treatment as required by 51-10-2 and brush on a coat of BMS 10-11, Type 1 chemical and solvent resistant primer or corrosion inhibiting adhesive primer as detailed in 51-40-5 to both faying surfaces of the splice. When primer is dry, apply a thin coating of faying surface sealant to both faying surfaces of the splice. Refer to 53-30-4 for the recommended sealants.

C. When the splice has not been separated, inject water displacing corrosion inhibiting compound into the void area of the splice (Ref 51-10-2).

D. Install the applicable fasteners.

NOTE: Install rivets dry (without sealant) to prevent hydraulicing during head-forming operation. The diameters of the formed fastener heads are critical for joint strength requirements.

The following repairs may not be used in corroded areas where more than 10% of original skin thickness is removed.

(1) The single row repairs in Method III may be used to refasten a delaminated lap splice or to replace failed or corroded rivets. The replacement fasteners may be of the formed type (which necessitate access to both sides of the splice) or of the blind type. Install the blind fasteners in accordance with SB 737-53A1039.

Bond Delamination Repair at Fuselage Skin Lap Joints
Figure 3 (Sheet 3)

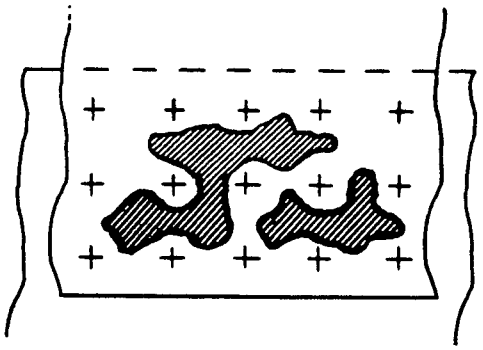

DELAMINATION ENTIRELY CONTAINED WITHIN JOINT

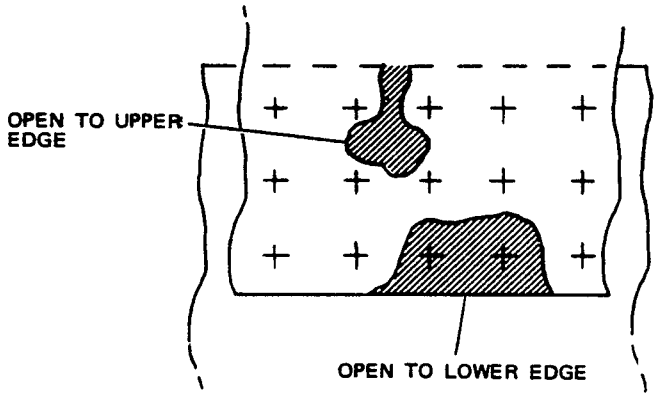

DELAMINATION OPEN TO JOINT EDGE

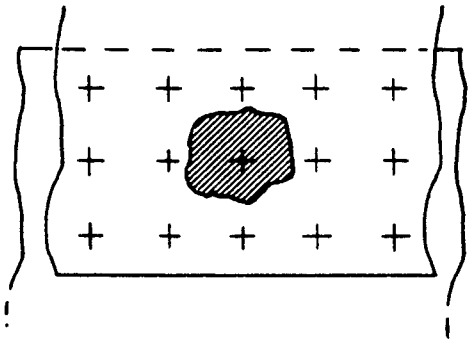

DELAMINATION AT A FASTENER

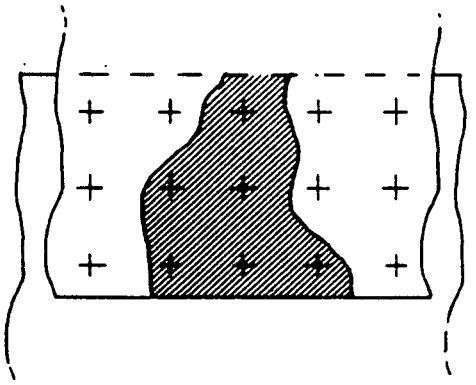

DELAMINATION FULL WIDTH OF JOINT

TYPES OF DELAMINATION
DETAIL I

Bond Delamination Repair at Fuselage Skin Lap Joints
Figure 3 (Sheet 4)

METHOD I DELETED

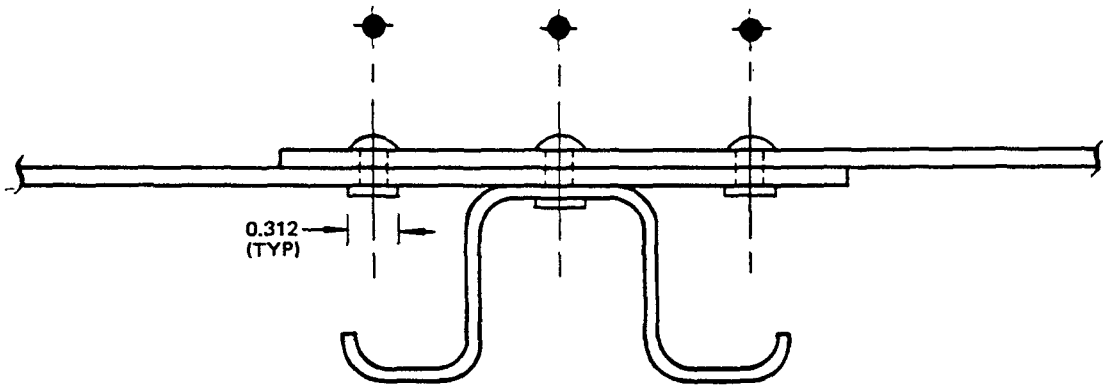

METHOD II A
(USE THIS METHOD IF ALL ORIGINAL FASTENERS WERE 5/32 INCH DIA RIVETS)

MECHANICAL FASTENING OF DELAMINATED JOINT

DETAIL II

Bond Delamination Repair at Fuselage Skin Lap Joints
Figure 3 (Sheet 5)

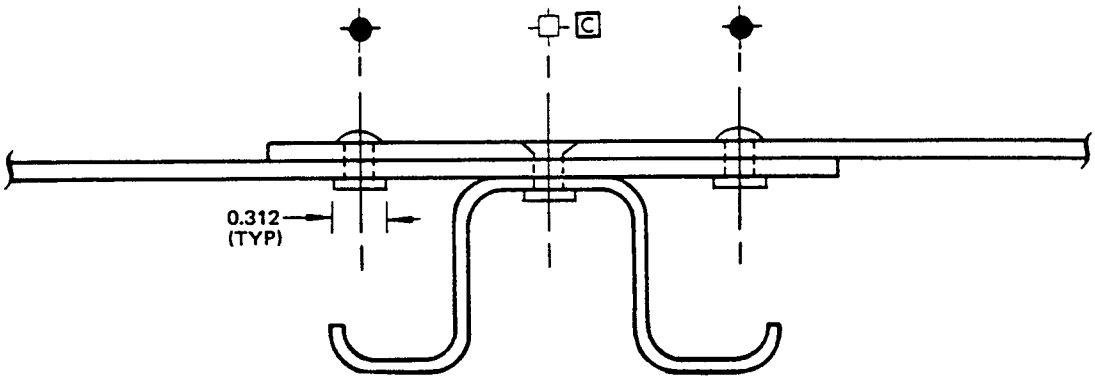

METHOD II B
(USE THIS METHOD IF ORIGINAL FASTENERS WERE 3/16 INCH DIA RIVETS IN CENTER ROW, 5/32 INCH DIA RIVETS IN OUTER ROWS)

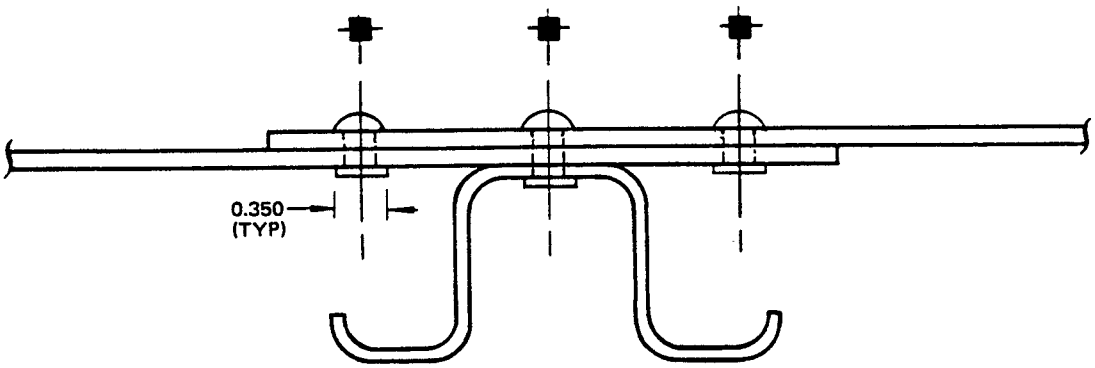

METHOD II C
(USE THIS METHOD IF ALL ORIGINAL FASTENERS WERE 3/16 INCH DIA RIVETS)

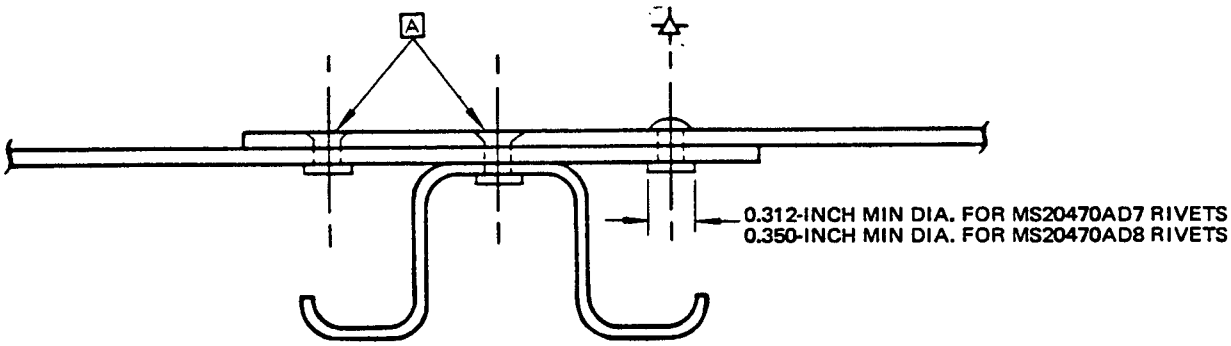

METHOD III
(USE THIS METHOD TO REFASTEN JOINT AFTER REMOVAL OF MINIMAL CORROSION OR WHEN JOINT IS PARTIALLY DELAMINATED) B

MECHANICAL FASTENING OF DELAMINATED JOINT
DETAIL II (CONTINUED)

Bond Delamination Repair at Fuselage Skin Lap Joints
Figure 3 (Sheet 6)

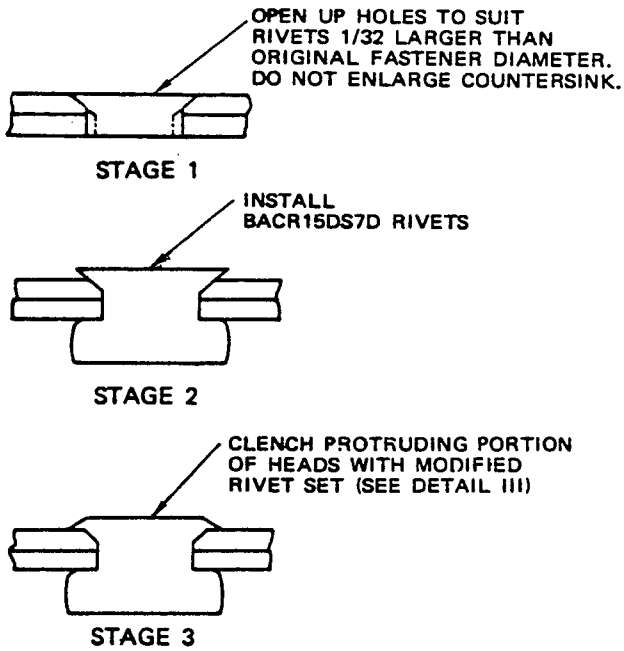

MECHANICAL FASTENING OF DELAMINATED JOINT
ALTERNATIVE DETAIL II

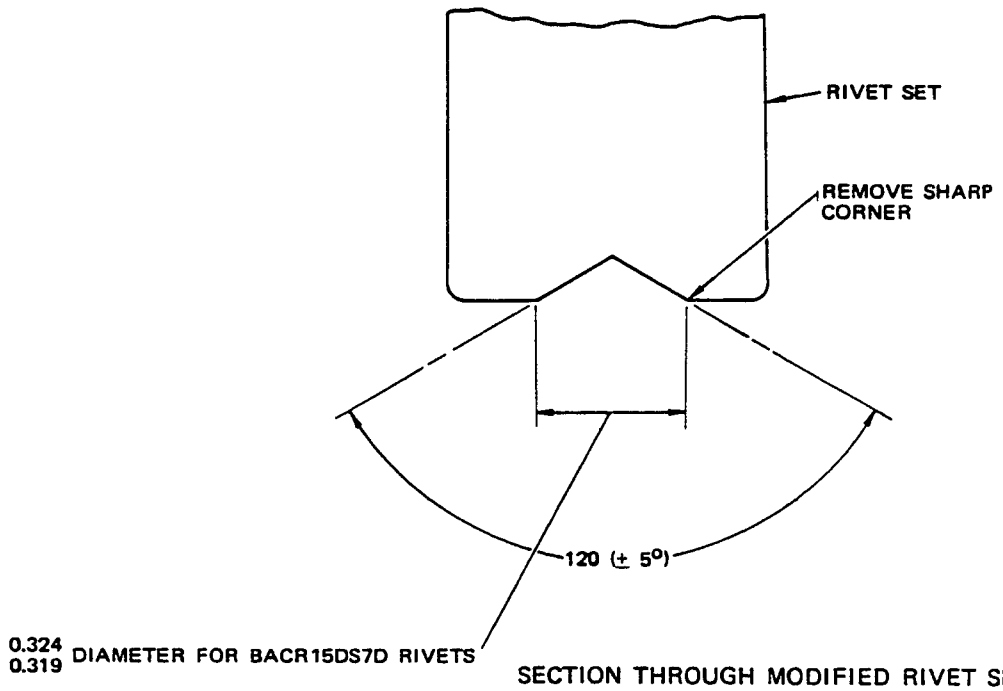

SECTION THROUGH MODIFIED RIVET SET
DETAIL III

Bond Delamination Repair at Fuselage Skin Lap Joints
Figure 3 (Sheet 7)

FIGURE 4 DELETED.
REFER TO 53-30-1, FIGURES 1 AND 2 FOR ALLOWABLE DAMAGE DATA.

FIGURE 5 HAS BEEN MOVED TO FIGURE 3 OF 53-30-1.

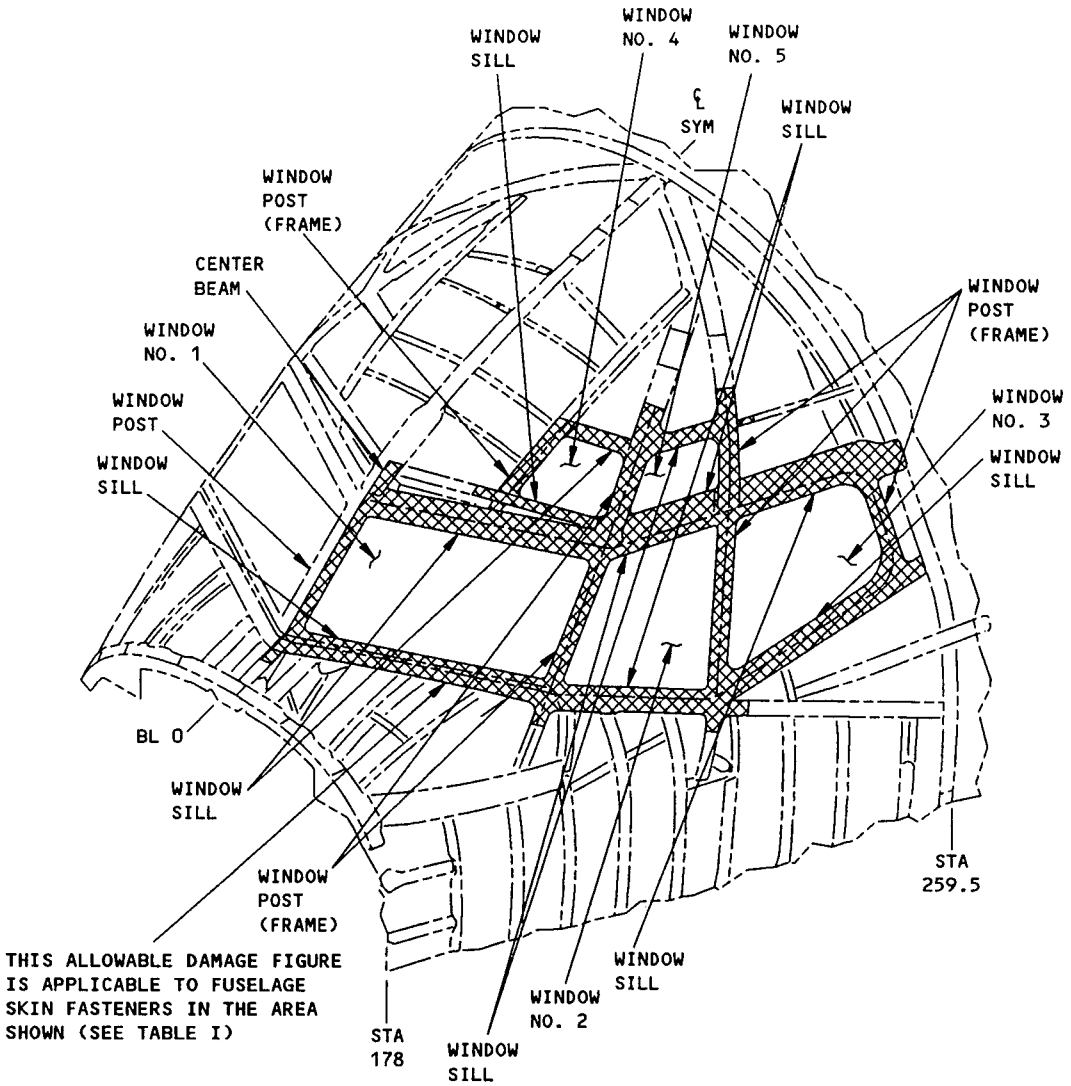

FLIGHT DECK WINDOWS AREA
(LEFT SIDE IS SHOWN, RIGHT SIDE IS OPPOSITE)
DETAIL I

Fuselage Skin Fastener Allowable Damage Around the Flight Deck Windows
Figure 6 (Sheet 1)

DESCRIPTION	LOOSE, MISSING, OR DAMAGED FASTENERS
SKIN FASTENERS AROUND THE FLIGHT DECK WINDOWS	A

TABLE I

NOTES

- REFER TO THE FOLLOWING WHEN USING THIS FIGURE:
  - AMM 51-21 FOR INTERIOR AND EXTERIOR FINISHES
  - AMM 51-31 FOR SEALS AND SEALING
  - SOPM 20-41-02 FOR APPLICATION OF FINISHES
  - SRM 51-70 FOR AERODYNAMIC SMOOTHNESS REQUIREMENTS
  - SRM 51-10-1 FOR INVESTIGATION AND CLEANUP OF DAMAGE
  - SRM 51-10-2 FOR PROTECTIVE TREATMENT OF METAL
  - SRM 51-20-4 FOR SEALING OF REPAIRS
  - SRM 51-30-3 FOR EQUIVALENT OR ALTERNATIVE FASTENERS
  - SRM 51-30-8 FOR COUNTERSINK REPAIR WASHERS.

A RIVETS THAT ARE MISSING, LOOSE, OR DAMAGED ARE TEMPORARILY PERMITTED IN THE SKIN JOINT TO THE COCKPIT-WINDOW-FRAMES STRUCTURE. BUT, MAKE SURE THE AIRPLANE AGREES WITH THESE CONDITIONS: B C

- THERE ARE NO MORE THAN SIX SOLID RIVETS OR BLIND RIVETS (TOTAL) THAT ARE MISSING, LOOSE, OR DAMAGED ON AN AIRPLANE
- THERE ARE NO DAMAGED, MISSING, OR BLIND RIVETS AT THE SAME LOCATIONS GIVEN IN THE REPAIR IN SERVICE BULLETIN 737-53-1059
- THERE ARE NO DAMAGED, MISSING, OR LOOSE HI-LOK BOLTS, LOCKBOLTS, OR OTHER BOLTS
- THERE ARE FIVE OR MORE FASTENERS (THAT ARE NOT DAMAGED OR LOOSE) BETWEEN THE RIVETS THAT ARE DAMAGED, MISSING, OR LOOSE.

B IF THE AIRPLANE DOES NOT AGREE WITH THE CONDITIONS OF NOTE A , REPLACE THE DAMAGED, MISSING, OR LOOSE FASTENERS. REPLACE THESE FASTENERS BEFORE ONE MORE FLIGHT WITH PRESSURIZATION. REFER TO BOEING DRAWING 65-45800. D E

C IF THE AIRPLANE AGREES WITH THE CONDITIONS OF NOTE A , DO THE STEPS THAT FOLLOW:

- DO INSPECTIONS OF THE FIVE ADJACENT FASTENERS THAT ARE ON EACH SIDE OF THE DAMAGED, MISSING, OR LOOSE RIVETS. DO THESE INSPECTIONS AT INTERVALS OF 250 FLIGHTS. MAKE SURE THAT THE FASTENERS AGREE WITH THE LIMITS GIVEN IN NOTE A . IF THE FASTENERS DO NOT AGREE WITH THE CONDITIONS OF NOTE A , REPLACE THE DAMAGED, MISSING, OR LOOSE FASTENERS. REPLACE THESE FASTENERS BEFORE ONE MORE FLIGHT WITH PRESSURIZATION. REFER TO BOEING DRAWING 65-45800. D E
- REPLACE DAMAGED, MISSING, OR LOOSE RIVETS IN LESS THAN 4500 FLIGHTS OR 18 MONTHS. USE THE LIMIT THAT OCCURS FIRST. REFER TO BOEING DRAWING 65-45800. D E

D YOU CAN REPLACE THE DAMAGED, MISSING, OR LOOSE RIVETS WITH BLIND RIVETS F (AT THE LOCATIONS THAT ARE NOT DOUBLE-FLUSH-RIVET LOCATIONS) OR SOLID RIVETS THAT ARE THE INITIAL TYPE E . IF YOU INSTALL BLIND RIVETS, INSTALL NAS1398D RIVETS (OR APPROVED REPLACEMENT RIVETS) F . IF NECESSARY, INSTALL COUNTERSINK-REPAIR WASHERS. REFER TO SRM 51-30-8. IF YOU INSTALL BLIND RIVETS, DO INSPECTIONS OF THE BLIND RIVETS AT INTERVALS OF 2500 FLIGHTS. IF THE INSPECTIONS SHOW DAMAGED, MISSING, OR LOOSE BLIND RIVETS, REPLACE THEM WITH BLIND RIVETS OR SOLID RIVETS E . REPLACE BLIND RIVETS WITH SOLID RIVETS THAT ARE THE INITIAL TYPE BEFORE THE NEXT 20,000 FLIGHT CYCLES. SOLID RIVETS THAT ARE THE INITIAL TYPE ARE GIVEN IN BOEING DRAWING 65-45800. E F

E THE MAXIMUM PERMITTED SPACE BETWEEN THE SKIN AND THE WINDOW FRAME IS 0.01 INCH BEFORE INSTALLATION OF THE FASTENERS. USE SHIMS IF NECESSARY. INSTALL THE SHIMS WITH BMS 5-95 SEALANT ON THE MATING SURFACES. IT IS OPTIONAL TO DO THE STEPS THAT FOLLOW (AND RECOMMENDED THAT YOU INSTALL THE UPGRADED FASTENERS AS GIVEN IN THIS NOTE):

- INSTALL THE RIVET HEAD ON THE INNER SURFACE OF THE WINDOW FRAME
- INSTALL A BACR15CE*M RIVET AS AN ALTERNATIVE TO BACR15CE*D F
- INSTALL A BACR15BA*DD RIVET AS AN ALTERNATIVE TO BACR15BA*D
- INSTALL AN MS20426DD* RIVET AS AN ALTERNATIVE TO MS20426D*.

F INSTALL BLIND RIVETS AND MONEL RIVETS WET WITH BMS 5-95 SEALANT.

Fuselage Skin Fastener Allowable Damage Around the Flight Deck Windows
Figure 6 (Sheet 2)

NOTES

[A] FOR CUM LINE NUMBERS:
1 THRU 291, 294 THRU 296, 304, 309, 311

[B] FOR CUM LINE NUMBERS:
292, 293, 297 THRU 303, 305 THRU 308, 310, 312 AND ON.
ALSO, FOR ALL AIRPLANES PRIOR TO CUM LINE NUMBER 317 AFTER INCORPORATION OF SB 53-1059

[C] DELETED

[D] FOR CUM LINE NUMBERS:
1 THRU 330

[E] FOR CUM LINE NUMBERS:
331 THRU 497

[F] FOR CUM LINE NUMBERS:
498 AND ON

[G] FOR CUM LINE NUMBERS:
1 THRU 491

[H] FOR CUM LINE NUMBERS:
492 AND ON

[J] FOR ALL AIRPLANES PRIOR TO CUM LINE NUMBER 317 AFTER INCORPORATION OF SB 53-1059

[K] FOR BOEING REF:
P4322 THRU P4399

ITEM	MATERIAL	REPAIR FIG. NO.
1	0.032 2024-T3	
2	0.020 2024-T3	
3	0.063 2024-T4	
4	0.040 CLAD 2024-T3	
5	0.056 CLAD 2024-01	
6	0.050 CLAD 2024-T3	
7	0.102 CLAD 7075-T6	
8	0.042 CLAD 2024-T3	
9	0.050 CORROSION RESISTANT STEEL	
10	0.160 2024-T42	
11	0.040 INCONEL X	
12	0.063 CLAD 2024-T3	
13	0.025 INCONEL X	
14	0.071 CLAD 2024-T3 CHEM MILLED	

SKIN REPAIR INDEX	
LOCATION OF DAMAGE	REPAIR FIG. NO.
BETWEEN STRINGERS	53-30-3 Fig. 1,2

Section 41 Skin Identification
Figure 1 (Sheet 1)

REF DWGS
65-45800
65-73742

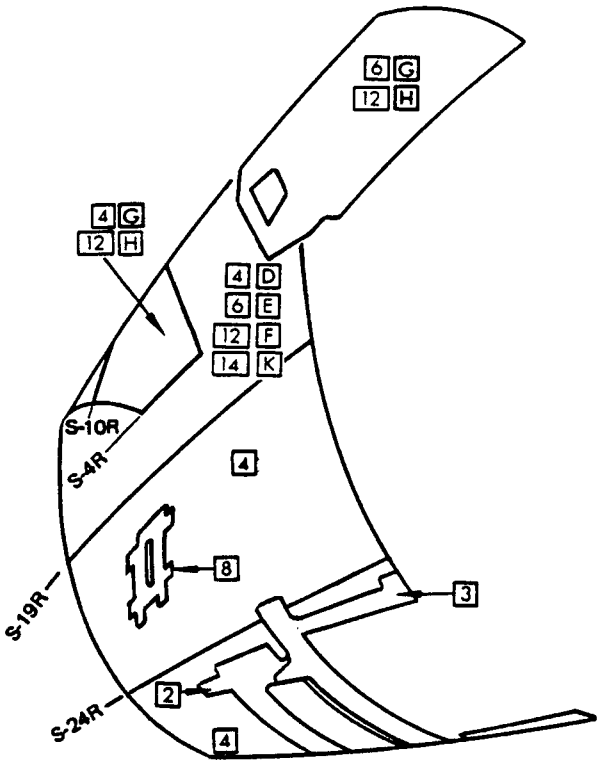

RIGHT SIDE, VIEWED FROM INSIDE

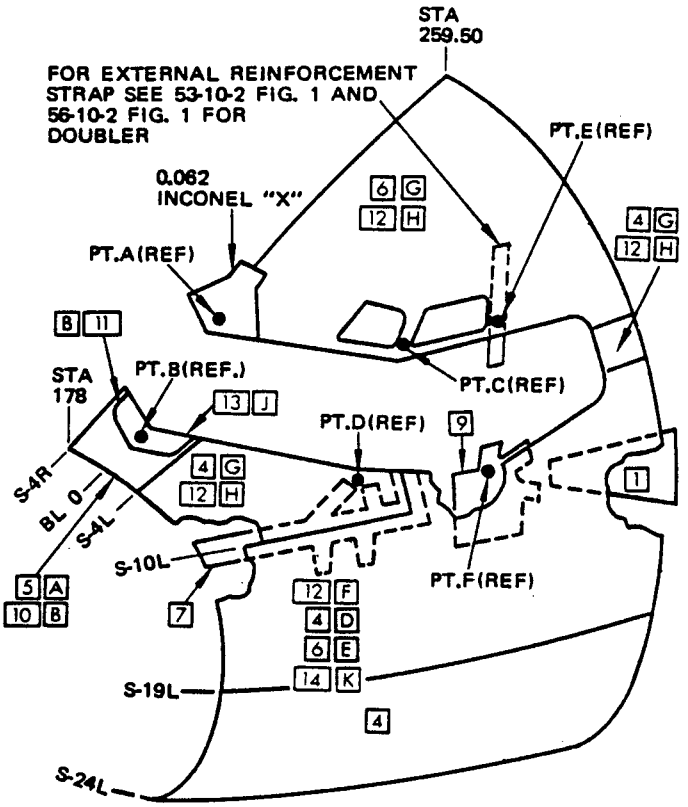

LEFT SIDE, VIEWED FROM OUTSIDE

FLIGHT COMPARTMENT – FUS STA 178 TO FUS STA 259.50

REF DWG
65-73742

PLAN VIEW OF OUTSIDE SURFACE

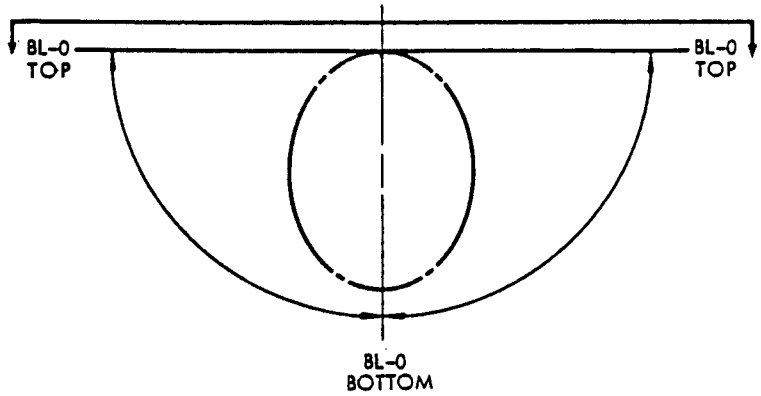

ITEM	MATERIAL	REPAIR FIG. NO.
1	0.036 SKIN + 0.036 DBLR BONDED CLAD 2024-T3 SHEETS	
2	0.040 SKIN + 0.040 DBLR BONDED CLAD 2024-T3 SHEETS	
3	0.040 SKIN + 0.036 DBLR BONDED CLAD 2024-T3 SHEETS	
4	0.045 SKIN +0.036 DBLR BONDED CLAD 2024-T3 SHEETS	
5	0.063 SKIN + 0.056 DBLR BONDED CLAD 2024-T3 SHEETS	
6	0.020 TRIPLER CLAD 2024-T3 SHEET	
7	0.025 TRIPLER CLAD 2024-T3 SHEET	
8	0.032 TRIPLER CLAD 2024-T3 SHEET	
9	0.036 TRIPLER CLAD 2024-T3 SHEET	
10	0.050 STRAP (OR DBLR) CLAD 2024-T3 SHEET	

ITEM	MATERIAL	REPAIR FIG. NO.
11	0.063 STRAP 2024-T3 OR T4 SHEET	
12	0.071 STRAP CLAD 2024-T3 SHEET	
13	0.090 STRAP 2024-T42 SHEET	
14	0.100 STRAP 2024-T3 OR T4 SHEET	
15	0.125 STRAP 2024-T3 SHEET	
16	0.032 SKIN + 0.020 DBLR BONDED CLAD 2024-T3 SHEETS	
17	0.036 SKIN + 0.025 DBLR BONDED CLAD 2024-T3 SHEETS	
18	0.040 SKIN + 0.020 DBLR BONDED CLAD 2024-T3 SHEETS	
19	0.056 SKIN CLAD 2024-T3	
20	0.032 STRAP CLAD 2024-T3	

Skin Identification, 737-100 Airplanes
Figure 2 (Sheet 1)

ITEM	MATERIAL	REPAIR FIG. NO.
21	0.063 CLAD 2024-T3	
22	0.32 SKIN = 0.020 DBLR + 0.016 TRIPLER	
	BONDED CLAD 2024-T3 SHEETS	
23	INBOARD TRACK FITTING FORGING 7075-T3	
24	0.063 SKIN CLAD 2024-T3	
25	0.032 DBLR CLAD 2024-T3	
26	0.020 DBLR CLAD 2024-T3	
27	0.112 STRAP 2024-T3	
28	0.090 DBLR CLAD 2024-T3	
29	0.040 DBLR CLAD 2024-T3	
30	0.071 TRIPLER CLAD 2024-T3	
31	CORNER REVEAL 356-T6 AL ALLOY	
32	0.04 A1S1 TYPE 321 ANNEALED	
33	0.080 DBLR CLAD 2024-T3	
34	BAC1496-356 X 48.00 LG, CLAD 2024-T3	53-30-3 FIG. 29
35	BAC1496-356 X 41.50 LG., CLAD 2024-T3	53-30-3 FIG. 29
36	BAC1496-356 X 11.10 LG., CLAD 2024-T3	53-30-3 FIG. 29
37	0.063 DBLR CLAD 2024-T3 SHEET	
38	0.063 MOUNTING PLATE CLAD 2024-T3 SHEET	

ITEM	MATERIAL	REPAIR FIG. NO.
39	0.063 EXTERNAL DBLR CLAD 2024-T3 SHEET	
40	0.025 ADAPTER CLAD 2024-T3 SHEET	
41	0.25 COVERPLATE 2024-T351 PLATE	
42	0.080 EXTERNAL DBLR CLAD 2024-T3 SHEET	
43	0.050 RING DBLR CLAD 2024-T3 SHEET	
44	0.025 ADAPTER CLAD 2024-T42 SHEET	
45	0.25 COVERPLATE 2024-T351 PLATE	
46	0.100 EXTERNAL DBLR 2024-T3 SHEET	
47	BAC1496-356 X 43.40 LG., CLAD 2024-T3	
48	BAC1496-356 X 12.10 LG., CLAD 2024-T3	
49	BAC1496-356 X 42.40 LG., CLAD 2024-T3	
50	2024-T3 X 0.125 THK. COVER	
	2024-T3 CLAD X 0.040 THK. TRIPLER	
51	2024-T3 CLAD X 0.063 THK. DBLR	

Skin Identification, 737-100 Airplanes
Figure 2 (Sheet 2)

NOTES

[A] STA 259.50 TO 360

[B] STA 360 TO 540 S-10L TO S-10R

[C] STA 360 TO 540 S-10L TO S-14L S-10R TO S-14R

[D] STA 360 TO 540 S-14L TO S-26L

[E] STA 360 TO 540 S-14R TO S-26R

[F] STA 360 TO 540 S-26L TO S-26R

[G] STA 540 TO 727 S-10L TO S-10R

[H] STA 540 TO 727 S-10L to S-18AL, S-10R TO S-18AR

[J] STA 727 TO 908 S-10L TO S-10R, STA 908 TO 1016 S-4L TO S-4R

[K] STA 727 TO 908 S-10L TO S-14L, S-10R TO S-14R

[L] STA 727 TO 908 S-14L TO S-25L

[M] STA 727 TO 908 S-14R TO S-25R

[N] STA 727 TO 1016 S-25L TO S-25R

[P] STA 908 TO 1016 S-4L TO S-25L

[Q] STA 908 TO 1016 S-4R TO S-25R

[R] STA 908 TO 1016 S-4L TO S-25L

[S] STA 1016 TO 1088 S-4L TO S-4R

[T] STA 1088 TO 1156 S-1 TO S-5AL

[U] STA 1088 TO 1156 S-1 TO S-5AR

[V] STA 1016 TO 1088 S-4L TO S-9L

[W] STA 1016 TO 1088 S-4R TO S-9R

[X] STA 1104 to 1138 S-5AL TO S-12L

[Y] STA 1104 TO 1138 S-5AR TO S-12R

[Z] STA 1016 TO 1088 S-9L TO S-16L

[AA] STA 1016 TO 1088 S-9R TO S-16R

[AB] STA 1088 TO 1156 S-12L TO S-20L

[AC] STA 1088 TO 1156 S-12R TO S-20R

[AD] STA 1016 TO 1088 S-16L TO S-24L

[AE] STA 1016 TO 1088 S-16R TO S-24R

[AF] STA 1016 TO 1088 S-24L TO S-24R

[AG] STA 908 TO 1016 S-25L TO S-25R

[AH] FOR AIRPLANES WITH OXYGEN SERVICE PANELS

[AJ] LH

[AK] FOR AIRPLANES WITH SKIN REPLACEMENT PORTION OF SB 53-1042 INCORPORATED

[AL] FOR 737-100 AIRPLANES THRU CUM LINE NUMBER 212

[AM] FOR AIRPLANES NOT LISTED IN

[AN] FOR AIRPLANES NOT LISTED IN

[AP] FOR 737-100 AIRPLANES THRU CUM LINE NUMBER 217

[AQ] FORGINGS OF 7079-T6 MATERIAL HAVE BEEN REPLACED BY FORGINGS OF 7075-T73 IN PRODUCTION; 7075-T73 FORGINGS ARE RECOMMENDED WHEN EXISTING STOCKS OF 7079-T6 ARE EXHAUSTED

[AR] FOR AIRPLANES NOT INCORPORATING SKIN REPLACEMENT PORTION OF SB 53-1042

[AS] FOR AIRPLANES INCORPORATING SKIN REINFORCEMENT PER SB 53-1058

Skin Identification, 737-100 Airplanes
Figure 2 (Sheet 3)

NOTES (CONT)

AT FOR CUM LINE NUMBERS: 1 THRU 5, 7, 9 THRU 11, 15, 17, 23, 26, 32

AU FOR AIRPLANES INCORPORATING SKIN REINFORCEMENT PER SB 53-1077

AV FOR CUM LINE NOS. 1 THRU 1014 WITH SB 53-1074 INCORPORATED

AW FOR AIRPLANES WITH FORWARD AIRSTAIRS REMOVED AS SHOWN IN SB 52-1092

AX FOR AIRPLANES WITH DOUBLER MODIFICATION AS SHOWN IN SB 53-1117

AY FOR AIRPLANES WITH ATC MODE "S" TRANSPONDER ANTENNA INSTALLED AS SHOWN IN SB 53-1142

AZ FOR AIRPLANES WITH TCAS ANTENNA INSTALLED AS SHOWN IN SB 53-1142

BA FOR AIRPLANES WITH TCAS ANTENNA PROVISIONS AND TCAS ANTENNA IS NOT INSTALLED

BB FOR AIRPLANES WITH PREVENTIVE MODIFICATION AS SHOWN IN SB 53-1149 INSTALLED

BC FOR AIRPLANES WITH GPS ANTENNA PROVISIONS INSTALLED AS GIVEN IN SB 53-1174

Skin Identification, 737-100 Airplanes
Figure 2 (Sheet 4)

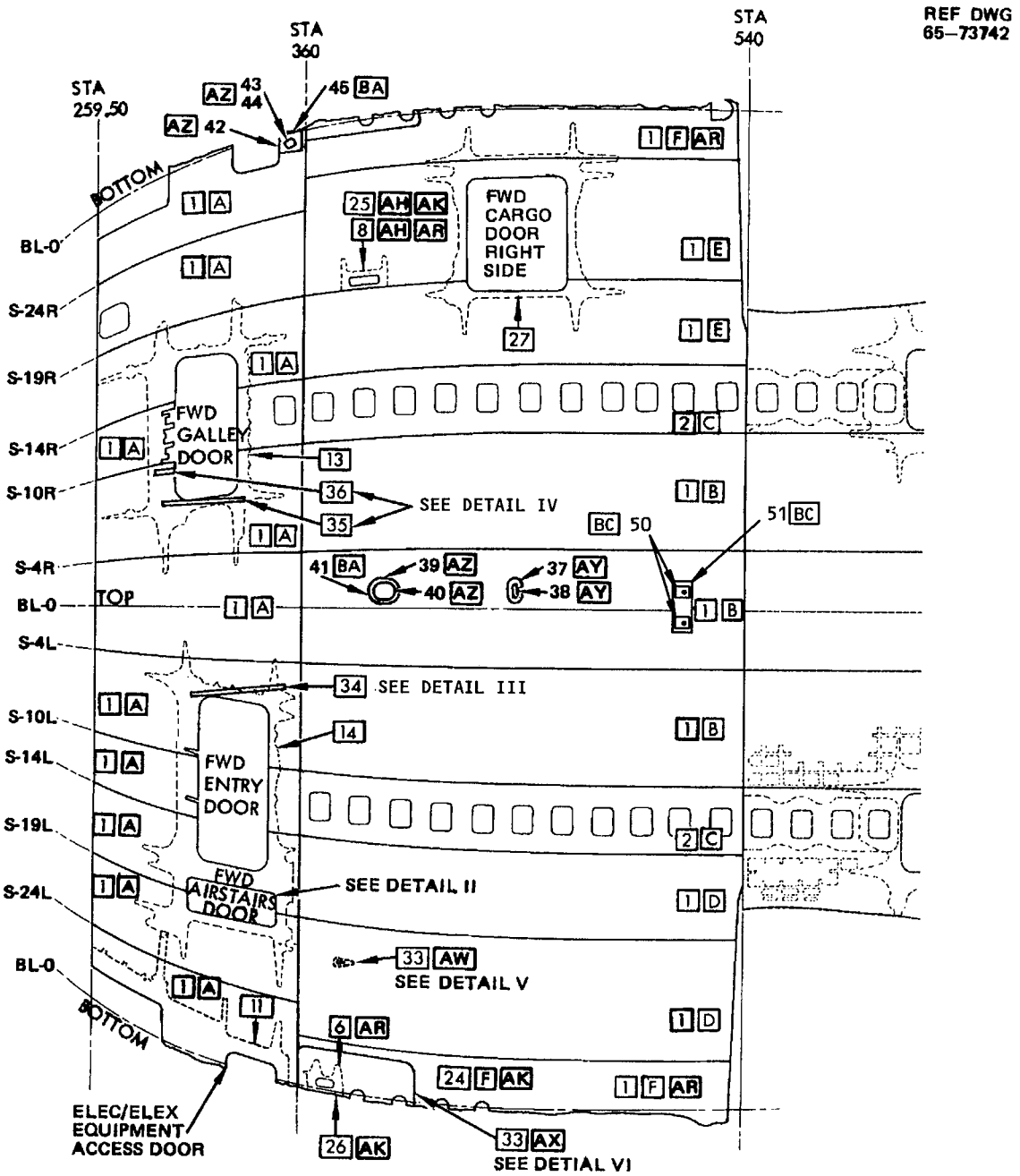

VIEW ON OUTER SURFACE

737-100 AIRPLANES - SECTION 41, FUS STA 259.50 TO FUS STA 360, AND SECTION 43

Skin Identification, 737-100 Airplanes
Figure 2 (Sheet 5)

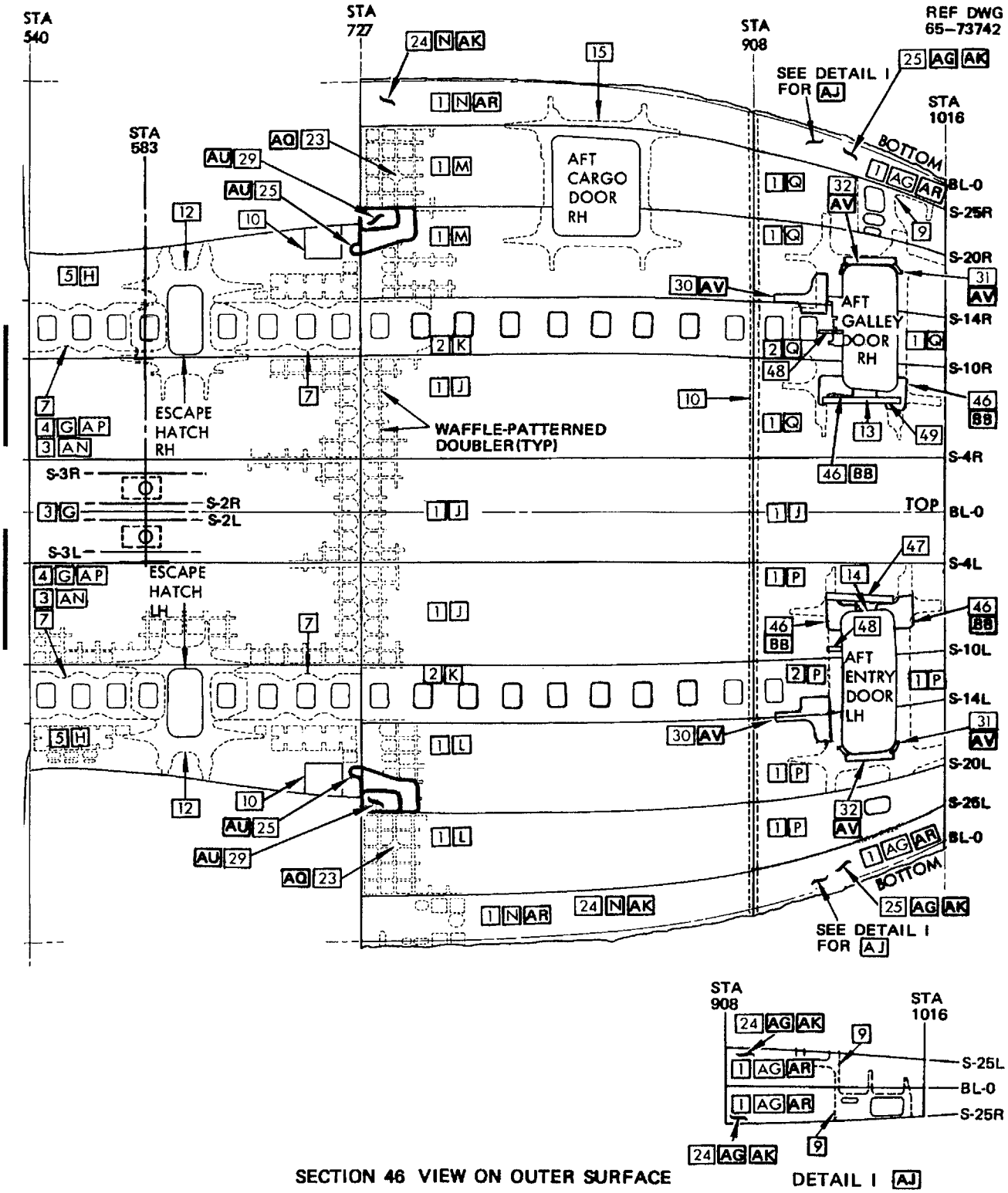

Skin Identification, 737-100 Airplanes
Figure 2 (Sheet 6)

REF DWG
65-73742

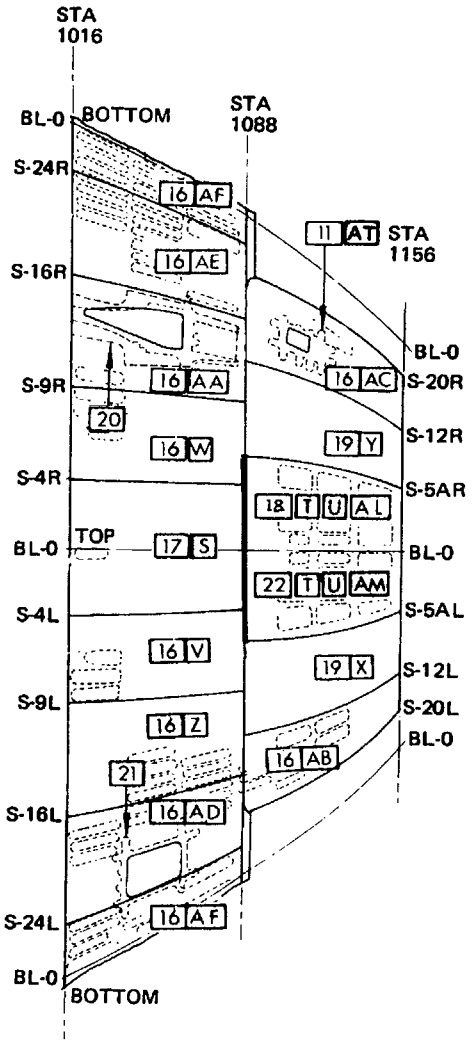

SECTION 48 VIEW ON OUTER SURFACE

Skin Identification, 737-100 Airplanes
Figure 2 (Sheet 7)

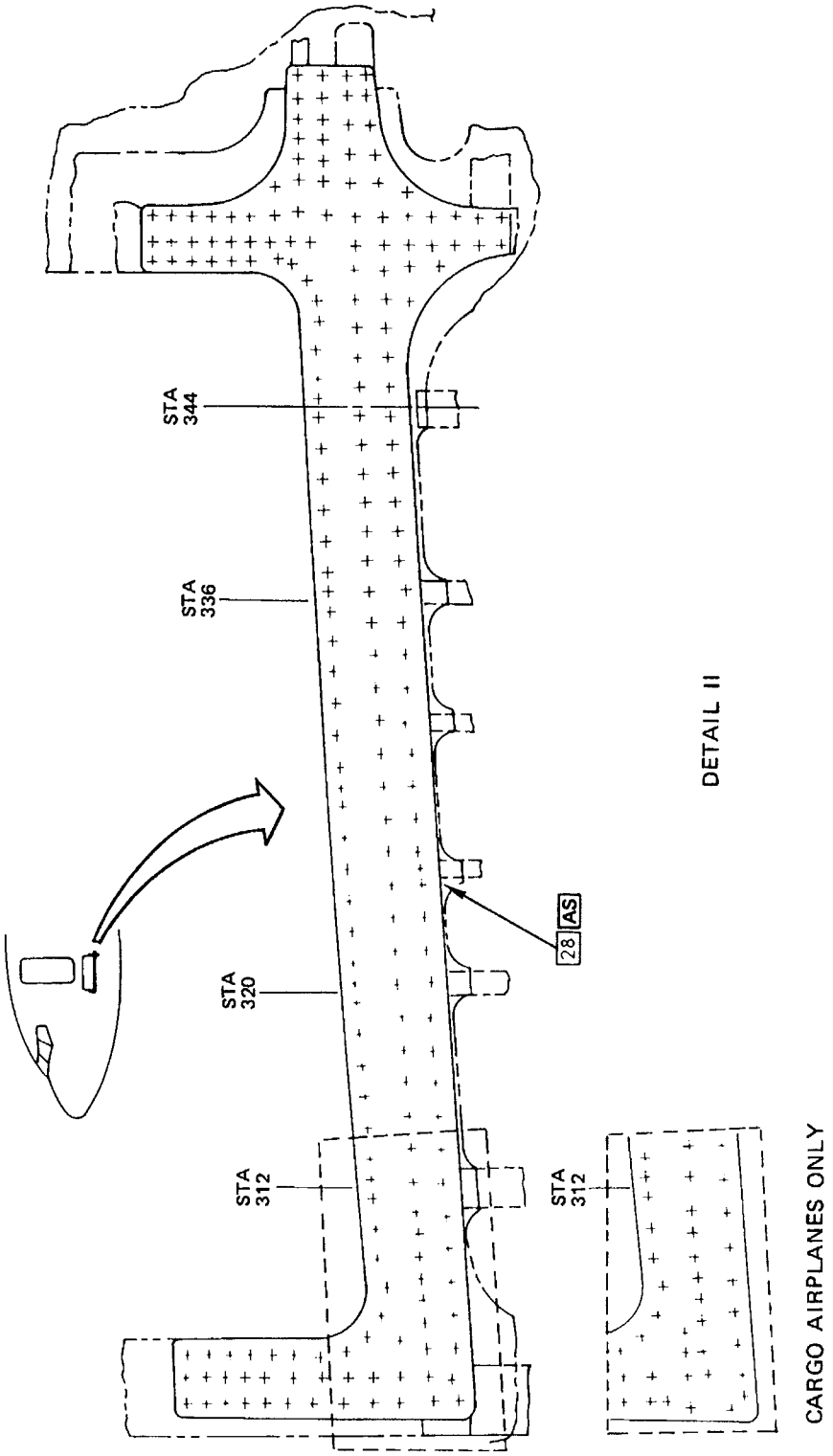

Skin Identification, 737-100 Airplanes
Figure 2 (Sheet 8)

REF DWG
65-21082

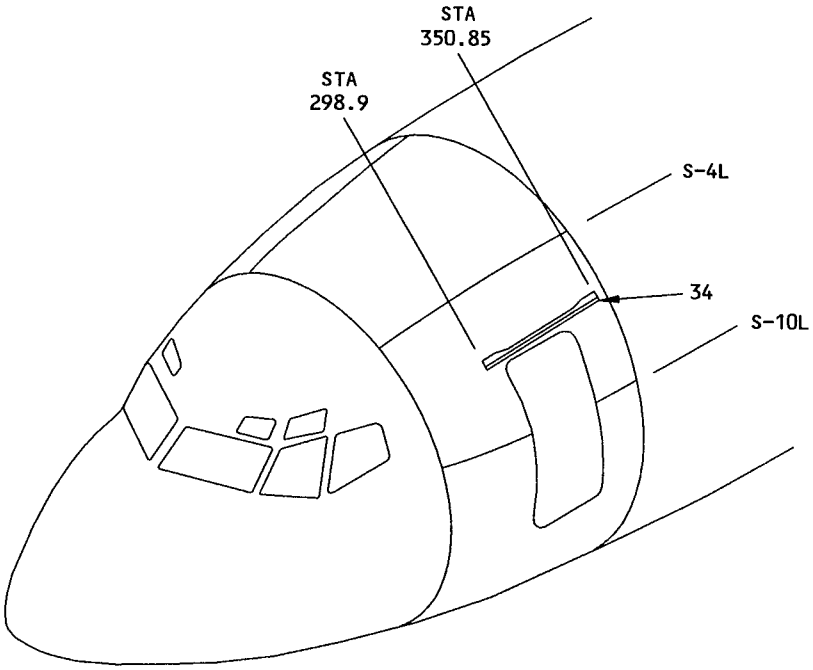

LEFT SIDE VIEW

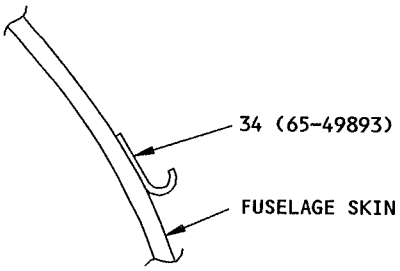

SECTION THRU RAIN GUTTER

DETAIL III

Skin Identification 737-100 Airplanes
Figure 2 (Sheet 10)

REF DWG
65-498993

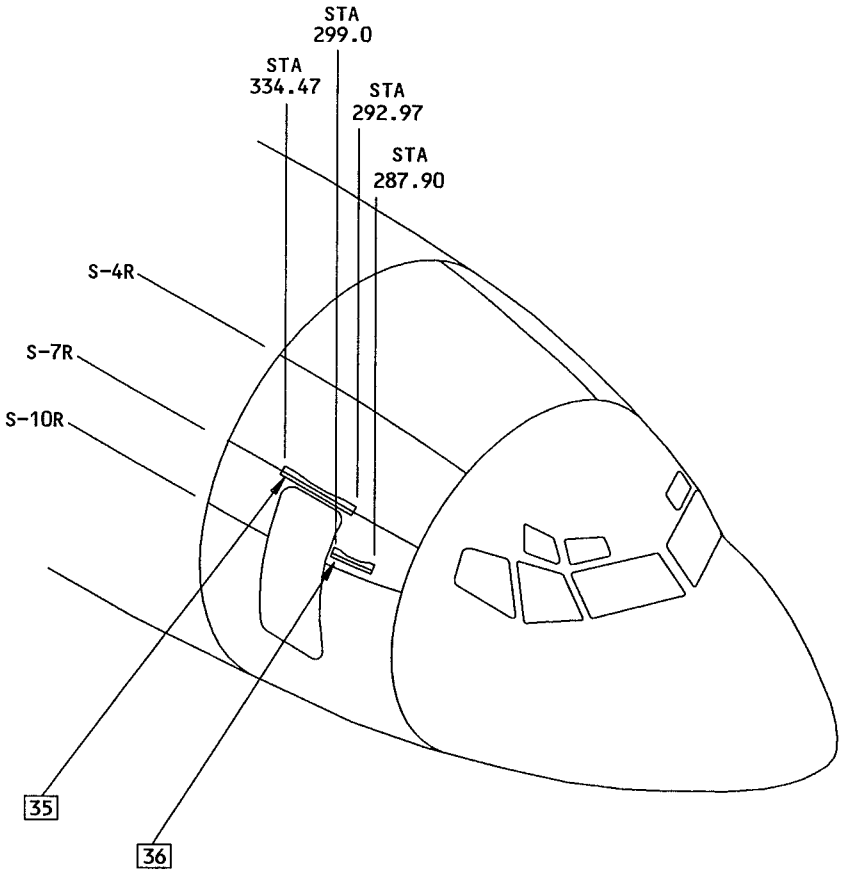

RIGHT SIDE VIEW

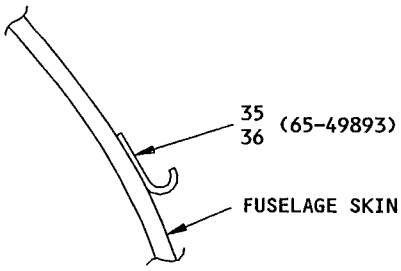

SECTION THRU RAIN GUTTER

DETAIL IV

Skin Identification 737-100 Airplanes
Figure 2 (Sheet 11)

A67410

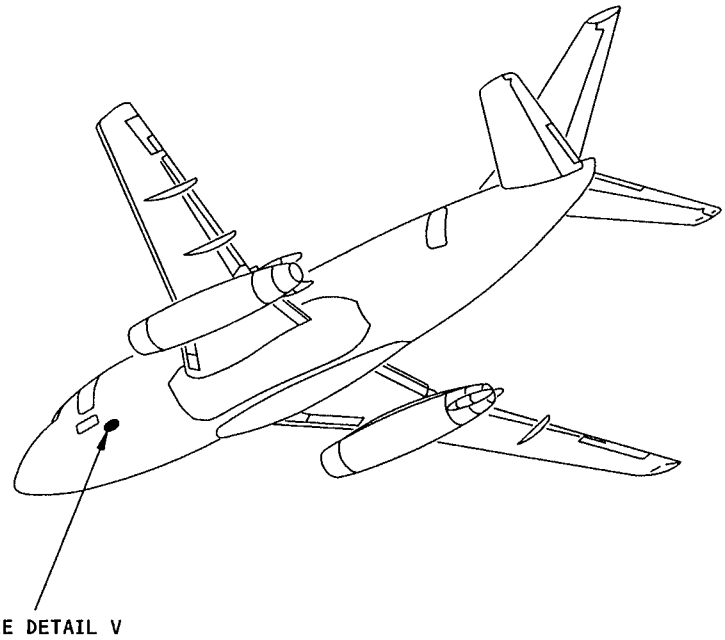

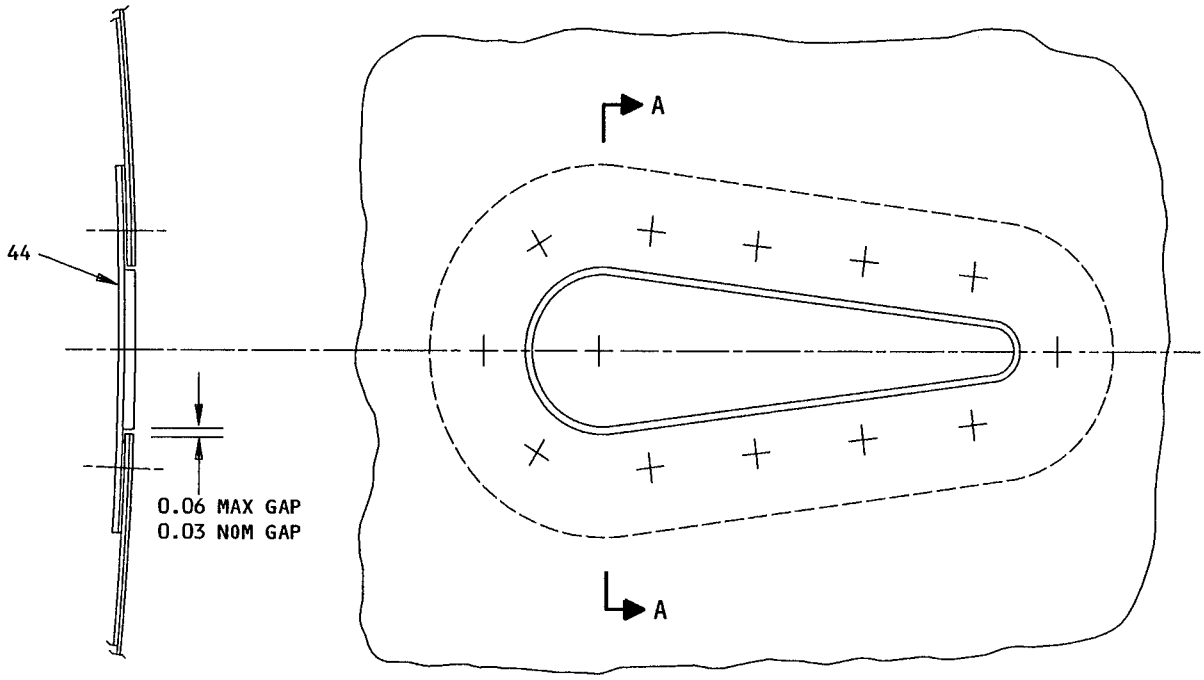

DETAIL V AW

Skin Identification 737-100 Airplanes
Figure 2 (Sheet 12)

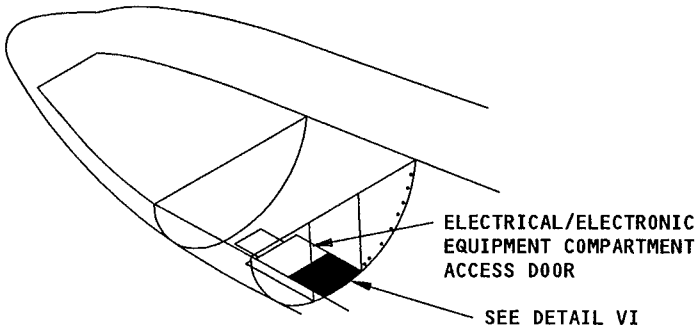

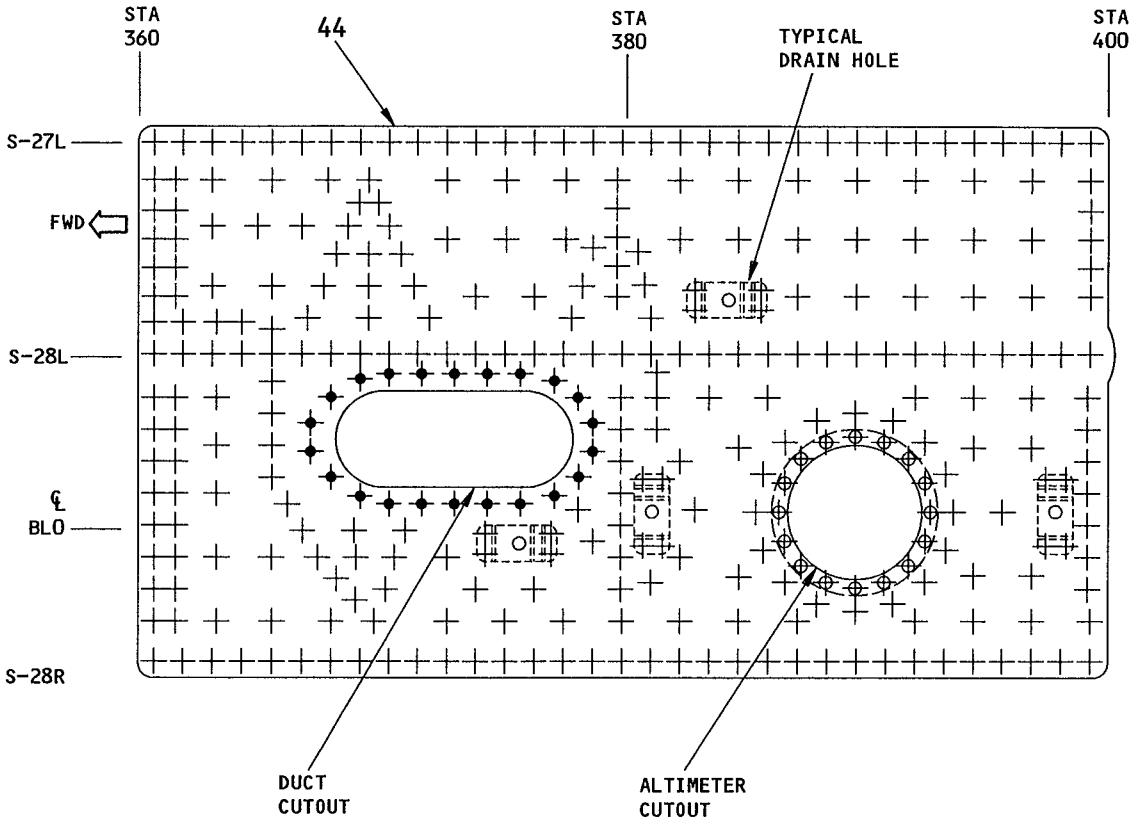

DETAIL VI AX

Skin Identification 737-100 Airplanes
Figure 2 (Sheet 13)

REF DWG
65-73742

PLAN VIEW OF OUTSIDE SURFACE

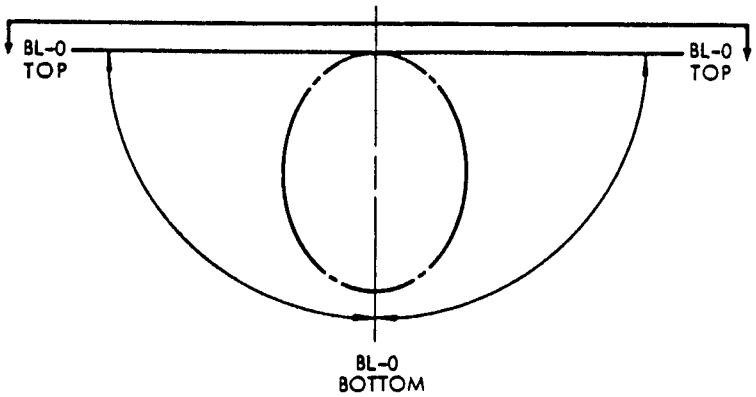

ITEM	MATERIAL	REPAIR FIG. NO.
1	0.036 SKIN + 0.036 DBLR BONDED CLAD 2024-T3 SHEETS	
2	0.040 SKIN + 0.040 DBLR BONDED CLAD 2024-T3 SHEETS	
3	0.040 SKIN + 0.036 DBLR BONDED CLAD 2024-T3 SHEETS	
4	0.045 SKIN + 0.036 DBLR BONDED CLAD 2024-T3 SHEETS	
5	0.063 SKIN + 0.056 DBLR BONDED CLAD 2024-T3 SHEETS	
6	0.020 TRIPLER CLAD 2024-T3 SHEET	
7	0.025 TRIPLER CLAD 2024-T3 SHEET	
8	0.032 TRIPLER CLAD 2024-T3 SHEET	
9	0.036 TRIPLER CLAD 2024-T3 SHEET	
10	0.050 STRAP (OR DBLR) CLAD 2024-T3 SHEET	

ITEM	MATERIAL	REPAIR FIG. NO.
11	0.063 STRAP 2024-T3 OR T4 SHEET	
12	0.071 STRAP CLAD 2024-T3 SHEET	
13	0.090 STRAP 2024-T42 SHEET	
14	0.100 STRAP 2024-T3 OR T4 SHEET	
15	0.125 STRAP 2024-T3 SHEET	
16	0.090 STRAP 2024-T3 SHEET	
17	0.080 TRIPLER CLAD 2024-T3 SHEET	
18	0.100 STRAP 2024-T42	
19	0.032 SKIN + 0.020 DBLR BONDED CLAD 2024-T3 SHEETS	
20	0.036 SKIN + 0.025 DBLR BONDED CLAD 2024-T3 SHEETS	

Skin Identification, 737-200 and 737-200C Airplanes
Figure 3 (Sheet 1)

ITEM	MATERIAL	REPAIR FIG.NO.
21	0.040 SKIN + 0.020 DBLR BONDED CLAD 2024-T3 SHEETS	
22	0.056 SKIN CLAD 2024-T3	
23	0.032 STRAP CLAD 2024-T3	
24	0.036 STRAP CLAD 2024-T3	
25	0.063 CLAD 2024-T3	
26	0.071 SKIN + 0.063 DBLR BONDED CLAD 2024-T3 SHEETS	
27	0.036 SKIN + 0.036 DBLR + 0.028 TRIPLER BONDED CLAD 2024-T3 SHEETS	
28	0.040 SKIN + 0.032 DBLR BONDED CLAD 2024-T3 SHEETS	
29	0.125 STRAP + 0.032 STRAP DBLR BONDED 2024-T3 SHEETS	
30	0.032 SKIN + 0.020 DBLR + 0.016 TRIPLER BONDED CLAD 2024-T3 SHEETS	
31	0.040 C.P. TITANIUM MIL-T-9046, TYPE I COMP C (ANNEALED)	
32	0.040 CLAD 2024-T3	
33	INBOARD TRACK FITTING FORGING 7075-T73	

ITEM	MATERIAL	REPAIR FIG.NO.
34	0.063 SKIN CLAD 2024-T3 SHEET	
35	0.020 DOUBLER CLAD 2024-T3 SHEET	
36	0.032 DOUBLER CLAD 2024-T3	
37	0.180 DOUBLER CLAD 2024-T3	
38	0.016 CAP STRIP AISI 301 ANNEALED	
39	0.112 STRAP 2024-T3	
40	0.071 TRIPLER CLAD 2024-T3	
41	0.100 DOUBLER CLAD 2024-T3	
42	0.090 DOUBLER CALD 2024-T3	
43	0.063 SKIN + 0.050 DOUBLER CLAD 2024-T3	
44	0.080 DOUBLER CLAD 2024-T3	
45	0.050 TRIPLER CLAD 2024-T3	
46	MACHINED AND FORMED 0.50, 2024-T351 PLATE	
47	0.063 CLAD 2024-T3, CHEM MILLED	
48	0.071 CLAD 2024-T3, CHEM MILLED	
49	0.056 CLAD 2024-T3, CHEM MILLED	

Skin Identification, 737-200 and 737-200C Airplanes
Figure 3 (Sheet 2)

ITEM	MATERIAL	REPAIR FIG. NO.
50	0.040 DBLR CLAD 7075-T6	
51	DOOR ASSY 0.050 SKIN CLAD 7075-T6	
	0.040 PLATE CLAD 7075-T6	
	0.040 ANGLE CLAD 7075-T6	
	BAC1511-468 RADIUS FILLER 2024-T4	
52	CORNER REVEAL 356-T6 AL ALLOY	
53	0.040 A1S1 TYPE 321 ANNEALED	
54	0.071 CHEM MILLED SKIN CLAD 7075-T6 (CHEM MILLED TO 0.056-0.066)	
55	0.080 CHEM MILLED SKIN CLAD 2024-T3 (CHEM MILLED TO 0.049-0.058)	
56	0.050 DOUBLER CLAD 2024-T3	
57	BAC1496-356 X 48.00 LG. CLAD 2024-T3	
58	BAC1496-356 X 12.10 LG. CLAD 2024-T3	
59	BAC1496-356 X 41.50 LG. CLAD 2024-T3	
60	BAC1496-356 X 11.10 LG. CLAD 2024-T3	
61	0.063 DBLR CLAD 2024-T3 SHEET	
62	0.063 MOUNTING PLATE CLAD 2024-T3 SHEET	

ITEM	MATERIAL	REPAIR FIG. NO.
63	0.063 EXTERNAL DBLR CLAD 2024-T3 SHEET	
64	0.025 ADAPTER CLAD 2024-T3 SHEET	
65	0.25 COVERPLATE 2024-T351 PLATE	
66	0.080 EXTERNAL DBLR CLAD 2024-T3 SHEET	
67	0.050 RING DBLR CLAD 2024-T3 SHEET	
68	0.025 ADAPTER CLAD 2024-T42 SHEET	
69	0.25 COVERPLATE 2024-T351 PLATE	
70	0.100 EXTERNAL DBLR 2024-T3 SHEET	
71	BAC1496-356 X 43.40 LG., CLAD 2024-T3	
72	BAC1496-356 X 12.10 LG., CLAD 2024-T3	
73	BAC1496-356 X 42.40 LG., CLAD 2024-T3	

Skin Identification, 737-200 and 737-200C Airplanes
Figure 3 (Sheet 3)

NOTES

[A] UA

[B] LH

[C] LH, PI

[D] DELETED

[E] DELETED

[F] FOR AIRPLANES NOT LISTED IN [G]

[G] FOR AIRPLANES UP TO CUM LINE NUMBER 224 AND CUM LINE NUMBERS 226 THRU 245, 251, 254, 263 THRU 265, 267, 274, 276

[H] FOR CUM LINE NUMBERS: 256, 263, 265, 294, 295 AND AIRPLANES WITH SB 53-1016 INCORPORATED

[I] FOR CUM LINE NUMBERS: 290, 294, 295, 297 THRU 316, 318, 320 THRU 322, 328, 332, 335

[J] FOR AIRPLANES WITH HF ANTENNA

[K] FORGINGS OF 7079-T6 MATERIAL HAVE BEEN REPLACED BY FORGINGS OF 7075-T73 IN PRODUCTION; 7075-T73 FORGINGS ARE RECOMMENDED WHEN EXISTING STOCKS OF 7079-T6 ARE EXHAUSTED

[L] FOR CUM LINE NUMBERS: 411, 419 THRU 431, 433 AND ON

[M] FOR CUM LINE NUMBERS: 1 THRU 410, 412 THRU 418, 432 NOT INCORPORATING SKIN REPLACEMENT PORTION OF SB 53-1042

[N] FOR CUM LINE NUMBERS: 456 AND ON

[O] FOR AIRPLANES WITH OXYGEN SERVICE PANELS

[P] FOR AIRPLANES LISTED IN [M] WITH SKIN REPLACEMENT PORTION OF SB 53-1042 INCORPORATED

[Q] FOR CUM LINE NUMBER 618

[R] FOR CUM LINE NUMBERS: 599, 640 THRU 654, 656 THRU 662, 664 THRU 687, 689 THRU 746, 748 THRU 759, 761 THRU 766, 768 THRU 778, 780 THRU 813, 815 THRU 820, 822, 824 THRU 833, 836 THRU 842, 844 THRU 852, 854, 856 THRU 860, 862 THRU 870, 872 THRU 880 AND ON THAT HAVE FORWARD AIRSTAIRS AND FORWARD AIRSTAIRS DOOR OR RELATED STRUCTURAL PROVISIONS (BOEING REF: P4501-P4799, P4801-P4999, P5001-P5499, PY032-PY035, PY054, PY055, PY104-PY110, PY211-PY220, PY223-PY230, PY232-PY240, PY282-PY285, PY287-PY290, PY291-PY299, PY412-PY420, PY601-PY610, PY613-PY620)

[S] FOR AIRPLANES INCORPORATING SKIN REINFORCEMENT PER SB 53-1058

[T] FOR AIRPLANES UP TO CUM LINE 1043

[U] FOR CUM LINE 1044 AND ON

[V] FOR CUM LINE NUMBERS: 768, 778, 786, 789, 801, 806, 819, 827, 840, 860, 878, 880 (BOEING REF: PL563-PL580)

[W] FOR CUM LINE NUMBERS: 6, 8, 12 THRU 14, 16, 18 THRU 22, 24, 25, 27 THRU 31

[X] FOR CUM LINE NUMBERS: 923 THRU 972

[Y] FOR CUM LINE NUMBERS: 973 AND ON

[Z] FOR CUM LINE NUMBERS: 1 THRU 433, 436, 437 WITH SB 57-1087 INCORPORATED

Skin Identification, 737-200 and 737-200C Airplanes
Figure 3 (Sheet 4)

C10431

NOTES (CONT)

[AA] FOR CUM LINE NUMBERS: 434, 435, 438 THRU 844 WITH SB 57-1137 INCORPORATED

[AB] FOR AIRPLANES INCORPORATING SKIN REINFORCEMENT PER SB 53-1077

[AC] FOR AIRPLANES WITH APU OIL FILLER ACCESS DOOR

[AD] FOR CUM LINE NUMBERS: 845 THRU 922 WITH SB 53-1073 INCORPORATED

[AE] FOR AIRPLANES WITH SB 53-1074 INCORPORATED

[AF] FOR BOEING REF: P8979 THRU P9995

[AG] FOR ALL 737-200C AIRPLANES NOT IN [AF]

[AH] FOR BOEING REF: P4344-P4399, P4801-P5499

[AI] FOR ALL 737-200 PASSENGER AIRPLANES NOT IN [AH]

[AJ] FOR CUM LINE NUMBERS: 1044 THRU 1299

[AK] FOR CUM LINE NUMBERS: 1313 THRU 1585

[AL] FOR CUM LINE NUMBERS: 1044 THRU 1530

[AM] FOR CUM LINE NUMBERS: 1565 THRU 1585

[AN] FOR CUM LINE NUMBERS: UP TO 214

[AO] FOR CUM LINE NUMBERS: 215, 216, 218 THRU 1042

[AP] FOR CUM LINE NUMBERS: 1 THRU 1572 WITH DOUBLER MODIFICATION PER SB 53-1117

[AQ] FOR AIRPLANES WITH FORWARD AIRSTAIRS REMOVED PER SB 52-1092

[AR] FOR BOEING REF: P4350 THRU P4399, P4801 THRU P5499, P5936, P5949 THRU P6999, P8979 THRU P9995

[AS] FOR CUM LINE NUMBERS: 969 THRU 1585

[AT] FOR AIRPLANES WITH ATC MODE "S" TRANSPONDER ANTENNA INSTALLED AS SHOWN IN SB 53-1142

[AU] FOR AIRPLANES WITH TCAS ANTENNA INSTALLED AS SHOWN IN SB 53-1142

[AV] FOR AIRPLANES WITH TCAS ANTENNA PROVISIONS AND TCAS ANTENNA IS NOT INSTALLED

[AW] FOR AIRPLANES WITH PREVENTIVE MODIFICATION AS SHOWN IN SB 737-53-1149 INSTALLED

Skin Identification, 737-200 and 737-200C Airplanes
Figure 3 (Sheet 5)

BOEING PROPRIETARY - Copyright © - Unpublished Work - See title page for details.

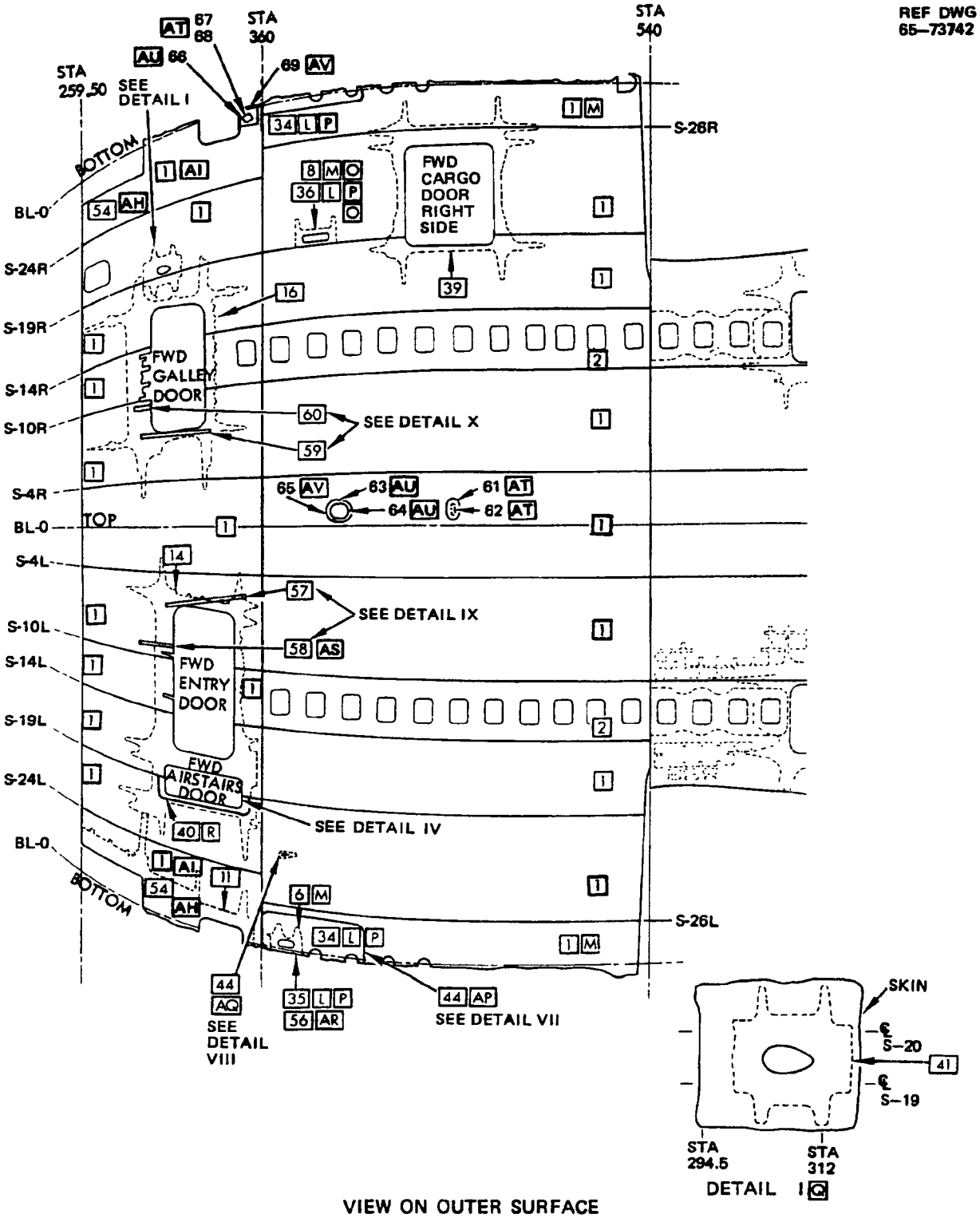

VIEW ON OUTER SURFACE

737-200 AIRPLANES – SECTION 41, FUS STA 259.50 TO FUS STA 360, AND SECTION 43

Skin Identification, 737-200 and 737-200C Airplanes
Figure 3 (Sheet 6)

BOEING PROPRIETARY - Copyright © - Unpublished Work - See title page for details.

REF DWG
65-73742

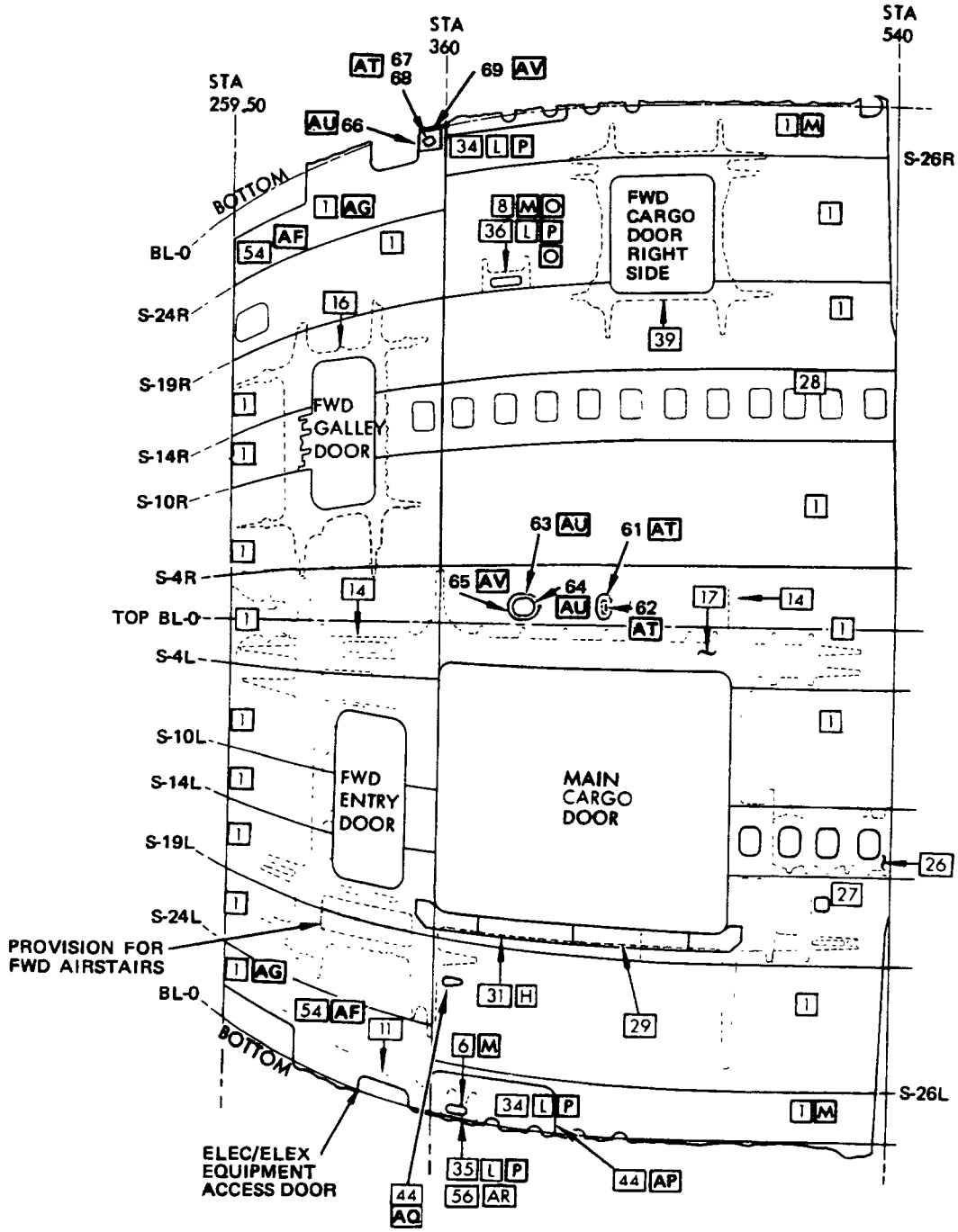

VIEW ON OUTER SURFACE

737-200C AIRPLANES - SECTION 41, FUS STA 259.50 TO FUS STA 360, AND SECTION 43

Skin Identification, 737-200 and 737-200C Airplanes
Figure 3 (Sheet 7)

BOEING PROPRIETARY - Copyright © - Unpublished Work - See title page for details.

REF DWG
65-73746
65-45771

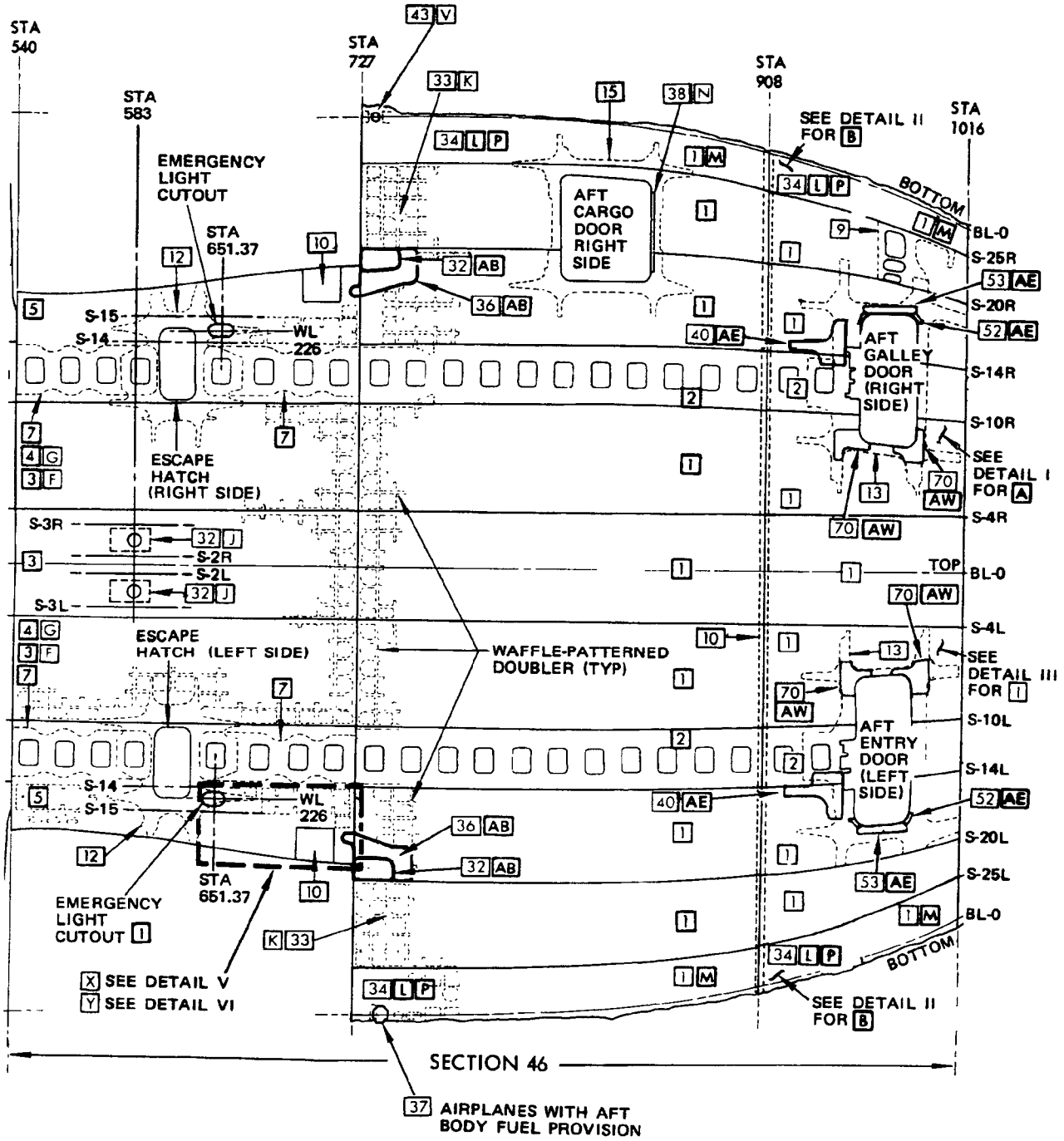

PLAN VIEW OF OUTSIDE SURFACE

Skin Identification, 737-200 and 737-200C Airplanes
Figure 3 (Sheet 8)

BOEING PROPRIETARY - Copyright © - Unpublished Work - See title page for details.

REF DWG
65-73742
65-46881
65-46882
65-73748

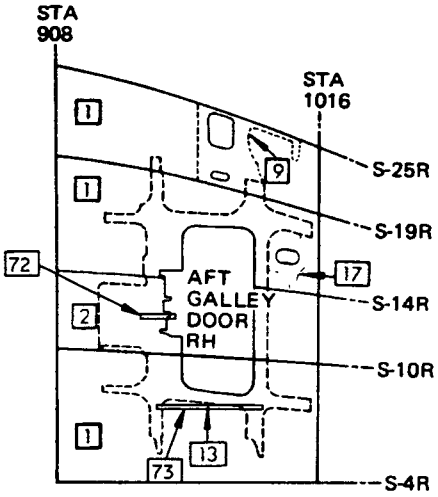

737-200
DETAIL I A

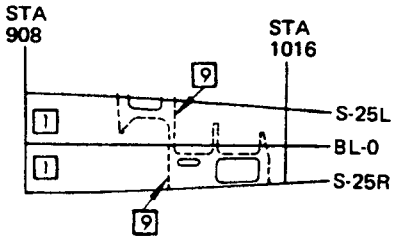

737-200 AND 727-200C
DETAIL II B

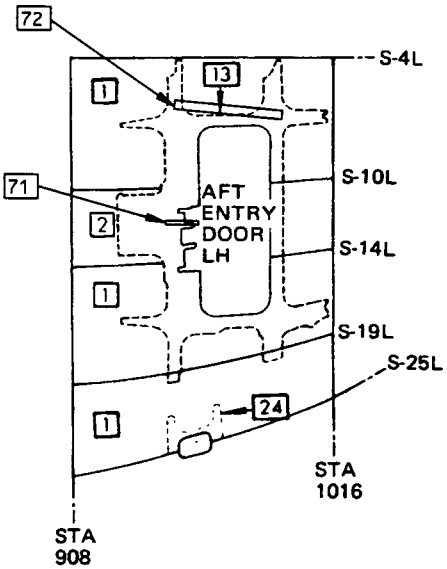

737-200
DETAIL III C

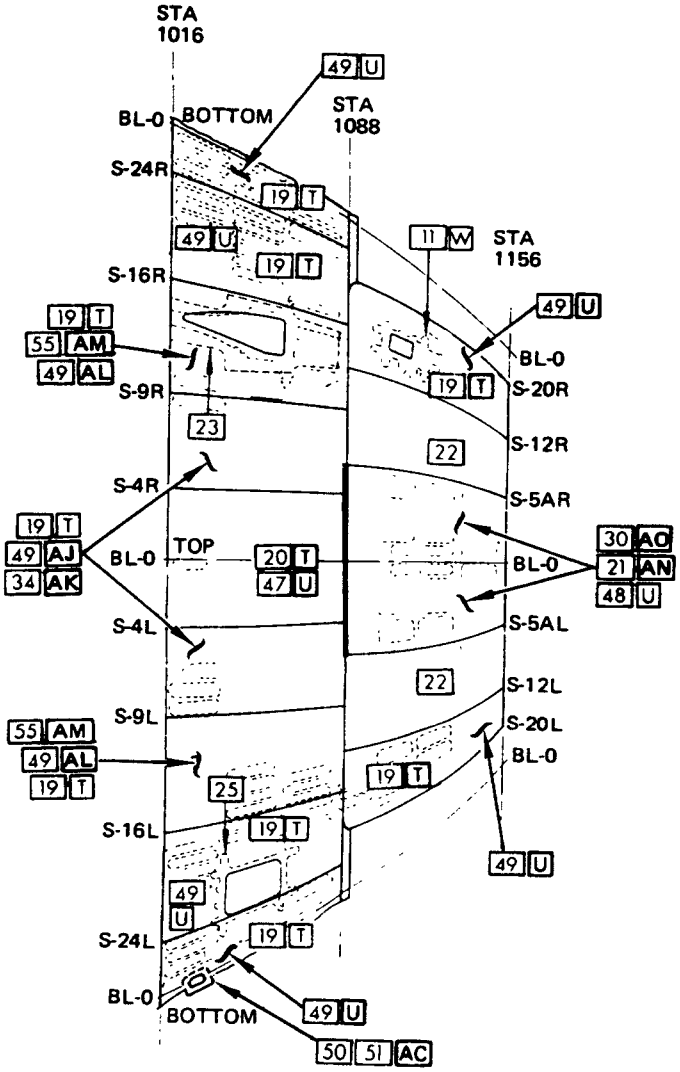

SECTION 48 VIEW ON OUTER SURFACE

Skin Identification, 737-200 and 737-200C Airplanes
Figure 3 (Sheet 9)

BOEING PROPRIETARY - Copyright © - Unpublished Work - See title page for details.

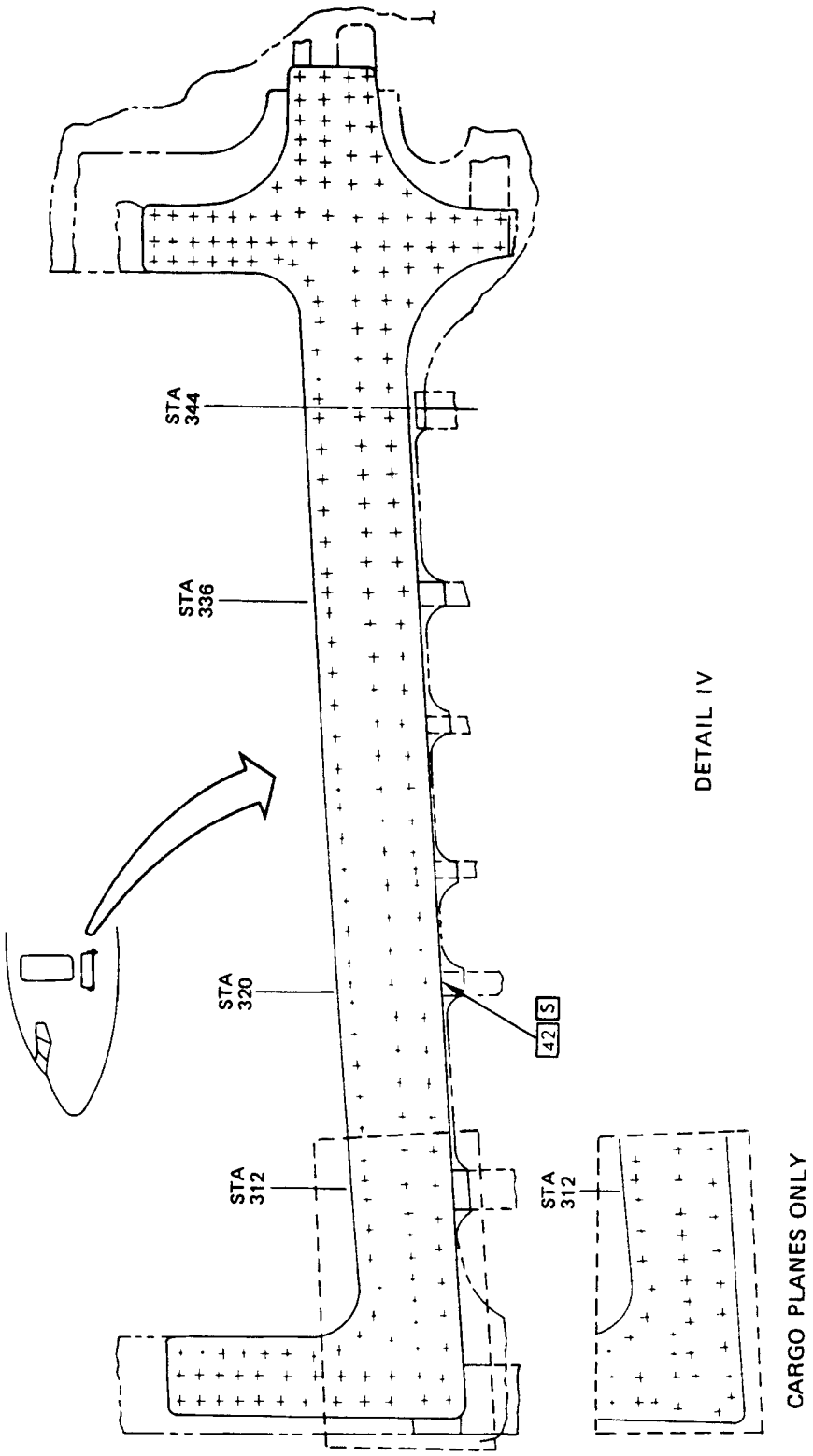

Skin Identification, 737-200 and 737-200C Airplanes
Figure 3 (Sheet 10)

BOEING PROPRIETARY - Copyright © - Unpublished Work - See title page for details.

REF DWG
65C25303
65C25675
65C26362
65C27352
65-45771

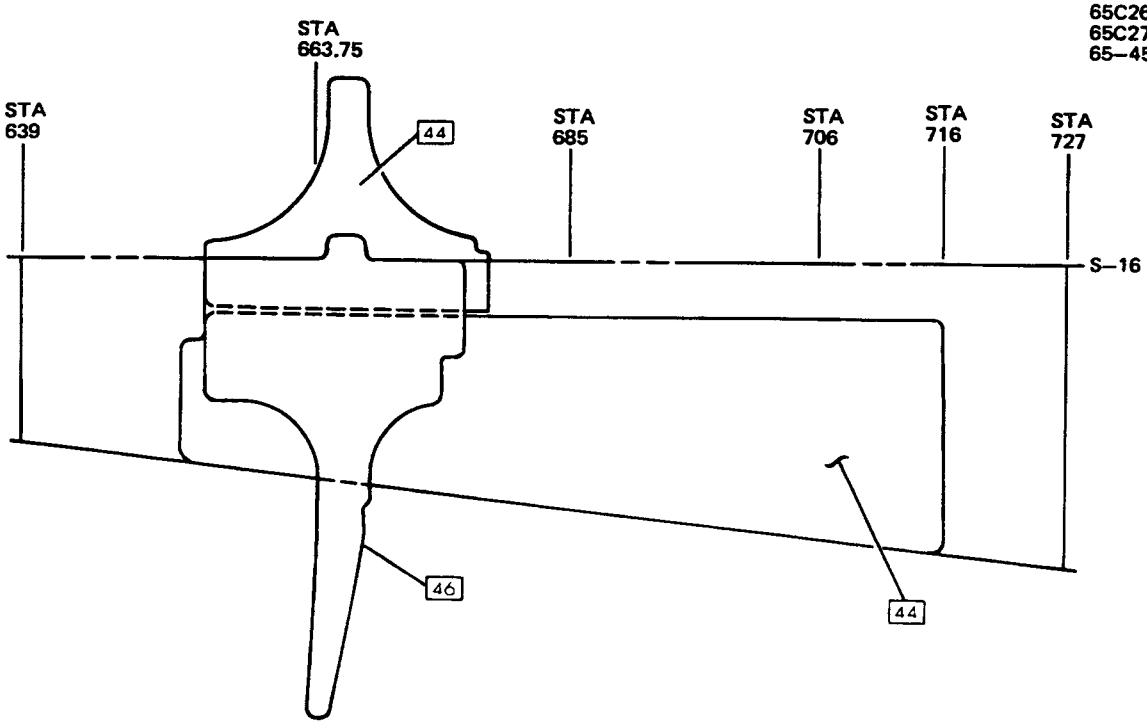

DETAIL V X Z AA

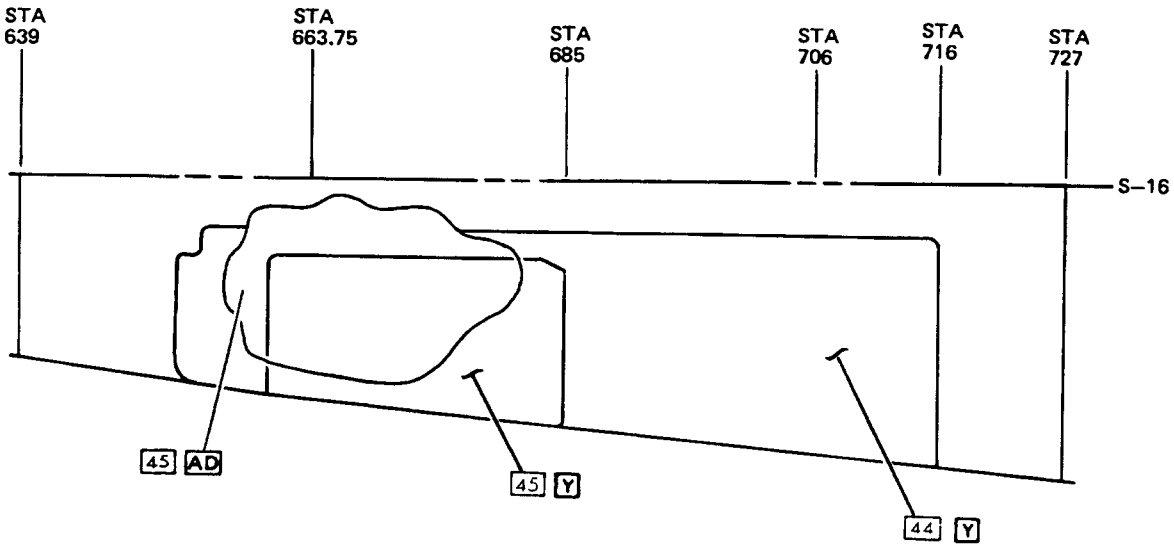

DETAIL VI

Skin Identification, 737-200 and 737-200C Airplanes
Figure 3 (Sheet 11)

BOEING PROPRIETARY - Copyright © - Unpublished Work - See title page for details.

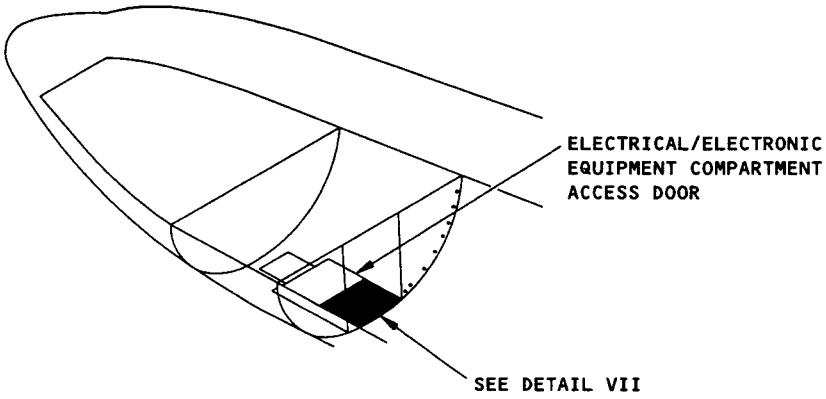

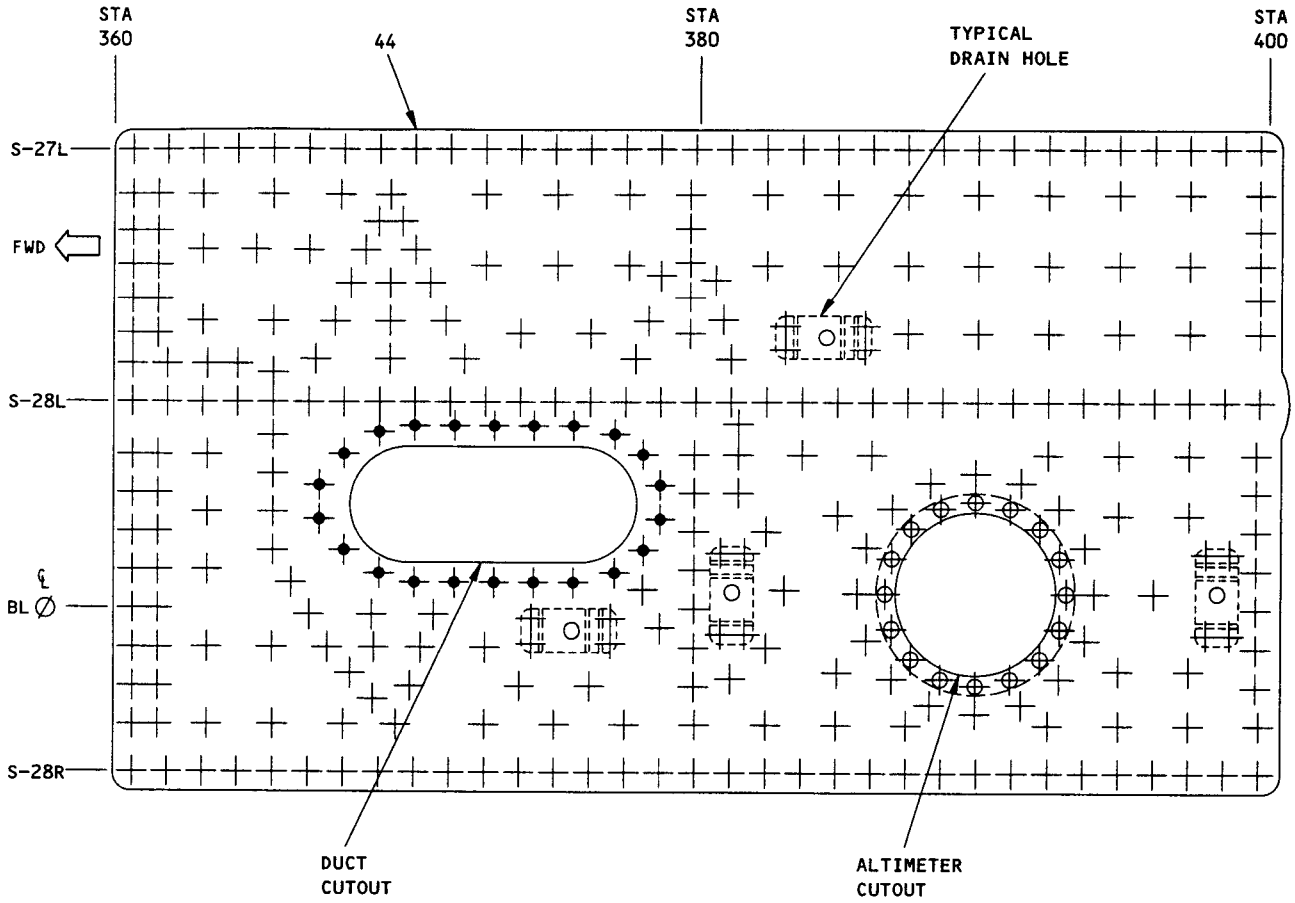

DETAIL VII AP

Skin Identification 737-200 and 737-200C Airplanes
Figure 3 (Sheet 12)

BOEING PROPRIETARY - Copyright © - Unpublished Work - See title page for details.

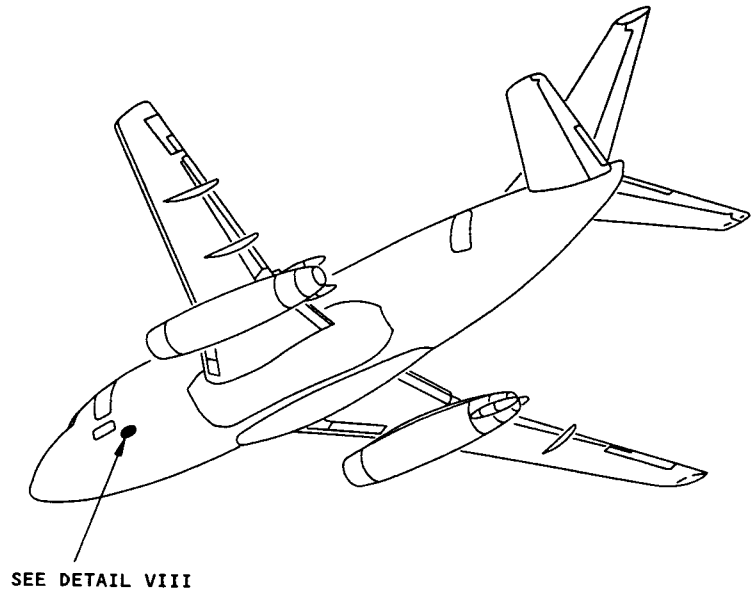

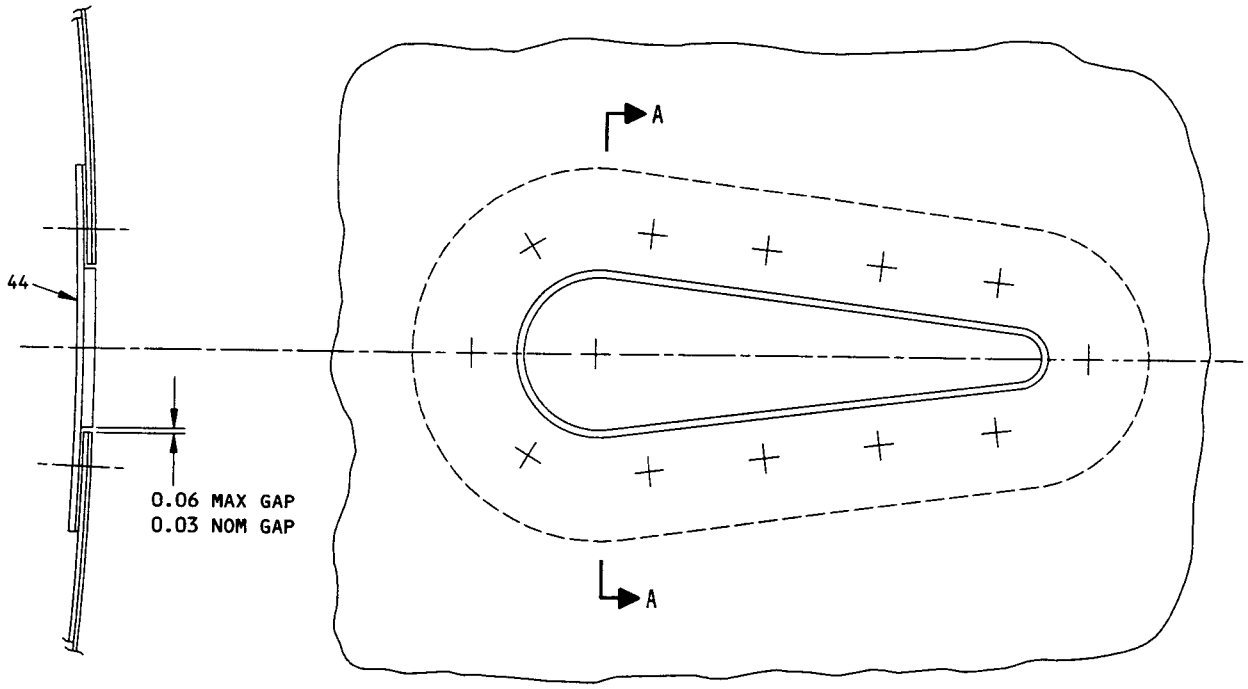

SECTION A-A

DETAIL VIII AQ

Skin Identification 737-200 and 737-200C Airplanes
Figure 3 (Sheet 13)

BOEING PROPRIETARY - Copyright © - Unpublished Work - See title page for details.

REF DWG
65-21082

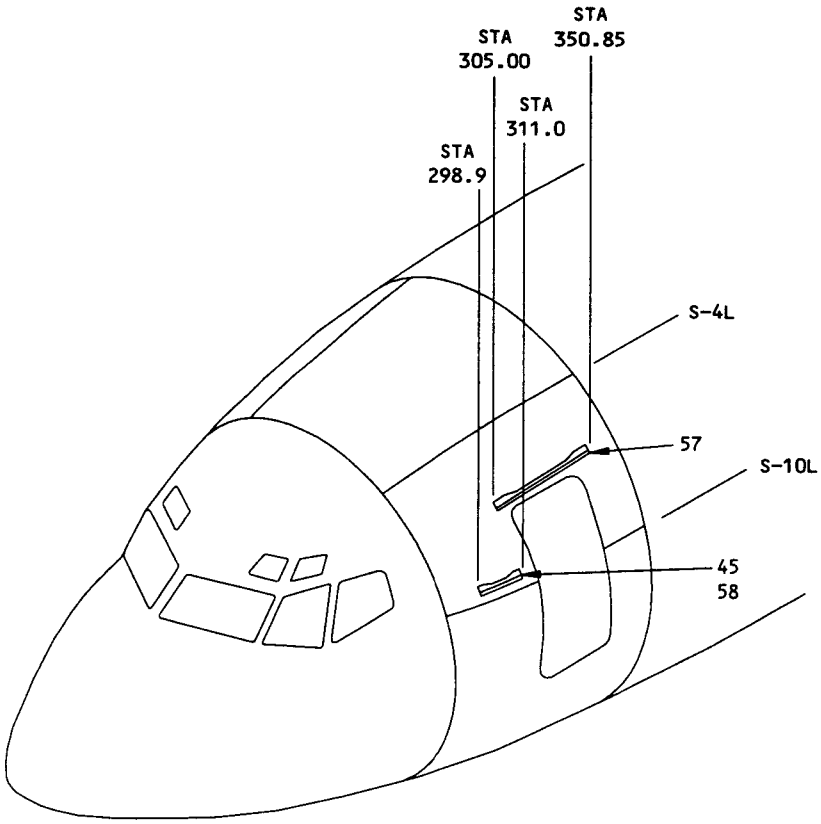

LEFT SIDE VIEW

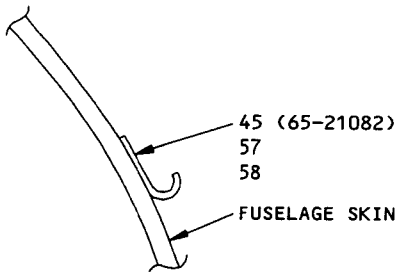

SECTION THRU RAIN GUTTER

DETAIL IX

Skin Identification 737-200 and 737-200C Airplanes
Figure 3 (Sheet 14)

A68498

BOEING PROPRIETARY - Copyright © - Unpublished Work - See title page for details.

REF DWG
65-49893

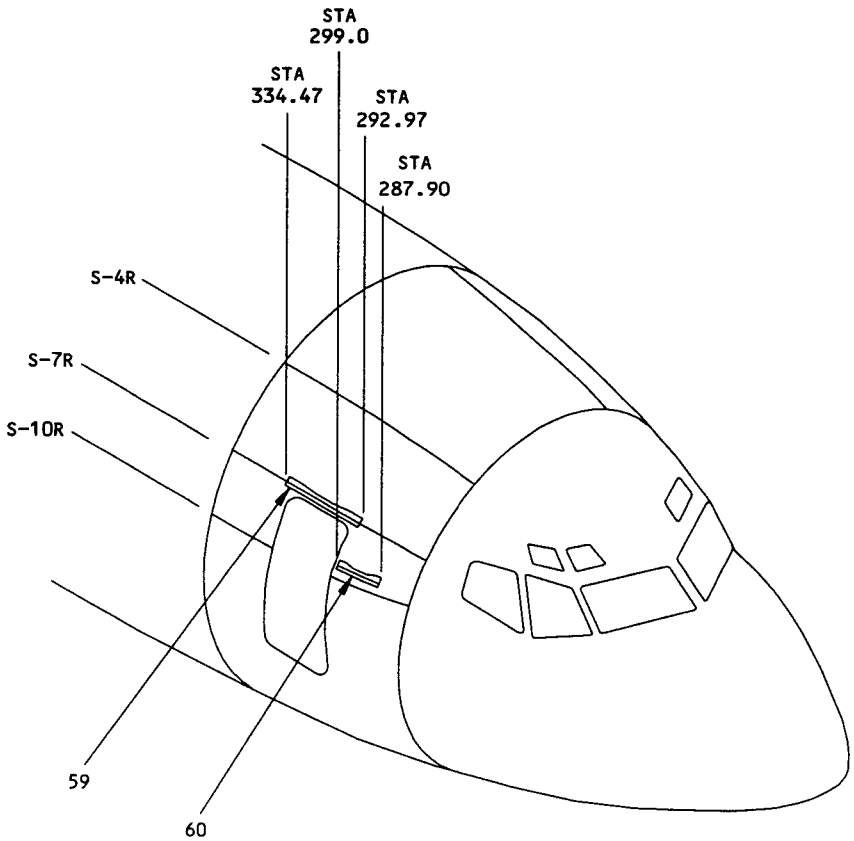

RIGHT SIDE VIEW

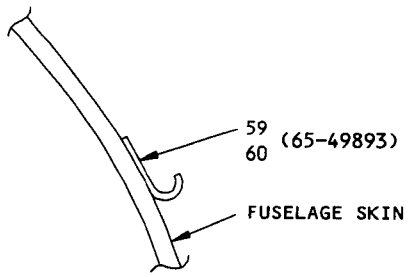

SECTION THRU RAIN GUTTER

DETAIL X

Skin Identification 737-200 and 737-200C Airplanes
Figure 3 (Sheet 15)

BOEING PROPRIETARY - Copyright © - Unpublished Work - See title page for details.

SERVICE BULLETIN REPAIRS - FUSELAGE SKIN

The following service bulletins contain skin repairs which are available for use where specific damage has been encountered Usually, the service bulletin also covers preventive modification data which operators are encouraged to use to eliminate the need for repair.

DAMAGED AREA	CUM LINE NUMBER EFFECTIVITY [A]	SB NUMBER
FUSELAGE - BODY SKIN LAP JOINT INSPECTION AND REPAIR	1 THRU 519	737-53A1039
FUSELAGE - LOWER LOBE HOT-BONDED SKIN PANEL INSPECTION, REPAIR, AND PANEL REPLACEMENT	1 THRU 410, 412 THRU 418, 432	737-53A1042
LOWER DOORWAY FORWARD AIRSTAIR STOWAGE DOOR	ALL 737 AIRPLANES WITH FORWARD AIRSTAIR STOWAGE DOORWAY, 1 THRU 598, 600 THRU 639	737-53-1058
FUSELAGE - AFT SKIN BETWEEN STA 727 TO 827 AND STRINGERS S-14 TO S-20	1 THRU 920	737-53-1065
FUSELAGE - ENTRY AND GALLEY DOORWAY SKIN CUTOUTS - INSPECTION, MODIFICATION, AND REPAIR	1 THRU 1014	737-53-1074
FUSELAGE - CIRCUMFERENTIAL BUTT SPLICES AND BONDED DOUBLERS - INSPECTION, REPAIR AND MODIFICATION	1 THRU 519	737-53-1076
FUSELAGE SKIN AFT OF BS 727 BETWEEN STRINGERS 18 AND 21	1 THRU 489	737-53-1077
FUSELAGE WINDOW BELT SKIN PANEL INSPECTION AND REPAIR	1 THRU 519	737-53-1078
FUSELAGE - LOWER LOBE SKIN PANEL INSPECTION, REPAIR AND MODIFICATION	1 THRU 1009	737-53-1087
FORWARD ENTRY DOOR CUTOUT STRUCTURE AT LOWER SILL	ALL 737 AIRPLANES PRIOR TO CUM LINE NUMBER 1061 WITH FORWARD AIRSTAIR DOOR CUTOUT	737-53-1083

[A] FOR AIRPLANES ON WHICH PREVENTIVE MODIFICATION HAS NOT BEEN ACCOMPLISHED

C10480

SERVICE BULLETIN REPAIRS - FUSELAGE SKIN (CONT)

The following service bulletins contain skin repairs which are available for use where specific damage has been encountered. Usually, the service bulletin also covers preventive modification data which operators are encouraged to use to eliminate the need for repair.

DAMAGED AREA	CUM LINE NUMBER EFFECTIVITY [A]	SB NUMBER
SKIN AREA AT BS 663.75 AND STRINGER S-18	1 THRU 433, 436, 437	737-57-1087
FUSELAGE SKIN AROUND THE FORWARD AIRSTAIR EXTERIOR CONTROL HANDLE CUTOUT	1 THRU 1203 WITH FORWARD AIRSTAIRS INSTALLED	737-53-1093
AFT ENTRY AND GALLEY DOORWAYS	1 THRU 1212,1223,1226	737-53-1094
FUSELAGE - BS 1156, SKIN INSPECTION, MODIFICATION AND REPAIR	215 THRU 1000, 1002 THRU 1006, 1008 THRU 1014, THRU 1021, 1023 THRU 1029, 1031 THRU 1036, 1038 THRU 1042	737-53-1095
FUSELAGE - BS 663.75 FRAME AT STRINGER 17 INSPECTION, REPAIR AND MODIFICATION	1 THRU 972	737-53-1110
FUSELAGE - SECTION 41 SKIN INSPECTION AND MODIFICATION OR REPAIR	1 THRU 330	737-53-1111
FUSELAGE - INSPECTION, MODIFICATION OR REPAIR OF SKIN AT AFT LOWER CORNER OF CONTROL CABIN NO. 3 WINDOW	1 THRU 330	737-53-1115
FUSELAGE - FORWARD GALLEY DOORWAY UPPER CORNERS INSPECTION, REPAIR, AND PREVENTIVE MODIFICATION	1 THRU 1560	737-53-1116
FUSELAGE - LOWER LOBE SKIN, COOLING AIR DUCT CUTOUT, BS 373	1 THRU 1572	737-53-1117
CHEM-MILLED SKIN PAD UNDER STRINGER 9R FROM BS 559 TO BS 606.46	1299 THRU 1405, 1415	737-53-1118
EDGE OF LOWER SKIN PANEL UNDER STRINGER 10R FROM BS 597 TO BS 663.75	1414, 1418	737-53-1118

[A] FOR AIRPLANES ON WHICH PREVENTIVE MODIFICATION HAS NOT BEEN ACCOMPLISHED

C10485

SERVICE BULLETIN REPAIRS - FUSELAGE SKIN (CONT)

The following service bulletins contain skin repairs which are available for use where specific damage has been encountered. Usually, the service bulletin also covers preventive modification data which operators are encouraged to use to eliminate the need for repair.

DAMAGED AREA	CUM LINE NUMBER EFFECTIVITY [A]	SB NUMBER
FUSELAGE - BONDED DOUBLERS - INSPECTION AND REPAIR FOR DELAMINATION ABOVE STRINGER 26 BETWEEN BS 259 AND 1016	520 THRU 610	737-53-1124
FUSELAGE - BS 661 TO 670, STRINGER 17 TO 18A SKIN	434, 435, 438 THRU 844	737-57-1137
FUSELAGE - AFT GALLEY AND AFT ENTRY DOORWAY, UPPER CORNER SKIN CUTOUT INSPECTION, REPAIR AND MODIFICATION	ALL 737 AIRPLANES	737-53-1149
FUSELAGE - VHF ANTENNA SUPP0RT STRUCTURE INSPECTION, MODIFICATION AND REPAIR	1 THRU 2509	737-53-1159
FUSELAGE - CARGO AIRPLANES - LOWER LOBE LEFT SIDE FRAMES BETWEEN BODY STATIONS 360 AND 500B INSPECTION, MODIFICATION, AND REPAIR	ALL 737-200 CARGO AIRPLANES	737-53A1160
FUSELAGE - BONDED SKIN DOUBLERS (TEARSTRAPS) - DELAMINATION INSPECTION AND REPAIR	611 THRU 1585	737-53-1179
FUSELAGE - SKIN - INSPECTIONS OF THE FUSELAGE SKIN FOR SCRIBE LINES	ALL	737-53A1262

[A] FOR AIRPLANES ON WHICH PREVENTIVE MODIFICATION HAS NOT BEEN ACCOMPLISHED

BOEING PROPRIETARY - Copyright © - Unpublished Work - See title page for details.

APPLICABILITY

THIS REPAIR IS NOT APPLICABLE TO SECTIONS 41, 43 AND 46. SEE FIGURE 48 OR FIGURE 49.

REPAIR INSTRUCTIONS

External repair as shown allows either solid rivet or blind rivet repair. Refer to applicable repair instructions.

SOLID RIVET REPAIR

1. Trim the damaged skin to form a rectangular shape. Make the cutout parallel to a stringer centerline.
2. Return all indented or projecting skin to contour. Remove all burrs, nicks, scratches, sharp edges or corners from damaged skin.
3. Make the repair plate and drill the fastener holes.
4. Alodize the cut edges of new and existing parts.
5. Install the repair plate with the fasteners specified in Table I, making a faying surface seal in accordance with SRM 53-30-4. A bead of sealant should be apparent all around cutout in skin after installation. Where there is sufficient sealant squeezed out it may be formed into a fillet, otherwise an additional fillet seal should be applied.
6. Restore the finish according to AMM 51-20.

BLIND RIVET REPAIR

NOTE: Refer to general notes for fastener seating and inspection requirements prior to making blind rivet repair.

1. Trim the damaged skin to form a rectangular shape. Make the cutout parallel to a stringer centerline.
2. Return all indented or projecting skin to contour. Remove all burrs, nicks, scratches, sharp edges or corners from damaged skin.
3. Make the repair plate and drill the fastener holes.
4. Alodize the cut edges of new and existing parts.
5. Prime the alodized edges of existing parts and the interior surfaces of new parts.
6. Install the repair plate with the fasteners specified in Table II or III, making a faying surface seal in accordance with SRM 53-30-4.

   NOTE: Special care should be taken when applying sealant to faying surfaces to ensure that a bead of sealant will be squeezed out all around the skin cutout upon repair plate installation.
7. Restore the finish according to AMM 51-21.

OBSOLETE
DO NOT USE AFTER MARCH 10, 2004
SEE FIGURE 48, 49 OR 50 AS
APPLICABLE

Fuselage Skin - External Repair Between Stringers
Figure 1 (Sheet 1)

BOEING PROPRIETARY - Copyright © - Unpublished Work - See title page for details.

NOTES

- BLIND RIVET REPAIRS SHOULD NOT BE USED WHERE DOUBLERS, TRIPLERS AND NONTYPICAL STRUCTURE EXIST UNLESS IT CAN BE DEFINITELY ESTABLISHED THAT THE BLIND RIVETS WILL BE PROPERLY SEATED ON THE INTERNAL STRUCTURE AND THAT ADEQUATE RIVET SPACING AND EDGE MARGINS ARE MAINTAINED.
- BLIND RIVET REPAIRS MUST BE EXAMINED 3,000 FLIGHT CYCLES AFTER INSTALLATION, AND EACH 2,500 FLIGHT CYCLES AFTER THAT. IT IS RECOMMENDED THAT BLIND RIVET REPAIRS BE REPLACED WITH SOLID FASTENER REPAIRS BY THE SUBSEQUENT OVERHAUL. BLIND RIVET REPAIRS MUST BE REPLACED WITH SOLID FASTENER REPAIRS 10,000 FLIGHT CYCLES OR LESS AFTER THE INITIAL INSTALLATION. [E]
- WHEN BLIND RIVETS ARE REPLACED WITH SOLID RIVETS, USE THE SOLID RIVETS SPECIFIED IN TABLE I EXCEPT THAT THE SOLID RIVETS MUST BE A MINIMUM OF 1/32 LARGER IN DIAMETER THAN THE NOMINAL SIZE OF THE BLIND RIVETS BEING REPLACED.
- REFER TO THE FOLLOWING WHEN MAKING THIS REPAIR:

  51-10-2 FOR PROTECTIVE TREATMENT OF METAL

  51-30 FOR FASTENER CODE, REMOVAL AND INSTALLATION, HOLE SIZES, EDGE MARGINS AND COUNTERSINKING

  51-70 FOR LIMITATIONS FOR EXTERNAL REPAIRS AND AERODYNAMIC SMOOTHNESS REQUIREMENTS

[A] SAME MATERIAL AND HEAT-TREAT AS ORIGINAL SKIN AND TWO GAGES GREATER, MIN GAGE 0.050

[B] REPAIRS MAY BE MADE WITH PROTRUDING HEAD FASTENERS AT THE OPERATOR'S OPTION. REFER TO 51-70 FOR AERODYNAMIC SMOOTHNESS REQUIREMENTS

[C] WHEN USING MS20426 FASTENERS THE COUNTERSINK DEPTH MUST NOT EXCEED THAT WHICH IS GIVEN FOR BACR15CE FASTENERS

[D] INSTALL IN HOLES SWABBED WITH BMS 5-95 SEALANT

[E] THIS REPAIR HAS FAA (DER) APPROVAL CONTINGENT ON ACCOMPLISHMENT OF THE INSPECTIONS AT THE INTERVALS CONTAINED HEREIN

SYMBOLS

+ EXISTING FASTENER LOCATIONS. REFER TO NOTES ON FACE OF DRAWING

⊕ REPAIR FASTENER LOCATIONS. SEE TABLE I, TABLE II OR TABLE III AS APPLICABLE

REPAIR MATERIAL			
PART		QTY	MATERIAL
[1]	PLATE	1	[A]

OBSOLETE
DO NOT USE AFTER MARCH 10, 2004
SEE FIGURE 48, 49 OR 50 AS
APPLICABLE

Fuselage Skin - External Repair Between Stringers
Figure 1 (Sheet 2)

BOEING PROPRIETARY - Copyright © - Unpublished Work - See title page for details.

ORIGINAL SKIN GAGE	PREFERRED FASTENER	OPTIONAL FASTENER [C]	SPACING P	EDGE MARGIN
0.036–0.045	BACR15CE5D	MS20426D5	1.56–1.61	0.39
0.050–0.063	BACR15CE6D	MS20426D6	1.87–1.94	0.47
0.071	BACR15CE8D	MS20426D8 MS20470D [B]	2.38–2.56	0.63

FOR SOLID RIVET REPAIR ONLY

TABLE I

ORIGINAL SKIN GAGE	PREFERRED FASTENER [D]	NUMBER OF ROWS		SPACING P	EDGE MARGIN
		LONGITUDINAL	CIRCUMFERENTIAL		
0.036–0.045	NAS1738E4	3	3½	1.56–1.61	0.32
0.050	NAS1738E5	3	3½	1.87–1.94	0.32
0.063	NAS1738E5	4	4½	1.87–1.94	0.36
0.071	NAS1738E6	4	4½	2.38–2.56	0.36

FOR BLIND RIVET REPAIR ONLY
(OPTIONAL TO TABLE III)

TABLE II

ORIGINAL SKIN GAGE	PREFERRED FASTENER [D]	NUMBER OF ROWS		SPACING P	EDGE MARGIN
		LONGITUDINAL	CIRCUMFERENTIAL		
0.036–0.040	1/8 DIA CR3212	3	3 1/2	1.56–1.61	0.32
0.045	5/32 DIA CR3212	3	3 1/2	1.56–1.61	0.32
0.050	5/32 DIA CR3212	3	3 1/2	1.87–1.94	0.32
0.063	3/16 DIA CR3212	4	4 1/2	1.87–1.94	0.36
0.071	3/16 DIA CR3212	4	4 1/2	2.38–2.56	0.36

FOR BLIND RIVET REPAIR ONLY
(OPTIONAL TO TABLE II)

TABLE III

Fuselage Skin - External Repair Between Stringers
Figure 1 (Sheet 3)

OBSOLETE
DO NOT USE AFTER MARCH 10, 2004
SEE FIGURE 48, 49 OR 50 AS
APPLICABLE

BOEING PROPRIETARY - Copyright © - Unpublished Work - See title page for details.

353006

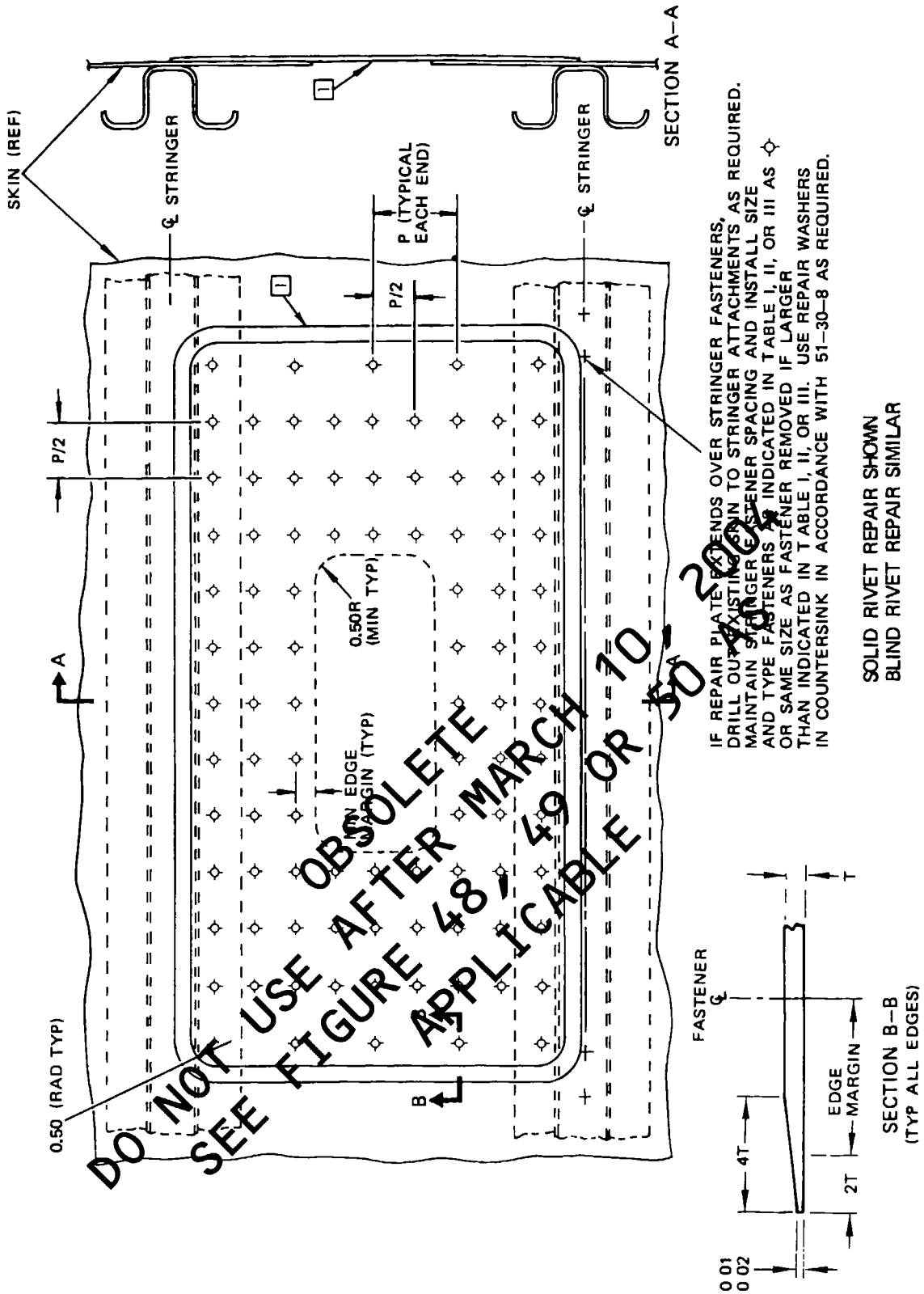

DO NOT USE AFTER MARCH 10, 2004
OBSOLETE
SEE FIGURE 48, 49 OR 50
APPLICABLE

Fuselage Skin – External Repair Between Stringers
Figure 1 (Sheet 4)

BOEING PROPRIETARY – Copyright © – Unpublished Work – See title page for details.

APPLICABILITY

THIS REPAIR IS APPLICABLE AT ANY BODY STATION (PRESSURIZED OR NONPRESSURIZED AREA) WHERE BONDED TEAR STRAPS ARE NOT PRESENT AND WHERE CHEM MILLED SKIN IS NOT PRESENT

DUE TO AERODYNAMIC REASONS, A PROTRUDING HEAD FASTENER REPAIR IS NOT APPLICABLE IN REGIONS OF STATIC PRESSURE PORTS. THIS REGION IS DEFINED IN SRM 51-70, FIG. 3. FOR REPAIRS IN REGIONS OF PITOT-STATIC PROBES AND ANGLE OF AIRFLOW SENSORS, REFER TO SRM 51-70, FIG. 5 AND 8.

REPAIR INSTRUCTIONS

1. If an external repair has previously been made, drill out fasteners and remove external plate and all sealant material and then complete applicable steps 2 through 13.
2. Trim out the damaged skin to form a rectangular opening parallel to the adjacent stringer.
3. Return all indented or projecting skin to contour.
4. Make part 2 to match skin cutout. Gap to be 0.05 minimum to 0.07 maximum.
5. Cut out plate 1.
6. Assemble the repair parts and drill the fastener holes. If an external plate is being replaced, drill fastener holes in part 1 to match existing holes in the skin.
7. Remove the repair parts.
8. Break sharp edges of original and repair parts 0.010 R to 0.020 R.
9. Remove all nicks, scratches, burrs, sharp edges and corners from original and repair parts.
10. Apply a protective alodine coating to the repair parts and the cut edges of the original parts per 51-10-2.
11. Apply one coat of BMS 10-79, Type II primer to repair parts and the cut edges of the original parts per 51-21 of the Maintenance Manual.
12. Install the repair parts making a faying surface seal per 51-20-4 with BMS 5-95 sealant. Fill gap around Part 2 with BMS 5-95 sealant or BMS 5-79 sealant.
13. Restore original finish per 51-21 of the Maintenance Manual.

NOTES

- THIS IS A CATEGORY A REPAIR. THE INSPECTIONS GIVEN IN THE BASELINE ZONAL INSPECTION (BZI) ARE SUFFICIENT TO MAINTAIN THE DAMAGE TOLERANCE OF THE INITIAL STRUCTURE WITH THIS REPAIR INSTALLED. REFER TO 51-00-6 FOR REPAIR CATEGORIES, BZI DEFINITION AND REPAIR ASSESSMENT INFORMATION.
- THIS REPAIR WILL HAVE AN EFFECT ON THE STRUCTURAL SIGNIFICANT ITEM (SSI):
  - NUMBER F-39, IF EXTENDED ACROSS A STRINGER AND INSTALLED IN THE CROWN AREA; BUT, THE INSPECTION ALTERNATIVES FOR F-39A THROUGH F-39H ARE STILL APPLICABLE
  - NUMBER F-41 WHEN INSTALLED UNDER THE WING-TO-BODY AND LOWER LOBE FAIRINGS, BUT THE INSPECTION ALTERNATIVES ARE STILL APPLICABLE.

  THEREFORE, NO NEW INSPECTION ALTERNATIVES ARE NECESSARY FOR THIS REPAIR. DO THE INSPECTIONS FOR F-39 AND F-41, IF NECESSARY, AT THE SUBSEQUENT SUPPLEMENTAL STRUCTURAL INSPECTION DOCUMENT (SSID) INSPECTION ON THIS AIRPLANE. REFER TO SRM 51-00-4, FIGURE 5 FOR THE APPLICABLE SSI INFORMATION.
- REFER TO THE FOLLOWING WHEN USING THIS REPAIR:
  - SRM 51-10-1 FOR INVESTIGATION AND CLEANUP OF DAMAGE
  - SRM 51-10-2 FOR PROTECTIVE TREATMENT OF METAL
  - SRM 51-20-4 FOR SEALING OF REPAIRS
  - SRM 51-30 FOR FASTENER CODE, REMOVAL, INSTALLATION, HOLE SIZES AND EDGE MARGINS
  - SRM 51-21 FOR INTERIOR AND EXTERIOR FINISHES
  - AMM 52-31 FOR SEALS AND SEALING
- MAKE REPAIR PARTS PER TABLE I

[A] SAME MATERIAL AS ORIGINAL SKIN AND ONE GAGE GREATER THAN ORIGINAL SKIN PLUS DOUBLER (IF ANY) COMBINATION.

[B] SAME MATERIAL AS ORIGINAL SKIN. SAME GAGE AS ORIGINAL SKIN OR SKIN PLUS DOUBLER COMBINATION

[C] WHERE AN EXTERNAL REPAIR PLATE HAS BEEN INSTALLED WITH BLIND RIVETS, USE THE SOLID RIVETS SPECIFIED IN TABLE II, EXCEPT THAT THE SOLID RIVETS MUST BE 1/32 LARGER IN DIAMETER THAN THE NOMINAL SIZE OF THE BLIND RIVETS.

FASTENER SYMBOLS

-⊕- REPAIR FASTENER LOCATION

Fuselage Skin - Flush Repair for Damage Between Stringers
Figure 2 (Sheet 1)

DO NOT USE OBSOLETE SEE FIGURE 48, 49 OR 50 AS APPLICABLE AFTER MARCH 10, 2004

BOEING PROPRIETARY - Copyright © - Unpublished Work - See title page for details.

353010

REPAIR MATERIAL			
PART		QTY	MATERIAL
1	PLATE	1	A
2	FILLER	1	B

TABLE I

ORIGINAL SKIN GAGE	FASTENER C		FASTENER SPACING ±0.06
	PREFERRED	OPTIONAL	
0.032	BACR15BB5D		0.78
0.036	BACR15BB5D		0.78
0.040	BACR15BB5D	BACR15BB6D	0.78 0.94
0.045	BACR15BB5D	BACR15BB6D	0.78 0.94
0.050	BACR15BB6D	BACR15CE5D	0.94 0.78
0.056	BACR15BB6D		0.94
0.063	BACR15CE6D	BACR15BB6D	0.94 0.94
0.071	BACR15BB8D	BACR15CE6D	1.25 0.94

TABLE II

DO NOT USE AFTER MARCH 10, 2004
OBSOLETE
SEE FIGURE 48, 49 OR 50 AS
APPLICABLE

Fuselage Skin - Flush Repair for Damage Between Stringers
Figure 2 (Sheet 2)

BOEING PROPRIETARY - Copyright © - Unpublished Work - See title page for details.

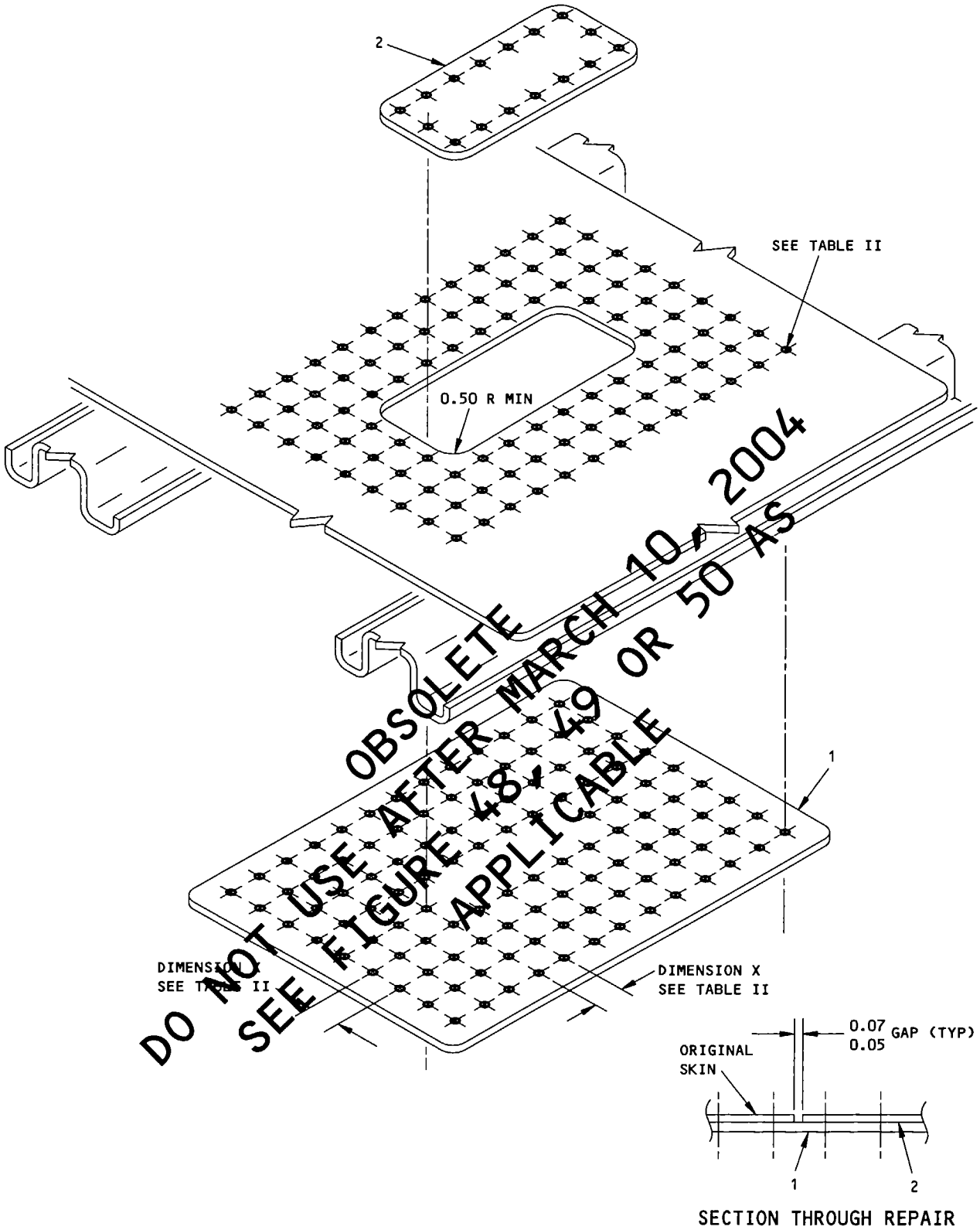

OBSOLETE AFTER MARCH 10, 2004
DO NOT USE
SEE FIGURE 48, 49 OR 50 AS
APPLICABLE

Fuselage Skin - Flush Repair for Damage Between Stringers
Figure 2 (Sheet 3)

353016

BOEING PROPRIETARY - Copyright © - Unpublished Work - See title page for details.

APPLICABILITY

THIS REPAIR IS APPLICABLE AT ANY BODY STATION (PRESSURIZED OR NONPRESSURIZED AREA) WHERE BONDED WAFFLE DOUBLERS ARE PRESENT AND WHERE CHEM MILLED SKIN IS NOT PRESENT. SEE FIGURE 19 FOR AN ALTERNATE REPAIR FOR 0.036 SKIN.

DUE TO AERODYNAMIC REASONS, A PROTRUDING HEAD FASTENER REPAIR IS NOT APPLICABLE IN REGIONS OF STATIC PRESSURE PORTS. THIS REGION IS DEFINED IN SRM 51-70, FIG. 3. FOR REPAIRS IN REGIONS OF PITOT-STATIC PROBES AND ANGLE OF AIRFLOW SENSORS, REFER TO SRM 51-70, FIG. 5 AND 8.

REPAIR INSTRUCTIONS

1. If an external repair has previously been made, drill out fasteners and remove external plate and all sealant material and then complete applicable steps 2 through 13.
2. Trim out the damaged skin to form a rectangular opening parallel to the adjacent stringer.
3. Return all indented or projecting skin to contour.
4. Make part 2 to match skin cutout. Gap to be 0.07 maximum and 0.05 minimum.
5. Cut out plate 1.
6. Assemble the repair parts and drill the fastener holes. If an external plate is being replaced, drill fastener holes in part 1 to match existing holes in the skin. Otherwise drill fastener holes according to the fastener pattern shown in this figure.
7. Remove the repair parts.
8. Break sharp edges of original and repair parts 0.010 R to 0.020 R.
9. Remove all nicks, scratches, burrs, sharp edges and corners from original and repair parts.
10. Apply a protective alodine coating to the repair parts and the cut edges of the original parts per 51-10-2.
11. Apply one coat of BMS 10-79, Type II primer to repair parts and the cut edges of the original parts per 51-21 of the Maintenance Manual.
12. Install the repair parts making a faying surface seal per 51-20-4 with BMS 5-95 sealant. Fill gap around Part 2 with BMS 5-95 sealant or BMS 5-79 smoother.
13. Restore original finish per 51-21 of the Maintenance Manual.

NOTES

- THIS IS A CATEGORY A REPAIR. THE INSPECTIONS GIVEN IN THE BASELINE ZONAL INSPECTION (BZI) ARE SUFFICIENT TO MAINTAIN THE DAMAGE TOLERANCE OF THE INITIAL STRUCTURE WITH THIS REPAIR INSTALLED. REFER TO 51-00-6 FOR REPAIR CATEGORIES, BZI DEFINITION AND REPAIR ASSESSMENT INFORMATION.
- THIS REPAIR WILL NOT HAVE AN EFFECT ON THE STRUCTURAL SIGNIFICANT ITEMS (SSI) GIVEN IN SRM 51-00-4, FIGURE 3.
- REFER TO THE FOLLOWING WHEN USING THIS REPAIR:
  - SRM 51-10-1 FOR INVESTIGATION AND CLEANUP OF DAMAGE
  - SRM 51-10-2 FOR PROTECTIVE TREATMENT OF METAL
  - SRM 51-20-4 FOR SEALING OF REPAIRS
  - SRM 51-30 FOR FASTENER CODE, REMOVAL, INSTALLATION, HOLE SIZES AND EDGE MARGINS
  - AMM 51-21 FOR INTERIOR AND EXTERIOR FINISHES
  - AMM 51-31 FOR SEALS AND SEALING
- MAKE REPAIR PARTS PER TABLES II,III, AND IV AS APPLICABLE

FASTENER SYMBOLS

✦ REPAIR FASTENER LOCATION. SEE TABLE I

REPAIR FASTENER		
ORIGINAL SKIN GAGE	FASTENER	SPACING
0.032,0.036, 0.040,0.045, 0.050	BACR15BB5D	0.75 0.80
0.056,0.063	BACR15CE5D	0.75 0.80

TABLE I

Fuselage Skin Flush Repair Between Stringers and Adjacent to Waffle Doubler
Figure 3 (Sheet 1)

REPAIR MATERIAL			
PART		0.032 SKIN	
		QTY	MATERIAL
1	PLATE	1	0.036 CLAD 2024-T3
2	FILLER	1	0.032 CLAD 2024-T3

TABLE II

REPAIR MATERIAL							
PART		0.036 SKIN		0.040 SKIN		0.045 SKIN	
		QTY	MATERIAL	QTY	MATERIAL	QTY	MATERIAL
1	PLATE	1	0.040 CLAD 2024-T3	1	0.045 CLAD 2024-T3	1	0.050 CLAD 2024-T3
2	FILLER	1	0.036 CLAD 2024-T3	1	0.040 CLAD 2024-T3	1	0.045 CLAD 2024-T3

TABLE III

REPAIR MATERIAL							
PART		0.050 SKIN		0.056 SKIN		0.063 SKIN	
		QTY	MATERIAL	QTY	MATERIAL	QTY	MATERIAL
1	PLATE	1	0.056 CLAD 2024-T3	1	0.063 CLAD 2024-T3	1	0.071 CLAD 2024-T3
2	FILLER	1	0.050 CLAD 2024-T3	1	0.056 CLAD 2024-T3	1	0.063 CLAD 2024-T3

TABLE IV

Fuselage Skin Flush Repair Between Stringers and Adjacent to Waffle Doubler
Figure 3 (Sheet 2)

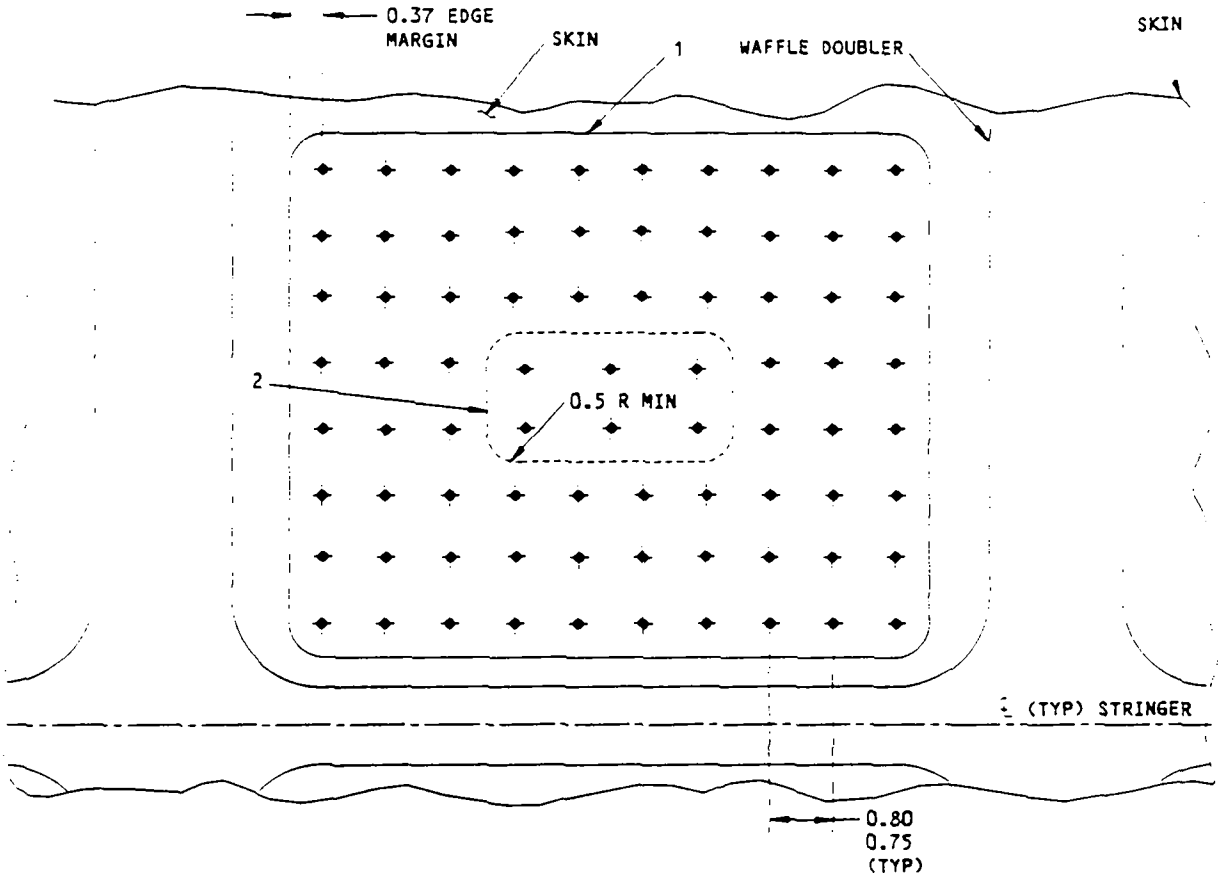

VIEW ON INSIDE SURFACE OF SKIN

Fuselage Skin Flush Repair Between Stringers and Adjacent to Waffle Doubler
Figure 3 (Sheet 3)

REPAIR INSTRUCTIONS

1. Round out and deburr the damaged hole to 1-inch diameter maximum. The center of the repair hole should not be less than four (4) times the hole diameter from the edge of any cutout.

2. Install parts [1] and [2]. It is not desirable to have any fastener in part [1] area, and the skin surface within the part [1] area should be of constant thickness.

3. The repair should be dismantled and the structure examined every 200 to 300 hours. If it is desired to continue beyond the 200- to 300-hour examination, the inner doubler may be bonded to the skin as optional in order to facilitate inspections [A]. This repair must be replaced at the next major base check (after 2500 hours maximum), in fuselage pressurized skin areas other than doors, by a repair as shown in Fig. 3 and 5.

4. Replace original finish according to 51-21 of 737 Maintenance Manual.

NOTE

- THIS REPAIR IN THE CROWN REGION IS LIMITED TO 1000 HOURS MAXIMUM
- REPAIR APPLICABLE TO SMALL HOLES IN PRESSURIZED AREAS WITH TOTAL SKIN THICKNESS OF .125 MAXIMUM
- REF 51-10-2 FOR PROTECTIVE TREATMENT OF METALS
- REF 51-30 FOR FASTENER CODE, REMOVAL AND INSTALLATION
- FOR AERODYNAMIC SMOOTHNESS REF 51-70

[A] THIS REPAIR HAS FAA (DER) APPROVAL CONTINGENT OF ACCOMPLISHMENT OF THE INSPECTIONS AT THE INTERVALS CONTAINED HEREIN

REPAIR MATERIAL			
PART		QTY	MATERIAL
[1]	DOUBLER	2	2024-T4 OR BETTER TWICE TOTAL SKIN THICKNESS
[2]	FILLER	1	2024-T4 SAME GAGE AS SKIN

Fuselage Skin - Small External Repair
Figure 4 (Sheet 1)

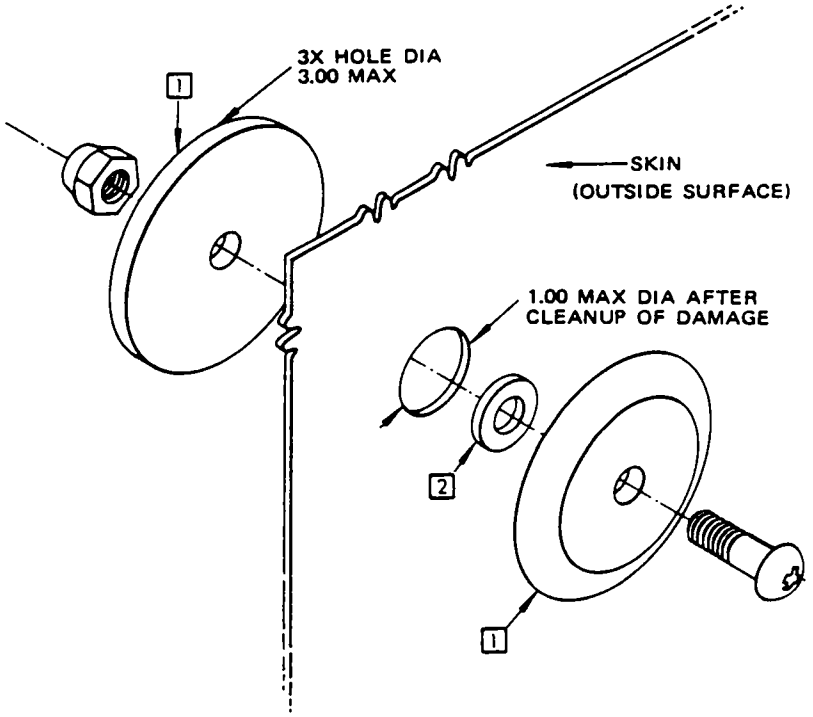

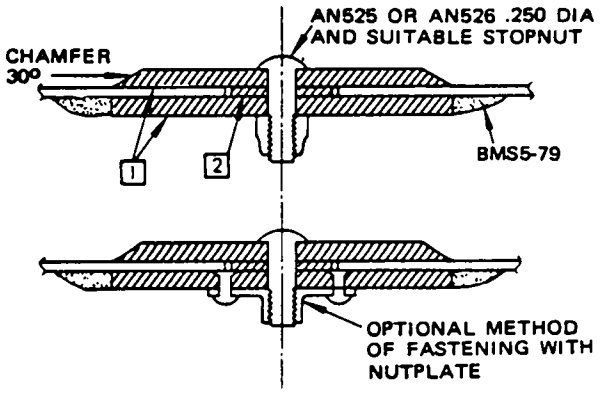

SECTION THROUGH REPAIR

Fuselage Skin - Small External Repair
Figure 4 (Sheet 2)

APPLICABILITY

THIS REPAIR IS APPLICABLE AT ANY BODY STATION (PRESSURIZED OR NONPRESSURIZED AREA) WHERE CHEM MILLED SKIN IS NOT PRESENT. SEE FIGURE 18 FOR AN ALTERNATE REPAIR.

DUE TO AERODYNAMIC REASONS, A PROTRUDING HEAD FASTENER REPAIR IS NOT APPLICABLE IN REGIONS OF STATIC PRESSURE PORTS. THIS REGION IS DEFINED IN SRM 51-70, FIG. 3. FOR REPAIRS IN REGIONS OF PITOT-STATIC PROBES AND ANGLE OF AIRFLOW SENSORS, REFER TO SRM 51-70, FIG. 5 AND 8.

REPAIR INSTRUCTIONS

1. If an external repair has previously been made, drill out fasteners and remove external plate and all sealant material and then complete applicable steps 2 through 13.
2. Round out and deburr the damaged hole to 1-inch diameter maximum. The center of the repair hole should be at least four (4) times the hole diameter from the edge of any cutout.
3. Return all indented or projecting skin to contour.
4. Make part 1 to match skin cutout. Gap to be 0.07 maximum and 0.05 minimum.
5. Cut out plate 2.
6. Assemble the repair parts and drill the fastener holes. If an external plate is being replaced, drill fastener holes in part 2 to match existing holes in the skin. Otherwise, drill fastener holes according to the fastener pattern shown in this figure.
7. Remove the repair parts.
8. Break sharp edges of original and repair parts 0.010 R to 0.020 R.
9. Remove all nicks, scratches, burrs, sharp edges and corners from original and repair parts.
10. Apply a protective alodine coating to the repair parts and the cut edges of the original parts per 51-10-2.
11. Apply one coat of BMS 10-79, Type II primer to repair parts and the cut edges of the original parts per 51-21 of the Maintenance Manual.
12. Install the repair parts making a faying surface seal per 51-20-4 with BMS 5-95 sealant. Fill gap around Part 2 with BMS 5-95 sealant or BMS 5-79 smoother.
13. Restore original finish per 51-21 of the Maintenance Manual.

NOTES

- THIS IS A CATEGORY A REPAIR. THE INSPECTIONS GIVEN IN THE BASELINE ZONAL INSPECTION (BZI) ARE SUFFICIENT TO MAINTAIN THE DAMAGE TOLERANCE OF THE INITIAL STRUCTURE WITH THIS REPAIR INSTALLED. REFER TO 51-00-6 FOR REPAIR CATEGORIES, BZI DEFINITION AND REPAIR ASSESSMENT INFORMATION.
- THIS REPAIR WILL NOT HAVE AN EFFECT ON THE STRUCTURAL SIGNIFICANT ITEMS (SSI) GIVEN IN SRM 51-00-4, FIGURE 3.
- REFER TO THE FOLLOWING WHEN USING THIS REPAIR:
  - SRM 51-10-1 FOR INVESTIGATION AND CLEANUP OF DAMAGE
  - SRM 51-10-2 FOR PROTECTIVE TREATMENT OF METAL
  - SRM 51-20-4 FOR SEALING OF REPAIRS
  - SRM 51-30 FOR FASTENER CODE, REMOVAL, INSTALLATION, HOLE SIZES AND EDGE MARGINS
  - SRM 51-70 FOR AERODYNAMIC SMOOTHNESS REQUIREMENTS
  - AMM 51-21 FOR INTERIOR AND EXTERIOR FINISHES
  - AMM 51-31 FOR SEALS AND SEALING

[A] MAKE REPAIR PARTS FROM CLAD 2024-T3 ALUMINUM

[B] MAKE CENTRAL FASTENER SAME SIZE AND TYPE AS REPAIR FASTENERS IN INNER AND OUTER ROWS

FASTENER SYMBOLS

REPAIR FASTENER LOCATION. SEE TABLE I FOR QUANTITY AND DIAMETER OF REPAIR FASTENERS

Fuselage Skin Small Flush Repair
Figure 5 (Sheet 1)

FASTENER	SKIN GAGE	REPAIR PART GAGES [A]		A INCHES	B INCHES	C INCHES	INNER RIVET CIRCLE		OUTER RIVET CIRCLE	
		PART 1	PART 2				QTY	DIA	QTY	DIA
BACR15BB5D	0.032	0.032	0.036	3.80	1.70	3.10	7	5/32	14	5/32
	0.036	0.036	0.040	3.80	1.70	3.10	7	5/32	14	5/32
	0.040	0.040	0.045	3.80	1.70	3.10	7	5/32	14	5/32
	0.045	0.045	0.050	3.80	1.70	3.10	7	5/32	14	5/32
	0.050	0.050	0.056	4.30	1.80	3.50	8	5/32	15	5/32
BACR15BB6D	0.056	0.056	0.063	4.30	1.80	3.50	6	3/16	13	3/16
BACR15CE6D	0.063	0.063	0.071	4.30	1.80	3.50	6	3/16	13	3/16
	0.071	0.071	0.080	5.25	2.00	4.25	7	3/16	14	3/16

TABLE I

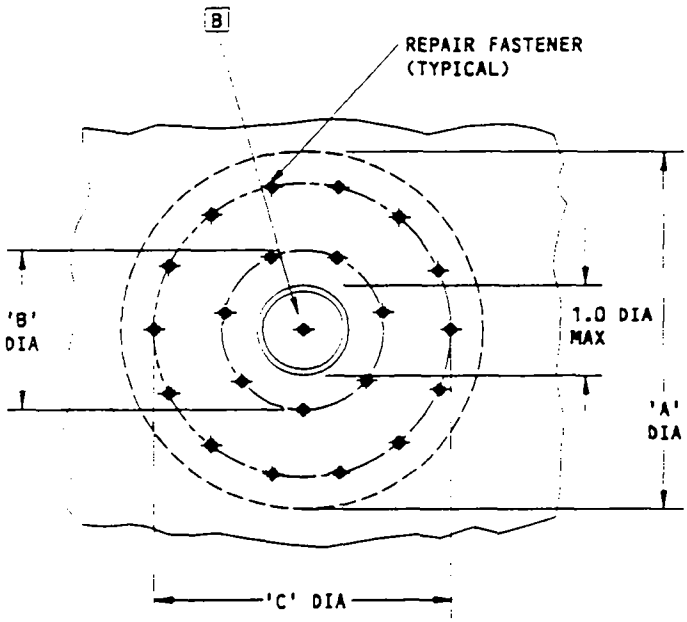

EXTERIOR VIEW

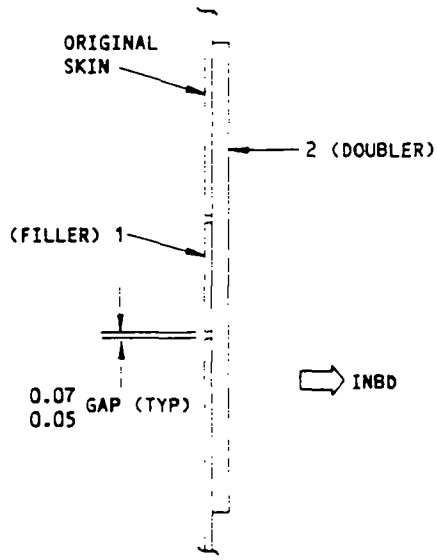

SECTION THROUGH REPAIR

Fuselage Skin Small Flush Repair
Figure 5 (Sheet 2)

APPLICABILITY
THIS REPAIR IS NOT APPLICABLE TO SECTIONS 41, 43 AND 46. SEE FIGURE 48 OR FIGURE 49.

REPAIR INSTRUCTIONS

External repair as shown allows either solid rivet or blind rivet repair. Refer to applicable repair instructions.

SOLID RIVET REPAIR

1. Trim the damaged skin across the stiffener to a rectangular shape and parallel to the stringer. If the stringer is damaged, repair as shown in SRM 53-10-3.
2. Drill out existing fasteners in the skin to stringer attachment as required.
3. Return all indented or projecting skin to contour. Remove all burrs, nicks, scratches, sharp edges or corners from the damaged area.
4. Make the repair parts and drill the appropriate fastener holes.
5. Alodize the cut edges of new and existing parts.
6. Install repair parts with the fasteners specified in Table I, making faying surface seals between all parts in accordance with SRM 53-30-4. A bead of sealant should be apparent all around cutout in skin after installation. Where there is sufficient sealant squeezed out it may be formed into a fillet, otherwise an additional fillet seal should be applied.
7. Restore the finish according to AMM 51-20.

BLIND RIVET REPAIR

NOTE: Refer to general notes for fastener seating and inspection requirements prior to making blind rivet repair.

1. Trim the damaged skin across the stiffener to a rectangular shape and parallel to the stringer. If the stringer is damaged, repair as shown in SRM 53-10-3.
2. Drill out existing fasteners in the skin to stringer attachment as required.
3. Return all indented or projecting skin to contour. Remove all burrs, nicks, scratches, sharp edges or corners from the damaged area.
4. Make the repair parts and drill the appropriate fastener holes.
5. Alodize the cut edges of new and existing parts.
6. Prime the alodized edges of existing parts and all interior surfaces of new parts.
7. Install repair parts with the fasteners specified in Table II, making faying surface seals between all parts in accordance with SRM 53-30-4.

   NOTE: Special care should be taken when applying sealant to faying surfaces to ensure that a bead of sealant will be squeezed out all around the skin cutout and filler upon repair plate installation.
8. Restore the finish according to AMM 51-21.

OBSOLETE
DO NOT USE AFTER MARCH 10, 2004
SEE FIGURE 48, 49 OR 50 AS
APPLICABLE

Fuselage Skin - External Repair at Stringer
Figure 6 (Sheet 1)

BOEING PROPRIETARY - Copyright © - Unpublished Work - See title page for details.

NOTES

- BLIND RIVET REPAIRS SHOULD NOT BE USED WHERE DOUBLERS, TRIPLERS AND NONTYPICAL STRUCTURE EXIST UNLESS IT CAN BE DEFINITELY ESTABLISHED THAT THE BLIND RIVETS WILL BE PROPERLY SEATED ON THE INTERNAL STRUCTURE AND THAT ADEQUATE RIVET SPACING AND EDGE MARGINS ARE MAINTAINED.
- BLIND RIVET REPAIRS MUST BE EXAMINED 3,000 FLIGHT CYCLES AFTER INSTALLATION, AND EACH 2,500 FLIGHT CYCLES AFTER THAT. IT IS RECOMMENDED THAT BLIND RIVET REPAIRS BE REPLACED WITH SOLID FASTENER REPAIRS BY THE SUBSEQUENT OVERHAUL. BLIND RIVET REPAIRS MUST BE REPLACED WITH SOLID FASTENER REPAIRS 10,000 FLIGHT CYCLES OR LESS AFTER THE INITIAL INSTALLATION. [F]
- WHEN BLIND RIVETS ARE REPLACED WITH SOLID RIVETS, USE THE SOLID RIVETS SPECIFIED IN TABLE I EXCEPT THAT THE SOLID RIVETS MUST BE A MINIMUM OF 1/32 LARGER IN DIAMETER THAN THE NOMINAL SIZE OF THE BLIND RIVETS BEING REPLACED.
- REFER TO THE FOLLOWING WHEN MAKING THE REPAIR:

  51-10-2 FOR PROTECTIVE TREATMENT OF METAL

  51-30 FOR FASTENER CODE, REMOVAL AND INSTALLATION, HOLE SIZE AND EDGE MARGINS AND COUNTERSINKING

  51-70 FOR LIMITATIONS FOR EXTERNAL REPAIRS AND AERODYNAMIC SMOOTHNESS REQUIREMENTS.

[A] SAME MATERIAL AND HEAT-TREAT AS ORIGINAL SKIN AND TWO GAGES GREATER, MIN GAGE 0.050

[B] SAME MATERIAL, HEAT TREAT AS ORIGINAL SKIN. SAME GAGE AS SKIN OR SKIN AND DOUBLER

[C] REPAIRS MAY BE MADE WITH PROTRUDING HEAD FASTENERS AT THE OPERATOR'S OPTION. REFER TO 51-70 FOR AERODYNAMIC SMOOTHNESS REQUIREMENTS

[D] WHEN USING MS20426 FASTENERS THE COUNTER-SINK DEPTH MUST NOT EXCEED THAT WHICH IS GIVEN FOR BACR15CE FASTENERS

[E] INSTALL IN HOLES SWABBED WITH BMS 5-95 SEALANT

[F] THIS REPAIR HAS FAA (DER) APPROVAL CONTIN-GENT ON ACCOMPLISHMENT OF THE INSPECTIONS AT THE INTERVALS CONTAINED HEREIN

SYMBOLS

+ EXISTING FASTENER LOCATIONS. REFER TO NOTES ON FACE OF DRAWING

⊕ REPAIR FASTENER LOCATIONS. SEE TABLE I OR TABLE II AS APPLICABLE

REPAIR MATERIAL			
PART		QTY	MATERIAL
[1]	PLATE		[A]
[2]	FILLER	1	[B]

OBSOLETE AFTER MARCH 10, 2004
DO NOT USE FIGURE 48, 49 OR 50 AS
SEE APPLICABLE

Fuselage Skin - External Repair at Stringer
Figure 6 (Sheet 2)

BOEING PROPRIETARY - Copyright © - Unpublished Work - See title page for details.

ORIGINAL SKIN GAGE	PREFERRED FASTENER	OPTIONAL FASTENER ⊕ D	SPACING P	EDGE MARGIN
0.036–0.045	BACR15CE5D	MS20426D5	1.56–1.61	0.39
0.050–0.063	BACR15CE6D	MS20426D6	1.87–1.94	0.47
0.071	BACR15CE8D	MS20426D8	2.38–2.56	0.63
		MS20470D C		

FOR SOLID RIVET REPAIR ONLY

TABLE I

ORIGINAL SKIN GAGE	PREFERRED FASTENER ⊕ E	NUMBER OF ROWS		SPACING P	EDGE MARGIN
		LONGITUDINAL	CIRCUMFERENTIAL		
0.036–0.045	NAS1738E4	3	3½	1.56–1.61	0.32
0.050	NAS1738E5	3	3½	1.87–1.94	0.32
0.063	NAS1738E5	4	4½	1.87–1.94	0.36
0.071	NAS1738E6	4	4½	2.38–2.56	0.36

FOR BLIND RIVET REPAIR ONLY

TABLE II

Fuselage Skin - External Repair at Stringer
Figure 6 (Sheet 3)

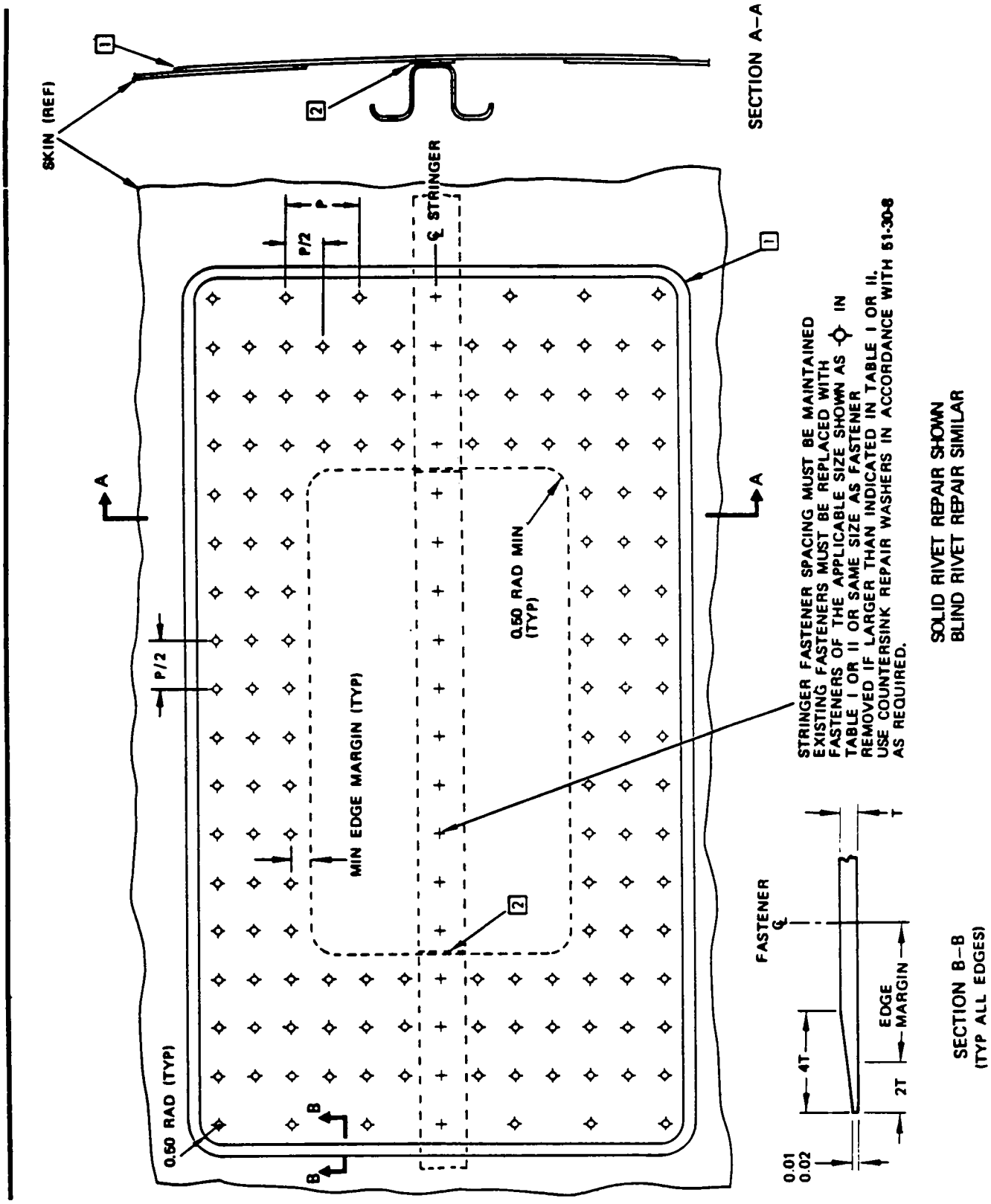

Fuselage Skin - External Repair at Stringer
Figure 6 (Sheet 4)

APPLICABILITY

THIS REPAIR IS APPLICABLE AT ANY BODY STATION (PRESSURIZED OR NONPRESSURIZED AREA) WHERE BONDED WAFFLE DOUBLERS ARE PRESENT AND WHERE CHEM MILLED SKIN IS NOT PRESENT.

DUE TO AERODYNAMIC REASONS, A PROTRUDING HEAD FASTENER REPAIR IS NOT APPLICABLE IN REGIONS OF STATIC PRESSURE PORTS. THIS REGION IS DEFINED IN SRM 51-70, FIG. 3. FOR REPAIRS IN REGIONS OF PITOT-STATIC PROBES AND ANGLE OF AIRFLOW SENSORS, REFER TO SRM 51-70, FIG. 5 AND 8.

REPAIR INSTRUCTIONS

1. If an external repair has previously been made, drill out fasteners and remove external plate and all sealant material and then complete applicable steps 2 through 17.
2. If an external repair has not previously been made, determine the extent of the repair and drill out the stringer rivets over this area.
3. Cut and remove the portion of stringer involved taking care not to damage the skin or doubler.
4. Cut out the damaged portion of skin and doubler to form a retangular opening parallel to the adjacent stringer.
5. Return all indented or projecting skin to contour.
6. Radius the corners of the waffle doubler taking care not to damage the skin. Corner radii are to be at edge of skin cutout.
7. Make part 3 to match skin cutout. Gap to be 0.07 maximum and 0.05 minimum.
8. Make the remaining repair parts for the skin repair.
9. Assemble repair parts and drill to suit existing and repair fasteners. If an external plate is being replaced, drill fastener holes in repair parts to match existing holes in the skin. Otherwise, drill fastener holes according to the fastener pattern shown in this figure.
10. Remove the repair parts.
11. Break sharp edges of original and repair parts 0.010 R to 0.020 R.
12. Remove all nicks, scratches, burrs, sharp edges and corners from original and repair parts.
13. Apply a protective alodine coating to the repair parts and the cut edges of the original parts per 51-10-2.
14. Apply one coat of BMS 10-79, Type II primer to repair parts and the cut edges of the original parts per 51-21 of the Maintenance Manual.
15. Assemble the repair parts in place making a faying surface seal per 51-20-4 with BMS 5-95 sealant. Install repair fasteners except for those required for the subsequent stringer repair. Fill gap around Part 3 with BMS 5-95 sealant or BMS 5-79 smoother.
16. Repair the stringer per the appropriate repair called out in the stringer repair index.
17. Restore original finish per 51-21 of the Maintenance Manual.

DO NOT USE AFTER JULY 10, 2003
OBSOLETE
SEE FIGURE 48 OR FIGURE 49

Fuselage Skin - Flush Repair for Damage at a Stringer and Waffle Doubler
Figure 7 (Sheet 1)

BOEING PROPRIETARY - Copyright © - Unpublished Work - See title page for details.

NOTES

- THIS IS A CATEGORY A REPAIR. THE INSPECTIONS GIVEN IN THE BASELINE ZONAL INSPECTION (BZI) ARE SUFFICIENT TO MAINTAIN THE DAMAGE TOLERANCE OF THE INITIAL STRUCTURE WITH THIS REPAIR INSTALLED. REFER TO 51-00-6 FOR REPAIR CATEGORIES, BZI DEFINITION AND REPAIR ASSESSMENT INFORMATION.
- THIS REPAIR WILL HAVE AN EFFECT ON THE STRUCTURAL SIGNIFICANT ITEM (SSI):
  - NUMBER F-39 WHEN INSTALLED IN THE CROWN AREA, BUT THE INSPECTION ALTERNATIVES FOR F-39A THROUGH F-39H ARE STILL APPLICABLE
  - NUMBER F-41 WHEN INSTALLED UNDER THE WING-TO-BODY AND LOWER LOBE FAIRINGS, BUT THE INSPECTION ALTERNATIVES ARE STILL APPLICABLE.

  THEREFORE, NO NEW INSPECTION ALTERNATIVES ARE NECESSARY FOR THIS REPAIR. DO THE INSPECTIONS FOR F-39 AND F-41, IF NECESSARY, AT THE SUBSEQUENT SUPPLEMENTAL STRUCTURAL INSPECTION DOCUMENT (SSID) INSPECTION ON THIS AIRPLANE. REFER TO SRM 51-00-4, FIGURE 3 FOR THE APPLICABLE SSI INFORMATION.
- REFER TO THE FOLLOWING WHEN USING THIS REPAIR:
  - SRM 51-00-6 FOR REPAIR CATEGORIES, DEFINITIONS AND REPAIR ASSESSMENT PROGRAM INFORMATION
  - SRM 51-10-1 FOR INVESTIGATION AND CLEANUP OF DAMAGE
  - SRM 51-10-2 FOR PROTECTIVE TREATMENT OF METAL
  - SRM 51-20-4 FOR SEALING OF REPAIRS
  - SRM 51-30 FOR FASTENER CODE, REMOVAL, INSTALLATION, HOLE SIZES AND EDGE MARGINS
  - SRM 51-70 FOR AERODYNAMIC SMOOTHNESS REQUIREMENTS
  - AMM 51-21 FOR INTERIOR AND EXTERIOR FINISHES
  - AMM 51-31 FOR SEALS AND SEALING
- THIS REPAIR DOES NOT APPLY TO DAMAGE AT SKIN SPLICES OR IN A WINDOW BELT AREA (BETWEEN STRINGERS S-10 AND S-14)
- MAKE REPAIR PARTS PER TABLES II,III AND IV AS APPLICABLE

FASTENER SYMBOLS

┼ ORIGINAL FASTENER LOCATION. DURING SUBSEQUENT STRINGER REPAIR, INSTALL FASTENERS CALLED OUT IN THE STRINGER REPAIR FIGURE. REFER TO 53-10-3 FOR STRINGER REPAIRS

✦ REPAIR FASTENER LOCATION. SEE TABLE I

REPAIR FASTENER		
ORIGINAL SKIN GAGE	FASTENER	SPACING (DIM X)
0.032,0.036, 0.040,0.045, 0.050	BACR15BB5D	0.75 0.80
0.056,0.063	BACR15CE5D	0.75 0.80

TABLE I

REPAIR MATERIAL			
		0.032 SKIN 0.036 DOUBLER	
PART		QTY	MATERIAL
1	DOUBLER PLATE	1	0.036 CLAD 2024-T3
2	FILLER	1	0.036 CLAD 2024-T3
3	FILLER	1	0.032 CLAD 2024-T3
4	SHIM	2	CLAD 2024-T3

TABLE II

OBSOLETE JULY 10 2003
DO NOT USE AFTER FIGURE 49
SEE FIGURE 48 OR

Fuselage Skin - Flush Repair for Damage at a Stringer and Waffle Doubler
Figure 7 (Sheet 2)

BOEING PROPRIETARY - Copyright © - Unpublished Work - See title page for details.

REPAIR MATERIAL							
		0.036 SKIN 0.036 DOUBLER		0.040 SKIN 0.036 DOUBLER		0.045 SKIN 0.036 DOUBLER	
PART		QTY	MATERIAL	QTY	MATERIAL	QTY	MATERIAL
1	DOUBLER PLATE	1	0.040 CLAD 2024-T3	1	0.045 CLAD 2024-T3	1	0.050 CLAD 2024-T3
2	FILLER	1	0.036 CLAD 2024-T3	1	0.036 CLAD 2024-T3	1	0.036 CLAD 2024-T3
3	FILLER	1	0.036 CLAD 2024-T3	1	0.040 CLAD 2024-T3	1	0.045 CLAD 2024-T3
4	SHIM	2	CLAD 2024-T3	2	CLAD 2024-T3	2	CLAD 2024-T3

TABLE III

REPAIR MATERIAL							
		0.050 SKIN 0.036 DOUBLER		0.056 SKIN 0.036 DOUBLER		0.063 SKIN 0.056 DOUBLER	
PART		QTY	MATERIAL	QTY	MATERIAL	QTY	MATERIAL
1	DOUBLER PLATE	1	0.056 CLAD 2024-T3	1	0.063 CLAD 2024-T3	1	0.071 CLAD 2024-T3
2	FILLER	1	0.036 CLAD 2024-T3	1	0.036 CLAD 2024-T3	1	0.056 CLAD 2024-T3
3	FILLER	1	0.050 CLAD 2024-T3	1	0.056 CLAD 2024-T3	1	0.063 CLAD 2024-T3
4	SHIM	2	CLAD 2024-T3	2	CLAD 2024-T3	2	CLAD 2024-T3

TABLE IV

DO NOT USE AFTER JULY 10, 2003
OBSOLETE
SEE FIGURE 48 OR FIGURE 49

Fuselage Skin - Flush Repair for Damage at a Stringer and Waffle Doubler
Figure 7 (Sheet 3)

BOEING PROPRIETARY - Copyright © - Unpublished Work - See title page for details.

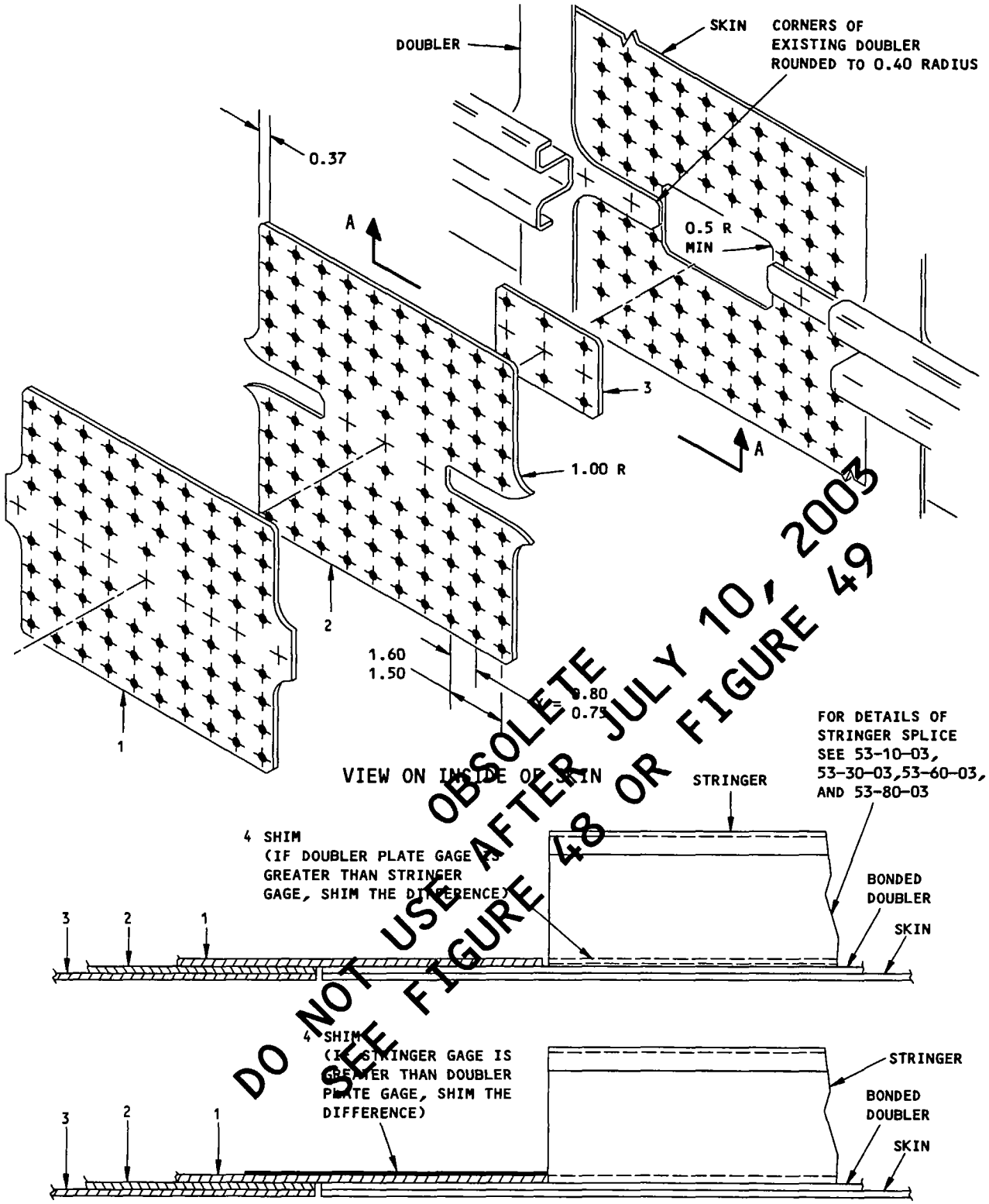

DO NOT USE AFTER JULY 10, 2003
OBSOLETE
SEE FIGURE 48 OR FIGURE 49

SECTION A-A

Fuselage Skin - Flush Repair for Damage at a Stringer and Waffle Doubler
Figure 7 (Sheet 4)

BOEING PROPRIETARY - Copyright © - Unpublished Work - See title page for details.

APPLICABILITY

THIS REPAIR APPLIES TO THE SKIN AND BONDED CHEM-MILLED DOUBLERS IN THE AREA BETWEEN BS 259.50 AND BS 1016.

THIS REPAIR DOES NOT APPLY TO DAMAGE AT SKIN SPLICES OR IN THE WINDOW BELT AREA (BETWEEN S-10 AND S-14).

DO NOT USE PROTRUDING HEAD FASTENERS IN THE AREA AROUND PRESSURE PORTS, PITOT-STATIC PROBES OR ANGLE OF AIRFLOW SENSORS. THESE AREAS HAVE IMPORTANT AERODYNAMIC SMOOTHNESS LIMITS. THESE AREAS ARE GIVEN IN SRM 51-70, FIGURE 5 AND 8.

TELL BOEING IF THERE IS DELAMINATION BETWEEN THE SKIN AND THE BONDED CHEM-MILLED DOUBLER.

REPAIR INSTRUCTIONS

1. Remove the fasteners from the repair area.
2. Cut out the damaged skin and bonded chem-milled doubler. Take care not to damage the adjacent skin and bonded chem-milled doubler. Refer to Detail I.
3. Make the repair parts. Refer to Table I.
4. Assemble the repair parts and drill the fastener holes.
5. Disassemble the repair parts.
6. Remove the nicks, scratches, gouges, burrs, and sharp edges from the skin, doubler and repair parts.
7. Apply a chemical conversion coating to the repair parts and to the bare surfaces of the skin and bonded chem-milled doubler. Refer to SRM 51-10-2.
8. Apply one layer of BMS 10-79, Type II, primer to the repair parts and to the bare surfaces of the skin and bonded chem-milled doubler. Refer to AMM 51-21.
9. Install the repair parts with BMS 5-95 sealant between the mating surfaces. Apply a fillet seal of BMS 5-95 sealant along the edges of the repair parts. Refer to SRM 51-20-4.
10. Install the fasteners.
11. Apply the finish to the repair area. Refer to AMM 51-21.

DO NOT USE AFTER JULY 10, 2003
OBSOLETE
SEE FIGURE 48 OR FIGURE 49

NOTES

- THIS IS A CATEGORY A REPAIR. THE INSPECTIONS GIVEN IN THE BASELINE ZONAL INSPECTION (BZI) ARE SUFFICIENT TO MAINTAIN THE DAMAGE TOLERANCE OF THE INITIAL STRUCTURE WITH THIS REPAIR INSTALLED. REFER TO 51-00-06 FOR REPAIR CATEGORIES, BZI DEFINITION AND REPAIR ASSESSMENT INFORMATION.
- THIS REPAIR WILL HAVE AN EFFECT ON THE STRUCTURAL SIGNIFICANT ITEM (SSI):
  - NUMBER F-39, IF EXTENDED ACROSS A STRINGER AND INSTALLED IN THE CROWN AREA; BUT, THE INSPECTION ALTERNATIVES FOR F-39A THROUGH F-39H ARE STILL APPLICABLE
  - NUMBER F-41 WHEN INSTALLED UNDER THE WING-TO-BODY AND LOWER LOBE FAIRINGS, BUT THE INSPECTION ALTERNATIVES ARE STILL APPLICABLE.

  THEREFORE, NO NEW INSPECTION ALTERNATIVES ARE NECESSARY FOR THIS REPAIR. DO THE INSPECTIONS FOR F-39 AND F-41, IF NECESSARY, AT THE SUBSEQUENT SUPPLEMENTAL STRUCTURAL INSPECTION DOCUMENT (SSID) INSPECTION ON THIS AIRPLANE. REFER TO SRM 51-00-4, FIGURE 3 FOR THE APPLICABLE SSI INFORMATION.
- REFER TO THE FOLLOWING WHEN USING THIS REPAIR:
  - SRM 51-10-1 FOR DAMAGE CLASSIFICATION
  - SRM 51-10-2 FOR PROTECTIVE TREATMENT OF METAL
  - SRM 51-20-4 FOR REPAIR SEALING
  - SRM 51-30 FOR FASTENER CODES, REMOVAL AND INSTALLATION, HOLE SIZES AND EDGE MARGINS
  - SRM 51-70 FOR AERODYNAMIC SMOOTHNESS
  - AMM 51-21 FOR INTERIOR AND EXTERIOR FINISHES.
- P = FASTENER SPACING

[A] IN AREAS WHERE SHEAR TIES ON A FRAME ARE PART OF THE REPAIR:
- ADJUST THE SPACING OF THE RIVETS AS NECESSARY
- MAKE THE CHANGES THAT ARE NECESSARY TO FIT A SHEAR TIE.

[B] USE A THICKNESS THAT IS ONE GAGE GREATER THAN THE SKIN.

[C] USE THE SAME GAGE AS THE INITIAL BONDED CHEM-MILLED DOUBLER.

[D] USE THE SAME GAGE AS THE SKIN.

Flush Repair for Damage to Fuselage Skin and Doubler
Figure 8 (Sheet 1)

BOEING PROPRIETARY - Copyright © - Unpublished Work - See title page for details.

REPAIR MATERIAL			
PART		QTY	MATERIAL
1	DOUBLER	1	CLAD 2024-T3 B
2	FILLER	1	CLAD 2024-T3 C
3	FILLER	1	CLAD 2024-T3 D

TABLE I

INITIAL SKIN GAGE	FASTENER		FASTENER SPACING (P) ± 0.03 INCH
	PREFERRED	OPTIONAL	
0.032	BACR15BB5D		0.78
0.036	BACR15BB5D		0.78
0.040	BACR15BB5D		0.78
		BACR15BB6D	0.94
0.045	BACR15BB5D		0.78
		BACR15BB6D	0.94
0.050	BACR15BB6D		0.94
		BACR15CE5D	0.78
0.056	BACR15BB6D		0.94
0.063	BACR15CE6D	BACR15BB6D	0.94

TABLE II

DO NOT USE AFTER JULY 10, 2003
OBSOLETE
SEE FIGURE 48 OR FIGURE 49

Flush Repair for Damage to Fuselage Skin and Doubler
Figure 8 (Sheet 2)

BOEING PROPRIETARY - Copyright © - Unpublished Work - See title page for details.

FASTENER SYMBOLS

REPAIR FASTENER LOCATION
REFER TO TABLE II.

REPAIR FASTENER LOCATION
INSTALL BACR15BB6D RIVETS IF THE THICKNESS OF THE BONDED DOUBLER IS LARGER THAN 0.036 INCH. IF THE BONDED DOUBLER IS 0.036 INCH OR LESS, REFER TO TABLE II.

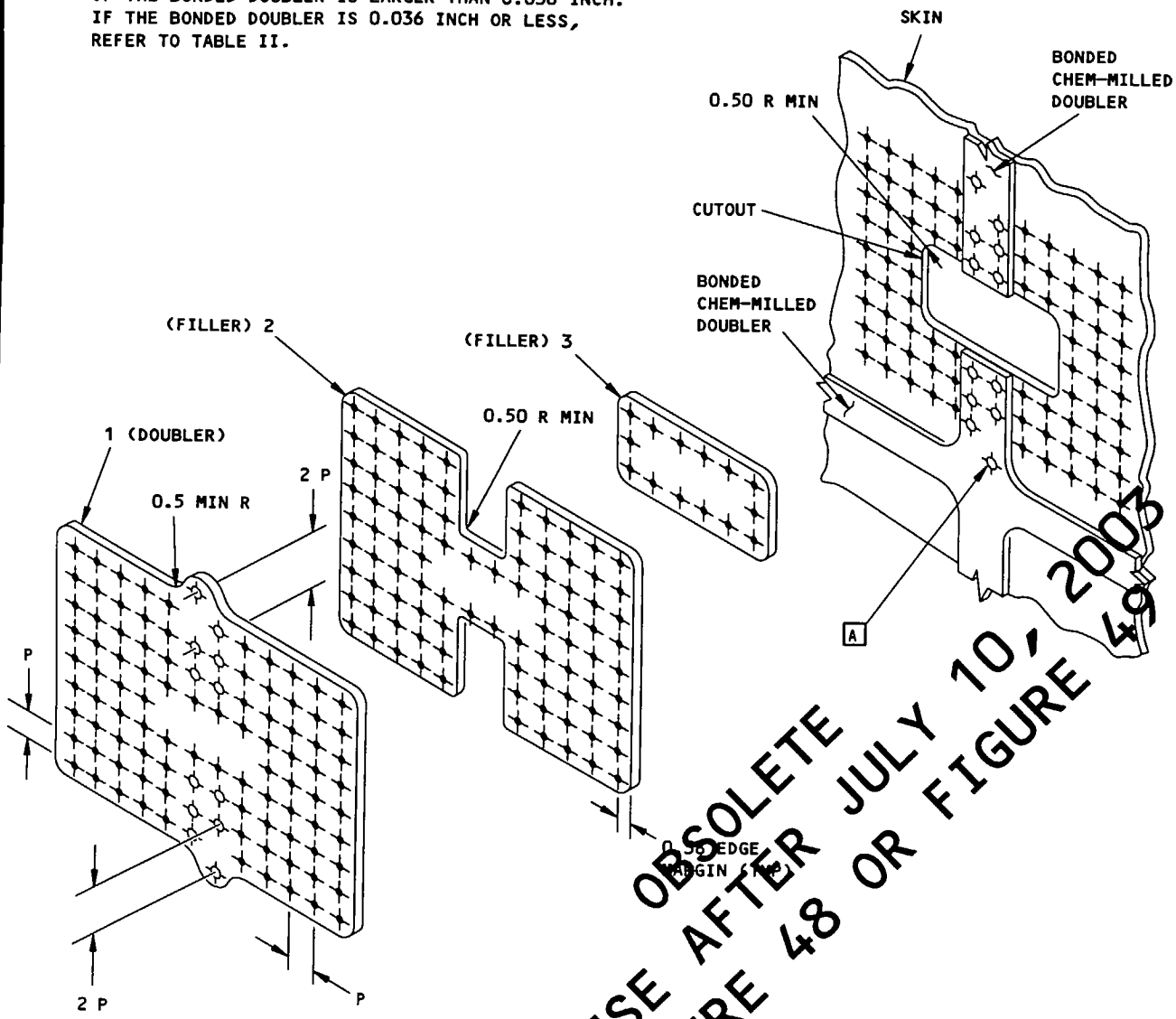

VIEW ON INSIDE OF SKIN
DETAIL I

DO NOT USE AFTER JULY 10, 2003
SEE FIGURE 48 OR FIGURE 49
OBSOLETE

Flush Repair for Damage to Fuselage Skin and Doubler
Figure 8 (Sheet 3)

BOEING PROPRIETARY - Copyright © - Unpublished Work - See title page for details.

APPLICABILITY

THIS REPAIR IS NOT APPLICABLE IN REGIONS OF STATIC PRESSURE PORTS. THIS REGION IS DEFINED IN SRM 51-70, FIG. 3. FOR REPAIRS IN REGIONS OF PITOT-STATIC PROBES AND ANGLE OF AIRFLOW SENSORS, REFER TO SRM 51-70, FIG. 5. AND 8.

THIS REPAIR IS APPLICABLE TO FUSELAGE SKIN LAP JOINTS IN PRESSURIZED OR NONPRESSURIZED AREAS.

THIS REPAIR IS ONLY APPLICABLE TO:

1. BS 178 TO BS 1092 ON AIRPLANES WITH CUM LINE NUMBERS 1 THRU 291
2. AREAS OF SKIN AND CONTINUOUS HOT BONDED DOUBLER (AREAS WHERE THE UPPER AND LOWER SKIN AND DOUBLER ASSEMBLY DO NOT HAVE POCKETS).
3. THE AREAS BETWEEN TEAR STRAPS IN THE WAFFLE DOUBLER LOCATIONS. (DO NOT CUT THE TEAR STRAPS.)

IF THE STRINGER IS DAMAGED, REFER TO SRM 53-30-3, FIGURE 10 FOR THE STRINGER REPAIR.

REPAIR INSTRUCTIONS

1. Remove the lap splice fasteners as necessary.

   CAUTION: DO NOT CUT THE TEAR STRAPS. DO NOT MAKE A NICK OR GOUGE IN THE STRINGER WHEN YOU MAKE THE CUTOUT.

2. Carefully make the cutout as necessary. See Detail I.
3. Return all indented or projecting skin to contour.
4. Make the repair parts given in Table I and shown in Detail I. Make the surface contour of the repair parts the same as the surface contour of the skin panels.
5. Assemble the repair parts. See Detail I.
6. Drill the fastener holes.

   NOTE: If there are more than three initial fastener holes, one after another, in one of the critical fastener rows, these holes can be zero-timed. Zero-timing will make the inspection threshold start from the time the repair was installed. Refer to paragraph "Hole Preparation for Repairs" in SRM 51-10-1 for the zero-timing procedure.

7. Disassemble the repair parts.
8. Remove all nicks, scratches, burrs and sharp edges from the initial and repair parts.
9. Apply a protective chemical conversion coating to the repair parts and the cut edges of the initial parts. Refer to SRM 51-10-2.
10. Apply one coat of BMS 10-79, Type II or Type III primer to repair parts and the cut edges of the initial parts. Refer to SOPM 20-44-04.
11. Install countersink repair washers as given in SRM 51-30-08.
12. Install the repair parts with BMS 5-95 sealant between the mating surfaces. Refer to SRM 53-30-4.
13. Install the fasteners given in Table II.
14. Apply a fillet seal with BMS 5-95 sealant along the edges of the repair part. Refer to SRM 51-20-4.
15. Apply the finish to the repair area. Refer to AMM 51-21.
16. Apply corrosion inhibiting compound on the internal surfaces. Refer to SRM 51-10-2.

OBSOLETE
DO NOT USE AFTER JULY 10, 2003
SEE FIGURE 48 OR FIGURE 49

Fuselage Skin Lap Joint - External Repair for Damaged Upper and Lower Skins and Doubler
Figure 9 (Sheet 1)

BOEING PROPRIETARY - Copyright © - Unpublished Work - See title page for details.

NOTES

- THE SOLID RIVET REPAIR IS CATEGORY A AND NO SUPPLEMENTAL INSPECTIONS ARE NECESSARY IF CONDITION 1, 2 OR 3 IS MET:

  1. a) THE CRITICAL FASTENER ROWS IN THE SKIN AND DOUBLER CAN BE VISUALLY INSPECTED FROM THE INSIDE

     b) THE BASE SKIN THICKNESS IS EQUAL TO OR GREATER THAN 0.056 INCH

     c) THE REPAIR IS NOT WITHIN 10 INCHES OF A CUTOUT.

  2. a) THE LENGTH AND WIDTH OF THE REPAIR PLATE IS LESS THAN OR EQUAL TO 12 INCHES

     b) THE CRITICAL FASTENER ROWS IN THE SKIN AND DOUBLER CAN BE VISUALLY INSPECTED FROM THE INSIDE

     c) NO OTHER REPAIR PLATE IS INSTALLED WITHIN 3 INCHES IN EITHER DIRECTION

     d) THE REPAIR IS NOT WITHIN 10 INCHES OF A CUTOUT.

  3. a) THE LENGTH OF THE REPAIR PLATE, IN THE LONGITUDINAL DIRECTION, IS LESS THAN OR EQUAL TO 12 INCHES

     b) THE REPAIR PLATE IS LOCATED BELOW S-10L OR S-10R

     c) THE CRITICAL FASTENER ROWS IN THE SKIN AND DOUBLER CAN BE VISUALLY INSPECTED FROM THE INSIDE

     d) NO OTHER REPAIR PLATE IS INSTALLED WITHIN 3 INCHES IN THE LONGITUDINAL DIRECTION

     e) THE REPAIR IS NOT WITHIN 10 INCHES OF A CUTOUT.

  IF THIS REPAIR IS NOT CATEGORY A, THEN IT IS CATEGORY B. THE CATEGORY B REPAIR HAS FAA APPROVAL IF YOU DO THE SUPPLEMENTAL INSPECTIONS GIVEN IN THE REPAIR ASSESSMENT PROGRAM. THE DAMAGE TOLERANCE ASSESSMENT OF THE REPAIR CAN BE DONE WITHIN THE TIME LIMIT SPECIFIED IN THE REPAIR ASSESSMENT PROGRAM AFTER YOU RELEASE THE AIRCRAFT TO SERVICE. REFER TO SRM 51-00-6 FOR GENERAL DATA ABOUT THE REPAIR ASSESSMENT PROGRAM. REFER TO TABLE III FOR INSPECTION REQUIREMENTS. SEE DETAIL II FOR THE INSPECTION AREA.

- THIS REPAIR WILL HAVE AN EFFECT ON THE STRUCTURAL SIGNIFICANT ITEM (SSI) NUMBER F-41 WHEN INSTALLED UNDER THE WING-TO-BODY FAIRING AND F-48, BUT THE INTERNAL INSPECTION ALTERNATIVES OF F-41 AND F-48 ARE STILL APPLICABLE. THEREFORE, NO NEW INSPECTION ALTERNATIVES ARE NECESSARY FOR THIS REPAIR. DO THE INSPECTIONS FOR F-41 AND F-48, IF NECESSARY, AT THE SUBSEQUENT SUPPLEMENTAL STRUCTURAL INSPECTION DOCUMENT (SSID) INSPECTION ON THIS AIRPLANE. REFER TO SRM 51-00-4,FIGURE 3 FOR THE APPLICABLE SSI DATA.

- WHEN YOU USE THIS REPAIR REFER TO:
  - AMM 51-21 FOR INTERIOR AND EXTERIOR FINISHES
  - SOPM 20-44-04 FOR APPLICATION OF CORROSION RESISTANT PRIMER
  - SRM 51-00-6 FOR REPAIR CATEGORIES, DEFINITIONS, AND REPAIR ASSESSMENT PROGRAM INFORMATION
  - SRM 51-10-1 FOR INVESTIGATION AND CLEANUP OF DAMAGE AND ZERO-TIMING PROCEDURE
  - SRM 51-10-2 FOR PROTECTIVE TREATMENT OF METALS
  - SRM 51-20-4 FOR SEALING OF REPAIRS
  - SRM 51-30 FOR FASTENER CODE, REMOVAL, INSTALLATION, HOLE SIZES, EDGE MARGINS AND SUBSTITUTION
  - SRM 51-30-8 FOR COUNTERSINK REPAIR WASHERS
  - SRM 51-70 FOR AERODYNAMIC SMOOTHNESS
  - SRM 53-30-4 FOR SEALING OF LAP SPLICES.

[A] SAME MATERIAL AND HEAT TREAT AND ONE GAGE GREATER THAN THE THICKER OF THE UPPER OR LOWER SKIN, OR SKIN PLUS DOUBLER (IF PRESENT). REFER TO 51-20-1, FIG. 2, FOR LIST OF AVAILABLE SHEET METAL GAGES.

[B] SAME GAGE AS THE UPPER SKIN, OR SKIN PLUS DOUBLER (IF PRESENT).

[C] SAME GAGE AS TOTAL THICKNESS OF THE UPPER AND LOWER SKINS AND DOUBLERS (IF PRESENT).

[D] USE SAME FASTENER SPACING AS INITIAL FASTENER SPACING AT THE LAP SPLICE.

[E] THIS SKIN GAGE REFERS TO GAGE OF THE UPPER OR LOWER INITIAL SKIN, WHICHEVER IS THICKER.

OBSOLETE AFTER JULY 10, 2003
DO NOT USE
SEE FIGURE 48 OR FIGURE 49

Fuselage Skin Lap Joint - External Repair for Damaged Upper and Lower Skins and Doubler
Figure 9 (Sheet 2)

BOEING PROPRIETARY - Copyright © - Unpublished Work - See title page for details.

NOTES (CONTINUED)

[F] IF POSSIBLE, EXTEND THE SPLICE PLATE AN ADDITIONAL ROW PAST THE INITIAL FASTENER ROWS OF INTERNAL STRUCTURE. IF THE SPLICE PLATE ENDS ON INTERNAL STRUCTURE, THE REPAIR IS CATEGORY B. [J]

NOTE: INTERNAL STRUCTURE INCLUDES STRINGERS, FRAMES, INTERCOSTALS, REINFORCING STRAPS OR OTHER STRUCTURE THAT IS RIVETED OR BOLTED TO THE SKIN.

[G] IF THE INITIAL FASTENER IS 5/32 INCH DIA, REPLACE IT WITH A 7/32 INCH DIA PROTRUDING HEAD FASTENER.
IF THE INITIAL FASTENER IS 3/16 INCH DIA, REPLACE IT WITH A 1/4 INCH DIA PROTRUDING HEAD FASTENER.

[H] REFER TO OPERATOR'S REPAIR ASSESSMENT GUIDELINES FOR THE REPEAT INSPECTION INTERVAL AND METHOD ALTERNATIVES.

[I] INSTALL REPAIR WASHERS AT THE INITIAL FASTENER LOCATIONS AS NECESSARY.

[J] IF ONE OF THE CRITICAL FASTENER ROWS HAS MORE THAN THREE INITIAL FASTENER HOLES, ONE AFTER ANOTHER, THE THRESHOLD STARTS:

- FROM THE TIME THE REPAIR WAS INSTALLED IF THE HOLES HAVE BEEN ZERO-TIMED
- FROM THE TIME THE AIRPLANE WAS DELIVERED IF THE HOLES HAVE NOT BEEN ZERO-TIMED

FASTENER SYMBOLS

+ INITIAL FASTENER LOCATION. SEE TABLE II FOR FASTENER TYPE. [G]

⊕ REPAIR FASTENER LOCATION. SEE TABLE II FOR FASTENER TYPE.

REPAIR MATERIAL			
PART		QTY	MATERIAL
1	SPLICE PLATE	1	[A]
2	FILLER	1	CLAD 2024-T3 [C]
3	STRUCTURAL FILLER	1	CLAD 2024-T3 [B]

TABLE I

FASTENERS				
INITIAL SKIN GAGE [E] (INCH)	INITIAL AND REPAIR FASTENER LOCATIONS [G]		SPACING	EDGE MARGIN (INCH)
	RECOMMENDED	ALTERNATE		
0.036-0.063	BACR15BB5D	MS20470D5	[D]	0.36
0.063-0.080	BACR15BB6D	MS20470D6	[D]	0.42

TABLE II

DO NOT USE OBSOLETE AFTER JULY 10, 2003
SEE FIGURE 48 OR FIGURE 49

Fuselage Skin Lap Joint - External Repair for Damaged Upper and Lower Skins and Doubler
Figure 9 (Sheet 3)

BOEING PROPRIETARY - Copyright © - Unpublished Work - See title page for details.

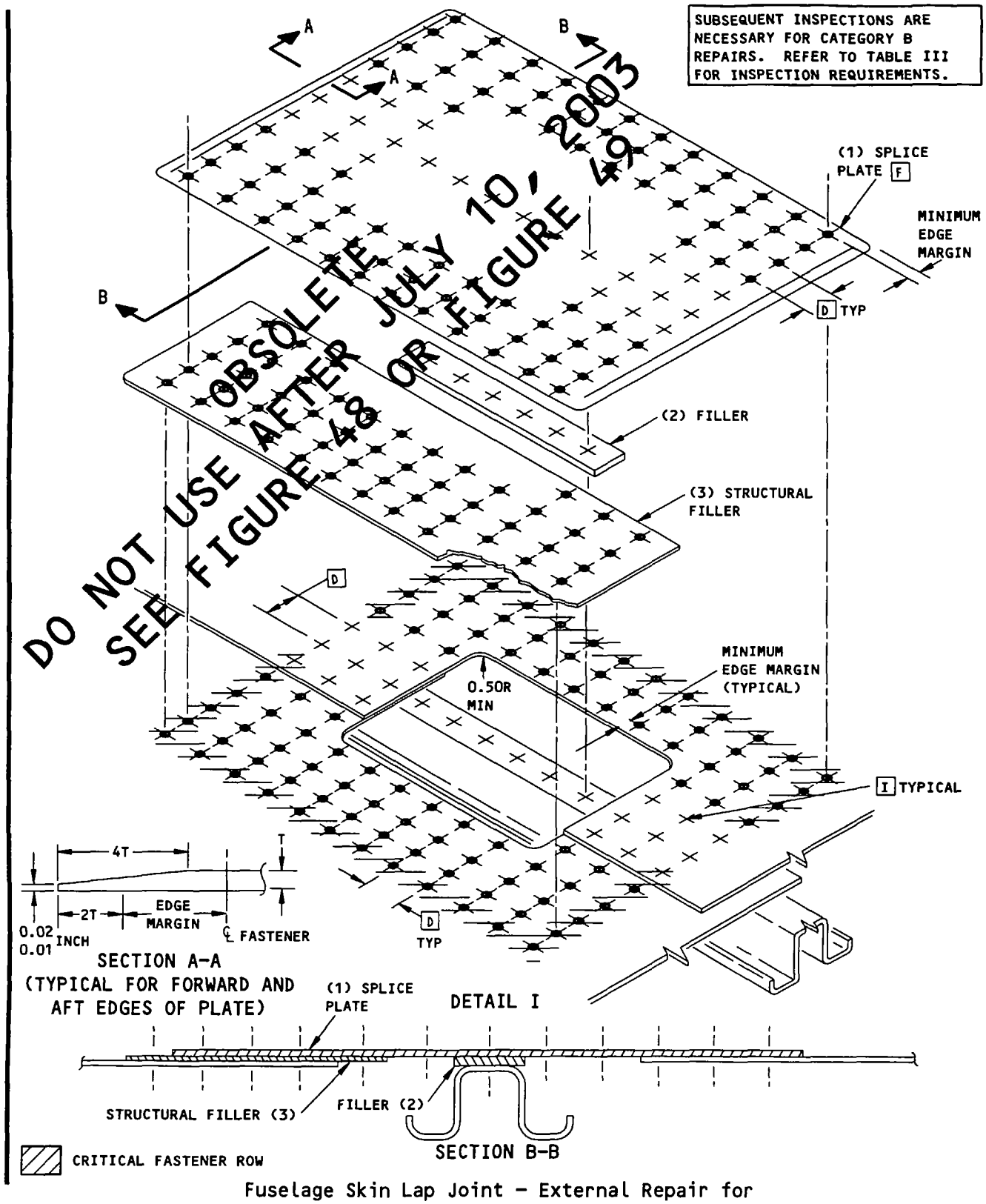

OBSOLETE JULY 10, 2003
DO NOT USE AFTER FIGURE 48 OR FIGURE 49
SEE FIGURE 48

Fuselage Skin Lap Joint - External Repair for Damaged Upper and Lower Skins and Doubler
Figure 9 (Sheet 4)

BOEING PROPRIETARY - Copyright © - Unpublished Work - See title page for details.

CATEGORY B REPAIR INSPECTION REQUIREMENTS		
INSPECTION THRESHOLD	REPEAT INSPECTION ALTERNATIVES	
	METHOD	INTERVAL
60,000 CYCLES [J]	[H]	[H]
NOTE: Inspect skin and doubler around the first row of fasteners along the edge of the splice plate and structural filler as shown in Detail II.		

TABLE III

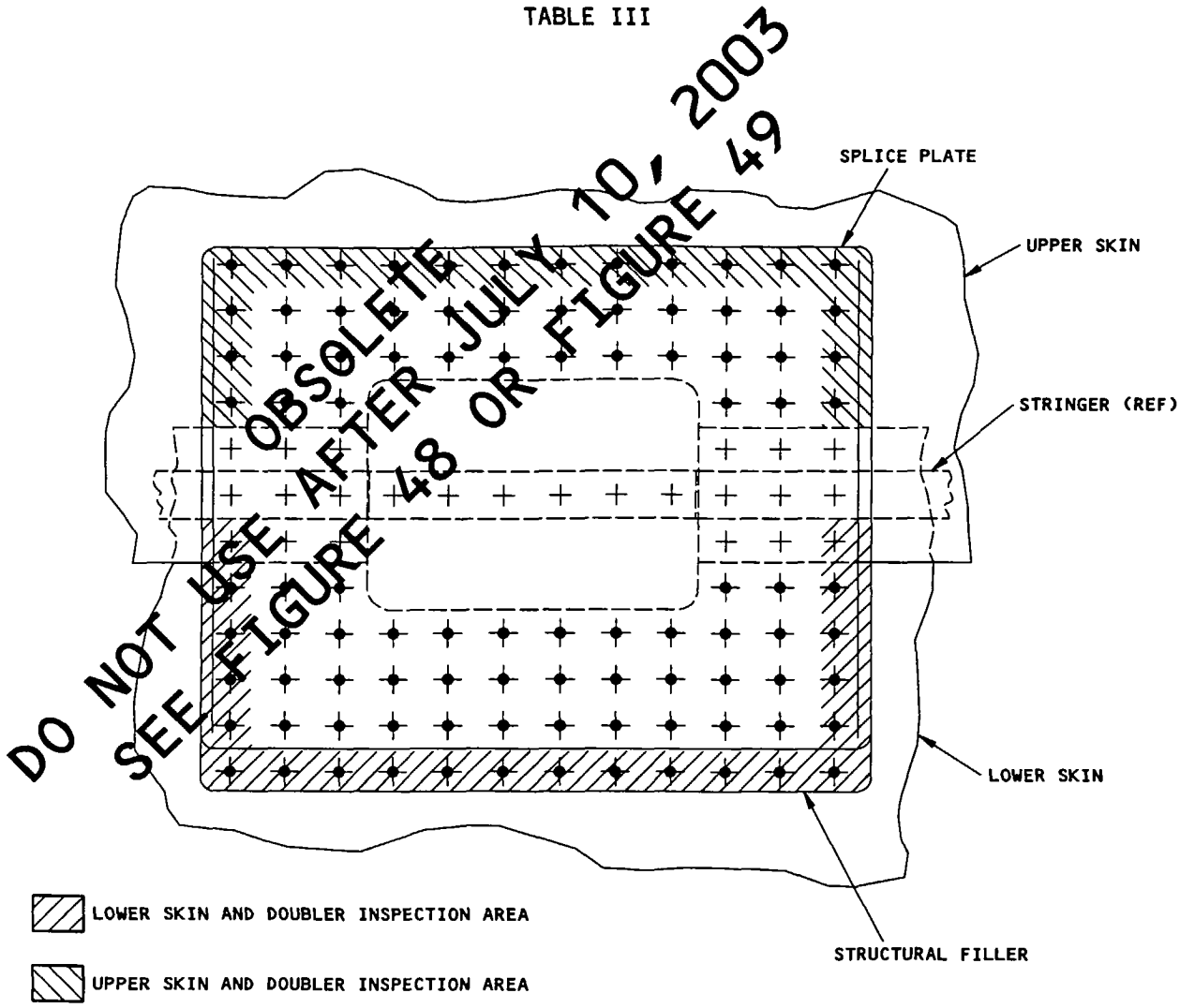

DO NOT USE AFTER JULY 10, 2003
SEE FIGURE 48 OR FIGURE 49
OBSOLETE

DETAIL II

Fuselage Skin Lap Joint - External Repair for
Damaged Upper and Lower Skins and Doubler
Figure 9 (Sheet 5)

BOEING PROPRIETARY - Copyright © - Unpublished Work - See title page for details.

APPLICABILITY

THIS REPAIR APPLIES TO SKIN AND BONDED DOUBLER AREAS BETWEEN BS 259.5 AND BS 1010 FOR CUM LINE NUMBERS 1 THRU 291.

REPAIR INSTRUCTIONS

1. Determine the extent of the repair and drill out the stringer rivets over this area.
2. Cut and remove the portion of stringer involved taking care not to damage the skin.
3. Refer to 53-10-3, Fig. 1 or 3 for appropriate repair to stringer.
4. Cut out the damaged portions of skin and doublers.
5. Radius the corners of the doublers taking care not to damage the skins.
6. Make the parts for the skin repair.
7. Assemble parts and drill to suit existing and repair fasteners.
8. Remove repair parts.
9. Bond all faying surfaces according to 51-40-5.
10. Install fasteners except for those required for the stringer repair.
11. Repair stringer and install fasteners.
12. Seal repair according to 53-30-4.
13. Replace original finish according to 51-21-0 of the 737 Maintenance Manual.

NOTES

- THIS IS A CATEGORY A REPAIR. THE INSPECTIONS GIVEN IN THE BASELINE ZONAL INSPECTION (BZI) ARE SUFFICIENT TO MAINTAIN THE DAMAGE TOLERANCE OF THE INITIAL STRUCTURE WITH THIS REPAIR INSTALLED. REFER TO 51-00-6 FOR REPAIR CATEGORIES, BZI DEFINITION AND REPAIR ASSESSMENT INFORMATION.
- THIS REPAIR WILL HAVE AN EFFECT ON THE STRUCTURAL SIGNIFICANT ITEM (SSI):
  - NUMBER F-48, BUT THE EXTERNAL INSPECTION ALTERNATIVES FOR F-48A THROUGH F-48C ARE STILL APPLICABLE
  - NUMBER F-41 WHEN INSTALLED UNDER THE WING-TO-BODY AND LOWER LOBE FAIRINGS, BUT THE INSPECTION ALTERNATIVES ARE STILL APPLICABLE.

  THEREFORE, NO NEW INSPECTION ALTERNATIVES ARE NECESSARY FOR THIS REPAIR. DO THE INSPECTIONS FOR F-41 AND F-48, IF NECESSARY, AT THE SUBSEQUENT SUPPLEMENTAL STRUCTURAL INSPECTION DOCUMENT (SSID) INSPECTION ON THIS AIRPLANE. REFER TO SRM 51-00-4, FIGURE 3 FOR THE APPLICABLE SSI INFORMATION.
- BREAK ALL SHARP EDGES 0.015R TO 0.005R
- SEE SRM 51-10-2 FOR PROTECTIVE TREATMENT OF METALS
- SEE SRM 51-30 FOR FASTENER CODE, REMOVAL, INSTALLATION, HOLE SIZES AND EDGE MARGINS

[A] GAGE SAME AS OVERLAPPING SKIN

[B] GAGE SAME AS LEAST SKIN GAGE AT SPLICE

[C] GAGE SAME AS OVERLAPPED SKIN

[D] BETWEEN EXISTING DOUBLER AND REPAIR PLATES IF AND AS REQUIRED

[E] BETWEEN EXISTING AND REPAIR STRINGER, THICKNESS AS REQUIRED

[F] INSTALL FASTENERS THAT ARE THE SAME DIAMETER AND TYPE AS THOSE USED IN THE INITIAL SPLICE, EXCEPT USE PROTRUDING HEAD FASTENERS. REINSTALLING COUNTERSINK FASTENERS IN THE INITIAL SPLICE COULD CAUSE A KNIFE-EDGE CONDITION.

[G] FASTENERS SPACED SIMILAR TO THOSE IN LAP JOINT

FASTENER SYMBOLS

+ ORIGINAL FASTENER LOCATIONS

REPAIR FASTENER LOCATION

REPAIR FASTENER LOCATION

DO NOT USE AFTER JULY 10, 2003
OBSOLETE
SEE FIGURE 48 OR FIGURE 49

Fuselage Skin Lap Joint - Flush Repair
Figure 10 (Sheet 1)

BOEING PROPRIETARY - Copyright © - Unpublished Work - See title page for details.

REPAIR MATERIAL			
PART		QTY	MATERIAL
1	FILLER	1	CLAD 2024-T3 [C]
2	FILLER	1	CLAD 2024-T3 [A]
3	PLATE	1	CLAD 2024-T3 [B]
4	PLATE	1	CLAD 2024-T3 [C]
5	SHIM	1	CLAD 2024-T3 [D]
6	SHIM	2	CLAD 2024-T3 [E]
7	SHIM	1	2024-T3 [D]

OBSOLETE
DO NOT USE AFTER JULY 10, 2003
SEE FIGURE 48 OR FIGURE 49

Fuselage Skin Lap Joint - Flush Repair
Figure 10 (Sheet 2)

BOEING PROPRIETARY - Copyright © - Unpublished Work - See title page for details.

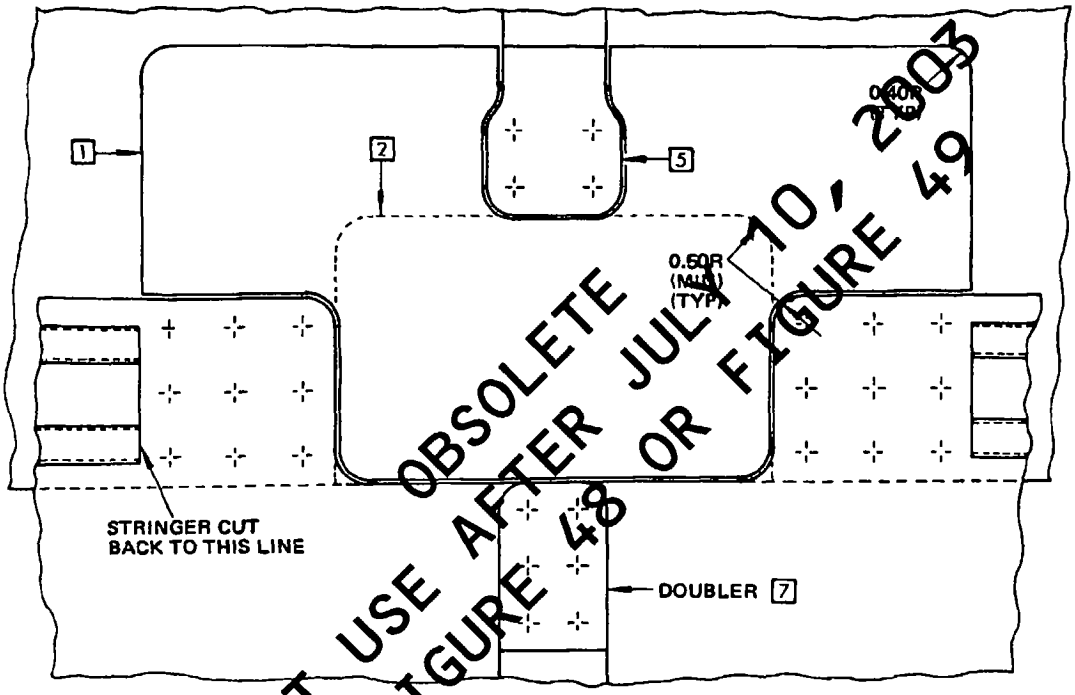

VIEW ON INSIDE OF SKIN
DAMAGED SKINS CLEANED UP AND FILLERS IN POSITION
STAGE 1

DO NOT USE AFTER JUL 10, 2003
SEE FIGURE 48 OR FIGURE 49

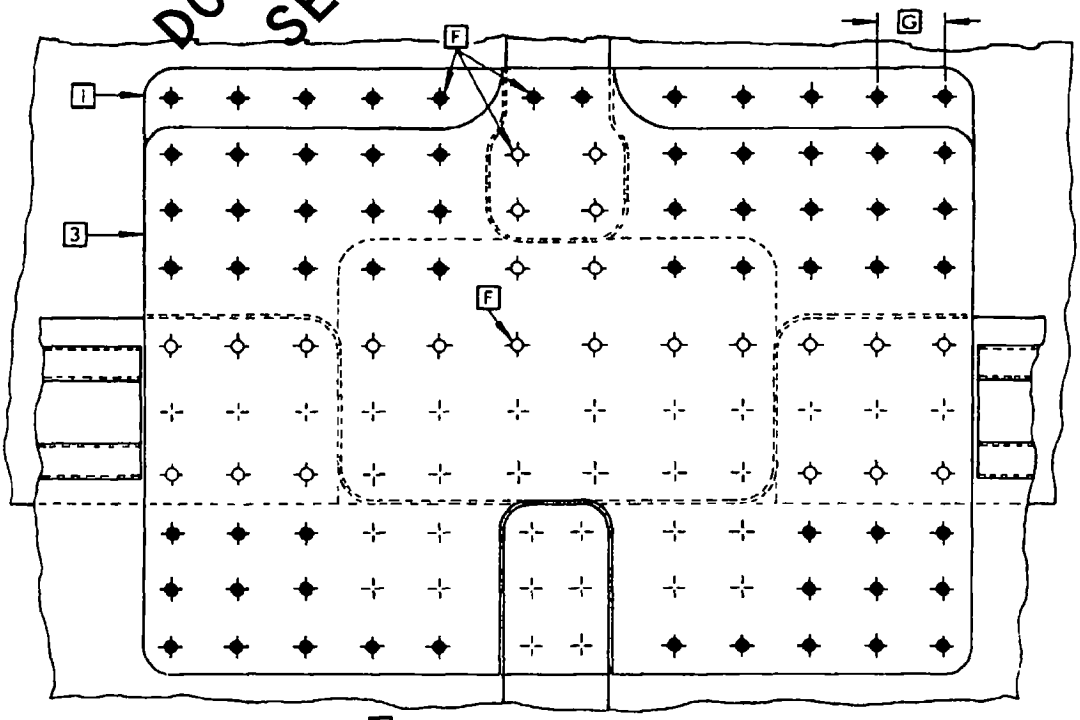

REPAIR PLATE 3 INSTALLED TO BRIDGE UPPER AND LOWER SKINS
STAGE 2

Fuselage Skin Lap Joint - Flush Repair
Figure 10 (Sheet 3)

BOEING PROPRIETARY - Copyright © - Unpublished Work - See title page for details.

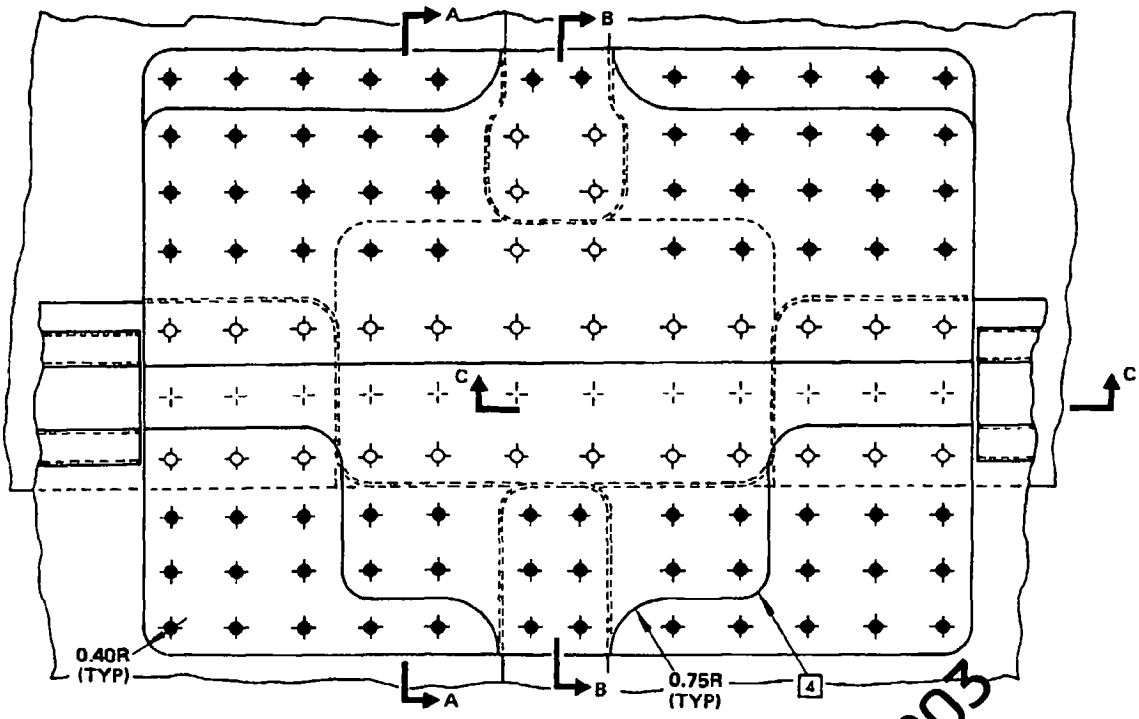

REPAIR PLATE 4 INSTALLED

STAGE 3

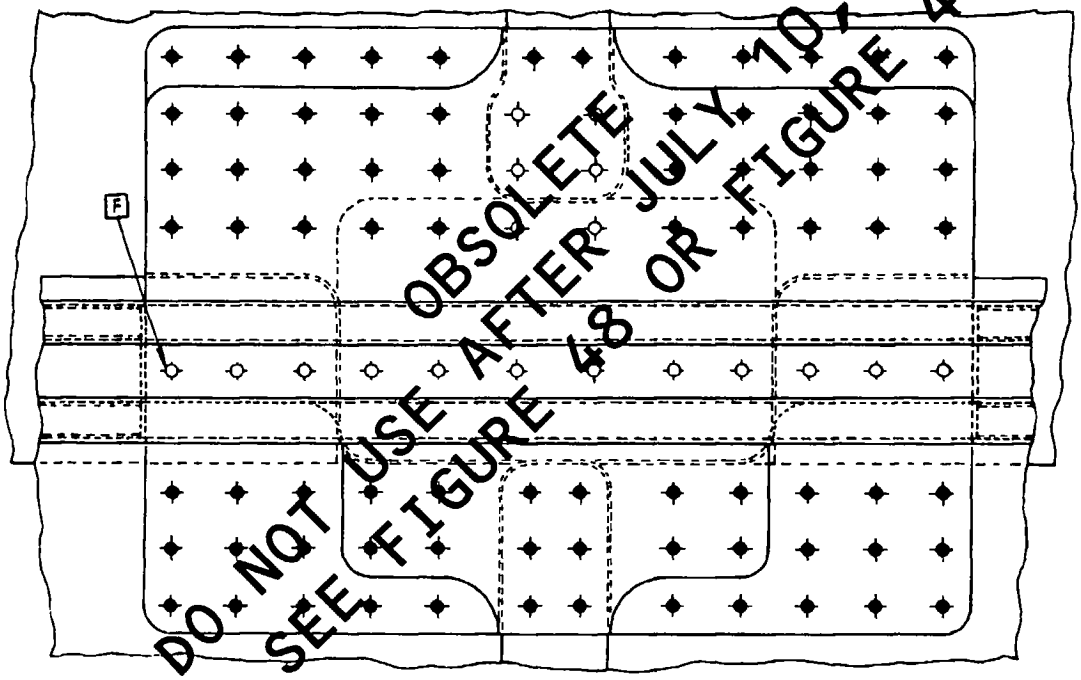

DO NOT USE AFTER JULY 10, 2003
OBSOLETE
SEE FIGURE 48 OR FIGURE 49

STRINGER REPAIRED
(SEE 53-10-3 FOR TYPICAL REPAIRS)

STAGE 4

Fuselage Skin Lap Joint - Flush Repair
Figure 10 (Sheet 4)

BOEING PROPRIETARY - Copyright © - Unpublished Work - See title page for details.

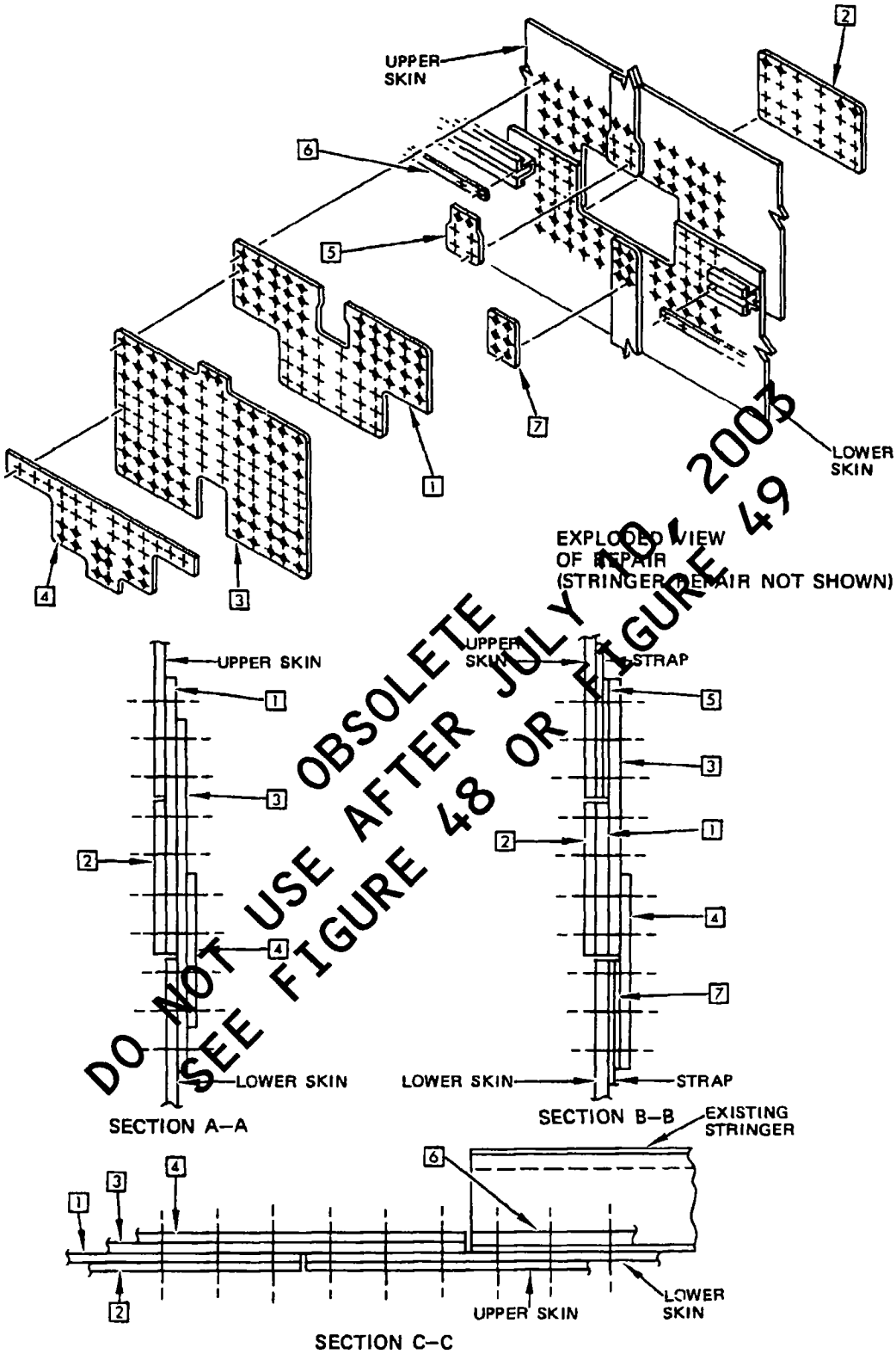

DO NOT USE AFTER JULY 10, 2003
OBSOLETE
SEE FIGURE 48 OR FIGURE 49

Fuselage Skin Lap Joint - Flush Repair
Figure 10 (Sheet 5)

BOEING PROPRIETARY - Copyright © - Unpublished Work - See title page for details.

APPLICABILITY
USE THESE REPAIRS FOR DAMAGED SKINS AND CRACKS UP TO 1.50 INCHES IN LENGTH. REFER TO THE BOEING COMPANY SERVICE UNIT FOR REPAIRS TO DAMAGE IN EXCESS OF THIS.

REPAIR INSTRUCTIONS

1. Remove fasteners, windows and all equipment as necessary to gain access for installing repair plate.
2. Temporarily insert a corrosion resistant steel plate under any cracks in the skin.
3. Drill a stop drill hole at the end of the crack. Refer to 51-10-1.
4. Make repair plate and bend to match contour of fuselage.
5. Enlarge the original holes affected by this repair except for the window attachment bolts. Locate and drill the required additional and matching holes in the repair plate and fuselage.
6. Apply a chemical conversion coating to the bare hole surfaces of the skin, and to the repair plate. Refer to 51-10-2.
7. Apply primer to the bare hole surfaces of the skin and to the repair parts as follows:
   - Apply one layer of BMS 10-79, Type II primer to the repair plate
   - Apply one layer of BMS 10-79, Type II primer to the bare hole surfaces of the skin.

   It is optional to use BMS 10-11, Type I primer.

   Refer to 51-21 of the Maintenance Manual.
8. Install repair washers as detailed in 51-30-8.
9. Install the repair plate, making a faying surface seal as detailed in 53-30-4, and using the indicated fasteners.
10. Refinish.
11. Reinstall window as described in 56-11-11 of the Maintenance Manual.

NOTES

- THIS IS A CATEGORY A REPAIR. THE INSPECTIONS GIVEN IN THE BASELINE ZONAL INSPECTION (BZI) ARE SUFFICIENT TO MAINTAIN THE DAMAGE TOLERANCE OF THE INITIAL STRUCTURE WITH THIS REPAIR INSTALLED. REFER TO 51-00-6 FOR REPAIR CATEGORIES, BZI DEFINITION AND REPAIR ASSESSMENT INFORMATION.
- BREAK SHARP, EDGES OF ORIGINAL AND REPAIR PARTS 0.015 TO 0.030
- REMOVE ALL NICKS, SCRATCHES, BURRS, SHARP EDGES AND CORNERS FROM ORIGINAL AND REPAIR PARTS
- ALL DIMENSIONS SHOWN IN INCHES
- REFER TO THE FOLLOWING WHEN USING THIS REPAIR:
  - SRM 51-10-2 FOR PROTECTIVE TREATMENT OF METAL
  - SRM 51-70-2 FOR AERODYNAMIC SMOOTHNESS REQUIREMENTS
  - SRM 53-30-4 FOR SEALING OF FUSELAGE SKIN REPAIRS
  - AMM 51-21-0 FOR INTERIOR AND EXTERIOR FINISHES
  - AMM 51-31-0 FOR SEALS AND SEALING

Skin Repair - Flight Compartment
Figure 11 (Sheet 1)

NOTES (CONT)

[A] MAINTAIN A MINIMUM EDGE THICKNESS OF 0.060 INCH AT EDGES OF REPAIR PLATE. TAPER AS INDICATED. SEE 51-70 FOR PERFORMANCE CONSIDERATIONS IN REGIONS OF CRITICAL SMOOTHNESS

[B] MAKE A FAYING SURFACE SEAL AND INSTALL ALL FASTENERS WET WITH PRIMER AS REQUIRED BY 51-10-2 AND 53-30-4

[C] SOME AIRPLANES HAVE A 0.025-INCH INCONEL X, AMS 5542, GUSSET INSTALLED BETWEEN THE SKIN AND THE WINDOW FRAME. IF THIS IS DAMAGED OR CRACKED REMOVE ALL NECESSARY FASTENERS AND SKIN AND REPLACE THE GUSSET OR SEE FIGURE 11A THIS SECTION FOR ALTERNATE REPAIR.

[D] WHERE HOLES ARE COUNTERSUNK ON BOTH INNER AND OUTER SURFACES OF STRUCTURE, ENLARGE COUNTERSINKS ON INNER SURFACE (AS REQUIRED) TO ACCOMMODATE REPAIR FASTENERS

[E] INSTALL REPAIR WASHERS, AS REUIRED BY 51-30-8, IN ALL COUNTERSUNK OR DIMPLED HOLES OF ORIGINAL STRUCTURE WHICH WILL BE COVERED BY REPAIR PARTS

[F] FINISH THE LEADING EDGE OF THE REPAIR PLATE, WITHIN THE INDICATED ARC, TO A SURFACE ROUGHNESS EQUIVALENT TO 63 MICRO-INCHES

[G] THESE RIVETS ARE TO BE INSTALLED ONLY WHEN THE EDGE MARGIN BETWEEN THE DRILLED HOLES AND THE CRACK OR CRACK STOP HOLE IS NOT LESS THAN 2D.

[H] INSTALL THESE FASTENERS WET WITH PRIMER AS DETAILED IN 51-10-2

[J] SEE REPAIR INSTRUCTIONS 2 AND 3

[K] BOEING PART HAS A DIFFERENT SHAPE THAN REPAIR PART SHOWN. USE FASTENER LOCATIONS INDICATED ON ENGINEERING DRAWING 69-71946

[L] BOEING PART NUMBER 65-45800-218 IS A SKIN REPLACEMENT, NOT A DOUBLER. THIS REPLACEMENT MAY BE MADE IN LIEU OF THE DOUBLER INSTALLATION. INSTALLATION SHOULD BE PER SERVICE BULLETIN 53-1059

[M] FOR CUM LINE NUMBER 492 AND ON

[N] FOR AIRPLANES NOT LISTED IN [M]

[O] REPAIR IV HAS BEEN DELETED. REFER TO SERVICE BULLETIN 737-53-1115 FOR REPAIR DATA

[P] DRILL 0.250 $\frac{0.261}{0.250}$ DIA HOLE IN REPAIR PLATE TO MATCH EXISTING HOLE LOCATION. COUNTERSINK 100° NEAR SIDE. INSTALL AN960D416 WASHERS AS REQUIRED TO ASSURE CORRECT INSTALLATION

[Q] TORQUE NUT 55-60 IN-LB

[R] THIS REPAIR WILL NOT HAVE AN EFFECT ON THE STRUCTURAL SIGNIFICANT ITEMS (SSI) GIVEN IN SRM 51-00-4, FIGURE 3.

[S] THIS REPAIR WILL HAVE AN EFFECT ON THE STRUCTURAL SIGNIFICANT ITEM (SSI) NUMBER F-45A, BUT THE INSPECTION ALTERNATIVES FOR F-45A OF THE SUPPLEMENTAL STRUCTURAL INSPECTION DOCUMENT (SSID) ARE STILL APPLICABLE. DO THIS INSPECTION AT THE SUBSEQUENT SSID INSPECTION ON THIS AIRPLANE. REFER TO SRM 51-00-4 FOR THE SSI INFORMATION.

[T] THIS REPAIR WILL HAVE AN EFFECT ON SSI NUMBER F-45B. IN THE AREA OF THE EXTERNAL REPAIR PLATE, DO THE INSPECTION SPECIFIED IN SSI F-45B OF THE SUPPLEMENTAL STRUCTURAL INSPECTION DOCUMENT (SSID), EXCEPT REPLACE THE INSPECTION OF THE SKIN WITH AN INSPECTION OF THE REPAIR PLATE. PAY PARTICULAR ATTENTION TO THE EDGES OF THE SKIN, DOUBLER AND CHORD IN THE INSPECTION AREA. DO THIS INSPECTION AT THE SUBSEQUENT SSID INSPECTION ON THIS AIRPLANE. REFER TO SRM 51-00-4, FIG. 3 FOR THE APPLICABLE SSI DATA.

FASTENER SYMBOLS

- ORIGINAL FASENER LOCATION
- BACR15CE6D REPAIR FASTENER IN EXISTING LOCATIONS
- BACR15CE6D REPAIR FASTENER IN NEW LOCATIONS
- BACR15CE8D REPAIR FASTENER IN EXISTING LOCATIONS
- BACB30LH3 FASTENER IN EXISTING LOCATIONS
- NAS517-3 SCREW (IN EXISTING LOCATION). DRILL 0.189 +0.003/-0.000 HOLE IN REPAIR PLATE

Skin Repair - Flight Compartment
Figure 11 (Sheet 2)

BOEING PROPRIETARY - Copyright © - Unpublished Work - See title page for details.

SYMBOLS (CONT)

- BACB30FQ6A 1/64 OVERSIZE HI-LOK (IN EXISTING LOCATION)
- EXISTING RIVET LOCATION. WHERE CRACK EXISTS, INSTALL BACR15BA6AD RIVET IN COUNTERSINK 0.048 DEEP. MICROSHAVE HEAD AFTER INSTALLATION. KEEP 0.38 INCH MINIMUM EDGE MARGIN. WHERE NO CRACK EXISTS, INSTALL BACR15CE6D RIVET
- BACR15CE5D RIVET
- BACB30FN6A HI-LOK, BACC30M COLLAR
- BACB30LR3-5 BOLT
- BACR15CE6D RIVET. KEEP A 0.38 INCH MINIMUM EDGE MARGIN
- BACB30LR3-3 BOLT
- BACB30LR3-4 BOLT
- BACR15DS7 RIVET
- BACB30LR4-8 BOLT, BACN10JC4 NUT
- BACB30LR4-19 BOLT, BACN10JC4 NUT
- BACCB30FQ8 1/64 OVERSIZE HI-LOK IN EXISTING LOCATION
- INSTALL BACR15AD()D() RIVET IN EXISTING LOCATION
- BACB30LR4-() BOLT
- BACB30LR3-() BOLT
- BACB30LH3-() WINDOW ATTACHMENT BOLT IN EXISTING LOCATION

REPAIR MATERIAL			
PART		QTY	MATERIAL
1	PLATE	1	0.125 2024-0 HT-T4 OR BOEING P/N 65-45800-218 [L]
2	PLATE	1	0.090 CLAD 2024-0 HT-T4 OR BOEING P/N 69-71947-1 (-2 OPP)
3	REPAIR WASHER [E]	AS REQD	2024-T4
4	PLATE [K]	1	0.080 CLAD 2024-T3 OR BOEING P/N 69-71946-1 (-2 OPP)
5	DELETED		
6	PLATE [M]	1	0.080 CLAD 2024-T3
7	PLATE [N]	1	0.050 CLAD 2024-T3
8	PLATE	1	0.080 CLAD 2024-T42
9	PLATE	1	0.063 CLAD 2024-T3 PER BOEING P/N 69-70831-2

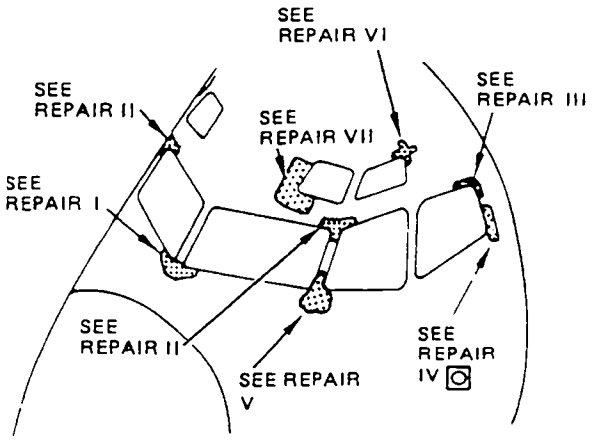

Skin Repair - Flight Compartment
Figure 11 (Sheet 2A)

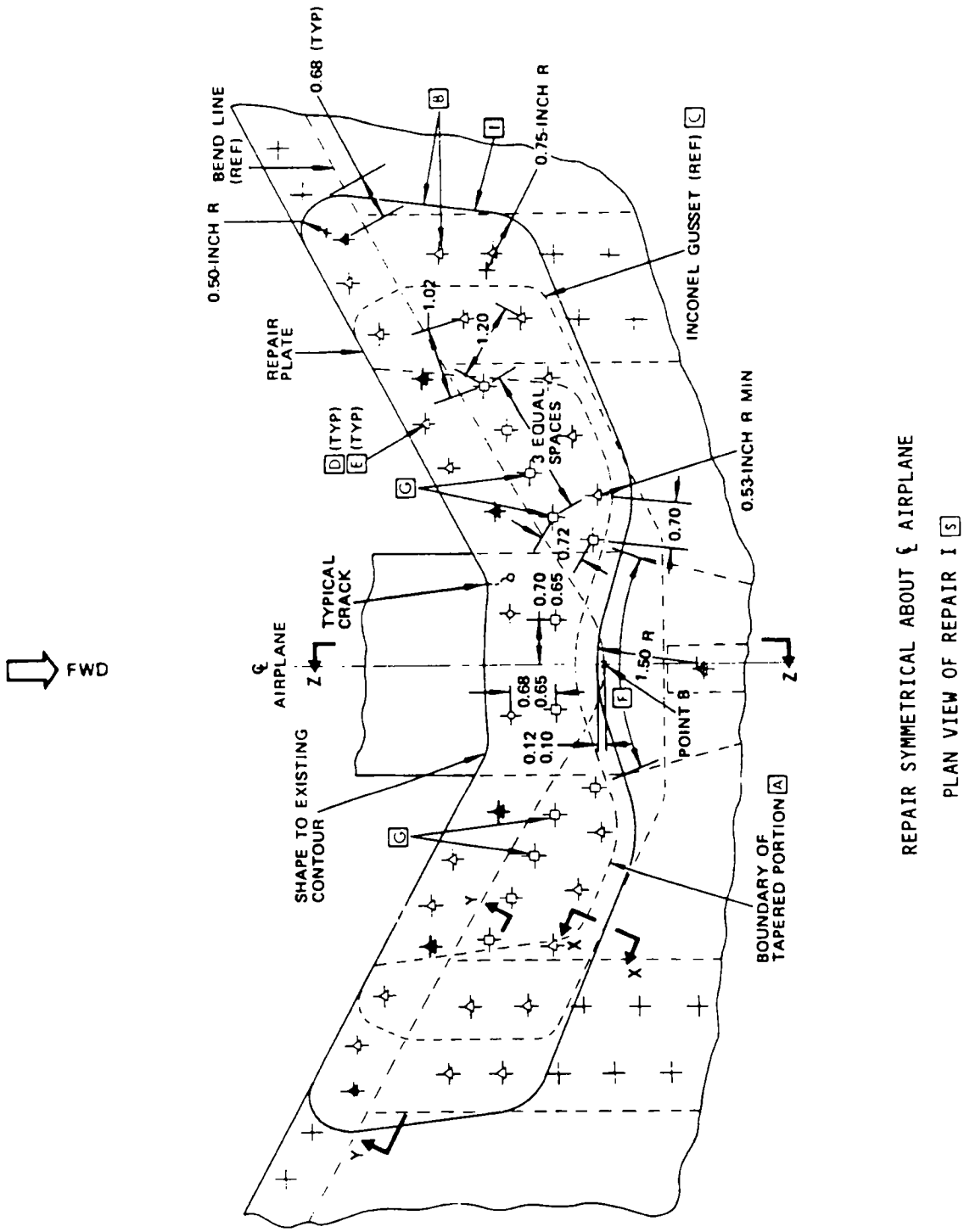

REPAIR SYMMETRICAL ABOUT ℄ AIRPLANE

PLAN VIEW OF REPAIR I S

Skin Repairs - Flight Compartment
Figure 11 (Sheet 3)

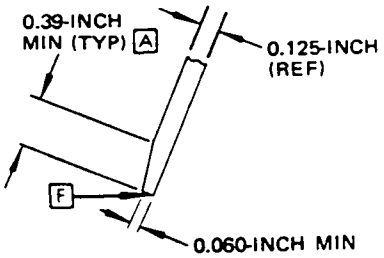

SECTION X–X

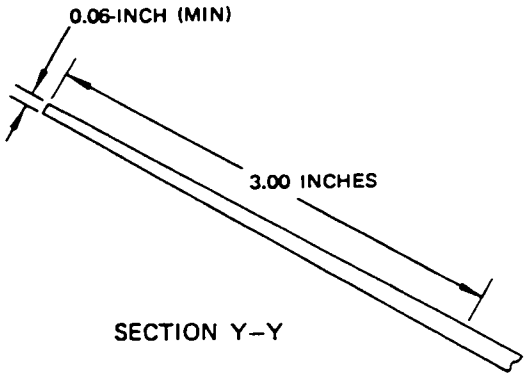

SECTION Y–Y

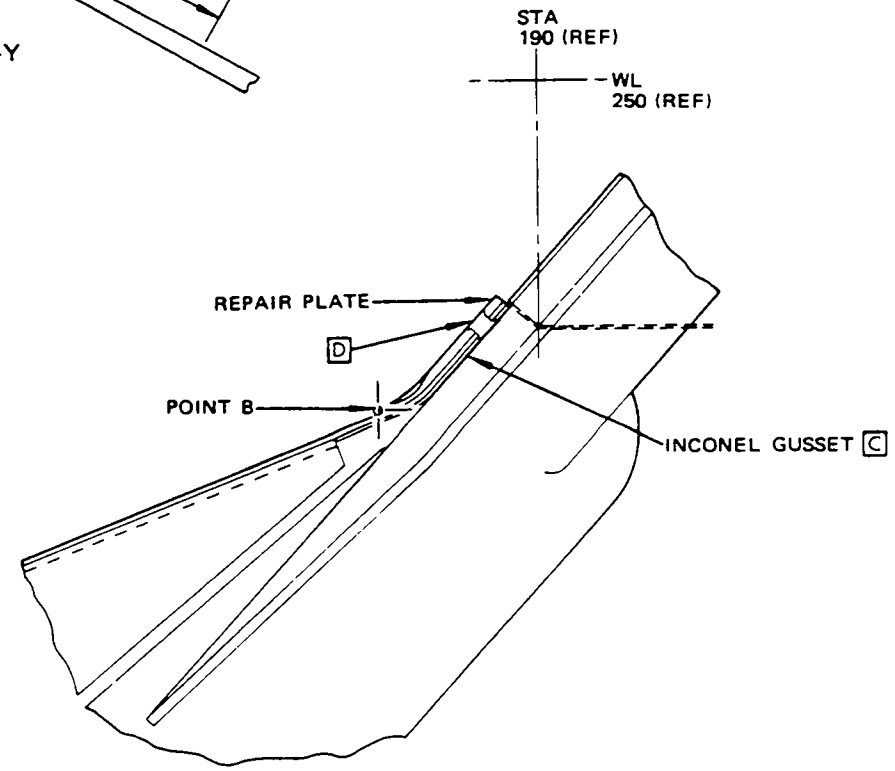

SECTION Z–Z

Skin Repairs - Flight Compartment
Figure 11 (Sheet 4)

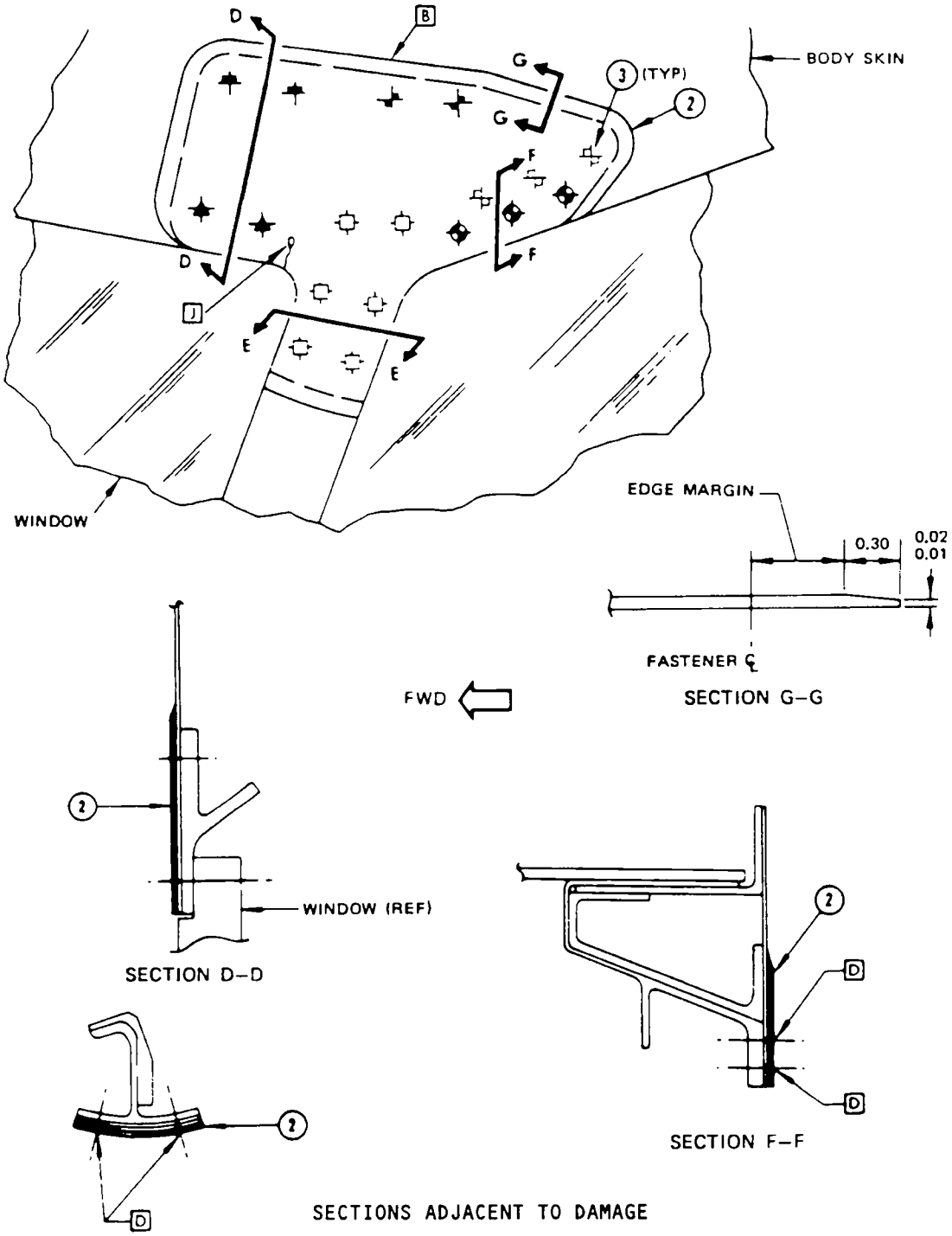

Skin Repairs - Flight Compartment
Figure 11 (Sheet 5)

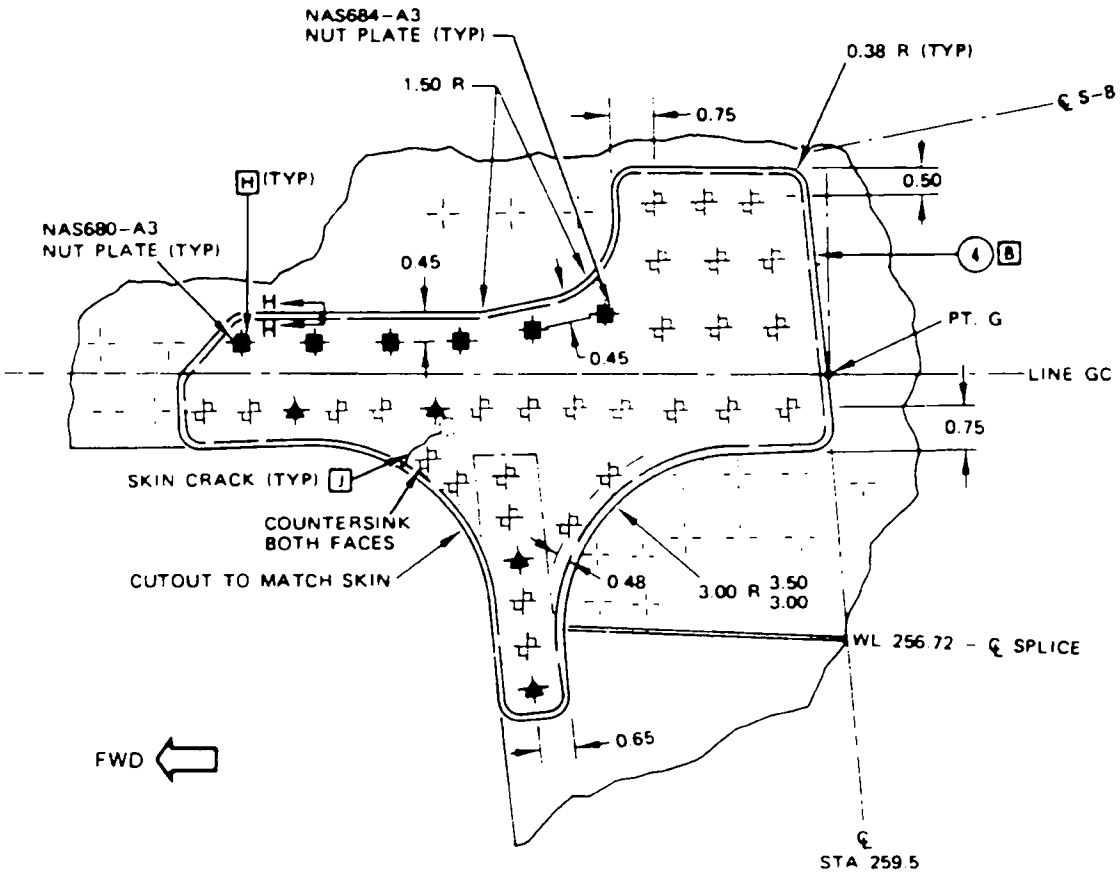

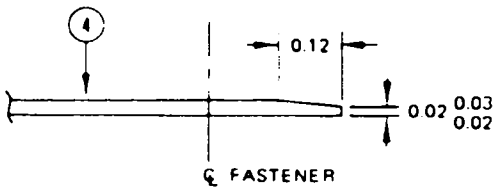

TYPICAL EDGE CHAMFER

SECTION H-H

REPAIR III R

Skin Repairs - Flight Compartment
Figure 11 (Sheet 6)

REPAIR IV ⊡
(DELETED)

Skin Repairs - Flight Compartment
Figure 11 (Sheet 7)

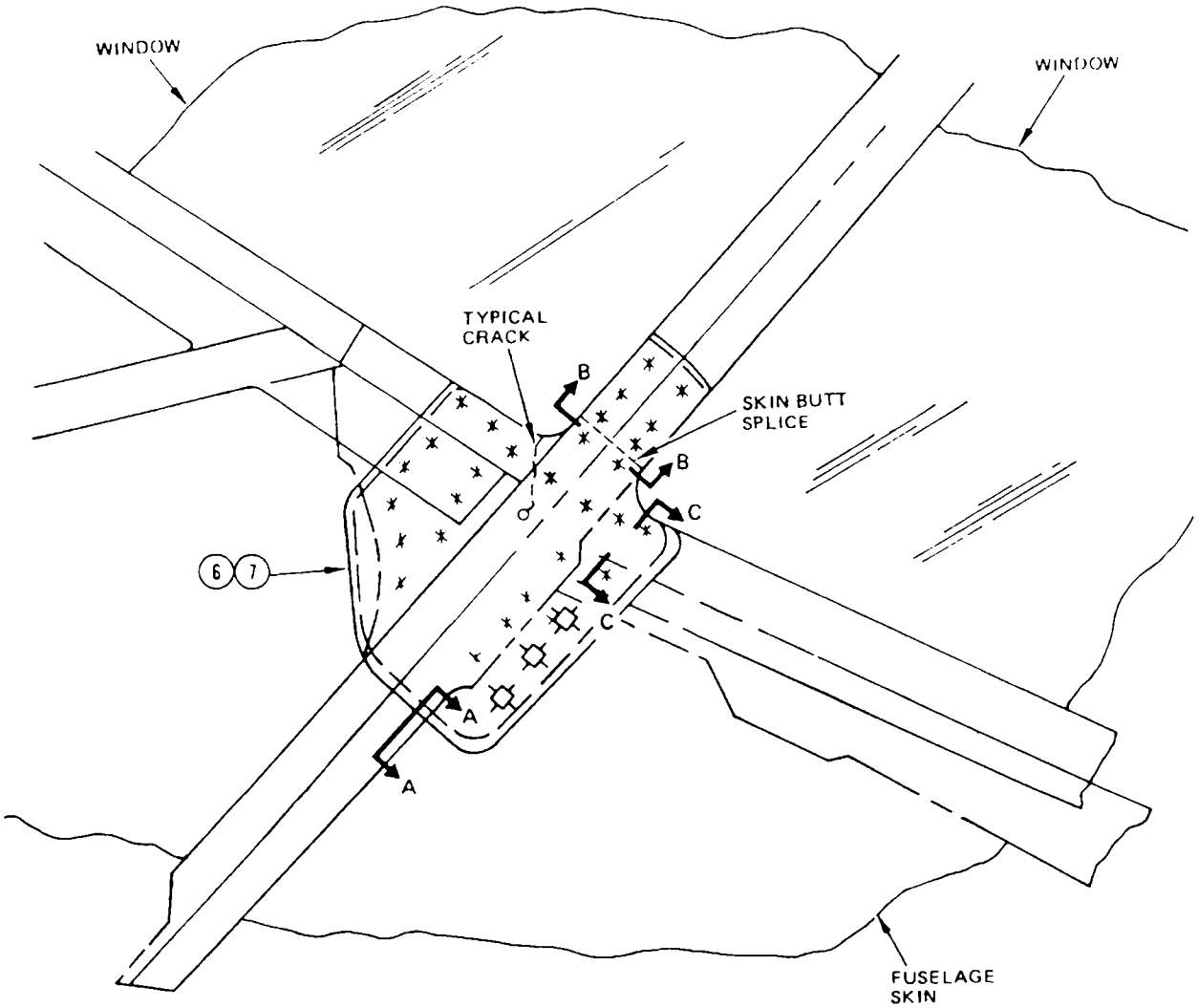

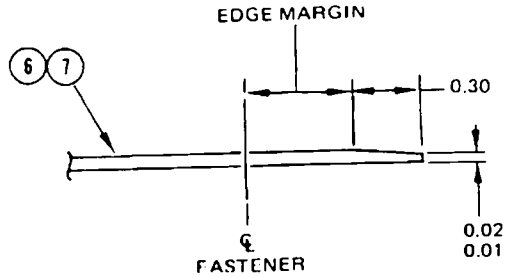

SECTION A-A

REPAIR V [T]

Skin Repairs - Flight Compartment
Figure 11 (Sheet 8)

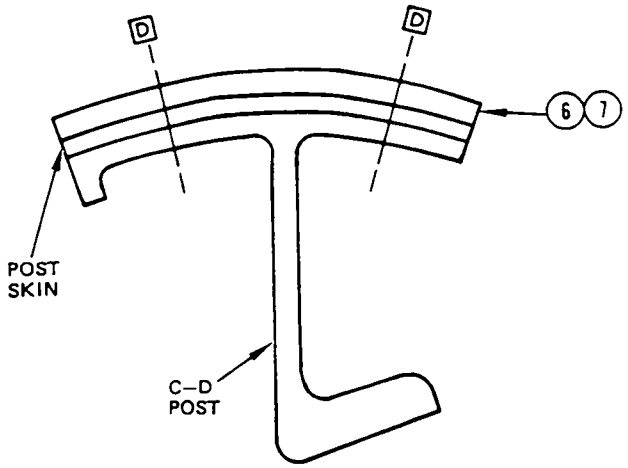

SECTION B–B
(ROTATED)

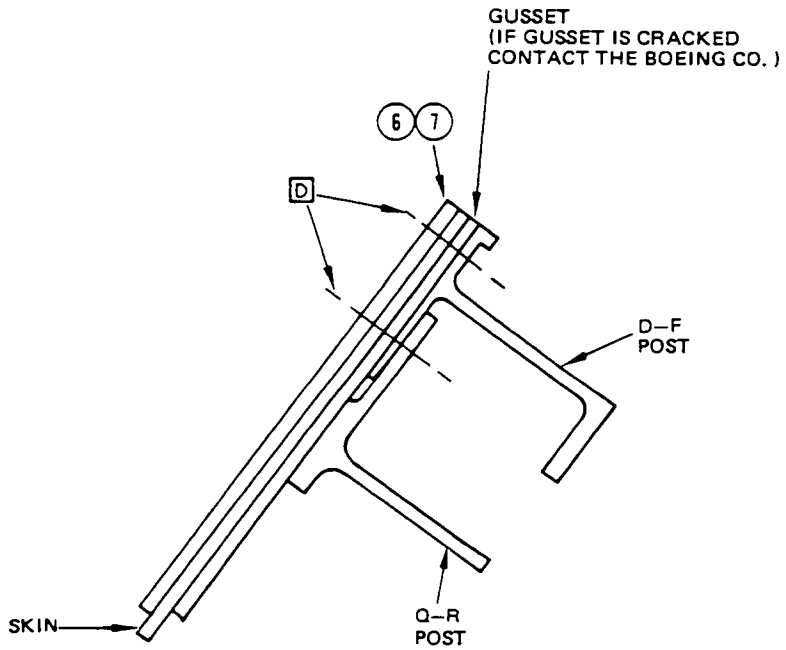

SECTION C–C
(ROTATED)

Skin Repairs - Flight Compartment
Figure 11 (Sheet 9)

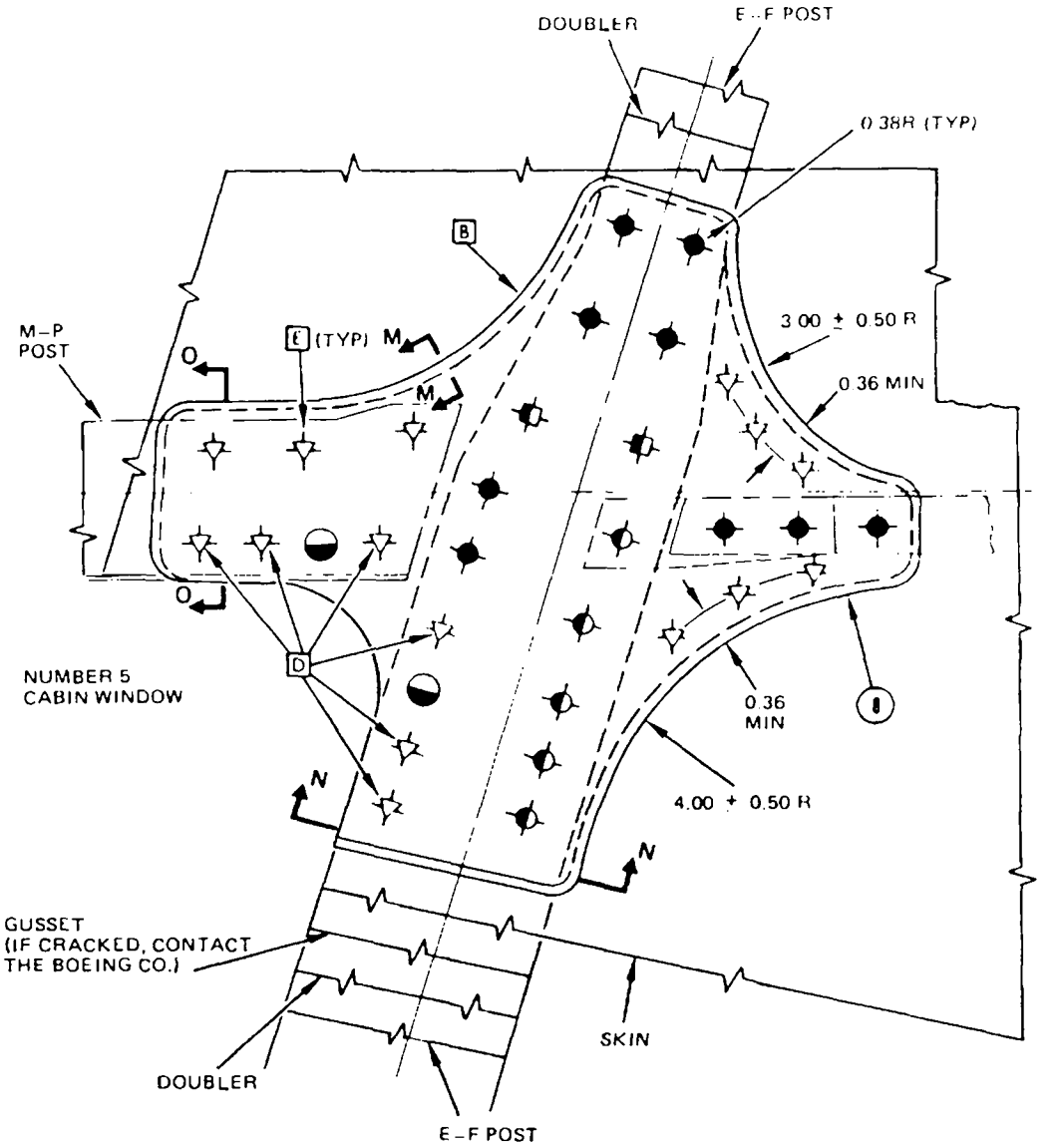

REPAIR VI R

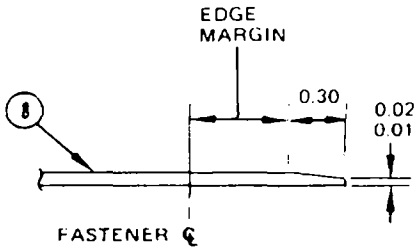

TYPICAL EDGE CHAMFER
SECTION M-M

Skin Repair - Flight Compartment
Figure 11 (Sheet 10)

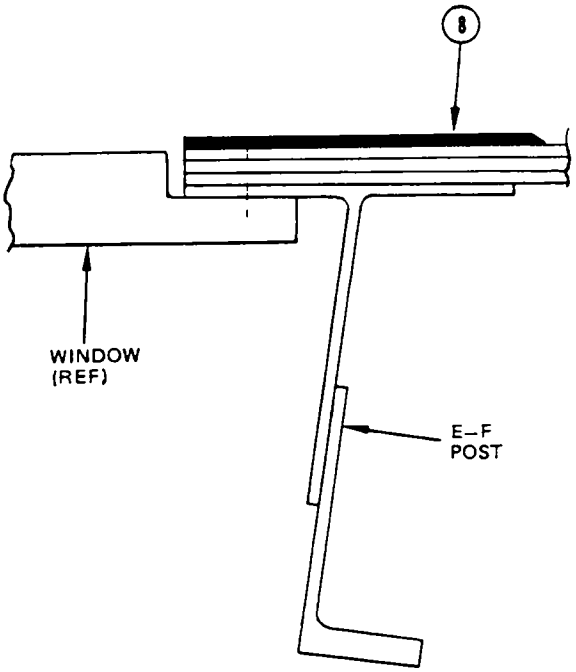

SECTION N–N

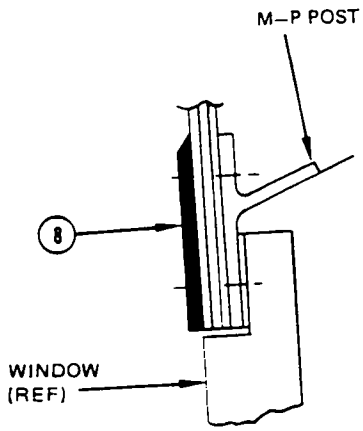

SECTION O–O

Skin Repair - Flight Compartment
Figure 11 (Sheet 11)

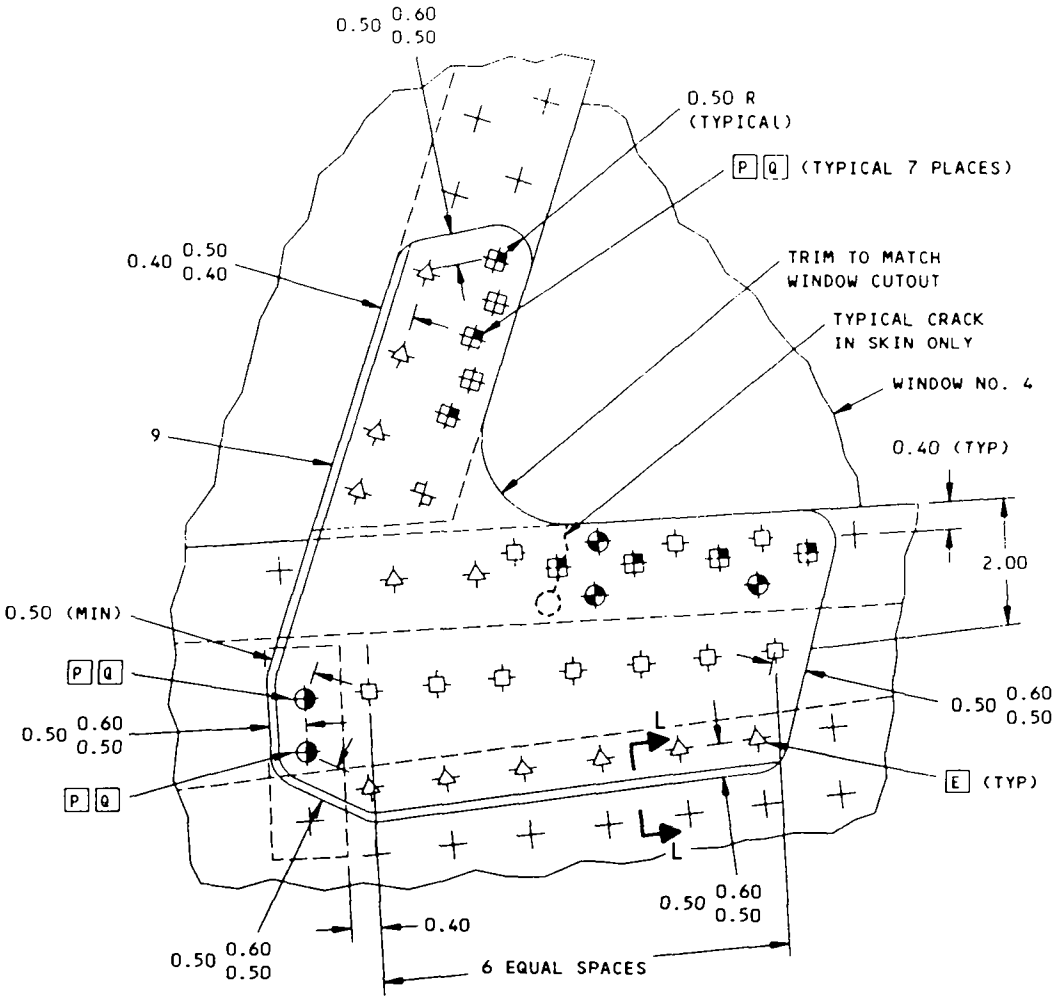

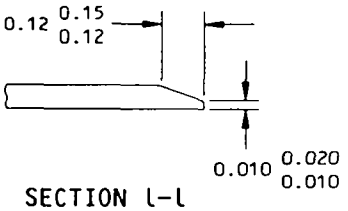

SECTION L-L

REPAIR VII R

Skin Repair - Flight Compartment
Figure 11 (Sheet 12)

APPLICABILITY

THIS REPAIR IS AN ALTERNATE REPAIR FOR THOSE AIRPLANES THAT HAVE GUSSET INSTALLED BETWEEN SKIN AND WINDOW FRAME.

USE THIS REPAIR FOR DAMAGED GUSSET AND SKINS AND CRACKS UP TO 1.50 INCHES IN LENGTH. REFER TO THE BOEING COMPANY SERVICE UNIT FOR REPAIRS TO DAMAGE IN EXCESS OF THIS.

REPAIR INSTRUCTIONS

1. Remove fasteners, windows and all equipment as necessary to gain access for installing repair plates.
2. Locate and drill a 0.25-inch diameter stop hole through the skin and gusset and at least 0.12 inch beyond the end of any crack. Take all necessary precautions to insure none of the underlying structural material is damaged.
3. Make repair plates and bend to match contour of fuselage.
4. Enlarge the original holes affected by this repair except for the window attachment bolts. Locate and drill the required additional and matching holes in the repair plate and fuselage.
5. Alodize the repair plates and holes in skin and structure as detailed in 51-10-2.
6. Install repair washers as detailed in 51-30-8.
7. Install the repair plates, making fay surface seal using BMS 5-95. Install indicated fasteners in close ream holes using BMS 5-95 wet sealant.
8. Refinish.
9. Reinstall window per Maintenance Manual 56-1-41.

NOTES

- THIS IS A CATEGORY A REPAIR. THE INSPECTIONS GIVEN IN THE BASELINE ZONAL INSPECTION (BZI) ARE SUFFICIENT TO MAINTAIN THE DAMAGE TOLERANCE OF THE INITIAL STRUCTURE WITH THIS REPAIR INSTALLED. REFER TO 51-00-6 FOR REPAIR CATEGORIES, BZI DEFINITION AND REPAIR ASSESSMENT INFORMATION.
- THIS REPAIR WILL HAVE AN EFFECT ON THE STRUCTURAL SIGNIFICANT ITEM (SSI) NUMBER F-45A, BUT THE INSPECTION ALTERNATIVES FOR F-45A OF THE SUPPLEMENTAL STRUCTURAL INSPECTION DOCUMENT (SSID) ARE STILL APPLICABLE. DO THIS INSPECTION AT THE SUBSEQUENT SSID INSPECTION ON THIS AIRPLANE. REFER TO SRM 51-00-4, FIGURE 3 FOR THE SSI INFORMATION.
- BREAK SHARP EDGES OF ORIGINAL AND REPAIR PARTS 0.15 TO 0.30
- REMOVE ALL NICKS, SCRATCHES, BURRS, SHARP EDGES AND CORNERS FROM ORIGINAL AND REPAIR PARTS
- ALL DIMENSIONS SHOWN IN INCHES
- REFER TO THE FOLLOWING WHEN USING THIS REPAIR:
  - SRM 51-30-6 FOR FASTENER EDGE MARGINS
  - SRM 51-10-2 FOR PROTECTIVE TREATMENT OF METAL
  - SRM 51-70 FOR AERODYNAMIC SMOOTHNESS REQUIREMENTS
  - SRM 53-30-4 FOR SEALING OF FUSELAGE SKIN REPAIRS
  - AMM 51-21-0 FOR INTERIOR AND EXTERIOR FINISHES
  - AMM 51-31-0 FOR SEALS AND SEALING

[A] MAINTAIN A MINIMUM EDGE THICKNESS OF 0.060 INCH AT EDGES OF REPAIR PLATE (1). TAPER AS INDICATED. SEE 51-70 FOR PERFORMANCE CONSIDERATIONS IN REGIONS OF CRITICAL SMOOTHNESS

[B] MAKE A FAYING SURFACE SEAL AND INSTALL FASTENERS WET WITH BMS 5-95 SEALANT

Alternate Skin Repair - Control Cabin
Figure 11A (Sheet 1)

NOTES (CONT)

[C] 0.025-INCH INCONEL X, AMS 5542, GUSSET INSTALLED BETWEEN THE SKIN AND THE WINDOW FRAME

[D] WHERE HOLES ARE COUNTERSUNK ON BOTH INNER AND OUTER SURFACES OF STRUCTURE, ENLARGE COUNTERSINKS ON INNER SURFACE (AS REQUIRED) TO ACCOMMODATE REPAIR FASTENERS

[E] INSTALL REPAIR WASHERS, AS REQUIRED BY 51-30-8, IN ALL COUNTERSUNK OR DIMPLED HOLES OF ORIGINAL STRUCTURE WHICH WILL BE COVERED BY REPAIR PARTS

[F] FINISH THE LEADING EDGE OF THE REPAIR PLATE, WITHIN THE INDICATED ARC, TO A SURFACE ROUGHNESS EQUIVALENT TO 63 MICRO-INCHES

[G] THESE FASTENERS ARE TO BE INSTALLED ONLY WHEN THE EDGE MARGINS BETWEEN THE DRILLED HOLES AND THE CRACK STOP HOLE ARE NOT LESS THAN D

[H] TAPER TO INDICATED THICKNESS

SYMBOLS

+ ORIGINAL FASTENER LOCATIONS

BACB30FQ6A REPAIR FASTENERS IN EXISTING LOCATIONS. USE OF 1/32 OVERSIZE IS PERMISSIBLE

BACB30LH3 FASTENER IN EXISTING LOCATIONS

BACB30FN6A REPAIR FASTENERS IN NEW LOCATIONS

NAS1200M8-( )P REPAIR FASTENERS IN EXISTING LOCATIONS

NAS1200M6-( )P REPAIR FASTENERS IN EXISTING LOCATIONS

NAS1200M6-( )P REPAIR FASTENERS IN EXISTING LOCATIONS

REPAIR MATERIAL			
	PART	QTY	MATERIAL
1	PLATE	1	0.125-INCH 2024-0 HT-T4
2	PLATE	1	0.050 INCH 301 CRES 1/4 HARD SAME SHAPE AS 1 EXCEPT EXTENDED OUTBD FOR 2 ROWS OF FASTENERS
3	REPAIR WASHER [E]	AS REQD	ALUMINUM ALLOY 2024-T4

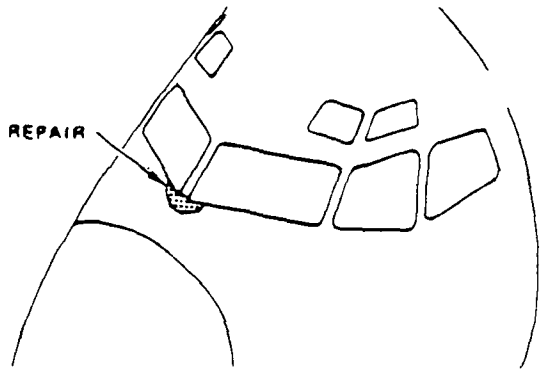

Alternate Skin Repair - Control Cabin
Figure 11A (Sheet 2)

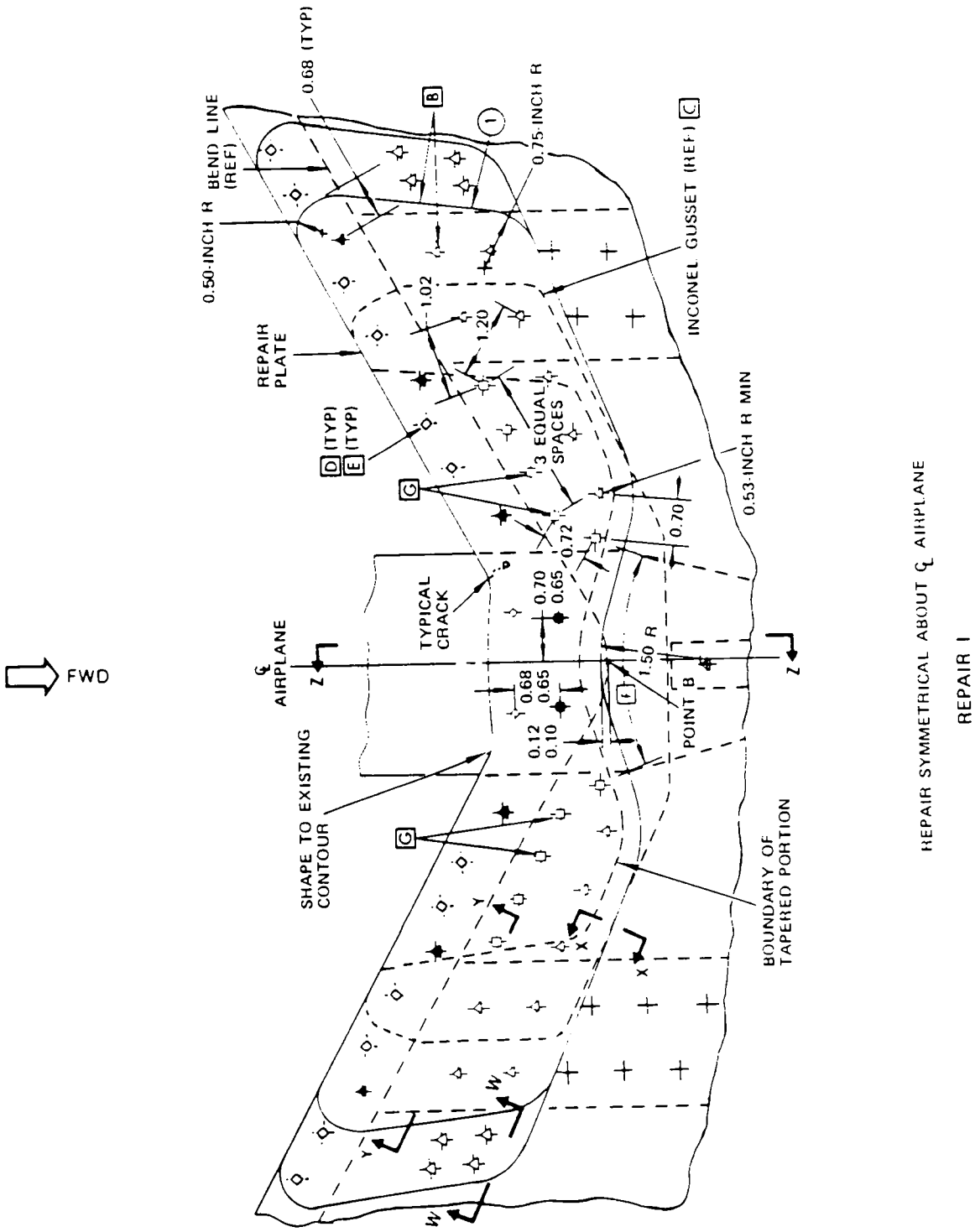

Alternate Skin Repair-Control Cabin
Figure 11A (Sheet 3)

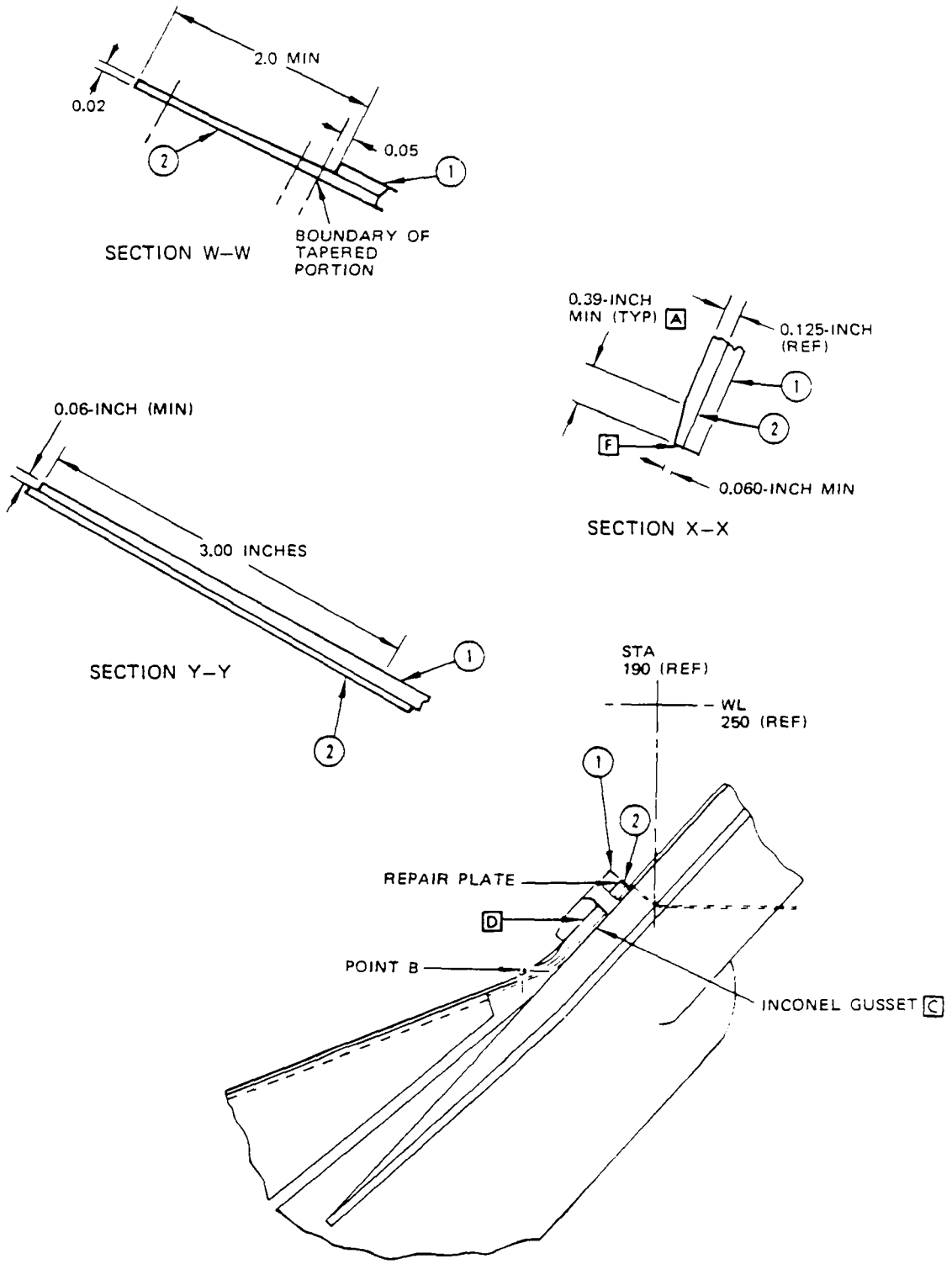

SECTION Z–Z
REPAIR I (CONT)

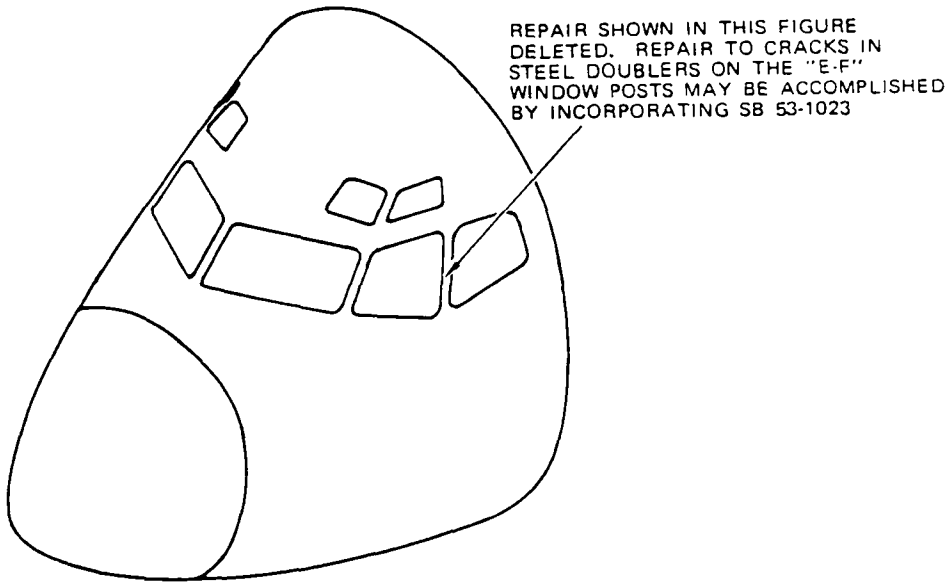

"E-F" Windshield Post - Doubler Repair - Flight Compartment
Figure 12

APPLICABILITY

THE DETAILS I, II AND III OF THIS FIGURE APPLY TO AIRPLANES WITH CUM LINE NUMBERS 1 THRU 291.

SEE FIGURE 15 FOR OTHER REPAIR ALTERNATIVES FOR DAMAGED UPPER AND LOWER SKINS OF A LAP SPLICE. REFER TO SRM 53-10-3, FIGURE 1 FOR STRINGER REPAIR.

REPAIR INSTRUCTIONS

1. Remove the fasteners from the longitudinal lap splice as necessary.
2. Tape a stainless steel sheet approximately 0.025 thick to the fuselage skin below the damage as shown in SRM 51-40-5, Figure 2.
3. Carefully drive nylon or hardwood wedges between the upper and lower skins of the splice as shown in SRM 51-40-5, Figure 2.
4. Separate the resin bonded doublers from the damaged skins using the methods as detailed in SRM 51-40-5.
5. Insert a sheet metal guard between the skin and doubler. Carefully make the cutout as shown in Detail I, II or III.
6. Make repair parts as given in Table I and shown in Detail I, II or III as applicable. Make the surface contour of the repair parts the same as the surface contour of the skin panel.
7. Assemble the repair parts.
8. Drill the fastener holes.

   NOTE: If there are more than three initial fastener holes, one after another, in one of the critical fastener rows, these holes can be zero-timed. Zero-timing will make the inspection threshold start from the time the repair was installed. Refer to paragraph "Hole Preparation for Repairs" in SRM 51-10-1 for the zero-timing procedure.
9. Disassemble the repair parts.
10. Remove the nicks, scratches, gouges, burrs and sharp edges from the repair parts and the initial skins.
11. Apply a chemical conversion coating to the repair parts and the cut edges of the initial skins. Refer to SRM 51-10-2.
12. Apply one layer of BMS 10-79, Type II or III primer to the repair parts and the cut edges of the initial skins. Refer to SOPM 20-44-04.
13. Install countersunk repair washers in the initial holes in skins. Refer to SRM 51-30-8.
14. Install the repair parts with BMS 5-95 sealant between the mating surfaces. Refer to SRM 53-30-4.
15. Install the fasteners given in Table II.
16. Apply a fillet seal with BMS 5-95 sealant along the edges of the repair parts. Refer to SRM 51-20-4.
17. Apply the finish to the repair area. Refer to AMM 51-21.
18. Apply corrosion inhibiting compound on the internal surfaces. Refer to SRM 51-10-2.

Fuselage Skin, Longitudinal Lap Splices -
External Repairs for Damaged Upper and Lower Skins
Figure 13 (Sheet 1)

BOEING PROPRIETARY - Copyright © - Unpublished Work - See title page for details.

NOTES

- THE SOLID RIVET REPAIR IS CATEGORY A AND NO SUPPLEMENTAL INSPECTIONS ARE NECESSARY IF CONDITION 1, 2 OR 3 IS MET.

  1. a) THE CRITICAL FASTENER ROWS IN THE SKIN, DOUBLER OR TEARSTRAP CAN BE VISUALLY INSPECTED FROM THE INSIDE

     b) THE BASE SKIN THICKNESS IS EQUAL TO OR GREATER THAN 0.056 INCH

     c) THE REPAIR IS NOT WITHIN 10 INCHES OF A CUTOUT.

  2. a) THE LENGTH AND WIDTH OF THE REPAIR SPLICE PLATE IS LESS THAN OR EQUAL TO 12 INCHES

     b) THE CRITICAL FASTENER ROWS IN THE SKIN, DOUBLER OR TEARSTRAP CAN BE VISUALLY INSPECTED FROM THE INSIDE

     c) NO OTHER REPAIR SPLICE PLATE IS INSTALLED WITHIN 3 INCHES IN EITHER DIRECTION

     d) THE REPAIR IS NOT WITHIN 10 INCHES OF A CUTOUT.

  3. a) THE LENGTH OF THE REPAIR SPLICE PLATE, IN THE LONGITUDINAL DIRECTION, IS LESS THAN OR EQUAL TO 12 INCHES

     b) THE REPAIR SPLICE PLATE IS LOCATED BELOW S-10L OR S-10R

     c) THE CRITICAL FASTENER ROWS IN THE SKIN, DOUBLER OR TEARSTRAP CAN BE VISUALLY INSPECTED FROM THE INSIDE

     d) NO OTHER REPAIR SPLICE PLATE IS INSTALLED WITHIN 3 INCHES IN THE LONGITUDINAL DIRECTION

     e) THE REPAIR IS NOT WITHIN 10 INCHES OF A CUTOUT.

  IF THIS REPAIR IS NOT CATEGORY A, THEN IT IS CATEGORY B. THE CATEGORY B REPAIR HAS FAA APPROVAL IF YOU DO THE SUPPLEMENTAL INSPECTIONS GIVEN IN THE REPAIR ASSESSMENT PROGRAM. THE DAMAGE TOLERANCE ASSESSMENT OF THE REPAIR CAN BE DONE WITHIN THE TIME LIMIT SPECIFIED IN THE REPAIR ASSESSMENT PROGRAM AFTER YOU RELEASE THE AIRCRAFT TO SERVICE. REFER TO SRM 51-00-6 FOR GENERAL DATA ABOUT THE REPAIR ASSESSMENT PROGRAM. REFER TO TABLE III FOR INSPECTION REQUIREMENTS. SEE DETAIL IV OR DETAIL V FOR THE INSPECTION AREA.

- THESE REPAIRS (DETAIL I THROUGH III) WILL HAVE AN EFFECT ON THE STRUCTURAL SIGNIFICANT ITEM (SSI):

  - NUMBER F-38A THROUGH F-38G, WHEN DETAIL I IS INSTALLED IN THE CROWN AREA, BETWEEN STRINGERS S-10L AND S-10R; BUT, THE INSPECTION ALTERNATIVES FOR F-38A THROUGH F-38G ARE STILL APPLICABLE
  - NUMBER F-48, BUT THE INTERNAL INSPECTION ALTERNATIVES FOR F-48A THROUGH F-48C ARE STILL APPLICABLE
  - NUMBER F-41 WHEN INSTALLED UNDER THE WING-TO-BODY AND LOWER LOBE FAIRINGS, BUT THE INTERNAL INSPECTION ALTERNATIVES ARE STILL APPLICABLE.

  THEREFORE, NO NEW INSPECTION ALTERNATIVES ARE NECESSARY FOR THESE REPAIRS. DO THE INSPECTIONS FOR F-38, F-41 AND F-48, IF NECESSARY, AT THE SUBSEQUENT SUPPLEMENTAL STRUCTURAL INSPECTION DOCUMENT (SSID) INSPECTION ON THIS AIRPLANE. REFER TO SRM 51-00-4, FIGURE 3 FOR THE APPLICABLE SSI INFORMATION.

- REFER TO THE FOLLOWING WHEN MAKING THIS REPAIR:

  - AMM 51-21 FOR INTERIOR AND EXTERIOR FINISHES
  - SOPM 20-44-04 FOR APPLICATION OF CORROSION RESISTANT PRIMER
  - SRM 51-00-6 FOR REPAIR CATEGORIES, DEFINITIONS AND REPAIR ASSESSMENT PROGRAM INFORMATION
  - SRM 51-10-1 FOR DAMAGE CLASSIFICATION AND ZERO-TIMING PROCEDURE
  - SRM 51-10-2 FOR PROTECTIVE TREATMENT OF METALS
  - SRM 51-20-4 FOR REPAIR SEALING
  - SRM 51-30 FOR FASTENER CODE, REMOVAL AND INSTALLATION, HOLE SIZES, EDGE MARGINS AND SUBSTITUTION
  - SRM 51-40-5 FOR REPAIR OF BONDED METAL STRUCTURE
  - SRM 51-70 FOR AERODYNAMIC SMOOTHNESS
  - SRM 53-30-4 FOR SEALING OF LAP SPLICES.

Fuselage Skin, Longitudinal Lap Splices -
External Repairs for Damaged Upper and Lower Skins
Figure 13 (Sheet 2)

BOEING PROPRIETARY - Copyright © - Unpublished Work - See title page for details.

NOTES (CONT)

[A] SAME MATERIAL AND HEAT-TREAT BUT ONE GAGE THICKER THAN ORIGINAL SKIN. REFER TO 51-20-1, FIG. 2, FOR LIST OF AVAILABLE SHEET METAL GAGES.

[B] SAME GAGE AS THE UPPER SKIN OF SPLICE.

[C] SAME GAGE AS THE LOWER SKIN OF SPLICE.

[D] IF POSSIBLE, EXTEND THE REPAIR SPLICE PLATE AN ADDITIONAL ROW PAST THE INITIAL ROWS OF INTERNAL STRUCTURE. IF THE SPLICE PLATE ENDS ON THE INTERNAL STRUCTURE, THE REPAIR IS CATEGORY B. [K]

NOTE: INTERNAL STRUCTURE INCLUDES STRINGERS, FRAMES, INTERCOSTALS, REINFORCING STRAPS OR OTHER STRUCTURE THAT IS ATTACHED TO THE SKIN WITH FASTENERS.

[E] KEEP THE SPECIFIED RADII FOR REPAIR PARTS. DO NOT DECREASE THE FASTENER EDGE MARGIN BELOW THE MINIMUM.

[F] INSTALL REPAIR WASHERS AT THE INITIAL FASTENER LOCATIONS AS GIVEN IN SRM 51-30-8.

[G] WHERE THE INITIAL FASTENER HOLES HAVE BEEN DAMAGED OR ENLARGED, REPLACE WITH 1/32 INCH OVERSIZE REPAIR FASTENERS.

[H] REFER TO OPERATOR'S REPAIR ASSESSMENT GUIDELINES FOR THE REPEAT INSPECTION INTERVAL AND METHOD ALTERNATIVES.

[I] MAKE THE FASTENER SPACING THE SAME AS THE INITIAL LAP SPLICE FASTENER SPACING.

[J] MAKE THE FASTENER SPACING TWO TIMES THE INITIAL LAP SPLICE FASTENER SPACING.

[K] IF THE CRITICAL FASTENER ROWS HAVE THREE OR LESS INITIAL FASTENER HOLES, IN A SEQUENCE, THE INSPECTION THRESHOLD IS THE LATER OF:

- THE INITIAL SCHEDULED INSPECTION AS GIVEN IN THE OPERATOR'S REPAIR ASSESSMENT PROGRAM (RAP)
- 60,000 FLIGHT CYCLES AFTER THE REPAIR WAS INSTALLED.

IF ONE OR MORE OF THE CRITICAL FASTENER ROWS HAS MORE THAN THREE INITIAL FASTENER HOLES, IN A SEQUENCE, THE INSPECTION THRESHOLD IS THE LATER OF:

- THE INITIAL SCHEDULED INSPECTION AS GIVEN IN THE OPERATOR'S REPAIR ASSESSMENT PROGRAM (RAP)
- 60,000 FLIGHT CYCLES AFTER THE REPAIR WAS INSTALLED, IF THE INITIAL FASTENER HOLES HAVE BEEN ZERO-TIMED
- 4,000 FLIGHT CYCLES AFTER THE REPAIR WAS INSTALLED, IF THE INITIAL FASTENER HOLES HAVE NOT BEEN ZERO-TIMED.

[L] THIS REPAIR AT STRINGER S-14 AND STA 360 IS ONLY APPLICABLE IF THERE IS NO CUTOUT IN THE REPAIR AREA. FOR REPAIRS IN THE AREA OF A CUTOUT CONTACT BOEING.

FASTENER SYMBOLS

REFERENCE FASTENER LOCATION

INITIAL FASTENER LOCATION. SEE TABLE II FOR FASTENER TYPE

REPAIR FASTENER LOCATION. SEE TABLE II FOR FASTENER TYPE

INITIAL FASTENER LOCATION. SEE TABLE II FOR FASTENER TYPE. [K]

REPAIR MATERIAL			
PART		QTY	MATERIAL
1	SPLICE PLATE	1	[A]
2	FILLER	1	CLAD 2024-T3 [C]
3	STRUCTURAL FILLER	1	CLAD 2024-T3 [B]
4	FILLER	AS NECESSARY	CLAD 2024-T3 [C]

TABLE I

FASTENERS		
INITIAL FASTENER	INITIAL AND REPAIR FASTENER LOCATIONS [G]	
	RECOMMENDED	ALTERNATIVE
BACR15CE5D	BACR15BB5D	MS20470D5
BACR15CE6D	BACR15BB6D	MS20470D6

TABLE II

Fuselage Skin, Longitudinal Lap Splices -
External Repairs for Damaged Upper and Lower Skins
Figure 13 (Sheet 3)

K12753

BOEING PROPRIETARY - Copyright © - Unpublished Work - See title page for details.

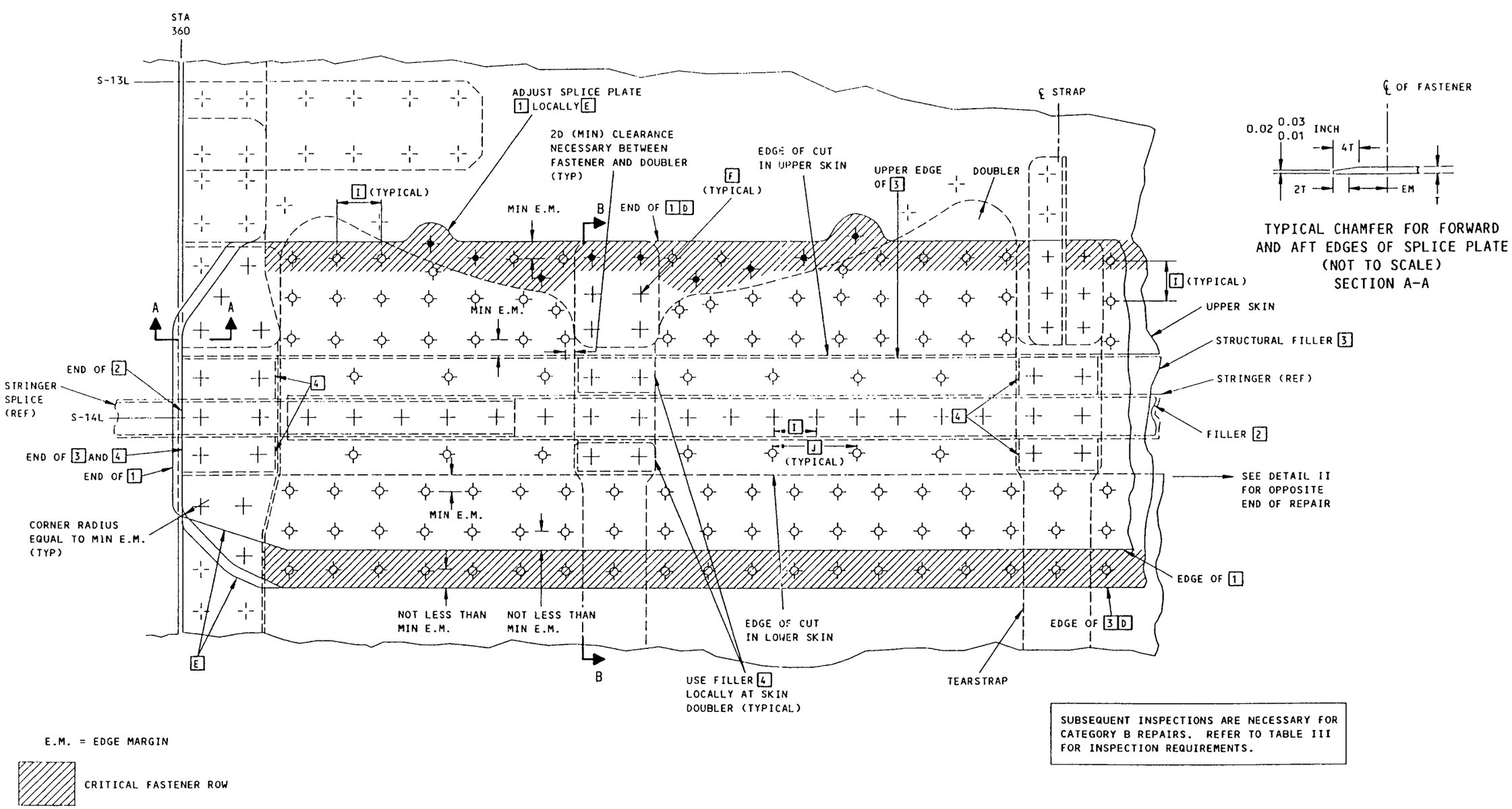

TYPICAL REPAIR AT END OF LAP SPLICE AT FRAME L
(VIEW AT FUSELAGE STA. 360 AND STRINGER S-14
ADJUST AS NECESSARY FOR OTHER LOCATIONS)
DETAIL I

Fuselage Skin, Longitudinal Lap Splices -
External Repairs for Damaged Upper and Lower Skins
Figure 13 (Sheet 4)

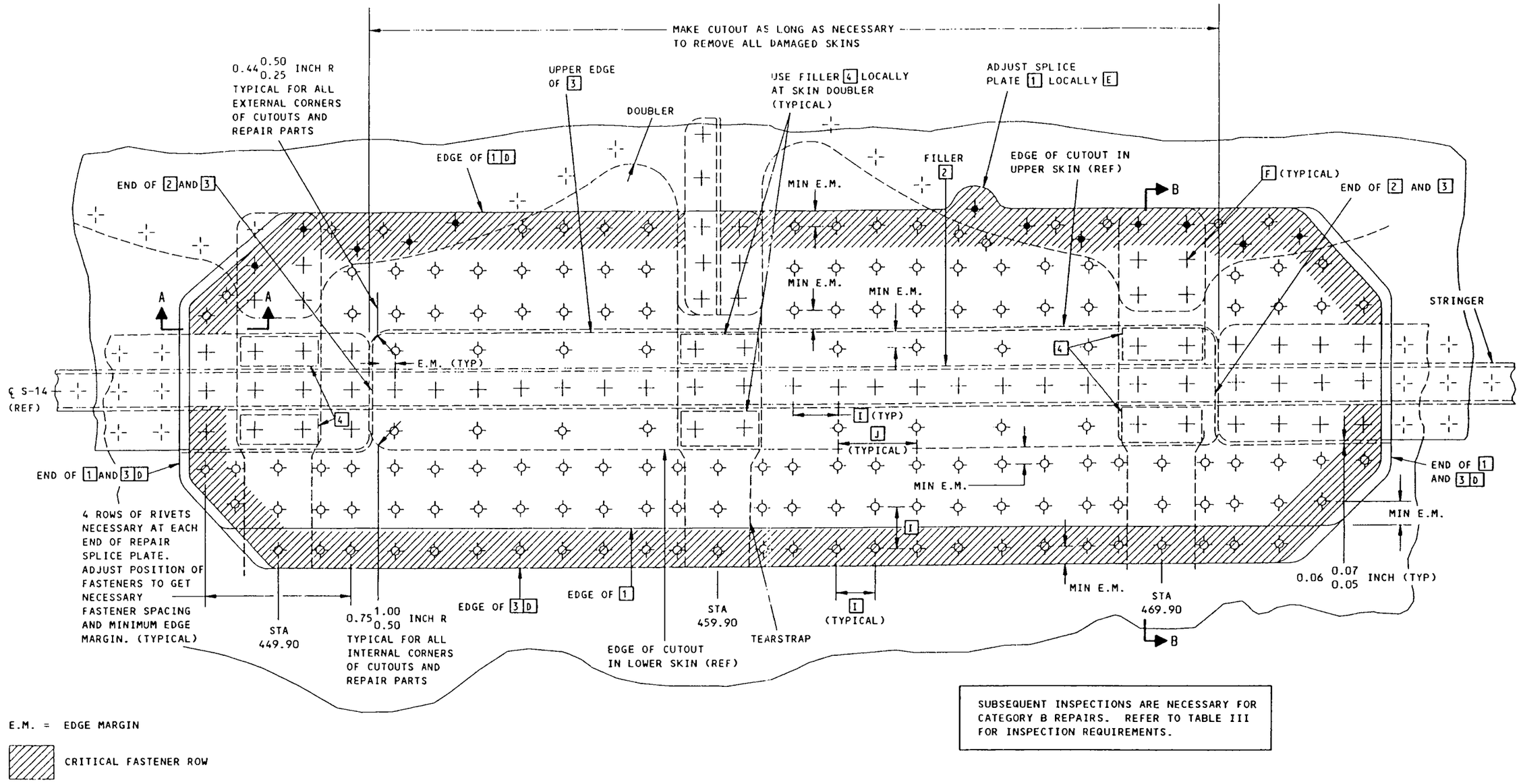

TYPICAL REPAIR ACROSS A FRAME, LOWER BODY S-14L TO S-14R
(VIEW ON STRINGER S-14L SHOWS A REPAIR FROM
FUS. STA 449.90 TO STA 469.90. ADJUST AS NECESSARY
FOR OTHER LOCATIONS)
DETAIL II

Fuselage Skin, Longitudinal Lap Splices -
External Repairs for Damaged Upper and Lower Skins
Figure 13 (Sheet 5)

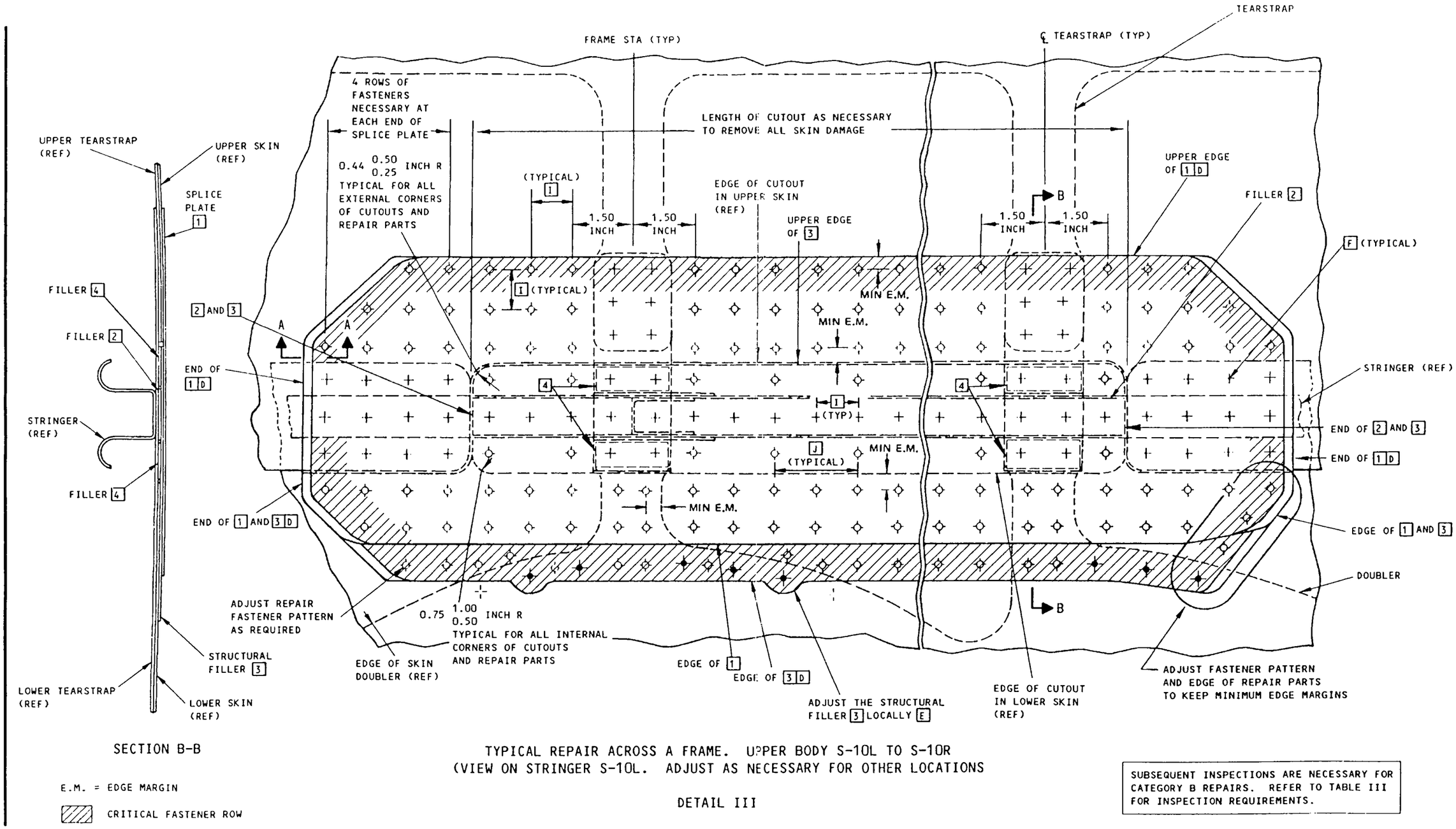

SECTION B-B

TYPICAL REPAIR ACROSS A FRAME. UPPER BODY S-10L TO S-10R
(VIEW ON STRINGER S-10L. ADJUST AS NECESSARY FOR OTHER LOCATIONS

DETAIL III

E.M. = EDGE MARGIN

CRITICAL FASTENER ROW

SUBSEQUENT INSPECTIONS ARE NECESSARY FOR CATEGORY B REPAIRS. REFER TO TABLE III FOR INSPECTION REQUIREMENTS.

Fuselage Skin, Longitudinal Lap Splices - External Repairs
for Damaged Upper and Lower Skins
Figure 13 (Sheet 6)

CATEGORY B REPAIR INSPECTION REQUIREMENTS		
INSPECTION THRESHOLD	REPEAT INSPECTION ALTERNATIVES	
	METHOD	INTERVAL
K	H	H
NOTE: Inspect the skin, doubler or tearstrap around the first row of fasteners along the edge of the splice plate and structural filler. See Detail IV or V as applicable.		

TABLE III

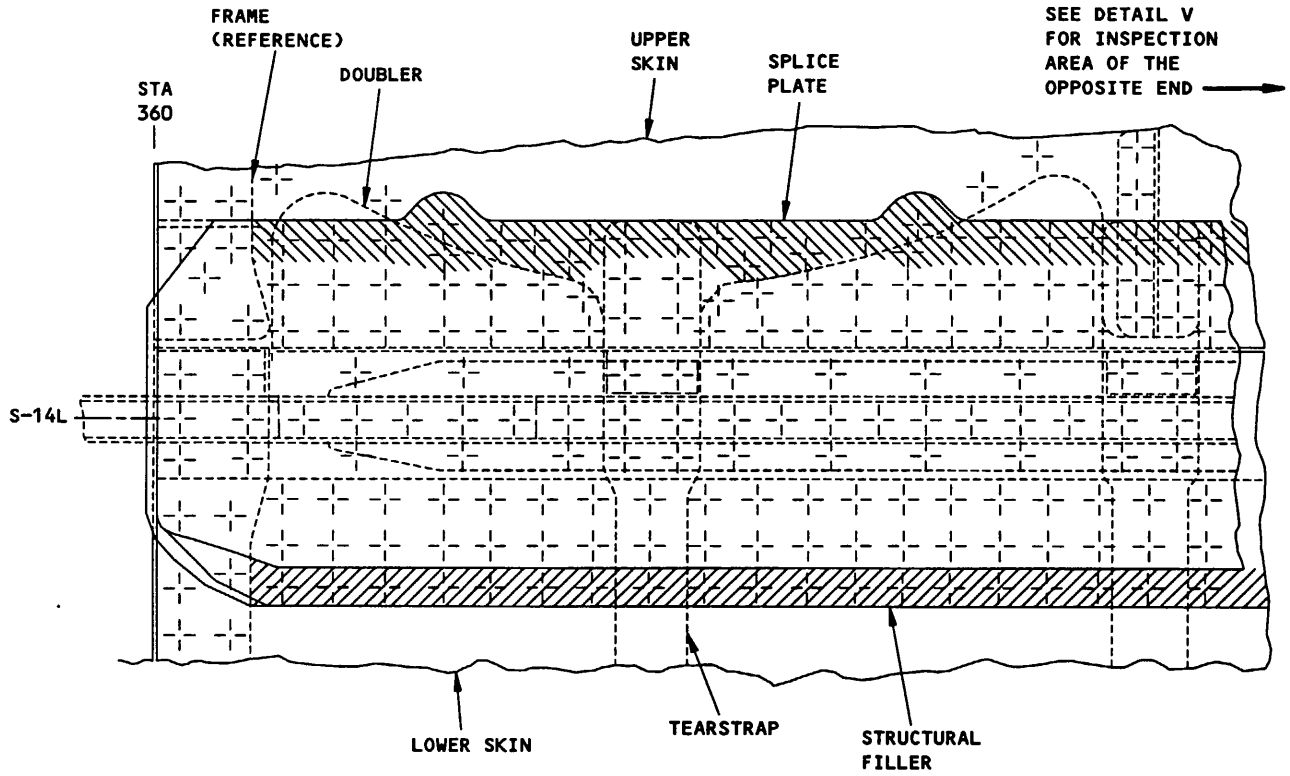

DETAIL IV

LOWER SKIN, DOUBLER OR TEARSTRAP INSPECTION AREA FOR ALL INSPECTION METHODS TYPICAL FOR DETAIL I

UPPER SKIN, DOUBLER OR TEARSTRAP INSPECTION AREA FOR ALL INSPECTION METHODS TYPICAL FOR DETAIL I

Fuselage Skin, Longitudinal Lap Splices -
External Repairs for Damaged Upper and Lower Skins
Figure 13 (Sheet 7)

K12768

BOEING PROPRIETARY - Copyright © - Unpublished Work - See title page for details.

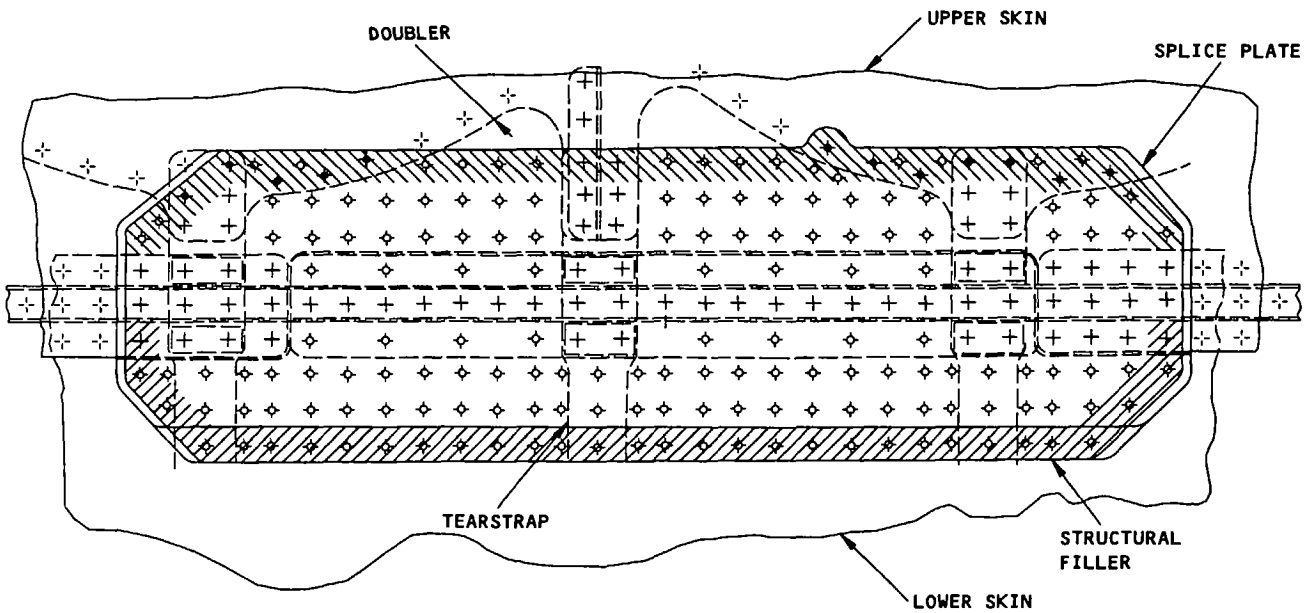

DETAIL II IS SHOWN, DETAIL III IS SIMILAR
DETAIL V

LOWER SKIN, DOUBLER OR TEARSTRAP INSPECTION AREA FOR ALL INSPECTION METHODS TYPICAL FOR DETAILS II AND III

UPPER SKIN, DOUBLER OR TEARSTRAP INSPECTION AREA FOR ALL INSPECTION METHODS TYPICAL FOR DETAILS II AND III

Fuselage Skin, Longitudinal Lap Splice - External Repairs
for Damaged Upper and Lower Skins
Figure 13 (Sheet 8)

BOEING PROPRIETARY - Copyright © - Unpublished Work - See title page for details.

REPAIR INSTRUCTIONS

1. Remove the shear tie fasteners from the skin and trim off the existing flange of the frame shear tie as shown. Remove the four lower fasteners of the skin lap.
2. Cut a 1.38 diameter hole through the skin and doubler to remove the damage.
3. Make the repair parts.
4. Assemble the repair parts and drill the fastener holes.
5. Remove the repair parts.
6. Break sharp edges of original and repair parts 0.015 R to 0.030 R.
7. Remove all nicks, scratches, burrs, sharp edges and corners from original and repair parts.
8. Apply Alodine to the repair parts and the cut edges of the original parts per 51-10-2.
9. Apply one coat of BMS 10-11, Type I primer to repair parts and the cut edges of the original parts per 51-21 of the Maintenance Manual.
10. Install the repair parts making a faying surface seal with BMS 5-95 sealant. Install fasteners wet with BMS 5-95 sealant.
11. Fill the gap between the patch and skin with aerodynamic smoother BMS 5-79.
12. Restore original finish per 51-21 of the Maintenance Manual.

NOTES

- THIS IS A CATEGORY A REPAIR. THE INSPECTIONS GIVEN IN THE BASELINE ZONAL INSPECTION (BZI) ARE SUFFICIENT TO MAINTAIN THE DAMAGE TOLERANCE OF THE INITIAL STRUCTURE WITH THIS REPAIR INSTALLED. REFER TO 51-00-6 FOR REPAIR CATEGORIES, BZI DEFINITION AND REPAIR ASSESSMENT INFORMATION.
- THIS REPAIR WILL HAVE AN EFFECT ON THE STRUCTURAL SIGNIFICANT ITEM (SSI):
  - NUMBER F-48, WHEN INSTALLED AT THE JUNCTION OF FRAME AND SKIN LAP SPLICE; BUT, THE EXTERNAL INSPECTION ALTERNATIVES FOR F-48A THROUGH F-48C ARE STILL APPLICABLE
  - NUMBER F-41 WHEN INSTALLED UNDER THE WING-TO-BODY AND LOWER LOBE FAIRINGS, BUT THE INSPECTION ALTERNATIVES ARE STILL APPLICABLE.

  THEREFORE, NO NEW INSPECTION ALTERNATIVES ARE NECESSARY FOR THIS REPAIR. DO THE INSPECTIONS FOR F-41 AND F-48, IF NECESSARY, AT THE SUBSEQUENT SUPPLEMENTAL STRUCTURAL INSPECTION DOCUMENT (SSID) INSPECTION ON THIS AIRPLANE. REFER TO SRM 51-00-4, FIGURE 3 FOR THE APPLICABLE SSI INFORMATION.
- REPAIR SHOWN AT JUNCTION OF FRAME AND SKIN LAP SPLICE. ADJUST FASTENER SPACING AS NECESSARY FOR DAMAGE AT OTHER LOCATIONS
- BREAK ALL SHARP EDGES 0.015 TO 0.005 RADIUS
- REFER TO THE FOLLOWING WHEN USING THIS REPAIR:
  - SRM 51-10-1 FOR INVESTIGATION AND CLEANUP OF DAMAGE
  - SRM 51-10-2 FOR PROTECTIVE TREATMENT OF METALS
  - SRM 51-20-4 FOR SEALING OF REPAIRS
  - SRM 51-20-4 FOR FAYING SURFACE SEALING OF REPAIRS
  - AMM 51-21 FOR INTERIOR AND EXTERIOR FINISHES
  - AMM 51-21 FOR CORROSION PROTECTIVE FINISHES
  - SRM 51-30 FOR FASTENER CODE, REMOVAL, INSTALLATION, HOLE SIZES AND EDGE MARGINS
  - AMM 51-31 FOR SEALS AND SEALING

[A] SHAPE FILLER TO MATCH LOCATION. GAGE OF FILLER SAME AS SKIN DOUBLER

FASTENER SYMBOLS

+ LOCATION OF ORIGINAL FASTENERS. USE 1/32 OVERSIZE WHERE NECESSARY

REPAIR FASTENER LOCATIONS MS20470D5

REPAIR FASTENER LOCATIONS MS20470D6

OBSOLETE
DO NOT USE AFTER JULY 10, 2003
SEE FIGURE 48 OR FIGURE 49

Flush Repair for Minor Skin Damage at a Frame
Figure 14 (Sheet 1)

BOEING PROPRIETARY - Copyright © - Unpublished Work - See title page for details.

REPAIR MATERIAL			
PART		QTY	MATERIAL
1	ANGLE	1	0.040 CLAD 7075-0 HT TR TO - T6
2	ANGLE	1	0.040 CLAD 7075-0 HT TR TO - T6
3	DOUBLER	1	0.040 CLAD 2024-T3
4	FILLER PATCH	1	0.072 CLAD 2024-T3
5	FILLER	2	2024-T3 A

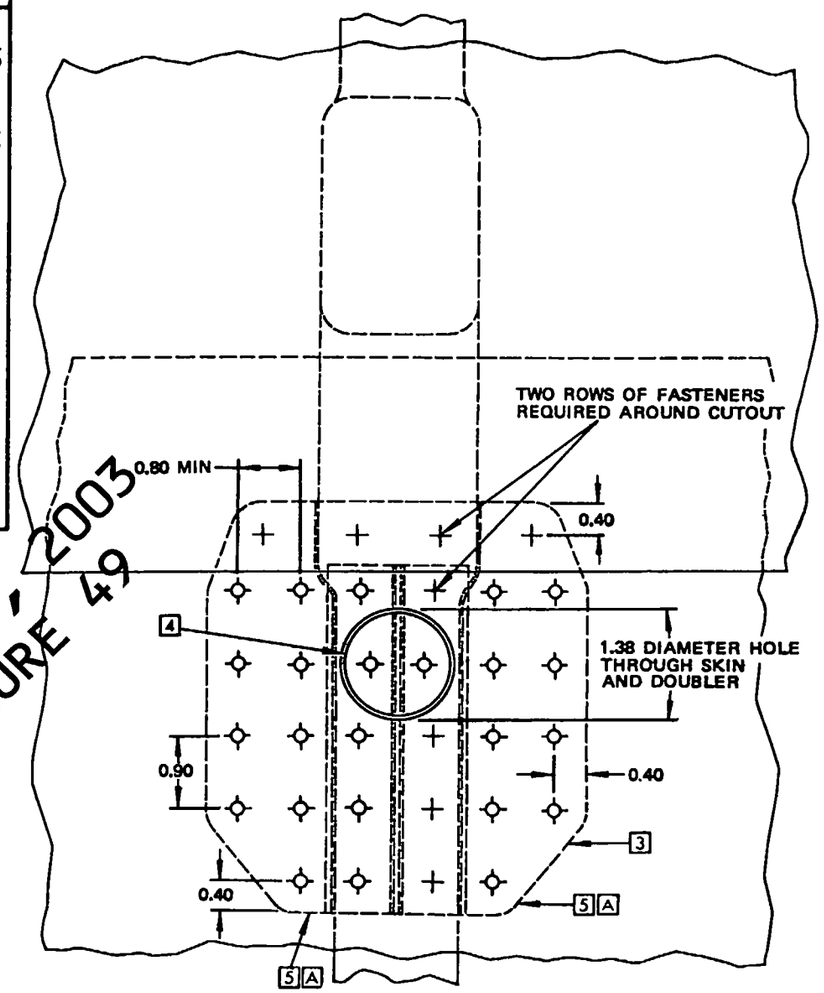

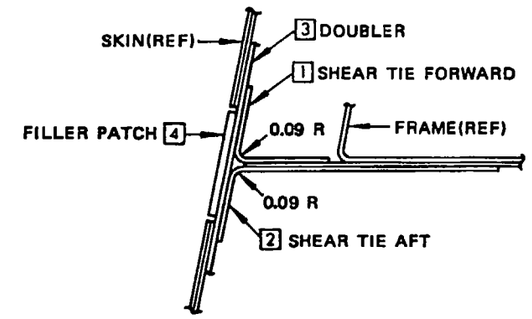

SECTION A–A

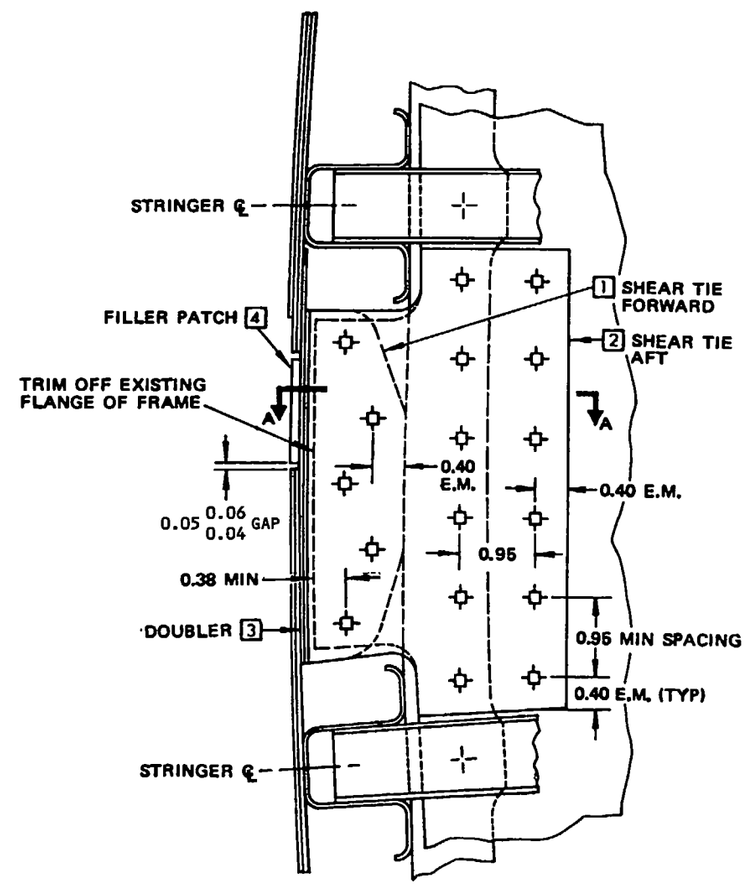

OBSOLETE
DO NOT USE AFTER JULY 10, 2003
SEE FIGURE 48 OR FIGURE 49

Flush Repair for Minor Skin Damage at a Frame
Figure 14 (Sheet 2)

BOEING PROPRIETARY - Copyright © - Unpublished Work - See title page for details.

APPLICABILITY
THIS REPAIR APPLIES TO AIRPLANES WITH CUM LINE NUMBERS 1 THRU 291.
THIS REPAIR CAN BE USED AT ANY LAP SPLICE AREA EXCEPT THOSE GIVEN IN FIGURE 13.
REFER TO SRM 53-10-3, FIGURE 1 FOR STRINGER REPAIR.

REPAIR INSTRUCTIONS

1. Remove the fasteners from the longitudinal lap splice as necessary.
2. Separate the resin bonded tearstraps from the damaged skins using the methods given in SRM 51-40-5.
3. Insert a sheet metal guard between the skin and tearstrap. Carefully make the cutout as shown in Detail I.
4. Make repair parts given in Table I. Make the surface contour of the repair parts the same as the surface contour of the skin panel.
5. Assemble the repair parts. See Detail I.
6. Drill the fastener holes.

   NOTE: If there are more than three initial fastener holes, one after another, in one of the critical fastener rows, these holes can be zero-timed. Zero-timing will make the inspection threshold start from the time the repair was installed. Refer to the paragraph "Hole Preparation for Repairs" in SRM 51-10-1 for the zero-timing procedure.
7. Disassemble the repair parts.
8. Remove the nicks, scratches, gouges, burrs and sharp edges from the repair parts and the initial skins.
9. Apply a chemical conversion coating to the repair parts and to the cut edges of the initial skin. Refer to SRM 51-10-2.
10. Apply one layer of BMS 10-79, Type II or III primer to the repair parts and the cut edges of the skin. Refer to SOPM 20-44-04.
11. Install countersunk repair washers in initial holes in the skins.
12. Install the repair parts with BMS 5-95 sealant between the mating surfaces. Refer to SRM 53-30-4.
13. Install the fasteners given in Table II.
14. Apply a fillet seal with BMS 5-95, sealant along the edges of the repair parts. Refer to SRM 51-20-4.
15. Apply the finish to the repair area. Refer to AMM 51-21.
16. Apply corrosion inhibiting compound on the internal surfaces. Refer to SRM 51-10-2.

OBSOLETE
DO NOT USE AFTER JULY 10, 2003
SEE FIGURE 48 OR FIGURE 49

for Damaged Upper and Lower Skins
Figure 15 (Sheet 1)

BOEING PROPRIETARY - Copyright © - Unpublished Work - See title page for details.

NOTES

- THE SOLID RIVET REPAIR IS CATEGORY A AND NO SUPPLEMENTAL INSPECTIONS ARE NECESSARY IF CONDITION 1, 2 OR 3 IS MET:

  1. a) THE CRITICAL FASTENER ROW IN THE SKIN AND TEARSTRAP CAN BE VISUALLY INSPECTED FROM THE INSIDE

     b) THE BASE SKIN THICKNESS IS EQUAL TO OR GREATER THAN 0.056 INCH

     c) THE REPAIR IS NOT WITHIN 10 INCHES OF A CUTOUT.

  2. a) THE LENGTH AND WIDTH OF THE REPAIR SPLICE PLATE IS LESS THAN OR EQUAL TO 12 INCHES

     b) THE CRITICAL FASTENER ROW IN THE SKIN AND TEARSTRAP CAN BE VISUALLY INSPECTED FROM THE INSIDE

     c) NO OTHER REPAIR SPLICE PLATE IS INSTALLED WITHIN 3 INCHES IN LONGITUDINAL AND CIRCUMFERENTIAL DIRECTIONS

     d) THE REPAIR IS NOT WITHIN 10 INCHES OF A CUTOUT.

  3. a) THE LENGTH OF THE REPAIR SPLICE PLATE, IN THE LONGITUDINAL DIRECTION, IS LESS THAN OR EQUAL TO 12 INCHES

     b) THE REPAIR SPLICE PLATE IS LOCATED BELOW S-10L OR S-10R

     c) THE CRITICAL FASTENER ROW IN THE SKIN AND TEARSTRAP CAN BE VISUALLY INSPECTED FROM THE INSIDE

     d) NO OTHER REPAIR SPLICE PLATE IS INSTALLED WITHIN 3 INCHES IN THE LONGITUDINAL DIRECTION.

     e) THE REPAIR IS NOT WITHIN 10 INCHES OF A CUTOUT.

  IF THIS REPAIR IS NOT CATEGORY A, THEN IT IS CATEGORY B. THE CATEGORY B REPAIR HAS FAA APPROVAL IF YOU DO THE SUPPLEMENTAL INSPECTIONS GIVEN IN THE REPAIR ASSESSMENT PROGRAM. THE DAMAGE TOLERANCE ASSESSMENT OF THE REPAIR CAN BE DONE WITHIN THE TIME LIMIT SPECIFIED IN THE REPAIR ASSESSMENT PROGRAM AFTER YOU RELEASE THE AIRCRAFT TO SERVICE. REFER TO SRM 51-00-6 FOR GENERAL DATA ABOUT THE REPAIR ASSESSMENT PROGRAM. REFER TO TABLE III FOR INSPECTION REQUIREMENTS. SEE DETAIL II FOR THE INSPECTION AREA.

- THIS REPAIR WILL HAVE AN EFFECT ON THE STRUCTURAL SIGNIFICANT ITEM (SSI):

  - NUMBER F-48; BUT, THE INTERNAL INSPECTION ALTERNATIVES FOR F-48A THROUGH F-48D ARE STILL APPLICABLE
  - NUMBER F-41 WHEN INSTALLED UNDER THE WING-TO-BODY AND LOWER LOBE FAIRINGS, BUT THE INTERNAL INSPECTION ALTERNATIVES ARE STILL APPLICABLE.

  THEREFORE, NO NEW INSPECTION ALTERNATIVES ARE NECESSARY FOR THIS REPAIR. DO THE INTERNAL INSPECTIONS FOR F-41 AND F-48, IF NECESSARY, AT THE SUBSEQUENT SUPPLEMENTAL STRUCTURAL INSPECTION DOCUMENT (SSID) INSPECTION ON THIS AIRPLANE. REFER TO SRM 51-00-4, FIGURE 3 FOR THE APPLICABLE SSI INFORMATION.

- REFER TO THE FOLLOWING WHEN MAKING THIS REPAIR.

  - AMM 51-21 FOR INTERIOR AND EXTERIOR FINISHES
  - SOPM 20-44-04 FOR APPLICATION OF CORROSION RESISTANT PRIMER
  - SRM 51-00-6 FOR REPAIR CATEGORIES, DEFINITIONS AND REPAIR ASSESSMENT PROGRAM INFORMATION
  - SRM 51-10-1 FOR DAMAGE CLASSIFICATION AND ZERO-TIMING PROCEDURE
  - SRM 51-10-2 FOR PROTECTIVE TREATMENT OF METALS
  - SRM 51-20-4 FOR REPAIR SEALING
  - SRM 51-30 FOR FASTENER CODE, REMOVAL AND INSTALLATION, HOLE SIZES, EDGE MARGINS AND SUBSTITUTION
  - SRM 51-40-5 FOR REPAIR OF BONDED METAL STRUCTURE
  - SRM 51-70 FOR AERODYNAMIC SMOOTHNESS
  - SRM 53-30-4 FOR SEALING OF LAP SPLICES.

[A] SAME MATERIAL AND HEAT-TREAT, BUT ONE GAGE THICKER THAN THE INITIAL SKIN. REFER TO SRM 51-20-1, FIG. 2, FOR LIST OF AVAILABLE SHEET METAL GAGES.

[B] SAME GAGE AS THE UPPER SKIN OF SPLICE.

[C] SAME GAGE AS THE LOWER SKIN OF SPLICE.

[D] IF POSSIBLE, EXTEND THE SPLICE PLATE AN ADDITIONAL ROW PAST THE INITIAL FASTENER ROWS OF INTERNAL STRUCTURE. IF THE SPLICE PLATE ENDS ON THE INTERNAL STRUCTURE, THEN THE REPAIR IS CATEGORY B. [K]

NOTE: INTERNAL STRUCTURE INCLUDES STRINGERS, FRAMES, INTERCOSTALS, REINFORCING STRAPS OR OTHER STRUCTURE THAT IS ATTACHED TO THE SKIN WITH FASTENERS.

OBSOLETE AFTER JULY 10, 2003
DO NOT USE
SEE FIGURE 16 OR FIGURE 49

Fuselage Skin, Longitudinal Lap Splice - Typical External Repair for Damaged Upper and Lower Skins
Figure 15 (Sheet 2)

BOEING PROPRIETARY - Copyright © - Unpublished Work - See title page for details.

NOTES (CONT)

E KEEP THE SPECIFIED RADII FOR REPAIR PARTS. DO NOT DECREASE THE FASTENER EDGE MARGIN BELOW THE MINIMUM.

F INSTALL REPAIR WASHERS AT THE INITIAL FASTENER LOCATIONS AS GIVEN IN SRM 51-30-8.

G WHERE INITIAL FASTENER HOLES HAVE BEEN DAMAGED OR ENLARGED, REPLACE WITH 1/64 OR 1/32 INCH OVERSIZE REPAIR FASTENERS.

H REFER TO OPERATOR'S REPAIR ASSESSMENT GUIDELINES FOR THE REPEAT INSPECTION INTERVAL AND METHOD ALTERNATIVES.

I MAKE THE FASTENER SPACING THE SAME AS THE INITIAL LAP SPLICE FASTENER SPACING

J MAKE THE FASTENER SPACING TWO TIMES THE INITIAL LAP SPLICE SPACING.

K IF ONE OF THE CRITICAL FASTENER ROWS HAS MORE THAN THREE INITIAL FASTENER HOLES, ONE AFTER ANOTHER, THE THRESHOLD STARTS:

- FROM THE TIME THE REPAIR WAS INSTALLED IF THE HOLES HAVE BEEN ZERO-TIMED
- FROM THE TIME THE AIRPLANE WAS DELIVERED IF THE HOLES HAVE NOT BEEN ZERO-TIMED.

FASTENER SYMBOLS

REFERENCE FASTENER LOCATION

INITIAL FASTENER LOCATION. SEE TABLE II FOR FASTENER TYPE

REPAIR FASTENER LOCATION SEE TABLE II FOR FASTENER TYPE

REPAIR MATERIAL			
PART		QTY	MATERIAL
1	SPLICE PLATE	1	A
2	FILLER	1	CLAD 2024-T3 C
3	STRUCTURAL FILLER	1	CLAD 2024-T3 B
4	FILLER	2	CLAD 2024-T3 C

TABLE I

FASTENERS		
INITIAL FASTENER	INITIAL AND REPAIR FASTENER LOCATIONS G	
	RECOMMENDED	ALTERNATIVE
BACR15CE5D	BACR15BB5D	MS20470D5
BACR15CE6D	BACR15BB6D	MS20470D6

TABLE II

DO NOT USE AFTER JULY 10, 2003
OBSOLETE
SEE FIGURE 48 OR FIGURE 49

Fuselage Skin, Longitudinal Lap Splice - Typical External Repair for Damage Upper and Lower Skins
Figure 15 (Sheet 3)

BOEING PROPRIETARY - Copyright © - Unpublished Work - See title page for details.

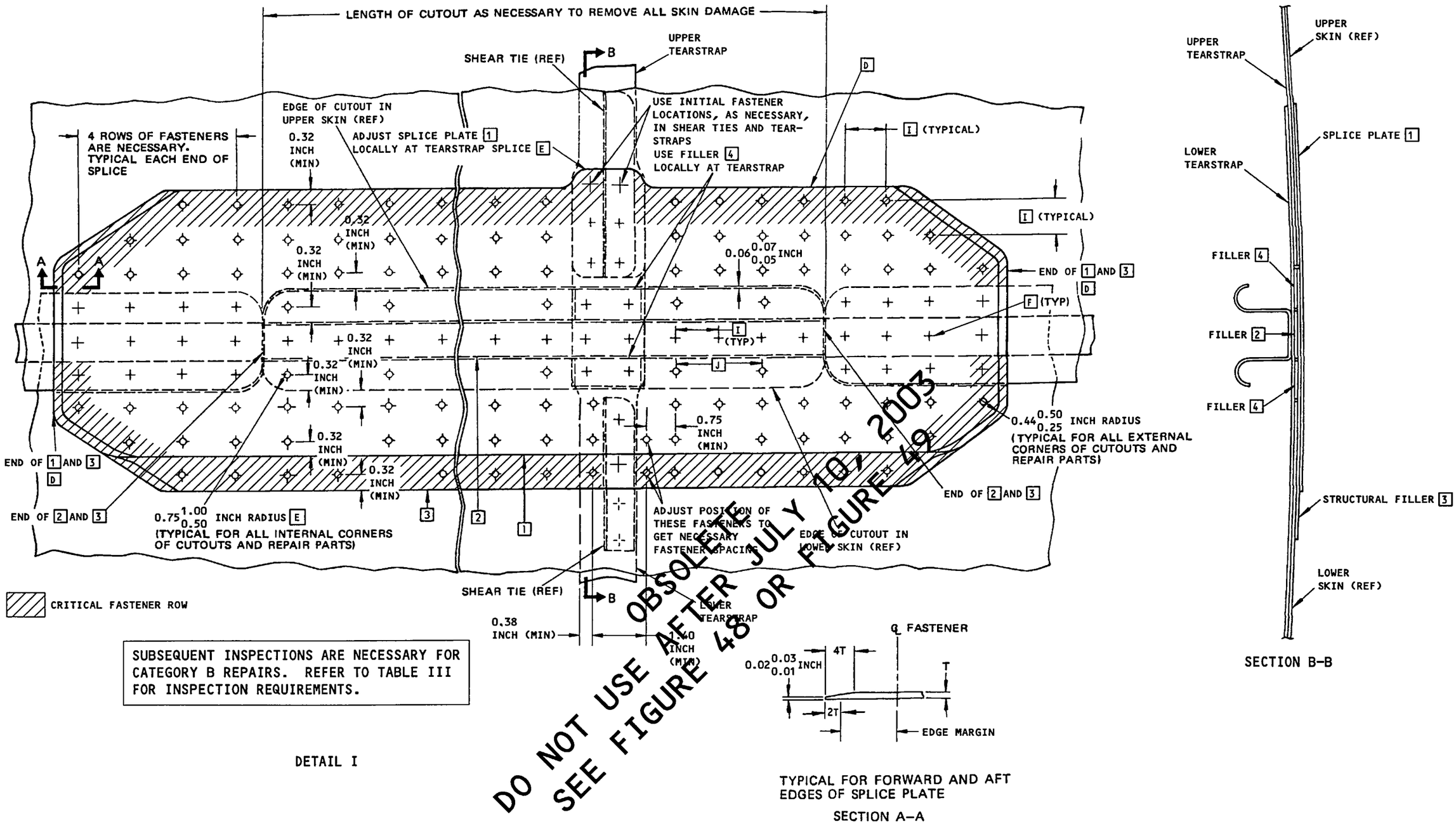

DO NOT USE AFTER JULY 10, 2003
OBSOLETE
SEE FIGURE 48 OR FIGURE 49

Fuselage Skin, Longitudinal Lap Splice - Typical External Repair for Damaged Upper and Lower Skins
Figure 15 (Sheet 4)

BOEING PROPRIETARY - Copyright © - Unpublished Work - See title page for details.

CATEGORY B REPAIR INSPECTION REQUIREMENTS		
INSPECTION THRESHOLD	REPEAT INSPECTION ALTERNATIVES	
	METHOD	INTERVAL
60,000 CYCLES [K]	[H]	[H]
NOTE: Inspect the skin and tearstrap around the first row of fasteners along the edge of the splice plate and structural filler as shown in Detail II.		

TABLE III

OBSOLETE
DO NOT USE AFTER JULY 10, 2003
SEE FIGURE 48 OR FIGURE 49

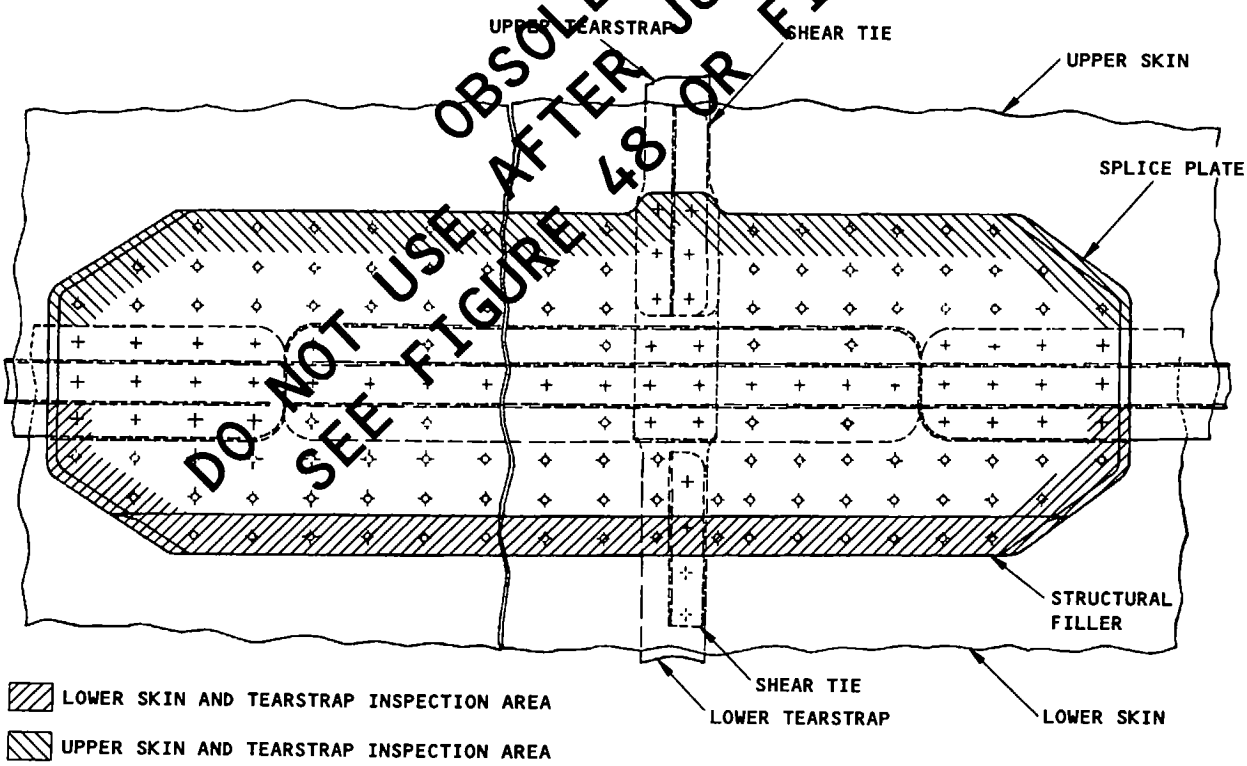

DETAIL II

Fuselage Skin, Longitudinal Lap Splice - Typical External Repair
for Damaged Upper and Lower Skins
Figure 15 (Sheet 5)

BOEING PROPRIETARY - Copyright © - Unpublished Work - See title page for details.

APPLICABILITY

THIS REPAIR APPLIES TO CORRODED OR DAMAGED UPPER SKIN IN LONGITUDINAL LAP SPLICES OF THE FUSELAGE SKINS FOR AIRPLANES WITH CUM LINE NUMBERS 1 THRU 291. I

REPAIR INSTRUCTIONS

1. Remove the lap splice fasteners as necessary.
2. Put a 0.025 inch thick piece of stainless steel metal on the lower skin with a tape. Refer to SRM 51-40-5, Fig. 2.
3. Move the upper and lower skins apart (and the upper tearstrap if necessary) with a nylon or hardwood wedge. Refer to SRM 51-40-5.

   CAUTION: USE SPECIAL CARE WHEN YOU TRIM OUT THE DAMAGED PART OF THE SKIN. DO NOT GOUGE, SCRATCH OR BUCKLE THE ADJACENT SKIN THAT IS NOT DAMAGED. DO NOT CUT THE INTERNAL BONDED TEARSTRAP. IF THE TEARSTRAP IS CUT, IT MUST BE SUFFICIENTLY SPLICED TO KEEP THE FAILSAFE CAPABILITY OF THE INITIAL DESIGN.
4. Carefully make the cutout as necessary. See Detail I. C
5. Remove all adhesive from the skin panels in the area of repair. Refer to AMM 51-21.
6. Clean up all corrosion on the skin panels in the lap splice location. Refer to SRM 53-30-1.
7. Make the repair parts given in Table I. Make the surface contour of the repair parts the same as the surface contour of the skin panel.
8. Assemble the repair parts. See Detail I.
9. Drill the fastener holes.

   NOTE: If there are more than three initial fastener holes, one after another in one of the critical fastener rows, these holes can be zero-timed. Zero-timing will make the inspection threshold start from the time the repair was installed. Refer to the paragraph "Hole Preparation for Repairs" in SRM 51-10-1 for the zero-timing procedure.
10. Disassemble the repair parts.
11. Remove the nicks, scratches, gouges, burrs and sharp edges from the repair parts and the skin.
12. Apply a chemical conversion coating to the repair parts and to the cut edges of the skin. Refer to SRM 51-10-2.
13. Apply one layer of BMS 10-79, Type II or III primer to the repair parts and to the cut edges of the skin. Refer to SOPM 20-44-04.
14. Install countersink repair washers in the initial holes in the skin which will be covered by the splice plate. Refer to SRM 51-30-8.
15. Install the repair parts with BMS 5-95 sealant between the mating surfaces. Refer to SRM 53-30-4.
16. Install the fasteners given in Table II.
17. Apply a fillet seal with BMS 5-95 sealant along the edge of the repair parts. Refer to SRM 51-20-4.
18. Apply the finish to the repair area. Refer to AMM 51-21.
19. If necessary, apply corrosion inhibiting compound on the internal surfaces. Refer to SRM 51-10-2.

NOTES

- THE SOLID FASTENER REPAIR IS CATEGORY A AND NO SUPPLEMENTAL INSPECTIONS ARE NECESSARY IF CONDITION 1, 2 OR 3 IS MET:

  1. a) THE CRITICAL FASTENER ROWS IN THE SKIN AND TEARSTRAP CAN BE VISUALLY INSPECTED FROM THE INSIDE

     b) THE BASE SKIN THICKNESS IS EQUAL TO OR GREATER THAN 0.056 INCHES

     c) THE REPAIR IS NOT WITHIN 10 INCHES OF A CUTOUT.

  2. a) THE LENGTH AND WIDTH OF THE REPAIR SPLICE PLATE IS LESS THAN OR EQUAL TO 12 INCHES

     b) THE CRITICAL FASTENER ROWS IN THE SKIN AND TEARSTRAP CAN BE VISUALLY INSPECTED FROM THE INSIDE

     c) NO OTHER REPAIR DOUBLER IS INSTALLED WITHIN 3 INCHES IN EITHER DIRECTION

     d) THE REPAIR IS NOT WITHIN 10 INCHES OF A CUTOUT.

  3. a) THE LENGTH OF THE REPAIR SPLICE PLATE, IN THE LONGITUDINAL DIRECTION, IS LESS THAN OR EQUAL TO 12 INCHES

     b) THE REPAIR SPLICE PLATE IS LOCATED BELOW S-10L OR S-10R

     c) THE CRITICAL FASTENER ROWS IN THE SKIN AND TEARSTRAP CAN BE VISUALLY INSPECTED FROM THE INSIDE

OBSOLETE AFTER JULY 10, 2003
DO NOT USE SEE FIGURE 49 OR FIGURE 49

Fuselage Skin, Longitudinal Lap Splice - External Repair for Damaged Upper Skin
Figure 16 (Sheet 1)

BOEING PROPRIETARY - Copyright © - Unpublished Work - See title page for details.

NOTES (CONT)

d) NO OTHER REPAIR DOUBLER IS INSTALLED WITHIN 3 INCHES IN THE LONGITUDINAL DIRECTION

e) THE REPAIR IS NOT WITHIN 10 INCHES OF A CUTOUT.

IF THIS REPAIR IS NOT CATEGORY A, THEN IT IS CATEGORY B. THE CATEGORY B REPAIR HAS FAA APPROVAL IF YOU DO THE SUPPLEMENTAL INSPECTIONS GIVEN IN THE REPAIR ASSESSMENT PROGRAM. THE DAMAGE TOLERANCE ASSESSMENT OF THE REPAIR CAN BE DONE WITHIN THE TIME LIMIT SPECIFIED IN THE REPAIR ASSESSMENT PROGRAM AFTER YOU RELEASE THE AIRCRAFT TO SERVICE. REFER TO SRM 51-00-6 FOR GENERAL DATA ABOUT THE REPAIR ASSESSMENT PROGRAM. REFER TO TABLE III FOR INSPECTION REQUIREMENTS. SEE DETAIL II FOR THE INSPECTION AREA.

- THIS REPAIR WILL HAVE AN EFFECT ON THE STRUCTURAL SIGNIFICANT ITEM (SSI):
  - NUMBER F-48; BUT, THE INTERNAL INSPECTION ALTERNATIVES FOR F-48A THROUGH F-48C ARE STILL APPLICABLE
  - NUMBER F-41 WHEN INSTALLED UNDER THE WING-TO-BODY AND LOWER LOBE FAIRINGS, BUT THE INTERNAL INSPECTION ALTERNATIVES ARE STILL APPLICABLE.

  THEREFORE, NO NEW INSPECTION ALTERNATIVES ARE NECESSARY FOR THIS REPAIR. DO THE INTERNAL INSPECTIONS FOR F-41 AND F-48, IF NECESSARY, AT THE SUBSEQUENT SUPPLEMENTAL STRUCTURAL INSPECTION DOCUMENT (SSID) INSPECTION ON THIS AIRPLANE. REFER TO SRM 51-00-4, FIGURE 3 FOR THE APPLICABLE SSI INFORMATION.
- WHEN YOU USE THIS REPAIR REFER TO:
  - AMM 51-21 FOR INTERIOR AND EXTERIOR FINISHES
  - SOPM 20-44-04 FOR APPLICATION OF CORROSION RESISTANT PRIMER
  - SRM 51-00-6 FOR REPAIR CATEGORIES, DEFINITIONS AND REPAIR ASSESSMENT PROGRAM INFORMATION
  - SRM 51-10-1 FOR DAMAGE CLASSIFICATION AND ZERO-TIMING PROCEDURE
  - SRM 51-10-2 FOR PROTECTIVE TREATMENT OF METALS
  - SRM 51-20-4 FOR REPAIR SEALING
  - SRM 51-30 FOR FASTENER CODE, REMOVAL AND INSTALLATION, HOLE SIZES, EDGE MARGINS AND SUBSTITUTION
  - SRM 51-40-5 FOR BONDED METAL STRUCTURAL REPAIR
  - SRM 51-70 FOR AERODYNAMIC SMOOTHNESS
  - SRM 53-30-4 FOR SEALING LAP SPLICES.

[A] USE THE SAME MATERIAL AND HEAT TREAT, BUT ONE GAGE THICKER THAN THE UPPER SKIN. IF THE REPAIR AREA INCLUDES A DOUBLER, ADD THE THICKNESS OF THE DOUBLER TO GET A TOTAL THICKNESS. REFER TO 51-20-1, FIG. 2 FOR LIST OF AVAILABLE SHEET METAL GAGES.

[B] USE THE SAME MATERIAL, HEAT TREAT, AND GAGE AS THE UPPER SKIN.

[C] ADJUST THE LENGTH OF THE CUTOUT AS NECESSARY TO REMOVE ALL DAMAGED SKIN.

[D] USE INITIAL FASTENER LOCATIONS. ADJUST THE SHAPE OF THE REPAIR SPLICE PLATE AS NECESSARY TO KEEP AN APPLICABLE EDGE MARGIN.

[E] USE THE SAME SPACING AS THE INITIAL LAP SPLICE.

[F] USE THE SAME SPACING AS THE OUTER ROWS OF THE INITIAL LAP SPLICE.

[G] DO NOT DECREASE THE EDGE MARGIN BELOW THE MINIMUM. REFER TO SRM 51-30-6.

[H] REPLACE THE INITIAL FASTENER WITH A FASTENER OF THE SAME DIAMETER. IF THE INITIAL FASTENER HOLE IS DAMAGED OR MADE LARGER, REPLACE THE INITIAL FASTENER WITH A 1/64-INCH OR 1/32-INCH OVERSIZE FASTENER.

[I] THIS REPAIR CAN BE USED ON SKIN SECTIONS THAT ARE NOT CHEM MILLED.

[J] REFER TO OPERATOR'S REPAIR ASSESSMENT GUIDELINES FOR THE REPEAT INSPECTION INTERVAL AND METHOD ALTERNATIVES.

[K] IF POSSIBLE, EXTEND THE SPLICE PLATE AN ADDITIONAL ROW PAST THE INITIAL FASTENER ROWS OF THE INTERNAL STRUCTURE. IF THE SPLICE PLATE ENDS ON THE INTERNAL STRUCTURE, THEN THE REPAIR IS CATEGORY B.

NOTE: INTERNAL STRUCTURE INCLUDES STRINGERS, FRAMES, INTERCOSTALS, REINFORCING STRAPS OR OTHER STRUCTURE THAT IS ATTACHED TO THE SKIN WITH FASTENERS.

[L] IF ONE OF THE CRITICAL FASTENER ROWS HAS MORE THAN THREE INITIAL FASTENER HOLES, ONE AFTER ANOTHER, THE THRESHOLD STARTS:

- FROM THE TIME THE REPAIR WAS INSTALLED IF THE HOLES HAVE BEEN ZERO-TIMED
- FROM THE TIME THE AIRPLANE WAS DELIVERED IF THE HOLES HAVE NOT BEEN ZERO-TIMED

FASTENER SYMBOLS

REFERENCE FASTENER LOCATION

INITIAL FASTENER LOCATION
SEE TABLE II FOR FASTENER TYPE. [H]

REPAIR FASTENER LOCATION. SEE TABLE II FOR FASTENER TYPE.

OBSOLETE AFTER JULY 10, 2003
DO NOT USE
SEE FIGURE 48 OR FIGURE 49

Fuselage Skin, Longitudinal Lap Splice - External Repair for Damaged Upper Skin
Figure 16 (Sheet 2)

BOEING PROPRIETARY - Copyright © - Unpublished Work - See title page for details.

REPAIR MATERIAL			
PART		QTY	MATERIAL
1	SPLICE PLATE	1	A
2	STRUCTURAL FILLER	1	B

TABLE I

FASTENERS		
INITIAL LAP JOINT FASTENER	INITIAL AND REPAIR FASTENER LOCATIONS H	
	RECOMMENDED	ALTERNATE
BACR15CE5D BACR15CE6D	BACR15BB5D BACR15BB6D	MS20470D5 MS20470D6
LOCKBOLT OR HEX DRIVE BOLT	BACB30FM()A WITH A BACC30M COLLAR	

TABLE II

OBSOLETE
DO NOT USE AFTER JULY 10, 2003
SEE FIGURE 48 OR FIGURE 49

Fuselage Skin, Longitudinal Lap Splice - Eternal Repair for Damaged Upper Skin
Figure 16 (Sheet 3)

BOEING PROPRIETARY - Copyright © - Unpublished Work - See title page for details.

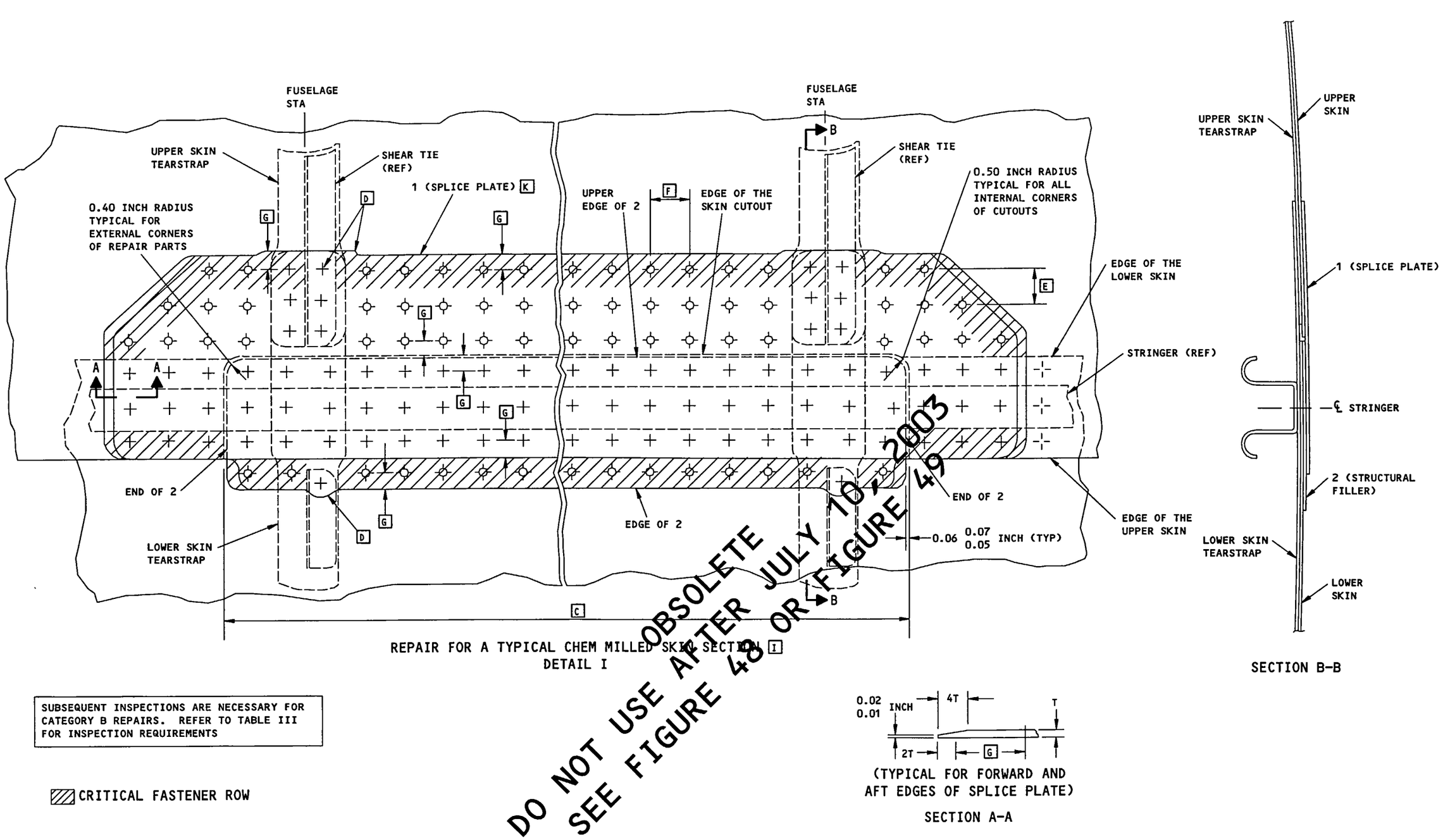

SUBSEQUENT INSPECTIONS ARE NECESSARY FOR CATEGORY B REPAIRS. REFER TO TABLE III FOR INSPECTION REQUIREMENTS

DO NOT USE OBSOLETE AFTER JULY 10, 2003
SEE FIGURE 48 OR FIGURE 49

Fuselage Skin, Longitudinal Lap Splice - External Repair for Damaged Upper Skin
Figure 16 (Sheet 4)

BOEING PROPRIETARY - Copyright © - Unpublished Work - See title page for details.

CATEGORY B REPAIR INSPECTION REQUIREMENTS		
INSPECTION THRESHOLD	REPEAT INSPECTION ALTERNATIVES	
	METHOD	INTERVAL
60,000 CYCLES [L]	[J]	[J]

NOTE: Inspect the skin and tearstrap around the first row of fasteners along the edge of the splice plate and structural filler as shown in Detail II.

TABLE III

DO NOT USE OBSOLETE AFTER JULY 10, 2003
SEE FIGURE 48 OR FIGURE 49

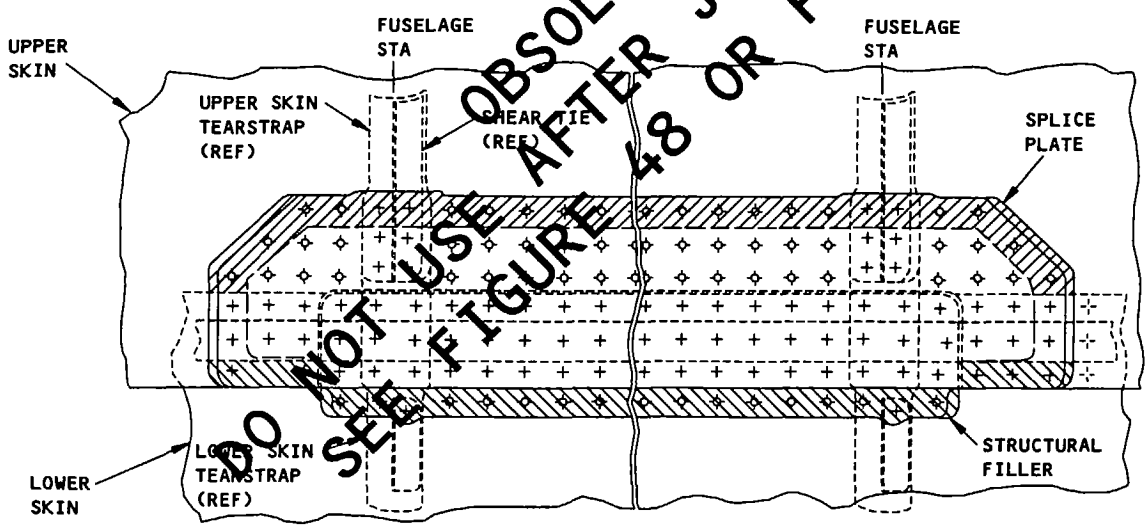

DETAIL II

UPPER SKIN AND TEARSTRAP INSPECTION AREA FOR ALL INSPECTION METHODS

LOWER SKIN AND TEARSTRAP INSPECTION AREA FOR ALL INSPECTION METHODS

Fuselage Skin, Longitudinal Lap Splices - External Repair for Damaged Upper Skin
Figure 16 (Sheet 5)

BOEING PROPRIETARY - Copyright © - Unpublished Work - See title page for details.

REPAIR INSTRUCTIONS

1. Make inspection of suspect damage area using available NDT techniques and refer to table I or table II for allowable voids.
2. Refer to table III to find applicable skin illustration when repair is indicated.
3. Remove rivets, as required, to allow access and inspection of damage area.

   NOTE: For repairs per details II, III and IV, follow steps 4 thru 7. For repairs per details V thru XII, follow steps 8 thru 16.
4. Clean up corrosion products.
5. Apply BMS 3-23 corrosion inhibiting compound and ensure penetration to delaminated and corroded surfaces. Allow solvent to evaporate.
6. Install rivets as indicated in applicable detail.
7. Restore airplane to normal.
8. Trim out damaged area per applicable detail.
9. Clean up surface corrosion under damage cutout and ensure that material thickness remaining is within the applicable allowables.
10. Alodize reworked surfaces and coat with BMS 10-11 primer.
11. Make repair parts.
12. Assemble the repair parts and drill the fastener holes.
13. Remove the repair parts and alodize the raw edges of repair and existing parts.
14. Apply one coat of BMS 10-11 primer to repair parts and trimmed edges of existing parts.
15. Install parts with BMS 5-95, class C fay surface seal.
16. Restore the finish and return the airplane to normal.

NOTES

- EXAMINE THE BONDED DOUBLER AND STRAP FOR DELAMINATION. REFER TO SERVICE BULLETIN 737-53-1179.
- DAMAGE IS ASSUMED TO BE CAUSED BY DELAMINATION OR CORROSION OF SKIN AND/OR DOUBLER/TEAR STRAP.
- WHEN YOU USE THIS REPAIR REFER TO:
  - AMM 51-21 FOR INTERIOR AND EXTERIOR FINISHES
  - SRM 51-10-2 FOR PROTECTIVE TREATMENT OF METAL
  - SRM 51-30 FOR FASTENER CODE, REMOVAL, INSTALLATION, HOLE SIZES AND EDGE MARGINS
  - SRM 53-30-4 FOR SEALING OF FUSELAGE SKIN REPAIRS.

  BOEING DOCUMENT D6-7170 FOR NONDESTRUCTIVE TEST AND INSPECTION PROCEDURES.

  BOEING DOCUMENT D6-41910, CORROSION PREVENTION MANUAL FOR CORROSION PREVENTATIVE MAINTENANCE PRACTICES.

Fuselage Skin - Doubler and Strap Delamination and Corrosion Repair
Figure 17 (Sheet 1)

BOEING PROPRIETARY - Copyright © - Unpublished Work - See title page for details.

NOTES (CONTINUED)

- ALL DIMENSIONS ARE IN INCHES, UNLESS DIFFERENTLY SPECIFIED.
- BREAK SHARP EDGES OF EXISTING AND REPAIR PARTS 0.015 TO 0.030

[A] APPLY BMS 3-23 CORROSION INHIBITING COMPOUND BETWEEN SKIN AND DOUBLER USING DRILLED HOLES FOR ACCESS TO VOID

[B] APPLY BMS 3-23 CORROSION INHIBITING COMPOUND BETWEEN SKIN AND STRAP IN DELAMINATED AREAS

[C] REPLACE EXISTING COUNTERSUNK RIVETS WITH 1/16-OVERSIZE UNIVERSAL HEAD RIVETS

[D] SKIN ONLY OR DOUBLER ONLY MAY BE TRIMMED OUT IN SOME CASES [E] [F]

[E] WHERE DOUBLER ONLY IS TRIMMED OUT, RIVET SKIN TO REPAIR PLATE WITH BACR15CE5D COUNTERSUNK HEAD RIVETS USING GRID PATTERN SHOWN IN DETAIL I

[F] WHERE SKIN ONLY IS TRIMMED, ADD FILLER PART 4 AS REQUIRED [G]

[G] RIVET WITH SIMILAR PATTERN AS SHOWN IN DETAILS II AND III IN STRAP AREAS AND DETAIL I IN DOUBLER AREAS. NEW RIVETS TO BE BACR15CE5D COUNTERSUNK RIVETS. REINSTALL SAME TYPE AND SIZE AS REMOVED FROM EXISTING LOCATIONS

[H] SKIN AND SOLID DOUBLER AND STRAP TRIMMED OUT

[I] SKIN ONLY OR DOUBLER ONLY TRIMMED OUT

[J] IF EDGE OF REPAIR IS NOT ON STRINGER MAKE TABS ON REPAIR PLATE AS SHOWN SO THAT END FASTENERS ARE THROUGH STRINGER

[K] REINSTALL SAME MATERIAL AND SAME DIAMETER (OR 1/32 OVERSIZE) FASTENER AS REMOVED

[L] BACR15CE5D WHEN USING 0.056 OR 0.063 REPAIR PLATES

BACR15CE6D WHEN USING 0.071 REPAIR PLATES

MS20470D RIVETS OPTIONAL

[M] SAME GAGE AS EXISTING SKIN PLUS THICKNESS OF STRAP OR DOUBLER

[N] SAME GAGE AS EXISTING SKIN

[O] SAME GAGE AS EXISTING SHEAR TIE

[P] SAME GAGE AS STRAP

[Q] WITH 0.040-GAGE PLATE INSTALL MS20470D5 RIVETS; WITH 0.056-GAGE PLATE INSTALL BACR15CE5D RIVETS

[R] SKIN AND WAFFLE DOUBLER TRIMMED OUT

[S] WHERE DOUBLER ONLY IS TRIMMED OUT, ADD FILLER, PART 15, [Q]

[T] SAME GAGE AS DOUBLER

[U] WHERE SKIN AND DOUBLER ARE TRIMMED OUT, ADD FILLER, PART 3, [Q]

[V] WHERE SKIN ONLY IS TRIMMED OUT (IN AREA OF SOLID DOUBLER) ADD FILLER, PART 3, OVER ENTIRE AREA, RIVET ALONG ALL EDGES OF FILLER WITH ONE ROW OF FASTENERS AS SHOWN, THEN FIELD RIVET USING GRID PATTERN SHOWN IN DETAIL I

[W] THIS REPAIR APPLICABLE TO CORROSION REPAIR OF SKIN AND STRAP BETWEEN CIRCUMFERENTIAL STRAPS

[X] THIS REPAIR APPLIES TO FUSELAGE AREAS WITH A 0.036 THICK SKIN AND A 0.036 DOUBLER, BELOW S-14.

Fuselage Skin - Doubler and Strap Delamination and Corrosion Repair
Figure 17 (Sheet 2)

BOEING PROPRIETARY - Copyright © - Unpublished Work - See title page for details.

SYMBOLS

- EXISTING FASTENER LOCATION REFERENCE
- EXISTING FASTENER LOCATION. SEE TABLE III
- REPAIR FASTENER. SEE TABLE III
- EXISTING FASTENER LOCATION. SEE TABLE III
- EXISTING FASTENER LOCATION. SEE TABLE III
- REPAIR FASTENER. SEE TABLE III

REPAIR MATERIAL			
PART		QTY	MATERIAL
1	PLATE	1	0.071 CLAD 2024-T3
2	PLATE	1	0.063 CLAD 2024-T3
3	FILLER	1	M CLAD 2024-T3
4	FILLER	1	N CLAD 2024-T3
5	STRAP	1	0.040 CLAD 2024-T3
6	SHEAR TIE	AS REQD	O CLAD 2024-T3 OR CLAD 7075-T6
7	FILLER	1	0.040 CLAD 2024-T3 OR CLAD 7075-T6
8	STRAP	1	0.050 x 1.50 CLAD 2024-T3

REPAIR MATERIAL			
PART		QTY	MATERIAL
			OPTIONAL: 0.040 x 1.70 CLAD 2024-T3
9	FILLER	1	P CLAD 2024-T3
10	STRAP	1	0.050 x 0.75 CLAD 2024-T3
11	STRAP	1	0.040 x 0.85 CLAD 2024-T3 OR 0.036 x 0.95 CLAD 2024-T3
12	PLATE	1	0.040 CLAD 2024-T3 OR 0.056 CLAD 2024-T3 O
13	PLATE	1	0.080 CLAD 2024-T3
14	PLATE	1	0.056 CLAD 2024-T3
15	FILLER	1	T CLAD 2024-T3

Fuselage Skin - Doubler and Strap Delamination and Corrosion Repair
Figure 17 (Sheet 3)

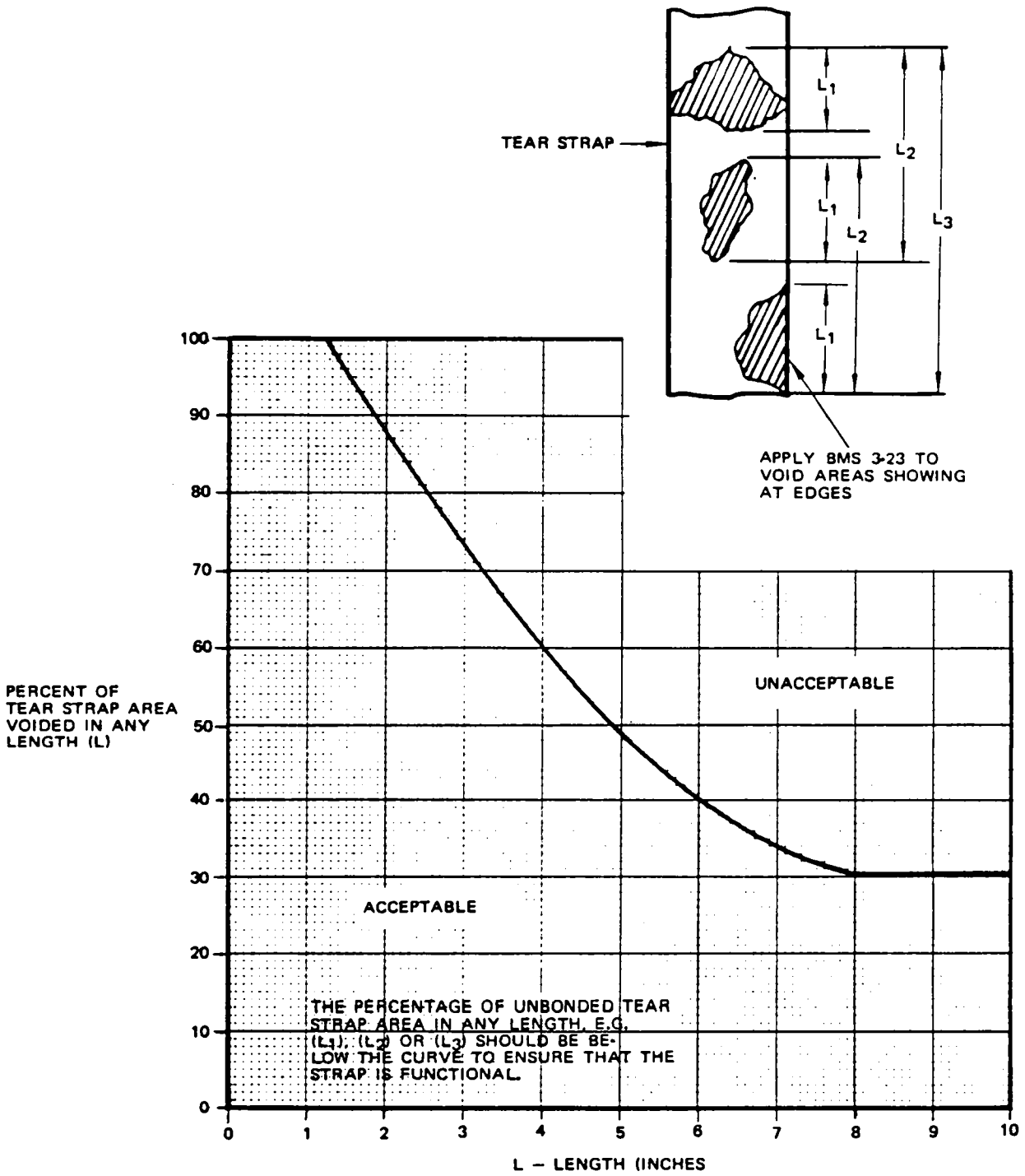

TEAR STRAP ALLOWABLE VOIDS

TABLE I

Fuselage Skin - Doubler and Strap Delamination and Corrosion Repair
Figure 17 (Sheet 4)

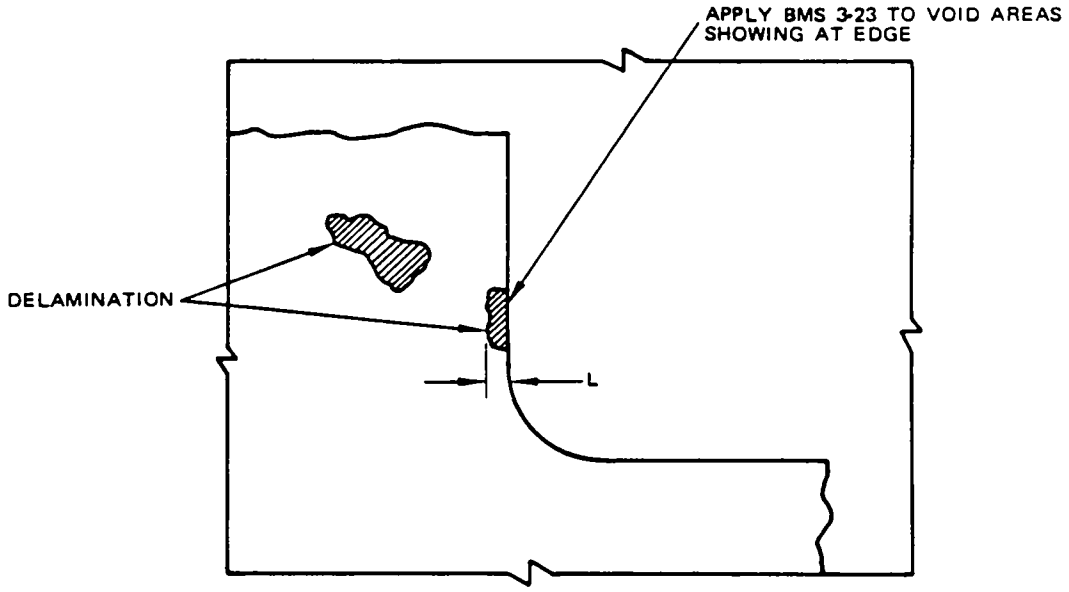

ALLOWABLE VOIDS	LOCAL REGIONS OF DELAMINATION LESS THAN 3 SQUARE INCHES
	AT VOIDS AT EDGE, DIMENSION "L" IS LESS THAN ONE INCH FROM EDGE OF DOUBLER

DOUBLER ALLOWABLE VOIDS
TABLE II

Fuselage Skin - Doubler and Strap Delamination and Corrosion Repair
Figure 17 (Sheet 5)

DESCRIPTION OF REPAIR AREA	REPAIR DETAIL	REPAIR FASTENER				
TYPICAL BONDED DOUBLER AND STRAP AREAS WITH BOND VOIDS REPAIRED WITH FIELD RIVETS	I	C	MS20470D5			
DELAMINATED TEAR STRAP AT FRAME AND LESS THAN 10% THICKNESS LOSS AFTER CORROSION CLEAN-UP	II	MS20470D8	MS20470D5			
DELAMINATED TEAR STRAP BETWEEN FRAMES WITH LESS THAN 10% THICKNESS LOSS AFTER CORROSION CLEAN-UP	III		MS20470D5			
DELAMINATED STRAP UNDER STRINGERS WITH LESS THAN 10% THICKNESS LOSS AFTER CORROSION CLEAN-UP	IV	C				
GENERAL REPAIR - SKIN, DOUBLER, AND STRAP	V	K	L	C	MS20470D8	L
SMALL FLUSH REPAIR TO SKIN AND DOUBLER	VI		MS20470D6 OPTIONAL: BACR15CE-6D			
REPAIR OF TEAR STRAP AT FRAMES - INTERNAL REPAIR	VII		MS20470D6	C	MS20470D8	MS20470D5
REPAIR OF TEAR STRAP AT FRAMES - EXTERNAL REPAIR	VIII		MS20470D5	C	MS20470D8	
REPAIR OF TEAR STRAP BETWEEN FRAMES INTERNAL REPAIR	IX		MS20470D5	C		
REPAIR OF TEAR STRAP BETWEEN FRAMES EXTERNAL REPAIR	X		MS20470D5	C		
REPAIR OF STRAP AT STRINGER	XI			C		
REPAIR OF STRAP AND SKIN AT STRINGER OR SKIN ONLY AT STRINGER	XII		Q	C		

TABLE III

Fuselage Skin - Doubler and Strap Delamination and Corrosion Repair
Figure 17 (Sheet 6)

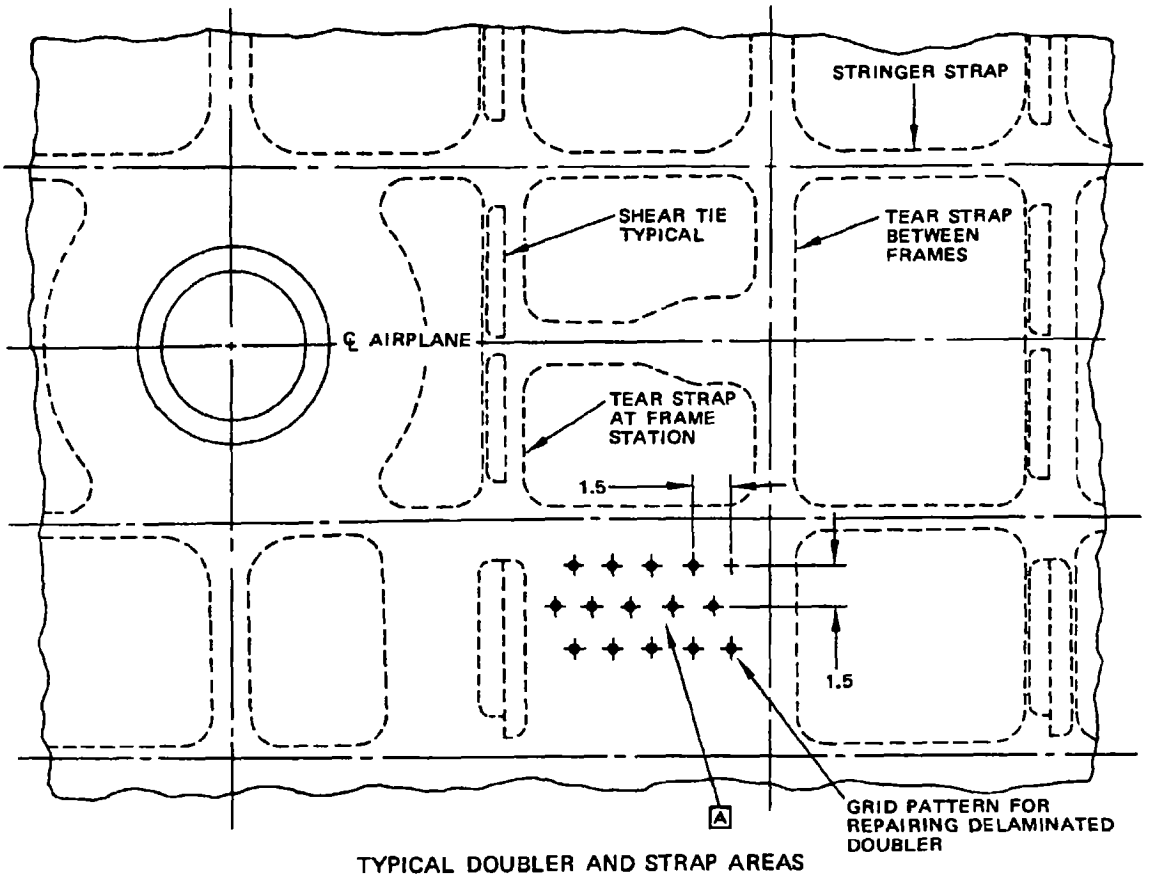

TYPICAL DOUBLER AND STRAP AREAS
DETAIL I

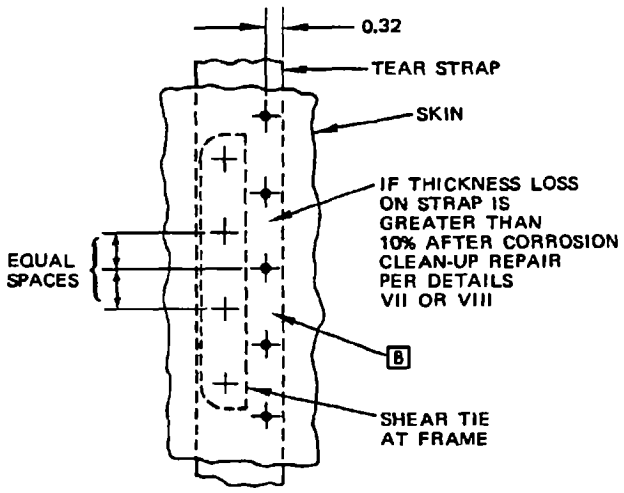

DELAMINATED TEAR STRAP AT FRAME
DETAIL II

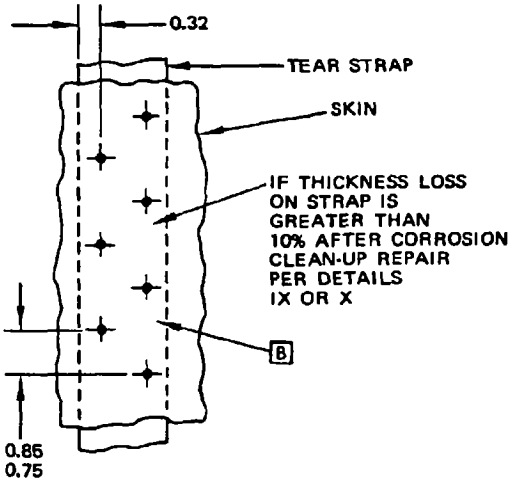

DELAMINATED TEAR STRAP BETWEEN FRAMES
DETAIL III

Fuselage Skin - Doubler and Strap Delamination and Corrosion Repair
Figure 17 (Sheet 7)

C11318
BOEING PROPRIETARY - Copyright © - Unpublished Work - See title page for details.

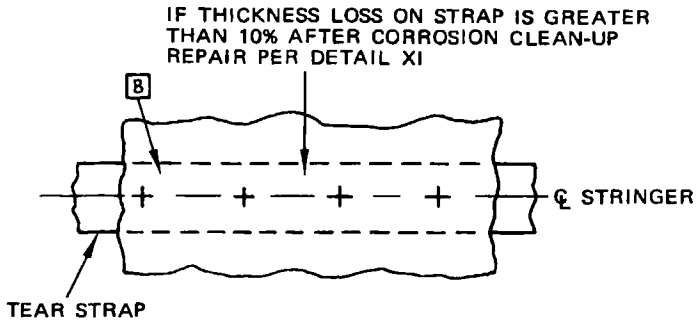

DELAMINATED STRAP UNDER STRINGERS

DETAIL IV

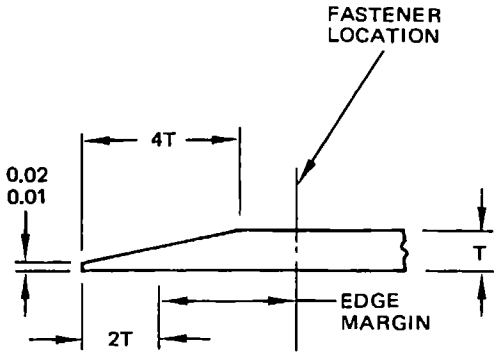

TYPICAL FOR FORE AND AFT EDGES
SECTION A–A

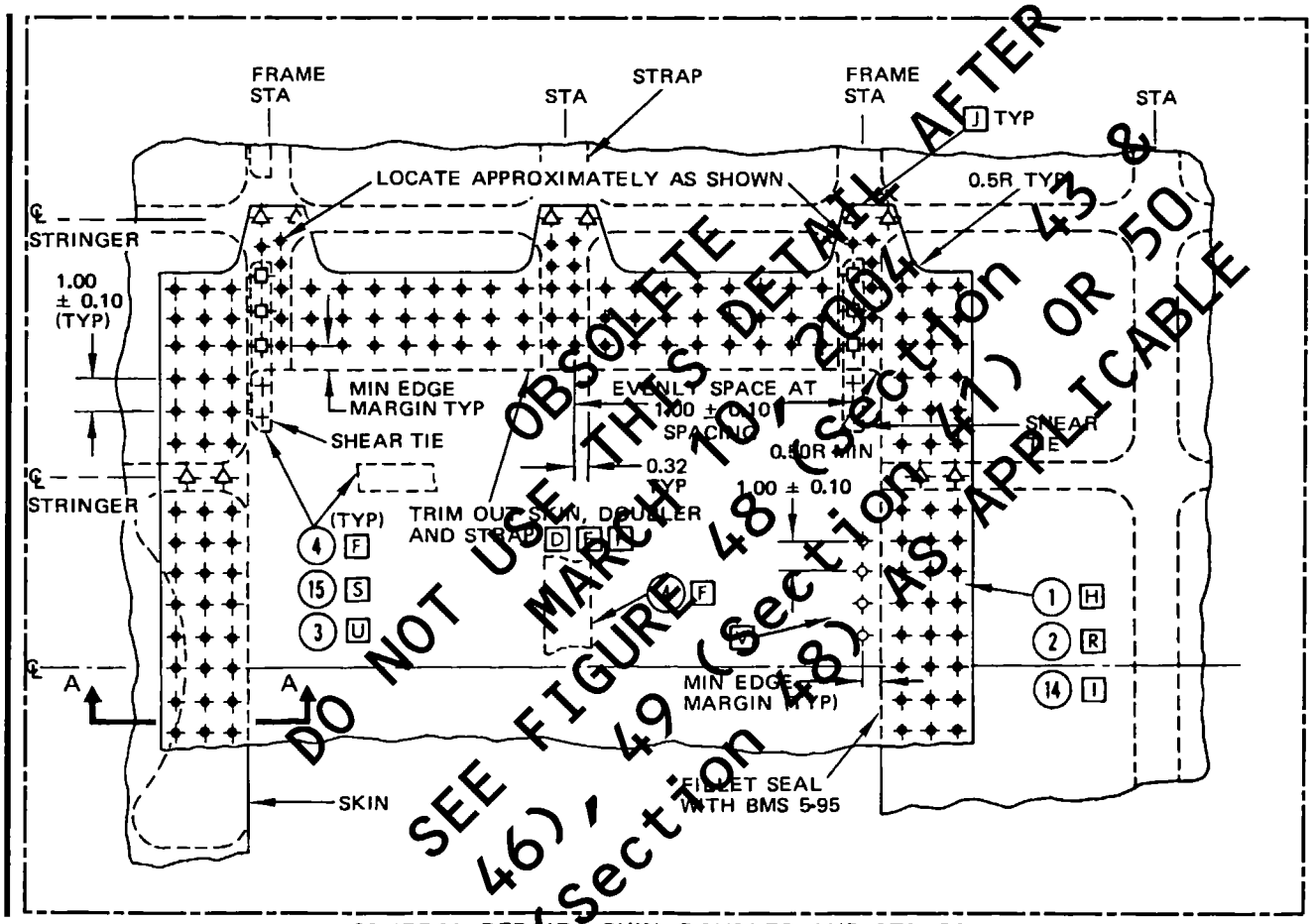

DO NOT USE THIS DETAIL AFTER MARCH 10, 2004 OBSOLETE
SEE FIGURE 48 (Section 43 & 46), 49 (Section 11) OR 50 (Section 48) AS APPLICABLE

GENERAL REPAIR - SKIN, DOUBLER AND STRAPS

DETAIL V X

Fuselage Skin - Doubler and Strap Delamination and Corrosion Repair
Figure 17 (Sheet 8)

BOEING PROPRIETARY - Copyright © - Unpublished Work - See title page for details.

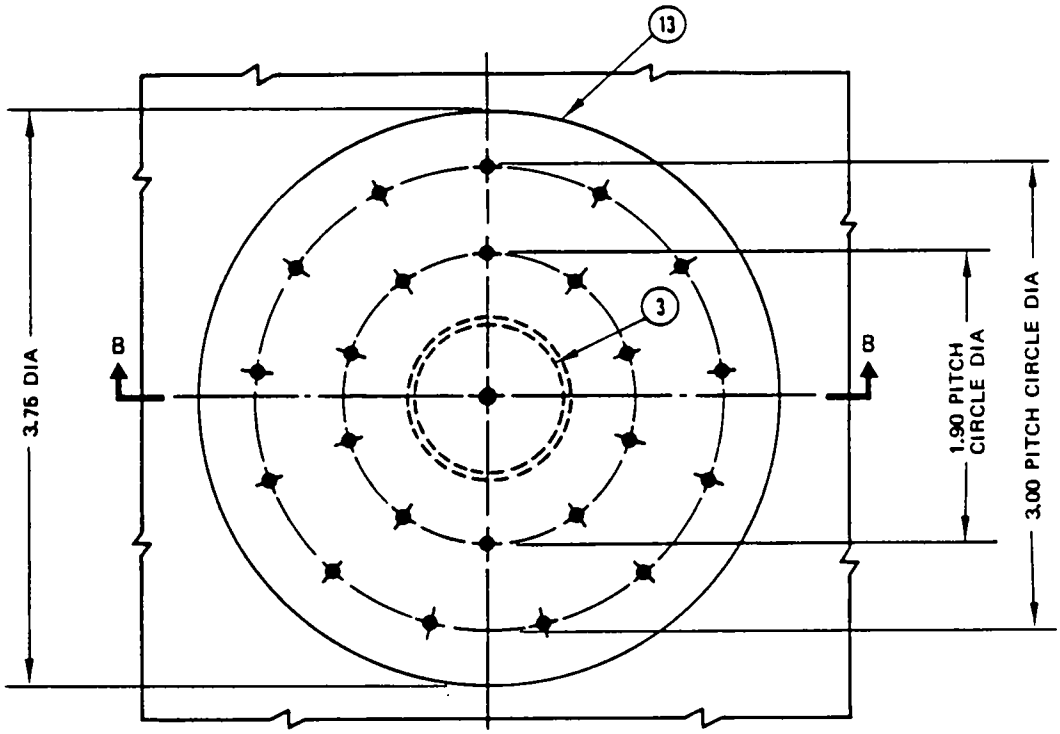

SMALL FLUSH REPAIR TO SKIN AND DOUBLER

DETAIL VI

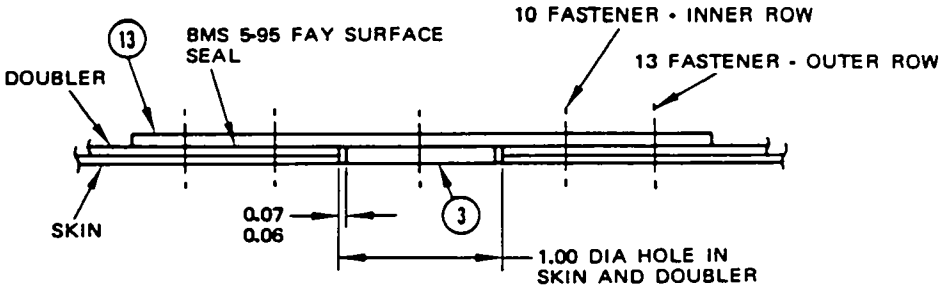

SECTION B–B

Fuselage Skin - Doubler and Strap Delamination and Corrosion Repair
Figure 17 (Sheet 9)

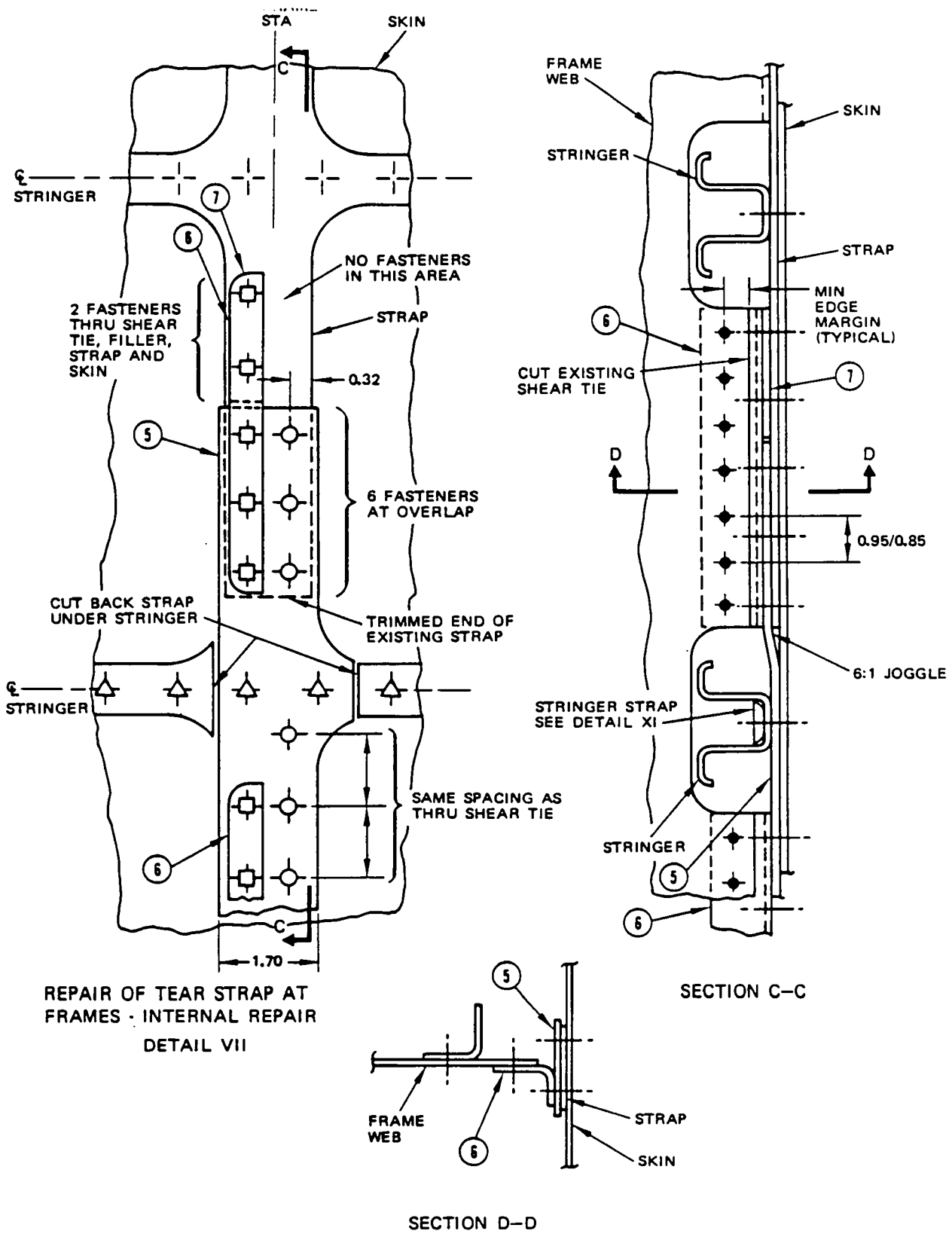

Fuselage Skin - Doubler and Strap Delamination and Corrosion Repair
Figure 17 (Sheet 10)

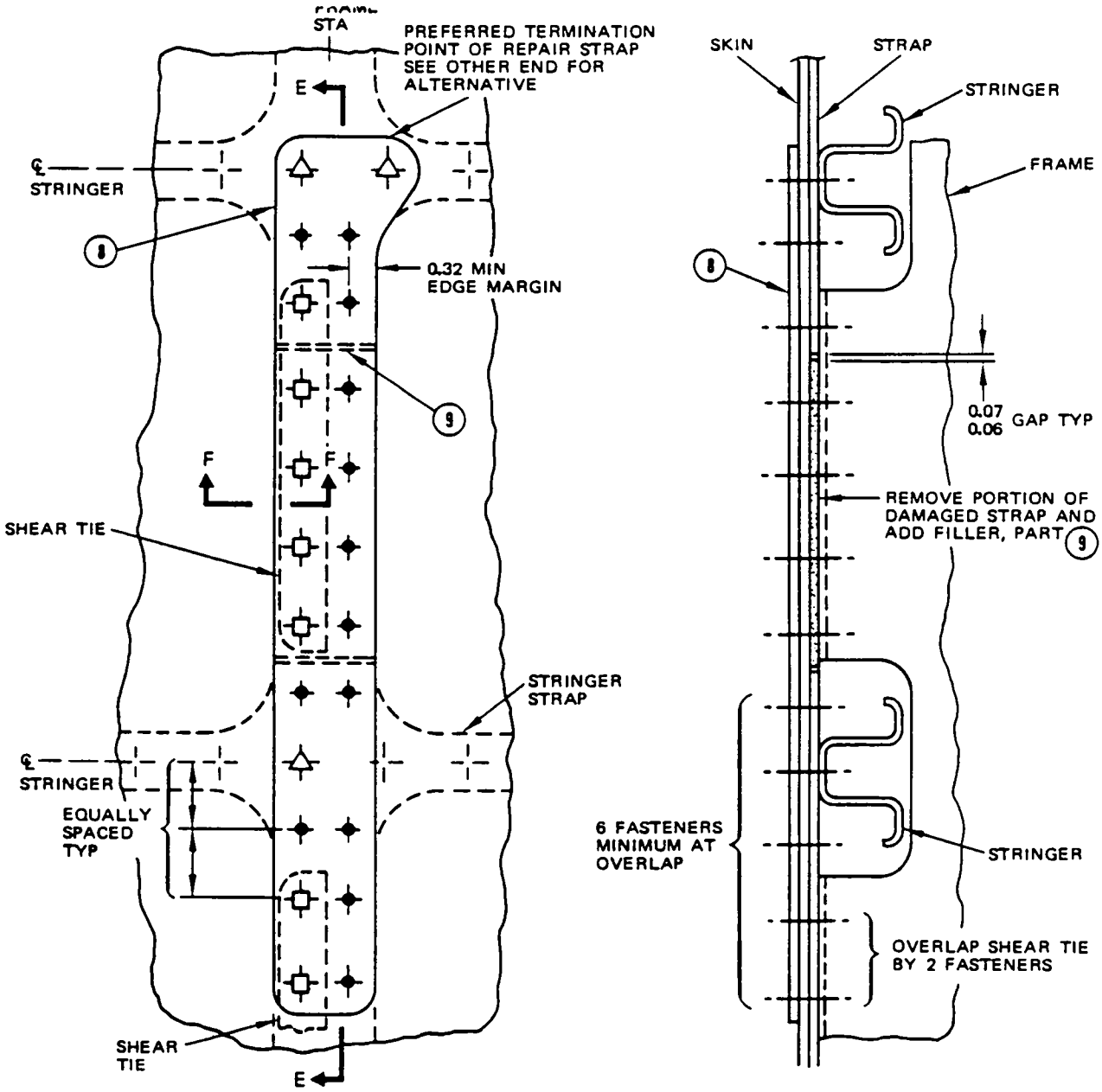

REPAIR OF TEAR STRAP AT FRAMES
EXTERNAL REPAIR

DETAIL VIII

SECTION E–E

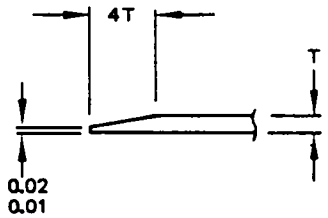

TYPICAL CHAMFER FOR FORE AND AFT EDGES
SECTION F–F

Fuselage Skin - Doubler and Strap Delamination and Corrosion Repair
Figure 17 (Sheet 11)

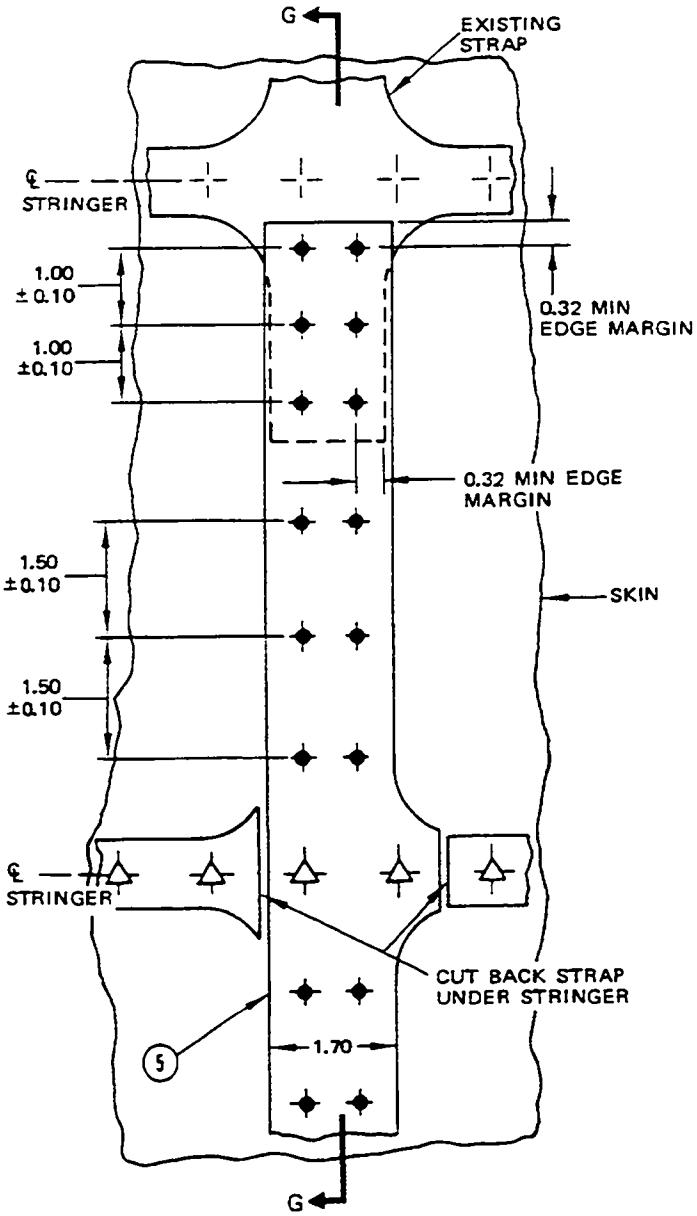

TEAR STRAP REPAIR BETWEEN FRAMES - INTERNAL REPAIR

DETAIL IX X

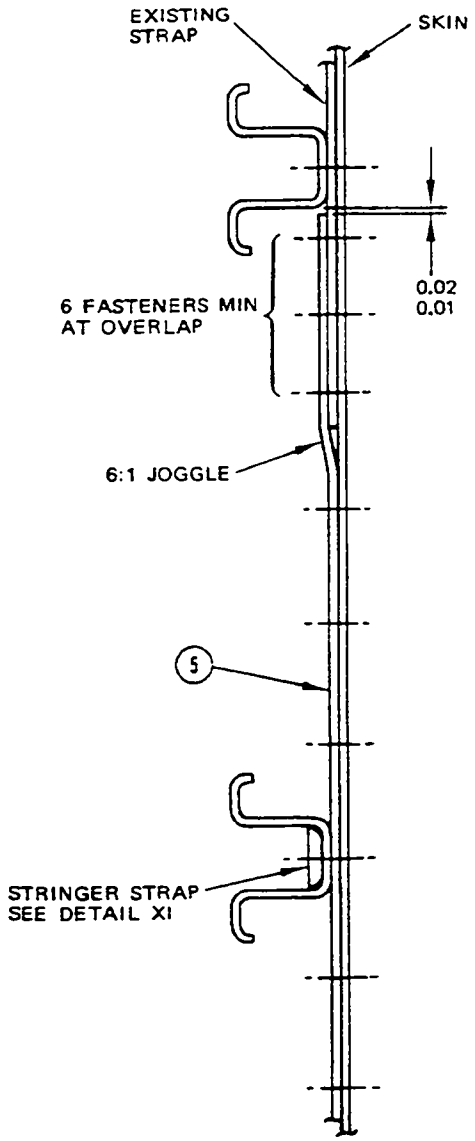

SECTION G–G

Fuselage Skin - Doubler and Strap Delamination and Corrosion Repair
Figure 17 (Sheet 12)

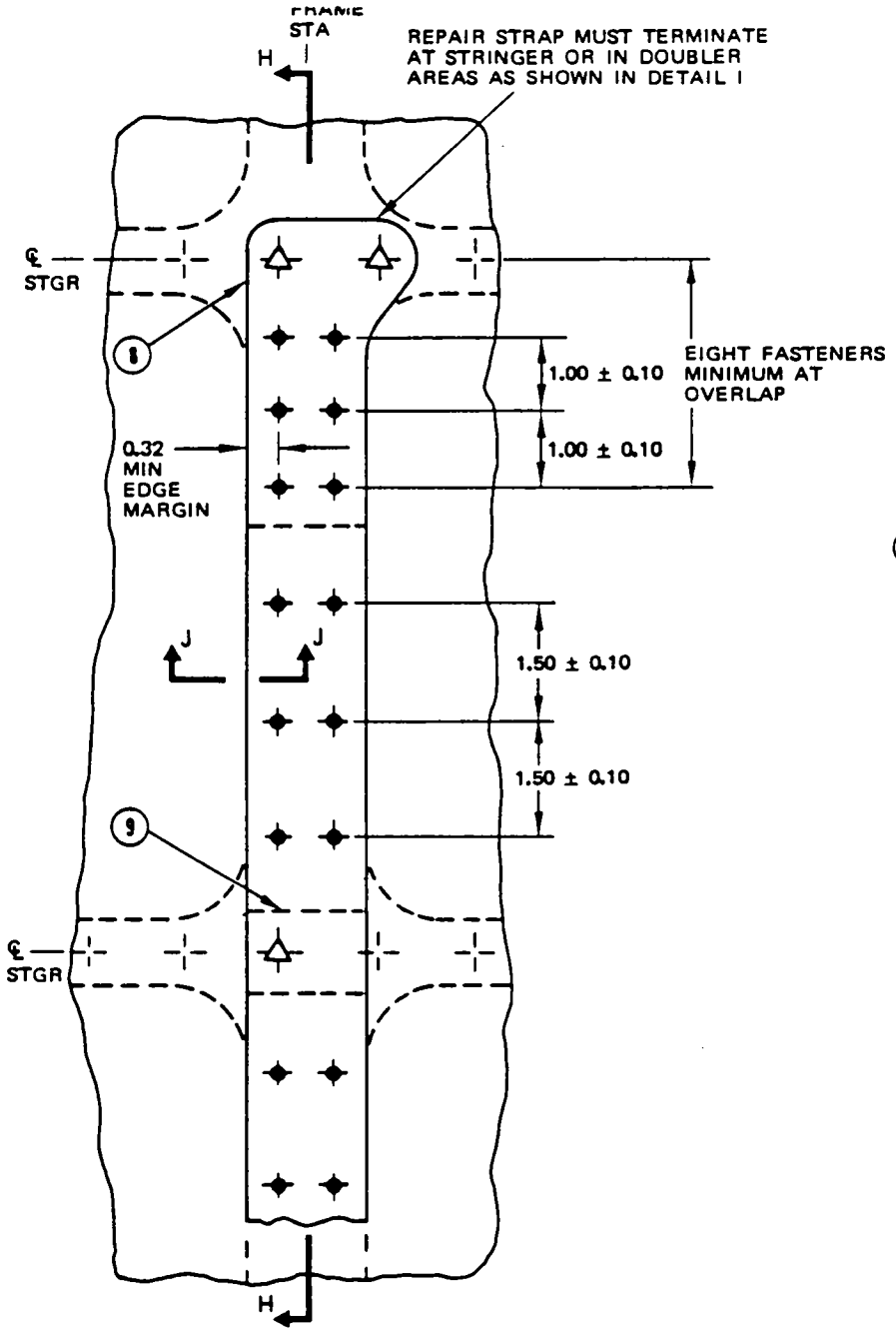

REPAIR OF TEAR STRAP BETWEEN FRAMES
EXTERNAL REPAIR
DETAIL X

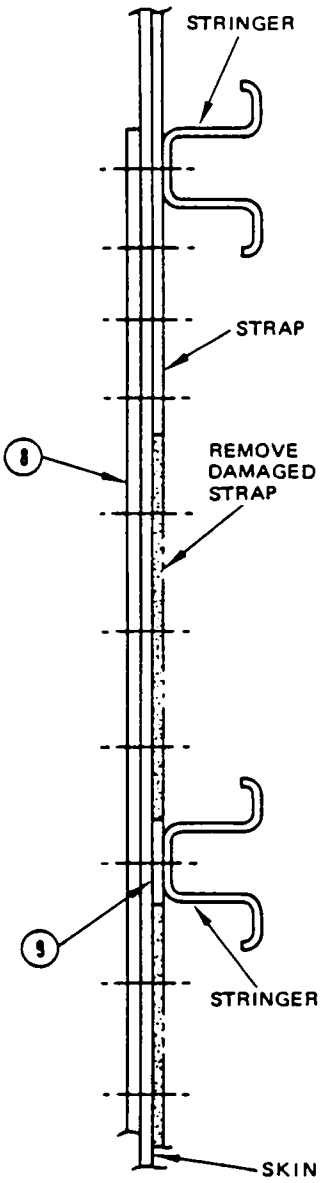

SECTION H–H

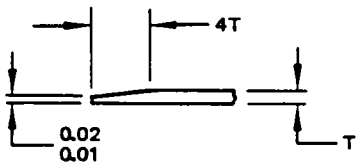

TYPICAL FOR FORE AND AFT EDGES
SECTION J–J

Fuselage Skin - Doubler and Strap Delamination and Corrosion Repair
Figure 17 (Sheet 13)

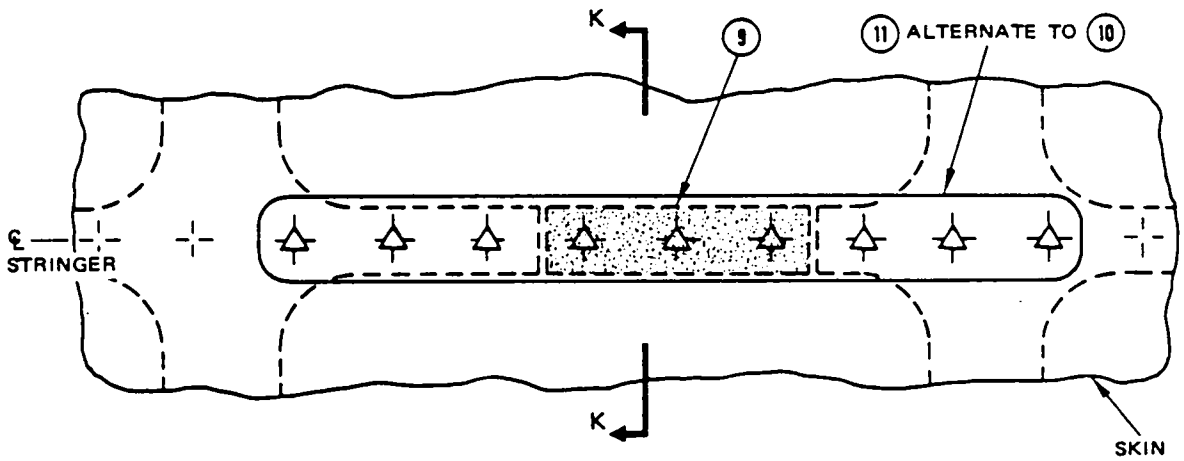

REPAIR OF STRAP AT STRINGER

DETAIL XI

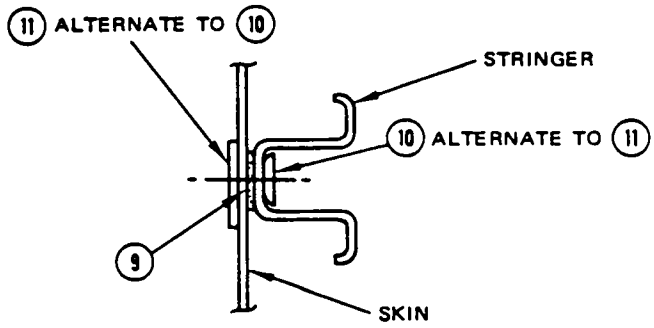

SECTION K–K

Fuselage Skin - Doubler and Strap Delamination and Corrosion Repair
Figure 17 (Sheet 14)

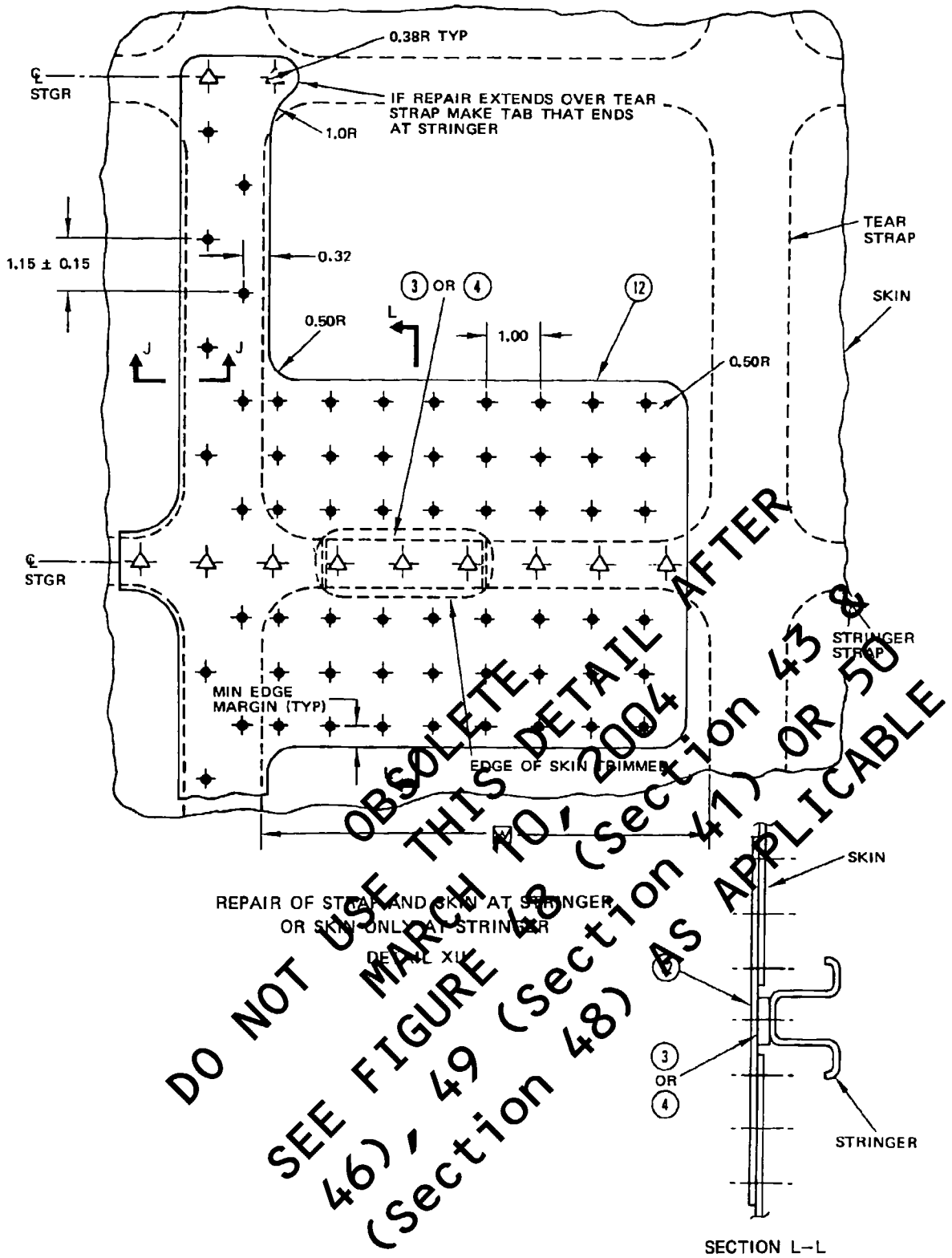

DO NOT USE THIS DETAIL AFTER MARCH 10, 2004
OBSOLETE
SEE FIGURE 43 (Section 41) OR 50 (Section 48) AS APPLICABLE
46), 49 (Section 48)

Fuselage Skin - Doubler and Strap Delamination and Corrosion Repair
Figure 17 (Sheet 15)

BOEING PROPRIETARY - Copyright © - Unpublished Work - See title page for details.

APPLICABILITY
THIS REPAIR IS PREFERRED TO THE BONDED REPAIR SHOWN IN FIG. 5.

REPAIR INSTRUCTIONS

1. Clean out damage to a circular hole not exceeding 1.0 inch diameter. Deburr the edges of the hole.
2. Select the appropriate repair from Details I or II.
3. Remove the existing fasteners as required.
4. Make the appropriate repair parts.
5. Alodize the cut edges of the skin and repair parts.
6. Install the repair parts making a faying surface seal with BMS 5-95 sealant as described in 53-30-4.
7. Form a fillet around the periphery of the internal doubler using the sealant squeezed out during installation. Apply additional sealant if required.
8. Restore the finish.

NOTES

- THIS IS A CATEGORY A REPAIR.
  THE INSPECTIONS GIVEN IN THE BASELINE ZONAL INSPECTION (BZI) ARE SUFFICIENT TO MAINTAIN THE DAMAGE TOLERANCE OF THE INITIAL STRUCTURE WITH THIS REPAIR INSTALLED. REFER TO 51-00-6 FOR REPAIR CATEGORIES, BZI DEFINITION AND REPAIR ASSESSMENT INFORMATION.
- REFER TO THE FOLLOWING WHEN USING THIS REPAIR:
  - SRM 51-10-2 FOR PROTECTIVE TREATMENT OF METALS
  - SRM 51-30 FOR FASTENER CODE, REMOVAL AND INSTALLATION, HOLE SIZES AND EDGE MARGINS
  - SRM 51-70 FOR AERODYNAMIC SMOOTHNESS REQUIREMENTS
  - SRM 53-30-4 FOR SEALING OF FUSELAGE SKIN REPAIRS
  - AMM 51-21-0 FOR INTERIOR AND EXTERIOR FINISH
- BREAK SHARP EDGES OF ORIGINAL AND REPAIR PARTS 0.018 TO 0.030

[A] THIS REPAIR WILL NOT HAVE AN EFFECT ON THE STRUCTURAL SIGNIFICANT ITEMS (SSI) GIVEN IN SRM 51-00-4, FIGURE 3.

[B] THIS REPAIR WILL HAVE AN EFFECT ON THE STRUCTURAL SIGNIFICANT ITEM (SSI):

- NUMBER F-39 WHEN INSTALLED IN THE CROWN AREA, BUT THE INSPECTION ALTERNATIVES FOR F-39A THROUGH F-39H ARE STILL APPLICABLE
- NUMBER F-41 WHEN INSTALLED UNDER THE WING-TO-BODY AND LOWER LOBE FAIRINGS, BUT THE INSPECTION ALTERNATIVES ARE STILL APPLICABLE.

THEREFORE, NO NEW INSPECTION ALTERNATIVES ARE NECESSARY FOR THIS REPAIR. DO THE INSPECTIONS FOR F-39 AND F-41, IF NECESSARY, AT THE SUBSEQUENT SUPPLEMENTAL STRUCTURAL INSPECTION DOCUMENT (SSID) INSPECTION ON THIS AIRPLANE. REFER TO SRM 51-00-4, FIGURE 3 FOR THE APPLICABLE SSI INFORMATION.

FASTENER SYMBOLS

+ ORIGINAL FASTENER LOCATIONS

⊕ REPAIR FASTENER LOCATIONS

REPAIR MATERIAL			
PART		QTY	MATERIAL
1	DOUBLER	1	0.040 CLAD 2024-T3
2	FILLER	1	0.036 CLAD 2024-T3
3	FILLER	1	0.036 CLAD 2024-T3
4	DOUBLER	1	0.040 CLAD 2024-T3
5	TAPERED SHIM	4	0.036 CLAD 2024-T3

Fuselage Skin - Preferred Small Flush Repair for 0.036 Skin
Figure 18 (Sheet 1)

BOEING PROPRIETARY - Copyright © - Unpublished Work - See title page for details.

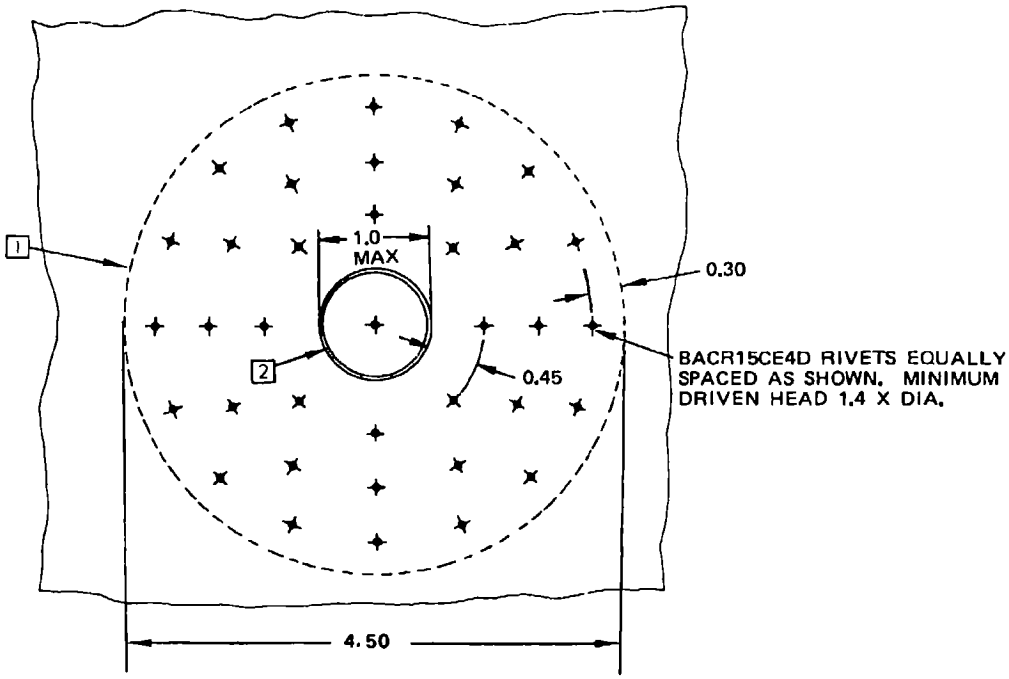

REPAIR FOR DAMAGE WITH CENTER NOT CLOSER THAN 2.25 TO NEAREST BONDED DOUBLER

BAC15RCE5D (TYP) THROUGH STRINGERS

DETAIL I [A]

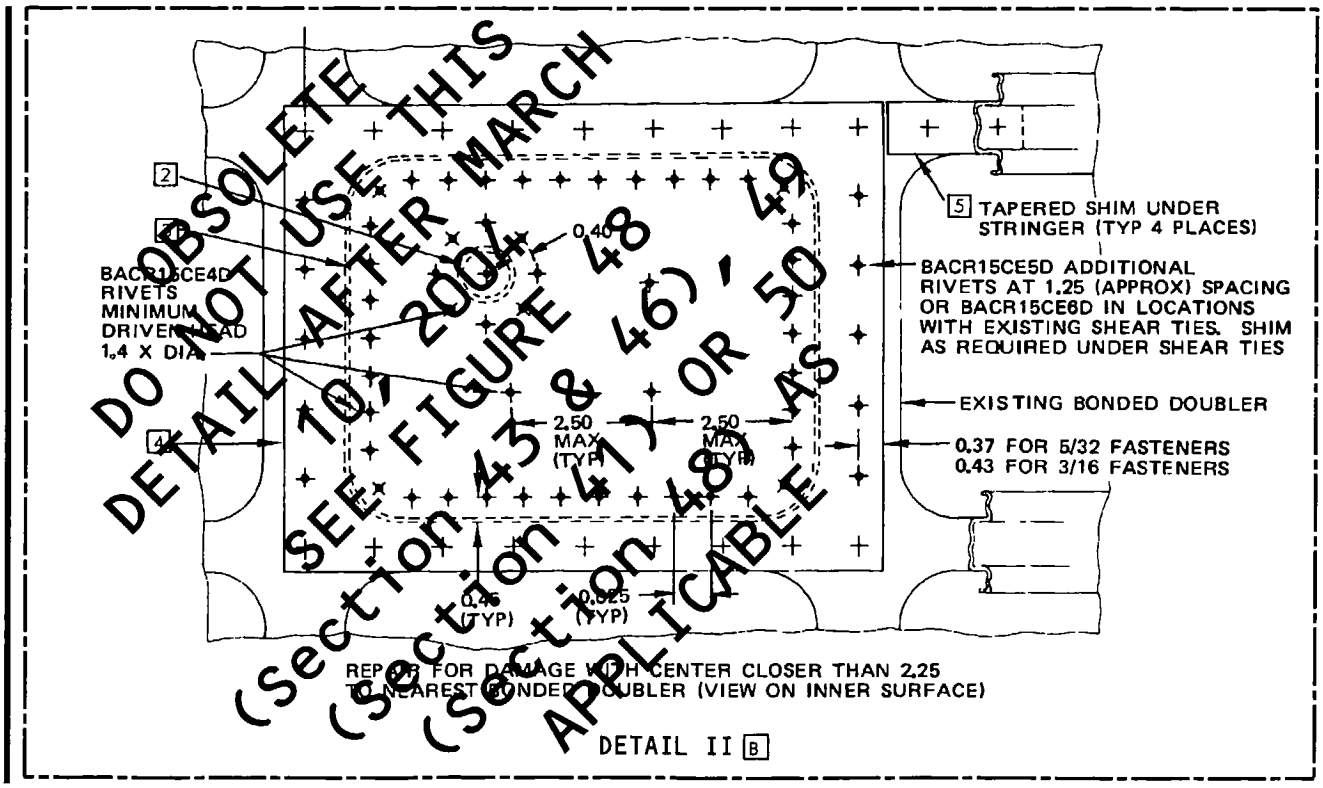

DETAIL II [B]

DO NOT USE THIS OBSOLETE DETAIL AFTER MARCH 10, 2004
SEE FIGURE 48 (Section 43 & 46), 49 (Section 41) OR 50 (Section 48) AS APPLICABLE

Fuselage Skin - Preferred Small Flush Repair for 0.036 Skin
Figure 18 (Sheet 2)

BOEING PROPRIETARY - Copyright © - Unpublished Work - See title page for details.

APPLICABILITY
THIS REPAIR IS PREFERRED TO THE BONDED REPAIR SHOWN IN FIG. 3.

REPAIR INSTRUCTIONS

1. Clean out damage to a rectangular hole with radiused corners. Deburr the edges of the hole.
2. Remove the existing fasteners as required.
3. Make the repair parts.
4. Alodize the cut edges of the skin and repair parts.
5. Install the repair parts making a faying surface seal with BMS 5-95 sealant as described in 53-30-4.
6. Form a fillet around the periphery of the internal doubler using the sealant squeezed out during installation. Apply additional sealant if required.
7. Restore the finish.

NOTES

- THIS IS A CATEGORY A REPAIR. THE INSPECTIONS GIVEN IN THE BASELINE ZONAL INSPECTION (BZI) ARE SUFFICIENT TO MAINTAIN THE DAMAGE TOLERANCE OF THE INITIAL STRUCTURE WITH THIS REPAIR INSTALLED. REFER TO 51-00-6 FOR REPAIR CATEGORIES, BZI DEFINITION AND REPAIR ASSESSMENT INFORMATION.
- THIS REPAIR WILL HAVE AN EFFECT ON THE STRUCTURAL SIGNIFICANT ITEM (SSI):
  - NUMBER F-39 IF EXTENDED OVER A STRINGER AND INSTALLED IN THE CROWN AREA, BUT THE INSPECTION ALTERNATIVES FOR F-39A THROUGH F-39H ARE STILL APPLICABLE
  - NUMBER F-41 WHEN INSTALLED UNDER THE WING-TO-BODY AND LOWER LOBE FAIRINGS, BUT THE INSPECTION ALTERNATIVES ARE STILL APPLICABLE.

  THEREFORE, NO NEW INSPECTION ALTERNATIVES ARE NECESSARY FOR THIS REPAIR. DO THE INSPECTIONS FOR F-39 AND F-41, IF NECESSARY, AT THE SUBSEQUENT SUPPLEMENTAL STRUCTURAL INSPECTION DOCUMENT (SSID) INSPECTION ON THIS AIRPLANE. REFER TO SRM 51-00-4, FIGURE 3 FOR THE APPLICABLE SSI INFORMATION.
- REFER TO THE FOLLOWING WHEN USING THIS REPAIR:
  - SRM 51-10-2 FOR PROTECTIVE TREATMENT OF METALS
  - SRM 51-30 FOR FASTENER CODE, REMOVAL AND INSTALLATION, HOLE SIZES AND EDGE MARGINS
  - SRM 51-70 FOR AERODYNAMIC SMOOTHNESS REQUIREMENTS
  - SRM 53-30-4 FOR SEALING OF FUSELAGE SKIN REPAIRS
  - AMM 51-21-0 FOR INTERIOR AND EXTERIOR FINISH
- BREAK SHARP EDGES OF ORIGINAL AND REPAIR PARTS 0.015 TO 0.030

FASTENER SYMBOLS

+ ORIGINAL FASTENER LOCATIONS

⊕ REPAIR FASTENER LOCATIONS

REPAIR MATERIAL			
PART		QTY	MATERIAL
1	FILLER	1	0.036 CLAD 2024-T3
2	FILLER	1	0.036 CLAD 2024-T3
3	DOUBLER	1	0.040 CLAD 2024-T3
4	TAPERED SHIM	4	0.036 CLAD 2024-T3

OBSOLETE AFTER JULY 10, 2003
DO NOT USE SEE FIGURE 48 OR FIGURE 49

Fuselage Skin with 0.036 Inch Thickness - Flush Repair for Damage Between Stringers
Figure 19 (Sheet 1)

BOEING PROPRIETARY - Copyright © - Unpublished Work - See title page for details.

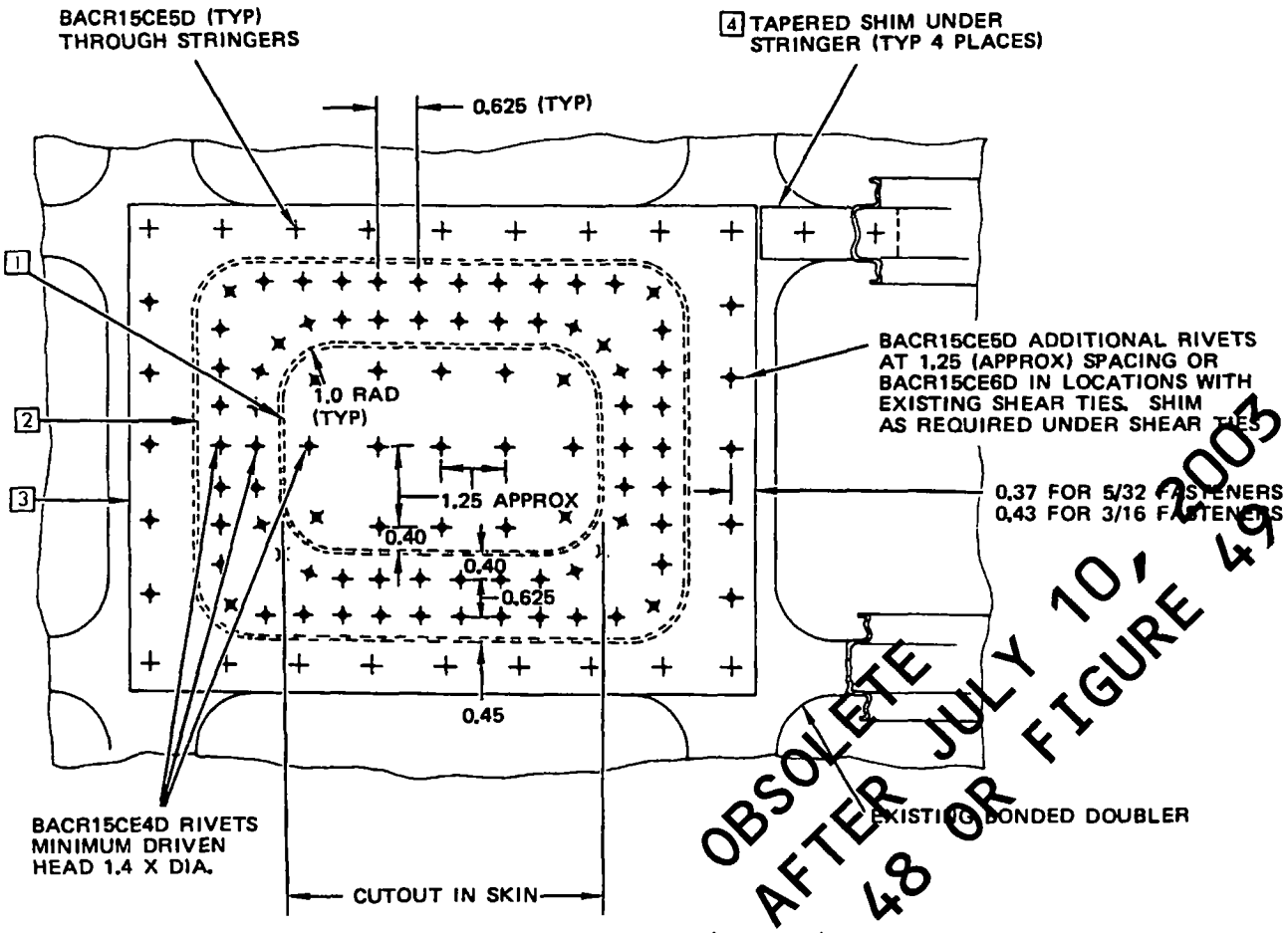

DO NOT USE AFTER JULY 10, 2003
SEE FIGURE 48 OR FIGURE 49
OBSOLETE

Fuselage Skin with 0.036 Inch Thickness - Flush Repair for Damage Between Stringers
Figure 19 (Sheet 2)

BOEING PROPRIETARY - Copyright © - Unpublished Work - See title page for details.

APPLICABILITY

THIS REPAIR APPLIES TO CRACKS IN THE AREA OF THE CUTOUT IN THE SKIN AND THE BONDED DOUBLER. TELL BOEING:

- IF A CRACK IS NOT IN THE AREA OF THE CUTOUT AS SHOWN IN DETAIL II
- IF THERE IS DELAMINATION BETWEEN THE SKIN AND THE BONDED DOUBLER
- IF THE BEAR STRAP IS CRACKED.

REPAIR INSTRUCTIONS

1. Remove the fasteners from the repair area.
2. Move the damaged skin and the doubler apart from the bear strap.
3. Cut out the damaged skin and the bonded doubler. See Detail II.
4. Do a High Frequency Eddy Current (HFEC) inspection on the cutout area to make sure there are no cracks. If there are no cracks, make the cutout larger by 0.04 inch. Refer to SRM 51-10-1 and NDT Part 6, 53-10-08.
5. Make the repair parts. See Table I.
6. Assemble the repair parts and drill the fastener holes. See Detail I.
7. Disassemble the repair parts.
8. Remove the nicks, scratches, gouges, burrs, and sharp edges from the skin and the repair parts.
9. Apply a chemical conversion coating to the bare surfaces of the skin, and to the part 2 filler and the part 3 filler. Refer to SRM 51-10-2.
10. Apply cadmium plating to the cres repair doubler. Refer to SRM 51-10-2.
11. Apply two layers of BMS 10-79, Type II primer to the doubler. Apply one layer of BMS 10-79, Type II primer to the part 2 filler and the part 3 filler. Apply one layer of BMS 10-79, Type II primer to the bare surfaces of the skin. Refer to SOPM 20-44-04.
12. Install repair washers in the countersunk holes in the skin panel. Refer to 51-30-8.
13. Install the repair parts with BMS 5-95 sealant between the faying surfaces. Install the non-aluminum fasteners wet with BMS 5-95 sealant in close reamed holes.
14. Apply the finish to the repair area. Refer to AMM 51-21.

NOTES

- THIS REPAIR IS CATEGORY B. THE CATEGORY B REPAIR HAS FAA APPROVAL IF YOU DO THE SUPPLEMENTAL INSPECTIONS GIVEN IN TABLE II. INCORPORATION OF THESE INSPECTION REQUIREMENTS INTO THE AIRPLANE'S MAINTENANCE PROGRAM SATISFIES THE DAMAGE TOLERANCE ASSESSMENT OF THE REPAIR SPECIFIED BY THE REPAIR ASSESSMENT PROGRAM. THIS ASSESSMENT CAN BE DONE AFTER YOU RELEASE THE AIRPLANE TO SERVICE. REFER TO SRM 51-00-6 FOR GENERAL DATA ABOUT THE REPAIR ASSESSMENT PROGRAM. REFER TO DETAIL III FOR THE INSPECTION AREA.
- THIS REPAIR WILL HAVE AN EFFECT ON THE STRUCTURALLY SIGNIFICANT ITEM (SSI):
  - NUMBER F-15A AND B, BUT THE SUPPLEMENTAL INSPECTIONS GIVEN IN TABLE II WILL MEET THE SSID INSPECTION REQUIREMENTS FOR F-15A IN THE REPAIR AREA. HOWEVER, A NEW INSPECTION METHOD IS NECESSARY TO REPLACE THE X-RAY INSPECTION OF F-15B. SEE TABLE III FOR NEW REQUIREMENTS FOR F-15B.

  DO THE INTERNAL MFEC AND VISUAL INSPECTIONS FOR F-15B, IF NECESSARY, AT THE SUBSEQUENT SUPPLEMENTAL STRUCTURAL INSPECTION DOCUMENT (SSID) INSPECTION ON THIS AIRPLANE. REFER TO SRM 51-00-4, FIG. 3, FOR THE APPLICABLE SSI DATA.
- ALL DIMENSIONS ARE IN INCHES.
- D = THE FASTENER DIAMETER
- ALL MACHINED SURFACES MUST HAVE A FINISH OF 125 MICROINCHES Ra.
- REFER TO FIG. 32 TO REPAIR THE FORWARD GALLEY DOOR LOWER HINGE CUTOUT.
- WHEN YOU USE THIS REPAIR REFER TO:
  - AMM 51-21 FOR INTERIOR AND EXTERIOR FINISHES
  - SOPM 20-44-04 FOR APPLICATION OF URETHANE COMPATIBLE FINISHES
  - SRM 51-00-6 FOR REPAIR CATEGORIES, DEFINITIONS AND REPAIR ASSESSMENT PROGRAM INFORMATION
  - SRM 51-10-1 FOR INSPECTION AND REMOVAL OF DAMAGE
  - SRM 51-10-2 FOR PROTECTIVE TREATMENT OF METAL
  - SRM 51-20-4 FOR REPAIR SEALING
  - SRM 51-30 FOR FASTENER CODE, REMOVAL, INSTALLATION, HOLE SIZES AND EDGE MARGINS
  - SRM 51-30-8 FOR COUNTERSINKING AND USE OF COUNTERSINK REPAIR WASHER
  - SRM 51-70 FOR AERODYNAMIC SMOOTHNESS.

Skin and Bonded Doubler Repair - Forward Galley Door Upper Hinge Cutout
Figure 20 (Sheet 1)

BOEING PROPRIETARY - Copyright © - Unpublished Work - See title page for details.
C69697

NOTES (CONTINUED)

[A] THE THICKNESS OF THE PART 3 FILLER MUST BE THE SAME AS THE THICKNESS OF THE DAMAGED SKIN AND BONDED DOUBLER OR THE DAMAGED SKIN ONLY.

[B] THE THICKNESS OF THE PART 2 FILLER MUST BE THE SAME AS THE UPPER SKIN.

[C] DO NOT CHAMFER THE AFT EDGE OF PART 1 DOUBLER.

[D] IF THE AIRPLANE HAS LESS THAN 66,000 FLIGHT CYCLES, THE INSPECTION THRESHOLD IS THE EARLIER OF:

- THE INITIAL SCHEDULED INSPECTION AS GIVEN IN THE OPERATOR'S REPAIR ASSESSMENT PROGRAM (RAP)
- 66,000 FLIGHT CYCLES.

IF THE AIRPLANE HAS MORE THAN 66,000 FLIGHT CYCLES AND THE INITIAL SCHEDULED SUPPLEMENTAL STRUCTURAL INSPECTION DOCUMENT (SSID) INSPECTION HAS BEEN PERFORMED, THE INSPECTION THRESHOLD IS:

- THE NEXT SCHEDULED SSID INSPECTION FOR THE STRUCTURALLY SIGNIFICANT ITEM F-15A IN THE REPAIRED AREA.

[E] IF THE AIRPLANE HAS MORE THAN 60,000 FLIGHT CYCLES, DO THE INSPECTION WITHIN 4,000 CYCLES AFTER REPAIR INSTALLATION.ID INSPECTION FOR F-15 ON THIS AIRPLANE.

FASTENER SYMBOLS

REFERENCE FASTENER LOCATION

INITIAL FASTENER LOCATION
INSTALL A BACB30KF6A HEX DRIVE BOLT WITH A BACC30R COLLAR.

INITIAL FASTENER LOCATION
INSTALL A BACB30FQ6A HEX DRIVE BOLT WITH A A BACC30R COLLAR.

INITIAL FASTENER LOCATION
INSTALL A BACB30LH-2 BOLT WITH A BACN10JC-08 NUT AND AN AN960-C8 WASHER.

REPAIR FASTENER LOCATION
INSTALL A BACB30KF8A HEX DRIVE BOLT WITH A BACC30M COLLAR.

REPAIR MATERIAL			
PART		QTY	MATERIAL
1	DOUBLER	1	0.063 CRES 301 1/2 HARD MIL-S-5059
2	FILLER	1	2024-T4 [B] CLAD
3	FILLER	1	2024-T3 [A] CLAD

TABLE I

Skin and Bonded Doubler Repair - Forward Galley Door Upper Hinge Cutout
Figure 20 (Sheet 2)

BOEING PROPRIETARY - Copyright © - Unpublished Work - See title page for details.

SUBSEQUENT INSPECTIONS ARE NECESSARY FOR CATEGORY B REPAIR. REFER TO TABLE II FOR INSPECTION REQUIREMENTS.

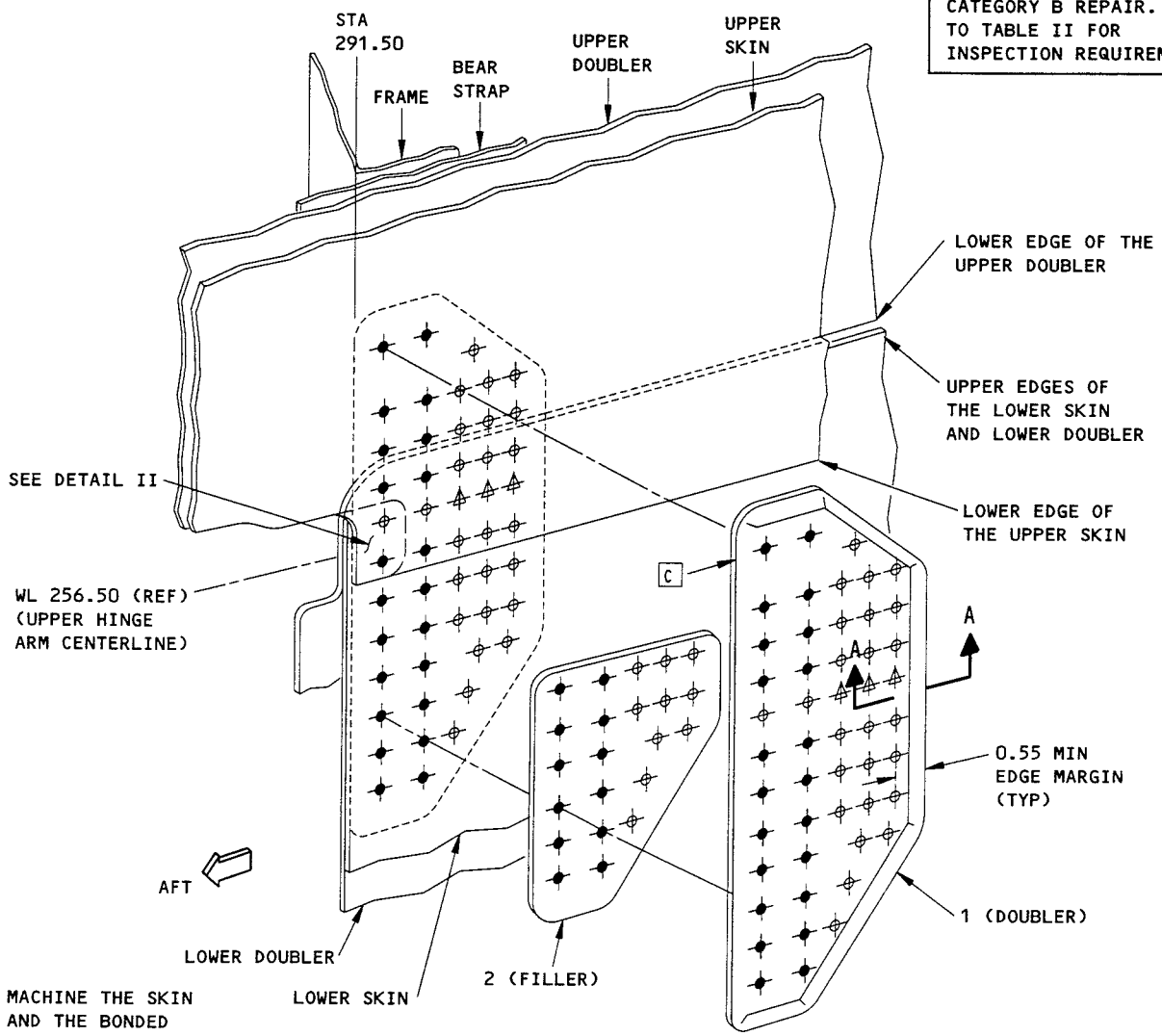

UPPER HINGE REPAIR
DETAIL I

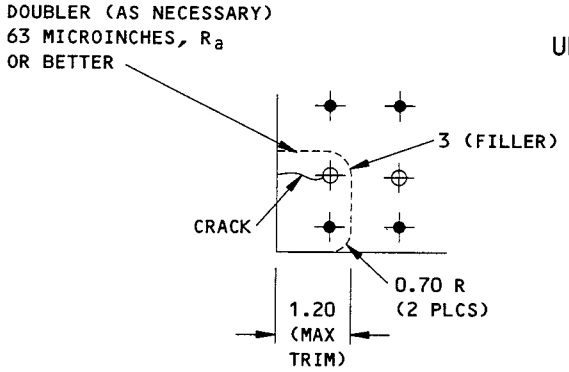

SKIN CRACK REPAIR
DETAIL II

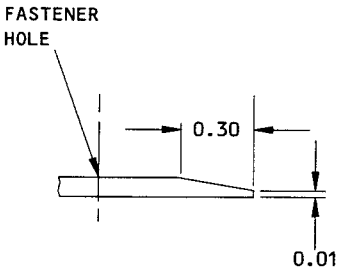

SECTION A-A
TYPICAL EDGE CHAMFER

Skin and Bonded Doubler Repair - Forward Galley Door Upper Hinge Cutout
Figure 20 (Sheet 3)

BOEING PROPRIETARY - Copyright © - Unpublished Work - See title page for details.

CATEGORY B REPAIR AND SSI F-15A INSPECTION REQUIREMENTS			
INSPECTION THRESHOLD	REPEAT INSPECTION ALTERNATIVES		
	METHOD	INTERVAL	REFERENCES
D	DETAILED VISUAL	4,000 FLIGHT CYCLES	
	MEDIUM FREQUENCY EDDY CURRENT (MFEC)	15,000 FLIGHT CYCLES	737 NDT, PART 6, 53-30-00, FIG. 6
	DETAILED VISUAL		

NOTE:

1) AT EVERY 4.000 FLIGHT CYCLES:
   - DO A DETAILED VISUAL INSPECTION OF THE UPPER AND LOWER SKINS EXTERNALLY AROUND THE PART 1 DOUBLER AND PART 2 FILLER AS SHOWN IN DETAIL III.
2) AT EVERY 15.000 FLIGHT CYCLES:
   - DO AN MFEC INSPECTION OF THE BEARSTRAP INTERNALLY AT THE UPPER ROW AND INTERNALLY (OR EXTERNALLY) AT THE LOWER ROW OF THE REPAIR PART AS SHOWN IN DETAIL III.
   - DO A DETAILED VISUAL INSPECTION OF THE FRAME WEB INTERNALLY AS SHOWN IN DETAIL III.

TABLE II

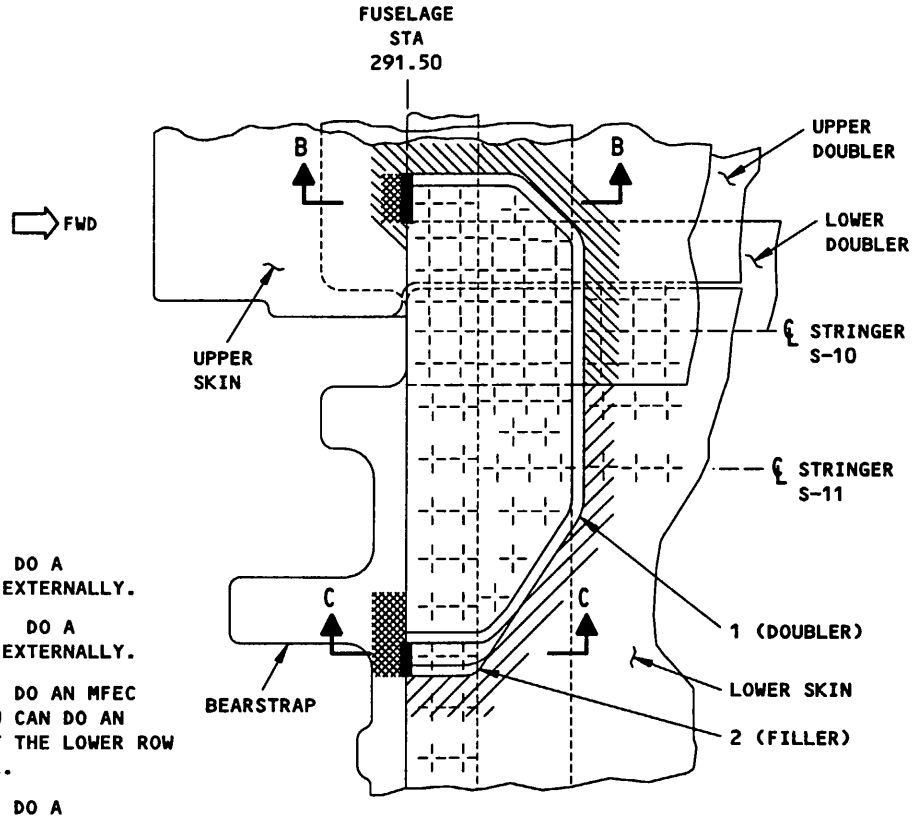

UPPER SKIN INSPECTION AREA. DO A DETAILED VISUAL INSPECTION EXTERNALLY.

LOWER SKIN INSPECTION AREA. DO A DETAILED VISUAL INSPECTION EXTERNALLY.

BEARSTRAP INSPECTION AREA. DO AN MFEC INSPECTION INTERNALLY. YOU CAN DO AN EXTERNAL MFEC INSPECTION AT THE LOWER ROW IF THE BEARSTRAP IS VISIBLE.

FRAME WEB INSPECTION AREA. DO A DETAILED VISUAL INSPECTION INTERNALLY.

INSPECTION AREAS FOR DETAIL I

DETAIL III

Skin and Bonded Doubler Repair - Forward Galley Door Upper Hinge Cutout
Figure 20 (Sheet 4)

BOEING PROPRIETARY - Copyright © - Unpublished Work - See title page for details.

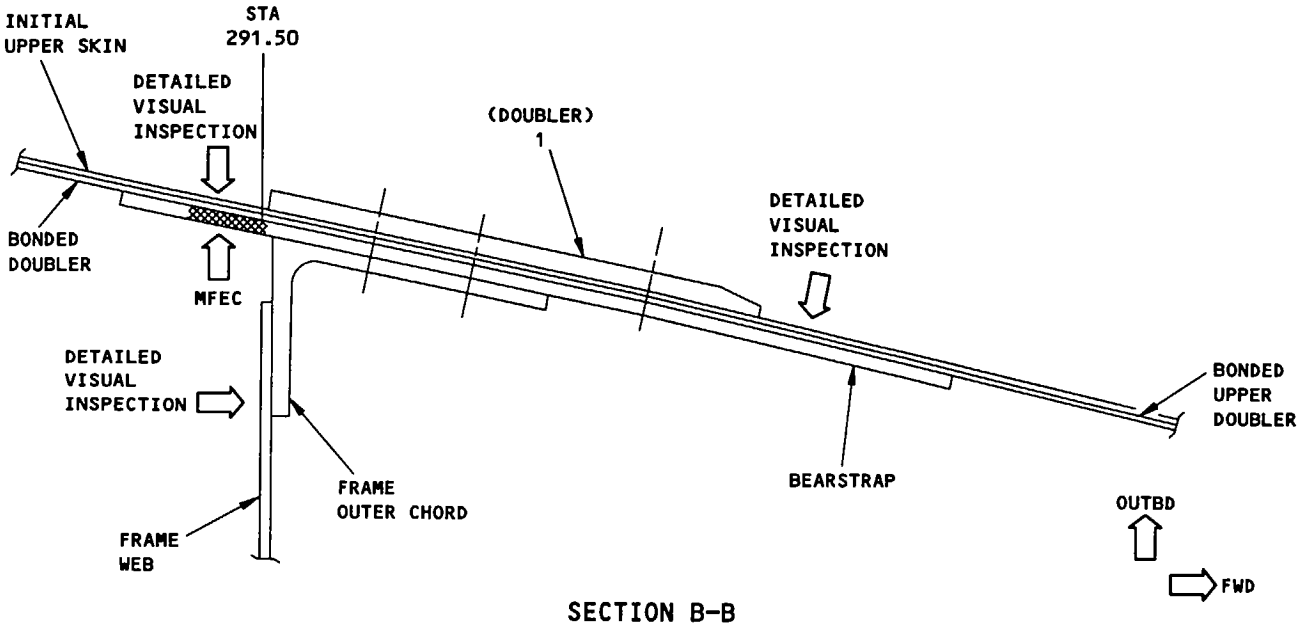

SECTION B-B

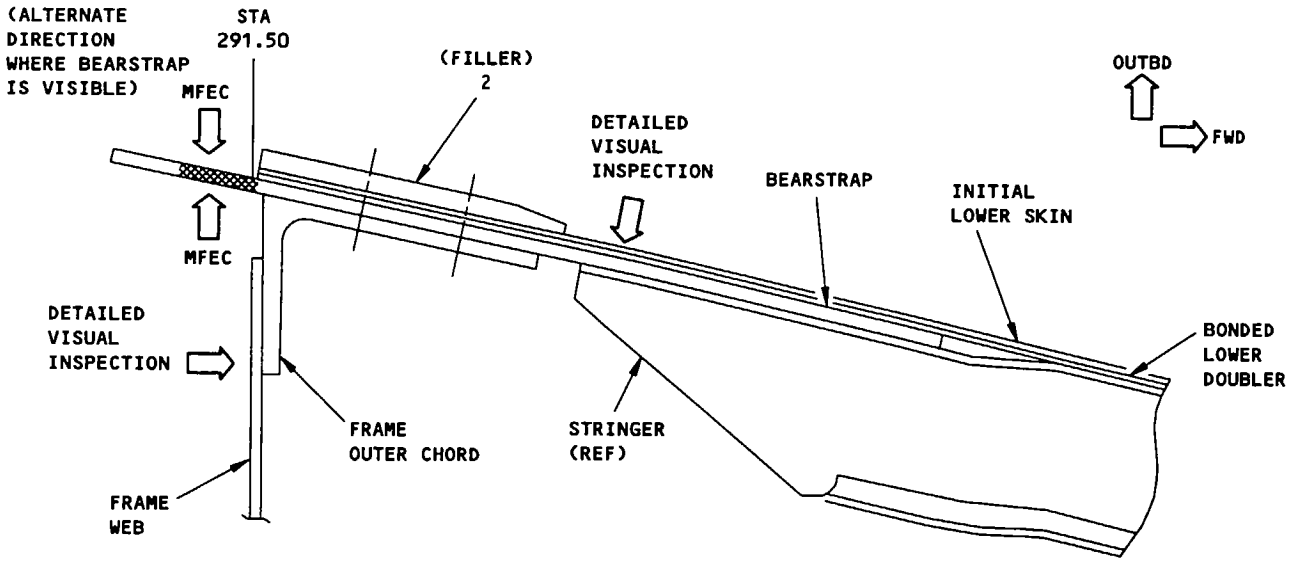

SECTION C-C

Skin and Bonded Doubler Repair - Forward Galley Door Upper Hinge Cutout
Figure 20 (Sheet 5)

BOEING PROPRIETARY - Copyright © - Unpublished Work - See title page for details.

SSI NUMBER F-15B INSPECTION REQUIREMENTS			
INSPECTION THRESHOLD	REPEAT INSPECTION		
	METHOD	INTERVAL	REFERENCE
66,000 FLIGHT CYCLES AFTER AIRPLANE DELIVERY E	HIGH FREQUENCY EDDY CURRENT (HFEC)	20,000 FLIGHT CYCLES	737 NDT, D6-37239, PART 6, 51-00-00, FIG. 4 OR 23
NOTE: INSPECT THE FRAME CHORD WITH HFEC METHOD INTERNALLY IN THE REPAIR AREA AS SHOWN IN DETAIL IV. IN ADDITION, INSPECT THE SKIN, BEARSTRAP, FRAMES AND SILLS PER THE EXISTING INTERNAL INSPECTIONS GIVEN IN THE 737 SSID DOCUMENT FOR F-15B.			

TABLE III

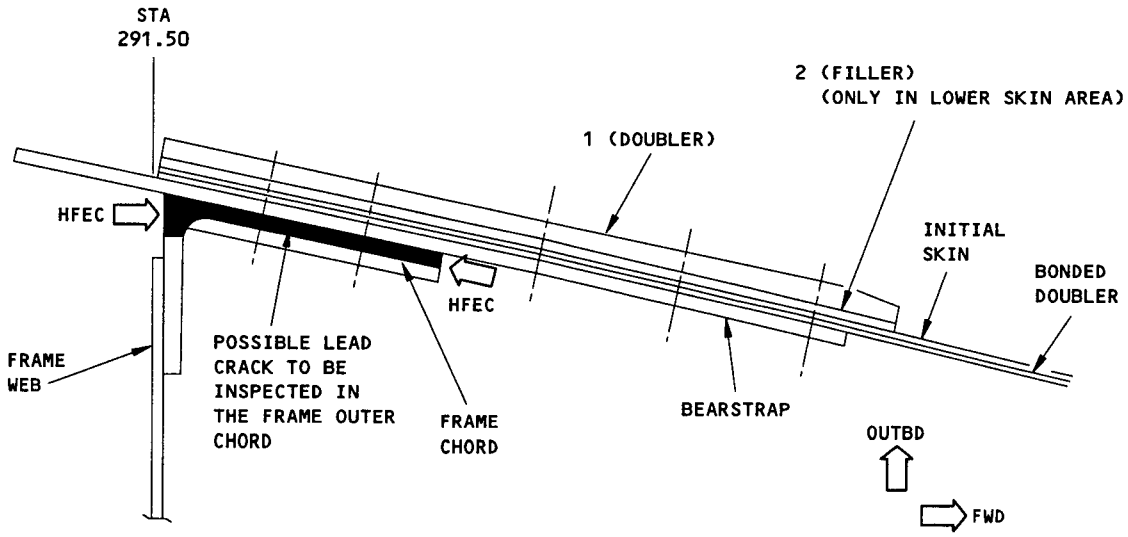

TYPICAL INSPECTION ALTERNATIVE FOR F-15B

DETAIL IV

Skin and Bonded Doubler Repair - Forward Galley Door Upper Hinge Cutout
Figure 20 (Sheet 6)

BOEING PROPRIETARY - Copyright © - Unpublished Work - See title page for details.

APPLICABILITY

THIS REPAIR APPLIES TO CRACKS IN THE AREA OF THE CUTOUT IN THE SKIN AND THE BONDED DOUBLER. TELL BOEING:

- IF A CRACK IS NOT IN THE AREA OF THE CUTOUT AS SHOWN IN DETAIL III AND DETAIL IV
- IF THERE IS DELAMINATION BETWEEN THE SKIN AND THE BONDED DOUBLER
- IF THE BEAR STRAP IS CRACKED.

REPAIR INSTRUCTIONS

1. Remove the fasteners from the repair area.
2. Move the damaged skin and the bonded doubler apart from the bear strap.
3. Cut out the damaged skin and the bonded doubler. See Detail II [B] or Detail IV [C].
4. Do a high frequency eddy current test on the cutout area to make sure there are no cracks. If there are no cracks, make the cutout larger by 0.04 inch. Refer to SRM 51-10-1 in the 737 SRM and SRM 53-10-39 of the 737 NDT manual.
5. Make the repair parts. See Table I.
6. Assemble the repair parts and drill the fastener holes. See Detail I [B] or Detail III [C].
7. Disassemble the repair parts.
8. Remove the nicks, scratches, gouges, burrs, and sharp edges from the skin and the repair parts.
9. Apply a chemical conversion coating to the bare surfaces of the skin, to the bonded doubler, and the fillers. Refer to SRM 51-10-2.
10. Apply cadmium plating to the cres repair doubler. Refer to SRM 51-10-2.
11. Apply two layers of BMS 10-79, Type II primer to the doubler. Apply one layer of BMS 10-79, Type II primer to the fillers. Apply one layer of BMS 10-79, Type II primer to the bare surfaces of the skin. Refer to SOPM 20-44-04.
12. Install repair washers in the countersunk holes in the skin panel. Refer to SRM 51-30-8.
13. Install the repair parts with BMS 5-95 sealant between the faying surfaces. Install the non-aluminum fasteners wet with BMS 5-95 sealant in close reamed holes.
14. Apply the finish to the repair area. Refer to AMM 51-21.

NOTES

- THESE REPAIRS (DETAIL I AND III) ARE CATEGORY B REPAIRS. THE CATEGORY B REPAIR HAS FAA APPROVAL IF YOU DO THE SUPPLEMENTAL INSPECTIONS GIVEN IN TABLE II. INCORPORATION OF THESE INSPECTION REQUIREMENTS INTO THE AIRPLANE'S MAINTENANCE PROGRAM SATISFIES THE DAMAGE TOLERANCE ASSESSMENT OF THE REPAIR SPECIFIED BY THE REPAIR ASSESSMENT PROGRAM. THIS ASSESSMENT CAN BE DONE AFTER YOU RELEASE THE AIRPLANE TO SERVICE. REFER TO SRM 51-00-6 FOR GENERAL DATA ABOUT THE REPAIR ASSESSMENT PROGRAM. REFER TO DETAIL V OR VI AS APPLICABLE FOR THE INSPECTION AREA.
- THESE REPAIRS (DETAIL I AND III) WILL HAVE AN EFFECT ON THE STRUCTURAL SIGNIFICANT ITEM (SSI):
  - NUMBER F-13 OR F-14, BUT THE SUPPLEMENTAL INSPECTIONS GIVEN IN TABLE II WILL MEET THE SSID INSPECTION REQUIREMENTS FOR F-13A AND F-14A IN THE REPAIR AREA. HOWEVER, A NEW INSPECTION METHOD IS NECESSARY TO REPLACE THE EXTERNAL LFEC INSPECTION OF F-13B AND F-14B. SEE TABLE III FOR NEW REQUIREMENTS FOR F-13B AND F-14B.

  DO THE INTERNAL HFEC AND VISUAL INSPECTIONS FOR F-13B OR F-14B, IF NECESSARY, AT THE SUBSEQUENT SUPPLEMENTAL STRUCTURAL INSPECTION DOCUMENT (SSID) INSPECTION ON THE AIRPLANE. REFER TO SRM 51-00-4, FIG. 3, FOR THE APPLICABLE SSI DATA.
- D = THE FASTENER DIAMETER
- ALL DIMENSIONS ARE IN INCHES.
- ALL MACHINED SURFACES MUST HAVE A FINISH OF 125 MICROINCHES Ra, UNLESS A DIFFERENT FINISH IS SPECIFIED.
- REFER TO FIG. 31 TO REPAIR THE FORWARD ENTRY DOOR LOWER HINGE CUTOUT.
- WHEN YOU USE THIS REPAIR REFER TO:
  - AMM 51-21 FOR INTERIOR AND EXTERIOR FINISHES
  - SOPM 20-44-04 FOR APPLICATION OF URETHANE COMPATIBLE FINISHES
  - SRM 51-00-6 FOR REPAIR CATEGORIES, DEFINITIONS AND REPAIR ASSESSMENT PROGRAM DATA
  - SRM 51-10-1 FOR INSPECTION AND REMOVAL OF DAMAGE
  - SRM 51-10-1 FOR PROTECTIVE TREATMENT OF METAL
  - SRM 51-20-4 FOR REPAIR SEALING
  - SRM 51-30 FOR FASTENER CODE, REMOVAL, INSTALLATION, HOLE SIZES AND EDGE MARGINS
  - SRM 51-30-8 FOR COUNTERSINKING AND USE OF COUNTERSINK REPAIR WASHER
  - SRM 51-70 FOR AERODYNAMIC SMOOTHNESS.

Skin and Bonded Doubler Repair - Forward Entry Door Upper Hinge Cutout
Figure 21 (Sheet 1)

BOEING PROPRIETARY - Copyright © - Unpublished Work - See title page for details.

NOTES (CONTINUED)

[A] THE THICKNESS OF THE FILLER MUST BE THE SAME AS THE THICKNESS OF THE DAMAGED SKIN AND BONDED DOUBLER.

[B] FOR CUM LINE NUMBERS: 1 THRU 997.

[C] FOR CUM LINE NUMBERS: 998 AND ON.

[D] DO NOT CHAMFER THE AFT EDGE OF PART 1 DOUBLER.

[E] IF THE AIRPLANE HAS MORE THAN 66,000 FLIGHT CYCLES, DO THE NEW INSPECTION ALTERNATIVE AT THE SUBSEQUENT SCHEDULED SSID INSPECTION FOR F-13 OR F-14 ON THIS AIRPLANE.

[F] IF THE AIRPLANE HAS LESS THAN 66,000 FLIGHT CYCLES, THE INSPECTION THRESHOLD IS THE EARLIER OF:

- THE INITIAL SCHEDULED INSPECTION AS GIVEN IN THE OPERATOR'S REPAIR ASSESSMENT PROGRAM (RAP)
- 66,000 FLIGHT CYCLES.

IF THE AIRPLANE HAS MORE THAN 66,000 FLIGHT CYCLES AND THE INITIAL SCHEDULED SUPPLEMENTAL STRUCTURAL INSPECTION DOCUMENT (SSID) INSPECTION HAS BEEN PERFORMED, THE INSPECTION THRESHOLD IS:

- THE NEXT SCHEDULED SSID INSPECTION FOR THE STRUCTURALLY SIGNIFICANT ITEMS F-13A AND F-14A IN THE REPAIRED AREA.

FASTENER SYMBOLS

REFERENCE FASTENER LOCATION

INITIAL FASTENER LOCATION
INSTALL A BACB30KF6A HEX DRIVE BOLT WITH A BACC30R COLLAR.

INITIAL FASTENER LOCATION
INSTALL A BACB30FQ6A HEX DRIVE BOLT WITH A BACC30M COLLAR

INITIAL FASTENER LOCATION
INSTALL A BACB30FN6A HEX DRIVE BOLT WITH A BACC30M COLLAR

REPAIR FASTENER LOCATION
INSTALL A BACB30FN6A HEX DRIVE BOLT WITH A BACC30M COLLAR

INITIAL FASTENER LOCATION
INSTALL A BACB30LH-3 BOLT WITH A BACN10JC-3 NUT AND AN AN960-C10 WASHER

INITIAL FASTENER LOCATION
INSTALL A BACB30FN8A HEX DRIVE BOLT WITH A BACC30M COLLAR

REPAIR MATERIAL			
PART		QTY	MATERIAL
1	DOUBLER	1	0.063 CRES 301 1/2 HARD MIL-S-5059
2	FILLER	1	2024-T4 [A] CLAD
3	FILLER	1	2024-T3 [A] CLAD

TABLE I

Skin and Bonded Doubler Repair - Forward Entry Door Upper Hinge Cutout
Figure 21 (Sheet 2)

BOEING PROPRIETARY - Copyright © - Unpublished Work - See title page for details.

SUBSEQUENT INSPECTIONS ARE NECESSARY FOR CATEGORY B REPAIRS. REFER TO TABLE II FOR INSPECTION REQUIREMENTS

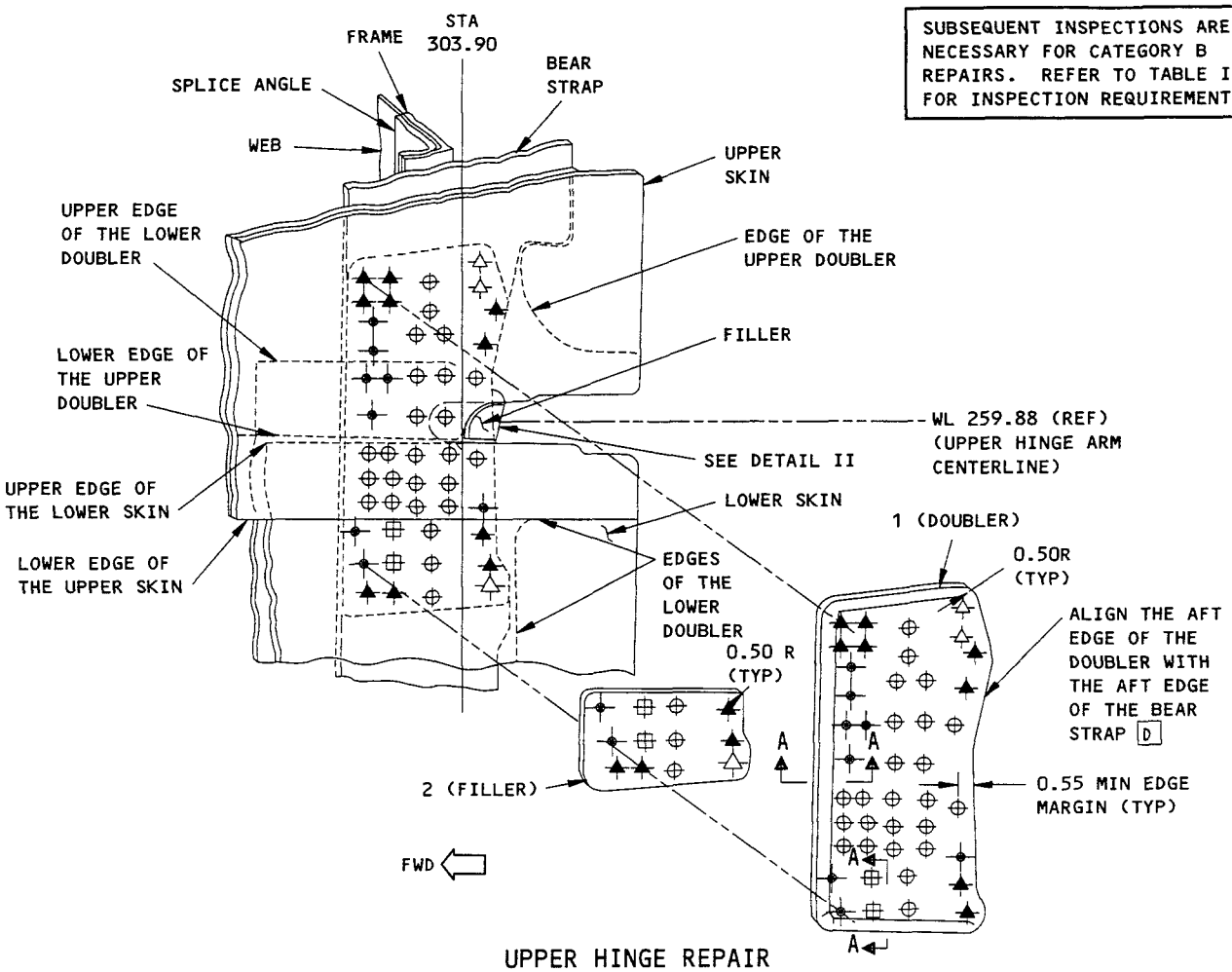

UPPER HINGE REPAIR
DETAIL I B

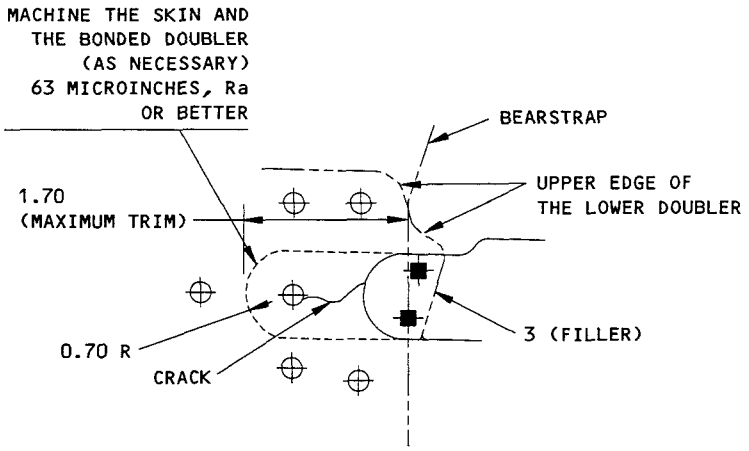

SKIN CRACK REPAIR
DETAIL II B

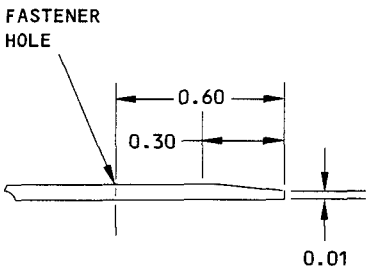

SECTION A-A
(TYPICAL EDGE CHAMFER)

Skin and Bonded Doubler Repair - Forward Entry Door Upper Hinge Cutout
Figure 21 (Sheet 3)

BOEING PROPRIETARY - Copyright © - Unpublished Work - See title page for details.

SUBSEQUENT INSPECTIONS ARE NECESSARY FOR CATEGORY B REPAIRS. REFER TO TABLE II FOR INSPECTION REQUIREMENTS

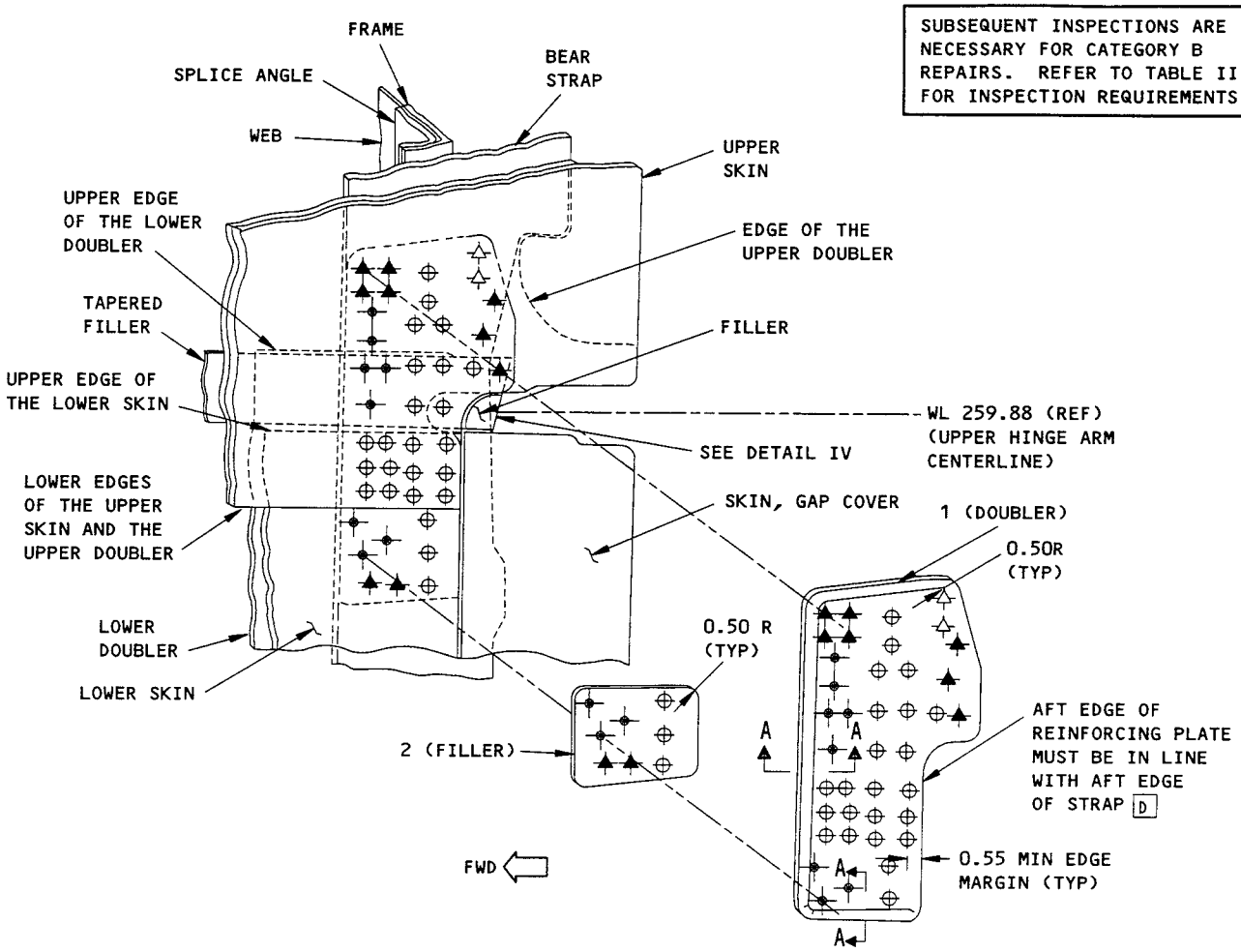

UPPER HINGE REPAIR
DETAIL III C

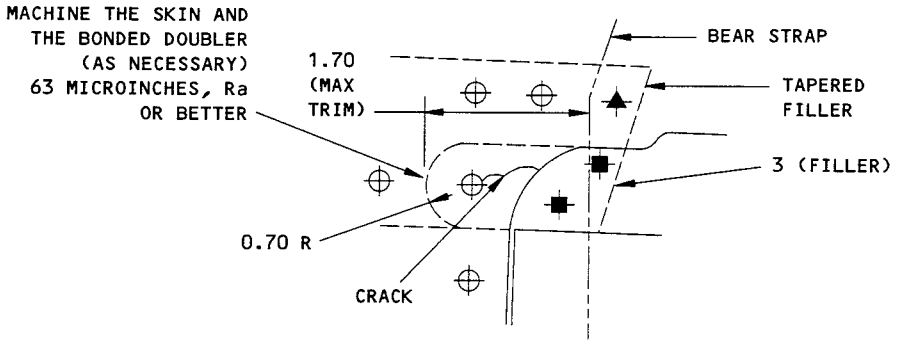

SKIN CRACK REPAIR
DETAIL IV C

Skin and Bonded Doubler Repair - Forward Entry Door Upper Hinge Cutout
Figure 21 (Sheet 4)

BOEING PROPRIETARY - Copyright © - Unpublished Work - See title page for details.

CATEGORY B REPAIR AND SSI F-13A AND F-14A INSPECTION REQUIREMENTS			
INSPECTION THRESHOLD	REPEAT INSPECTION ALTERNATIVES		
	METHOD	INTERVAL	REFERENCES
F	DETAILED VISUAL	4,000 FLIGHT CYCLES	
	MEDIUM FREQUENCY EDDY CURRENT (MFEC)	15,000 FLIGHT CYCLES	737 NDT, PART 6, 53-30-00, FIG. 6
	DETAILED VISUAL		

NOTE:
1) AT EVERY 4,000 FLIGHT CYCLES:
- DO A DETAILED VISUAL INSPECTION OF THE UPPER AND LOWER SKINS EXTERNALLY AROUND THE PART 1 DOUBLER AND PART 2 FILLER AS SHOWN IN DETAIL V OR VI AS APPLICABLE.

2) AT EVERY 15,000 FLIGHT CYCLES:
- DO AN MFEC INSPECTION OF THE BEARSTRAP INTERNALLY AT THE UPPER ROW AND INTERNALLY (OR EXTERNALLY) AT THE LOWER ROW OF THE REPAIR PART AS SHOWN IN DETAIL V OR VI AS APPLICABLE.
- DO A DETAILED VISUAL INSPECTION OF THE FRAME WEB INTERNALLY AS SHOWN IN DETAIL V OR VI AS APPLICABLE.

TABLE II

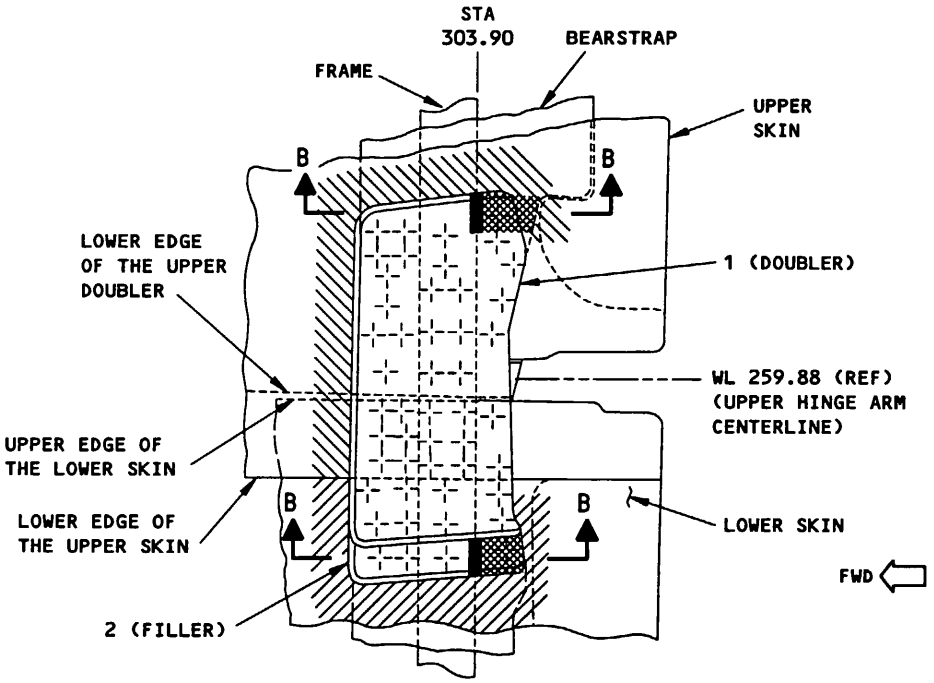

UPPER SKIN INSPECTION AREA. DO A DETAILED VISUAL INSPECTION EXTERNALLY.

LOWER SKIN INSPECTION AREA. DO A DETAILED VISUAL INSPECTION EXTERNALLY.

BEARSTRAP INSPECTION AREA. DO AN MFEC INSPECTION INTERNALLY.

FRAME WEB INSPECTION AREA. DO A DETAILED VISUAL INSPECTION INTERNALLY.

INSPECTION AREA FOR DETAIL I
DETAIL V B

Skin and Bonded Doubler Repair - Forward Entry Door Upper Hinge Cutout
Figure 21 (Sheet 5)

BOEING PROPRIETARY - Copyright © - Unpublished Work - See title page for details.

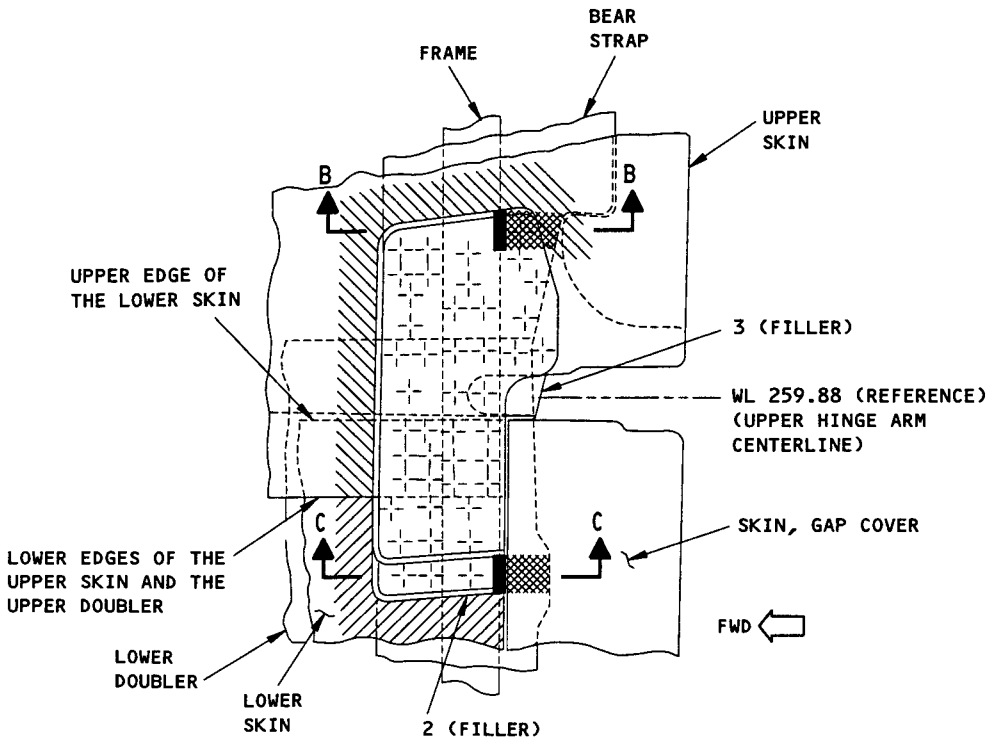

UPPER SKIN INSPECTION AREA. DO A DETAILED VISUAL INSPECTION EXTERNALLY.

LOWER SKIN INSPECTION AREA. DO A DETAILED VISUAL INSPECTION EXTERNALLY.

BEARSTRAP INSPECTION AREA. DO AN MFEC INSPECTION INTERNALLY (OR EXTERNALLY AT THE LOWER ROW IF THE GAP COVER SKIN IS REMOVED).

FRAME WEB INSPECTION AREA. DO A DETAILED VISUAL INSPECTION INTERNALLY.

INSPECTION AREA FOR DETAIL III
DETAIL VI C

Skin and Bonded Doubler Repair - Forward Entry Door Upper Hinge Cutout
Figure 21 (Sheet 6)

BOEING PROPRIETARY - Copyright © - Unpublished Work - See title page for details.

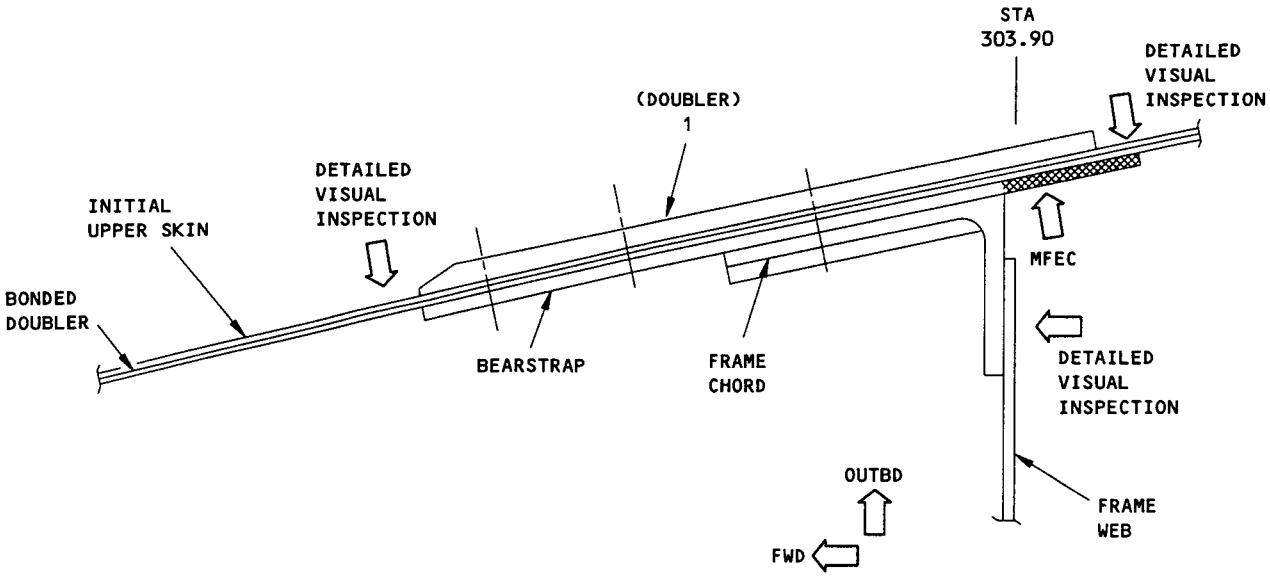

SECTION B-B

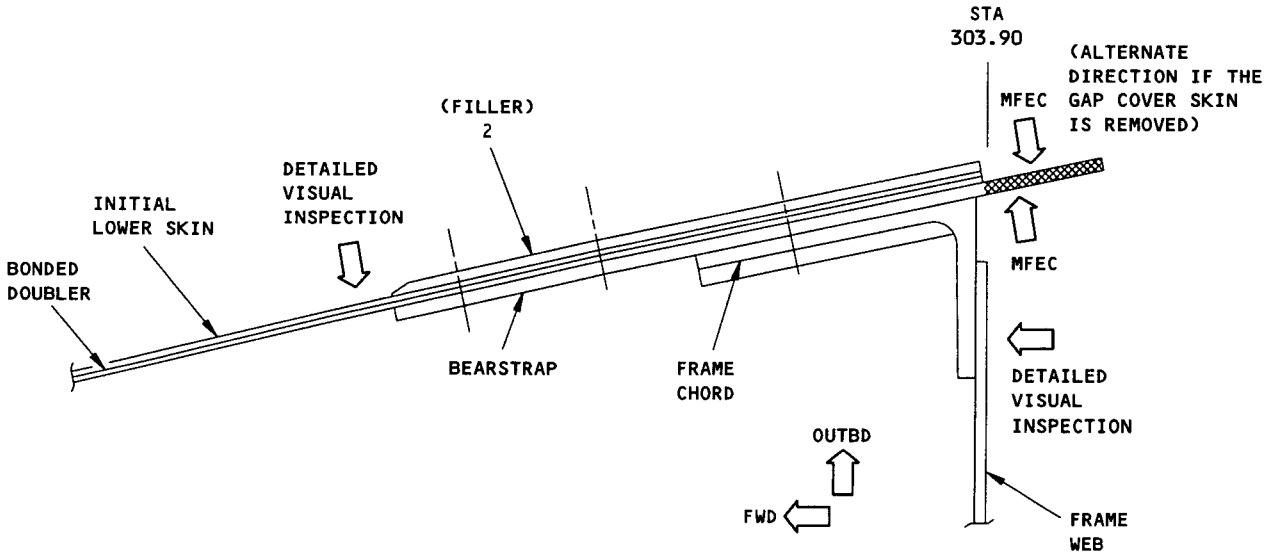

SECTION C-C

Skin and Bonded Doubler Repair - Forward Entry Door Upper Hinge Cutout
Figure 21 (Sheet 7)

BOEING PROPRIETARY - Copyright © - Unpublished Work - See title page for details.

SSI NUMBER F-13B AND F-14B INSPECTION REQUIREMENTS			
INSPECTION THRESHOLD	REPEAT INSPECTION		
	METHOD	INTERVAL	REFERENCE
66,000 FLIGHT CYCLES AFTER AIRPLANE DELIVERY [E]	HIGH FREQUENCY EDDY CURRENT (HFEC)	20,000 FLIGHT CYCLES	737 NDT, D6-37239 PART 6, 51-00-00, FIG. 4 OR 23
NOTE: INSPECT THE FRAME CHORD WITH HFEC METHOD INTERNALLY IN THE REPAIR AREA AS SHOWN IN DETAIL VII. IN ADDITION, INSPECT THE SKIN, BEARSTRAP, FRAMES AND SILLS PER THE EXISTING INTERNAL INSPECTIONS GIVEN IN THE 737 SSID DOCUMENT FOR F-13B AND F-14B.			

TABLE III

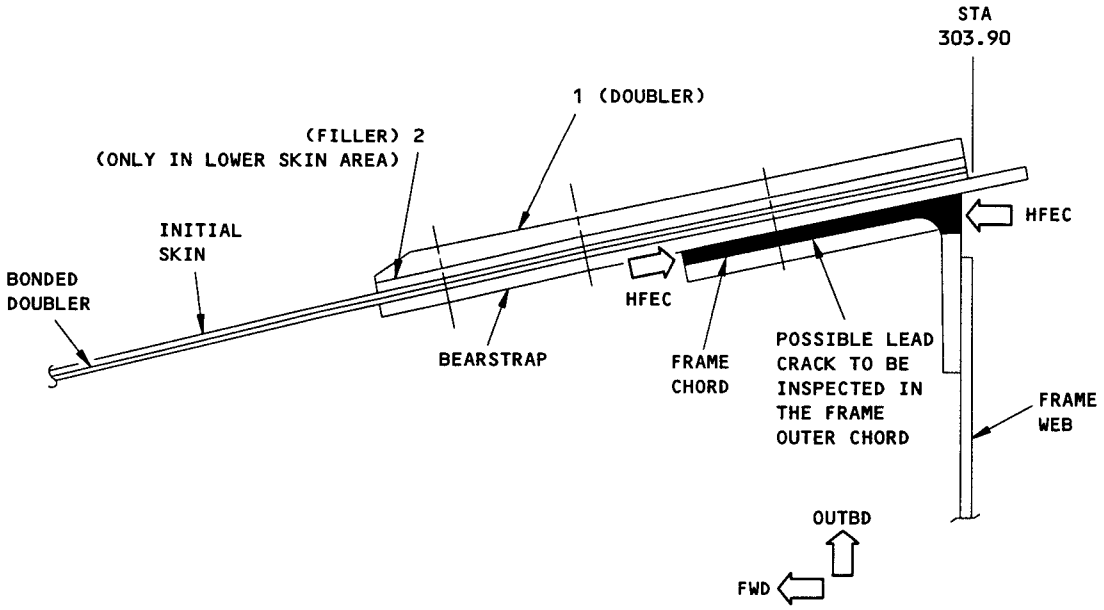

TYPICAL ALTERNATIVE INSPECTIONS FOR F-13B AND F-14B
DETAIL VII

Skin and Bonded Doubler Repair - Forward Entry Door Upper Hinge Cutout
Figure 21 (Sheet 8)

BOEING PROPRIETARY - Copyright © - Unpublished Work - See title page for details.

APPLICABILITY

THIS REPAIR APPLIES TO CRACKS IN THE AREA OF THE UPPER HINGE CUTOUT IN THE SKIN AND THE BONDED DOUBLER. CONTACT BOEING BEFORE YOU DO A REPAIR:

- IF THE CRACK EXTENDS PAST THE AREA OF THE CUTOUT SHOWN IN VIEW A.
- IF THERE IS DELAMINATION BETWEEN THE SKIN AND THE BONDED DOUBLER
- IF THE BEARSTRAP IS CRACKED.

REPAIR INSTRUCTIONS

1. Remove the fasteners from the repair area as necessary.
2. Move the damaged skin and the doubler apart from the bearstrap.
3. Insert a sheet metal guard between the doubler and bearstrap, if necessary.
4. Carefully cut out the damaged skin and the bonded doubler. See View A.
5. Do a High Frequency Eddy Current (HFEC) inspection on the cutout area to make sure there are no cracks. If there are no cracks, make the cutout larger by 0.04 inch. Refer to NDT Part 6, 51-00-00.
6. Make the repair parts given in Table I and shown in Detail I or II as applicable. Make the surface contour of the repair parts the same as the surface contour of the skin panel.
7. Assemble the repair parts. See Detail I or II as applicable.
8. Drill the fastener holes.
9. Disassemble the repair parts.
10. Remove the nicks, scratches, gouges, burrs, and sharp edges from the initial parts and the repair parts.
11. Apply a chemical conversion coating to the bare surfaces of the initial parts, and to the part 2 filler. Refer to SRM 51-10-2.
12. Apply cadmium plating to the part 1 plate. Refer to SRM 51-10-2.
13. Apply two layers of BMS 10-79, Type II primer to the part 1 plate. Apply one layer of BMS 10-79, Type II primer to the part 2 filler, and the bare surfaces of the initial parts. Refer to SOPM 20-44-04.
14. Install repair washers in the countersunk holes in the skin panel. Refer to SRM 51-30-8.
15. Install the repair parts with BMS 5-95 sealant between the faying surfaces. Refer to SRM 51-20-4.
16. Install the fasteners wet with BMS 5-95 sealant in close reamed holes.
17. Apply a fillet seal with BMS 5-95 sealant along the edges of the repair parts. Refer to SRM 51-20-4.
18. Apply the finish to the repair area. Refer to AMM 51-21.
19. Apply corrosion inhibiting compound on the internal surfaces.

NOTES

- THESE REPAIRS (DETAIL I AND II) ARE CATEGORY B. THE CATEGORY B REPAIR HAS FAA APPROVAL IF YOU DO THE SUPPLEMENTAL INSPECTIONS GIVEN IN TABLE II. INCORPORATION OF THESE INSPECTION REQUIREMENTS INTO THE AIRPLANE'S MAINTENANCE PROGRAM SATIFIES THE DAMAGE TOLERANCE ASSESSMENT OF THE REPAIR SPECIFIED BY THE REPAIR ASSESSMENT PROGRAM. THIS ASSESSMENT CAN BE DONE AFTER YOU RELEASE THE AIRPLANE TO SERVICE. REFER TO SRM 51-00-06 FOR GENERAL DATA ABOUT THE REPAIR ASSESSMENT PROGRAM. SEE DETAIL III FOR THE INSPECTION AREA.

Skin and Bonded Doubler Repair - Aft Galley and Aft Entry Door Upper Hinge Cutout
Figure 21A (Sheet 1)

BOEING PROPRIETARY - Copyright © - Unpublished Work - See title page for details.

NOTES (CONTINUED)

- THESE REPAIRS (DETAIL I AND II) WILL HAVE AN EFFECT ON THE STRUCTURAL SIGNIFICANT ITEM (SSI):
  - NUMBER F-16A, B AND C WHEN INSTALLED AT THE AFT GALLEY DOOR CUTOUT, BUT THE SUPPLEMENTAL INSPECTIONS GIVEN IN TABLE II WILL MEET THE SSID INSPECTION REQUIREMENTS FOR F-16A IN THE REPAIR AREA. HOWEVER, THE INTERNAL INSPECTION ALTERNATIVES FOR F-16B AND C ARE STILL APPLICABLE. ALSO, A NEW INSPECTION METHOD IS NECESSARY FOR THE EXTERNAL INSPECTIONS OF F-16C. SEE TABLE III FOR NEW REQUIREMENTS FOR F-16C.
  - NUMBER F-17A, B AND C WHEN INSTALLED AT THE AFT ENTRY DOOR CUTOUT WITHOUT AIRSTAIRS, BUT THE SUPPLEMENTAL INSPECTIONS GIVEN IN TABLE II WILL MEET THE SSID INSPECTION REQUIREMENTS FOR F-17A IN THE REPAIR AREA. HOWEVER, THE INTERNAL INSPECTION ALTERNATIVES FOR F-17B AND C ARE STILL APPLICABLE. ALSO, A NEW INSPECTION METHOD IS NECESSARY FOR THE EXTERNAL INSPECTIONS OF F-17C. SEE TABLE III FOR NEW REQUIREMENTS FOR F-17C IN THE REPAIR AREA.

  DO THE INTERNAL INSPECTIONS FOR F-16B AND C AND F-17B AND C, IF NECESSARY, AT THE SUBSEQUENT SUPPLEMENTAL STRUCTURAL INSPECTION DOCUMENT (SSID) INSPECTION ON THIS AIRPLANE. REFER TO SRM 51-00-4, FIG. 3, FOR THE APPLICABLE DATA.
- WHEN YOU USE THIS REPAIR, REFER TO:
  - AMM 51-21 FOR INTERIOR AND EXTERIOR FINISHES
  - NDT PART 6, 51-00-00 FOR SURFACE HFEC INSPECTION OF ALUMINUM PARTS
  - SOPM 20-44-04 FOR APPLICATION OF URETHANE COMPATIBLE FINISHES
  - SRM 51-00-6 FOR REPAIR CATEGORIES, DEFINITIONS AND REPAIR ASSESSMENT PROGRAM INFORMATION
  - SRM 51-10-1 FOR INSPECTION AND REMOVAL OF DAMAGE
  - SRM 51-10-2 FOR PROTECTIVE TREATMENT OF METALS
  - SRM 51-20-4 FOR REPAIR SEALING
  - SRM 51-30 FOR FASTENER CODE, REMOVAL AND INSTALLATION, HOLE SIZES, EDGE MARGINS AND SUBSTITUTION
  - SRM 51-40-5 FOR REPAIR OF BONDED METAL STRUCTURE
  - SRM 51-70 FOR AERODYNAMIC SMOOTHNESS
- ALL MACHINED SURFACES MUST HAVE A FINISH OF 125 MICROINCHES Ra UNLESS OTHERWISE SPECIFIED.

[A] THE THICKNESS OF THE FILLER MUST BE EQUAL TO THE TOTAL THICKNESS OF THE SKIN, OR THE SKIN AND THE DOUBLER.

[B] MACHINE THE EDGE OF THE TRIM-OUT 63 MICROINCHES Ra OR BETTER.

[C] IF THE AIRPLANE HAS LESS THAN 66,000 FLIGHT CYCLES, THE INSPECTION THRESHOLD IS THE EARLIER OF:

- THE INITIAL SCHEDULED INSPECTION AS GIVEN IN THE OPERATOR'S REPAIR ASSESSMENT PROGRAM (RAP)
- 66,000 FLIGHT CYCLES.

IF THE AIRPLANE HAS MORE THAN 66,000 FLIGHT CYCLES AND THE INITIAL SCHEDULED SUPPLEMENTAL STRUCTURAL INSPECTION DOCUMENT (SSID) INSPECTION HAS BEEN PERFORMED, THE INSPECTION THRESHOLD IS:

- THE NEXT SCHEDULED SSID INSPECTION FOR THE STRUCTURALLY SIGNIFICANT ITEMS F-16A AND F-17A IN THE REPAIRED AREA.

[D] IF THE AIRPLANE HAS MORE THAN 66,000 FLIGHT CYCLES, DO THE NEW INSPECTION ALTERNATIVE AT THE SUBSEQUENT SCHEDULED SSID INSPECTION FOR F-16 AND F-17 ON THIS AIRPLANE.

FASTENER SYMBOLS

REFERENCE FASTENER LOCATION.

INITIAL FASTENER LOCATION
INSTALL A BACB30KF6A HEX DRIVE BOLT WITH A BACC30R COLLAR.

INITIAL FASTENER LOCATION
INSTALL BACB30FQ6A HEX DRIVE BOLT WITH A BACC30M COLLAR.

REPAIR FASTENER LOCATION
INSTALL BACB30FN6A HEX DRIVE BOLT WITH A BACC30M COLLAR.

REPAIR MATERIAL			
PART		QTY	MATERIAL
1	PLATE	1	0.063 INCH THICK CRES 301 1/2 HARD MIL-S-5059
2	FILLER	1	CLAD 2024-T3 [A]

TABLE I

Skin and Doubler Repair - Aft Galley and Aft Entry Door Upper Hinge Cutout
Figure 21A (Sheet 2)

BOEING PROPRIETARY - Copyright © - Unpublished Work - See title page for details.

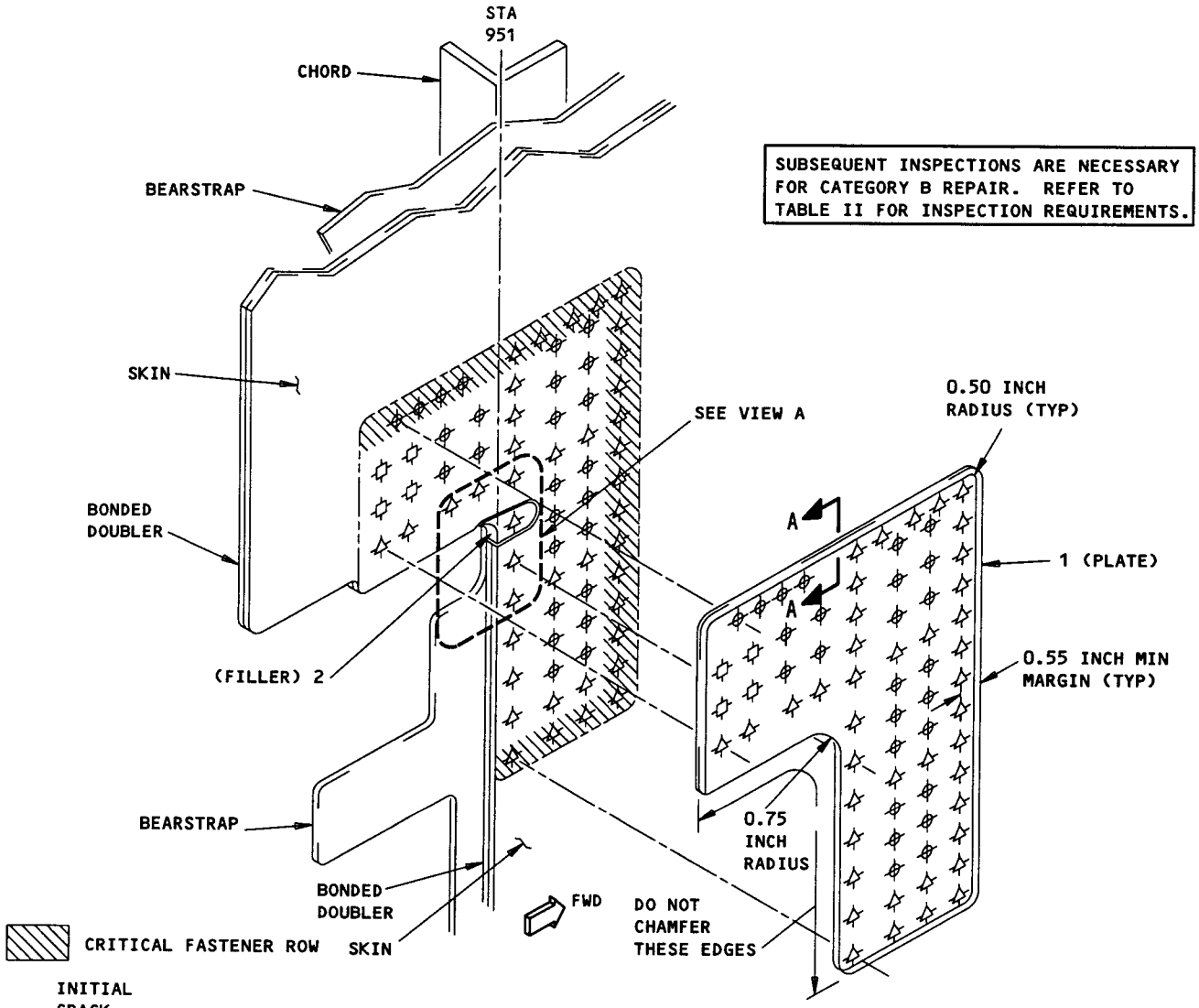

AFT GALLEY DOOR UPPER HINGE REPAIR SHOWN
AFT ENTRY DOOR UPPER HINGE REPAIR OPPOSITE

DETAIL I

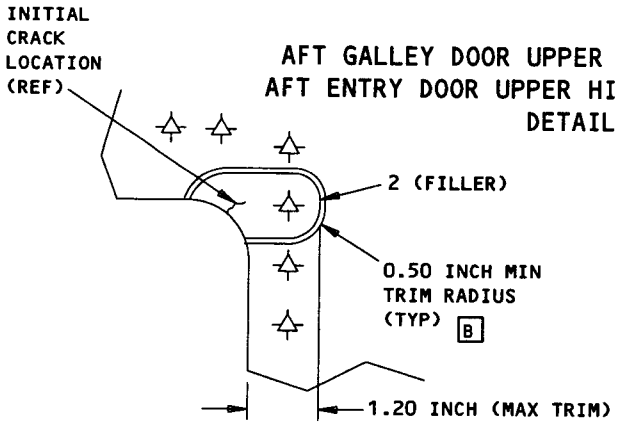

SKIN AND BONDED DOUBLER CRACK TRIMOUT
VIEW A

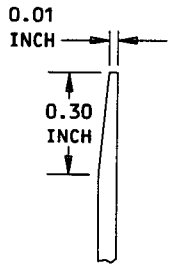

TYPICAL EDGE CHAMFER
SECTION A-A

Skin and Doubler Repair - Aft Galley and Aft Entry Door Upper Hinge Cutout
Figure 21A (Sheet 3)

BOEING PROPRIETARY - Copyright © - Unpublished Work - See title page for details.

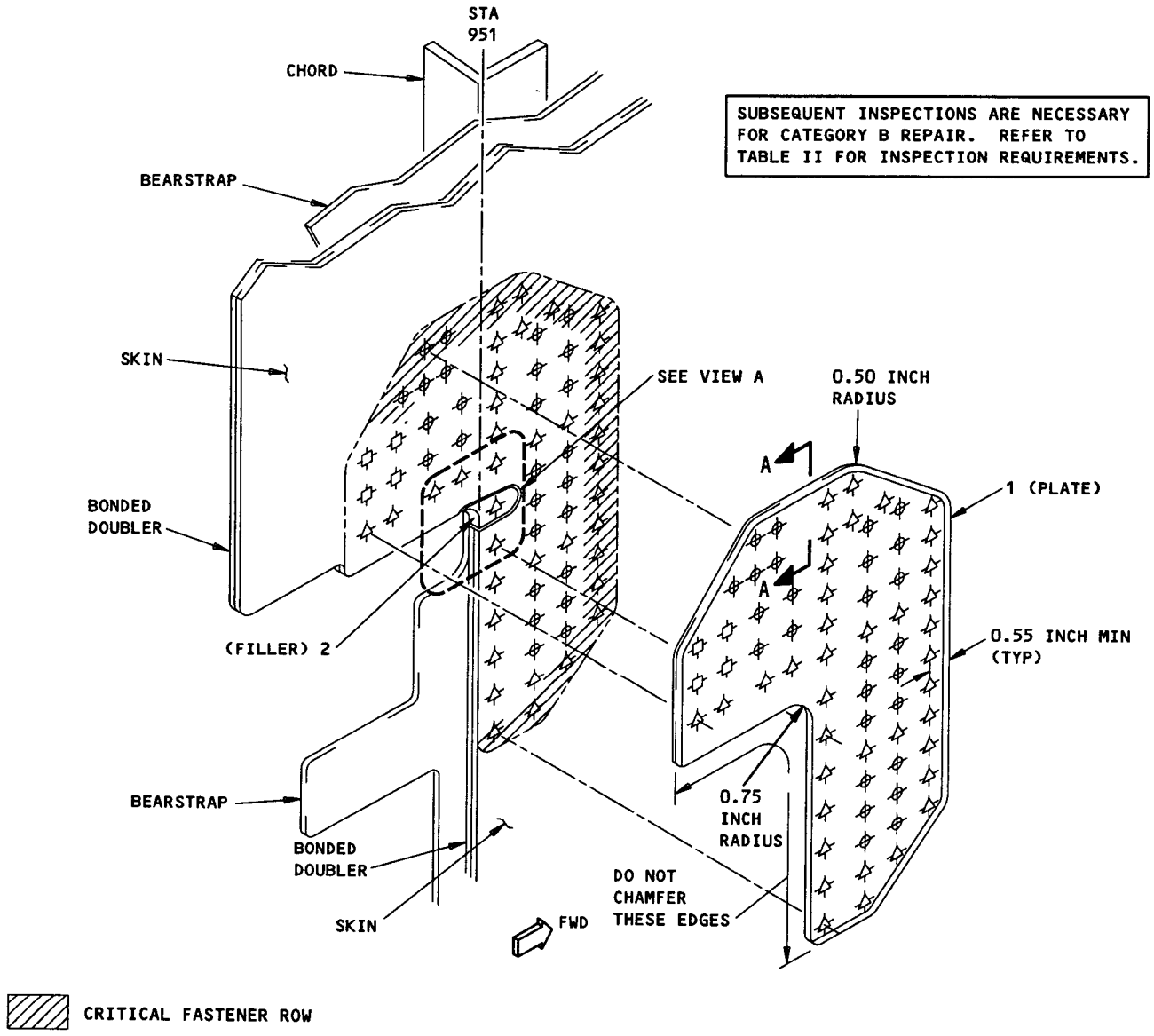

SUBSEQUENT INSPECTIONS ARE NECESSARY FOR CATEGORY B REPAIR. REFER TO TABLE II FOR INSPECTION REQUIREMENTS.

AFT GALLEY DOOR UPPER HINGE REPAIR SHOWN
AFT ENTRY DOOR UPPER HINGE REPAIR OPPOSITE
(ALTERNATE METHOD)
DETAIL II

Skin and Doubler Repair - Aft Galley and Aft Entry Door Upper Hinge Cutout
Figure 21A (Sheet 4)

BOEING PROPRIETARY - Copyright © - Unpublished Work - See title page for details.

CATEGORY B REPAIR AND SSI F-16A AND F-17A INSPECTION REQUIREMENTS			
INSPECTION THRESHOLD	REPEAT INSPECTION ALTERNATIVES		
	METHOD	INTERVAL	REFERENCES
C	DETAILED VISUAL	4,000 FLIGHT CYCLES	
	MEDIUM FREQUENCY EDDY CURRENT (MFEC)	15,000 FLIGHT CYCLES	737 NDT, PART 6, 53-30-00, FIG. 6
	DETAILED VISUAL		

NOTE:
1) AT EVERY 4.000 FLIGHT CYCLES:
- DO A DETAILED VISUAL INSPECTION OF THE SKIN EXTERNALLY AROUND THE PART 1 PLATE AS SHOWN IN DETAIL III.

2) AT EVERY 15.000 FLIGHT CYCLES:
- DO AN MFEC INSPECTION OF THE BEARSTRAP INTERNALLY AT THE UPPER ROW AND INTERNALLY (OR EXTERNALLY) AT THE LOWER ROW OF THE PART 1 PLATE AS SHOWN IN DETAIL III.
- DO A DETAILED VISUAL INSPECTION OF THE FRAME WEB INTERNALLY AS SHOWN IN DETAIL III.

TABLE II

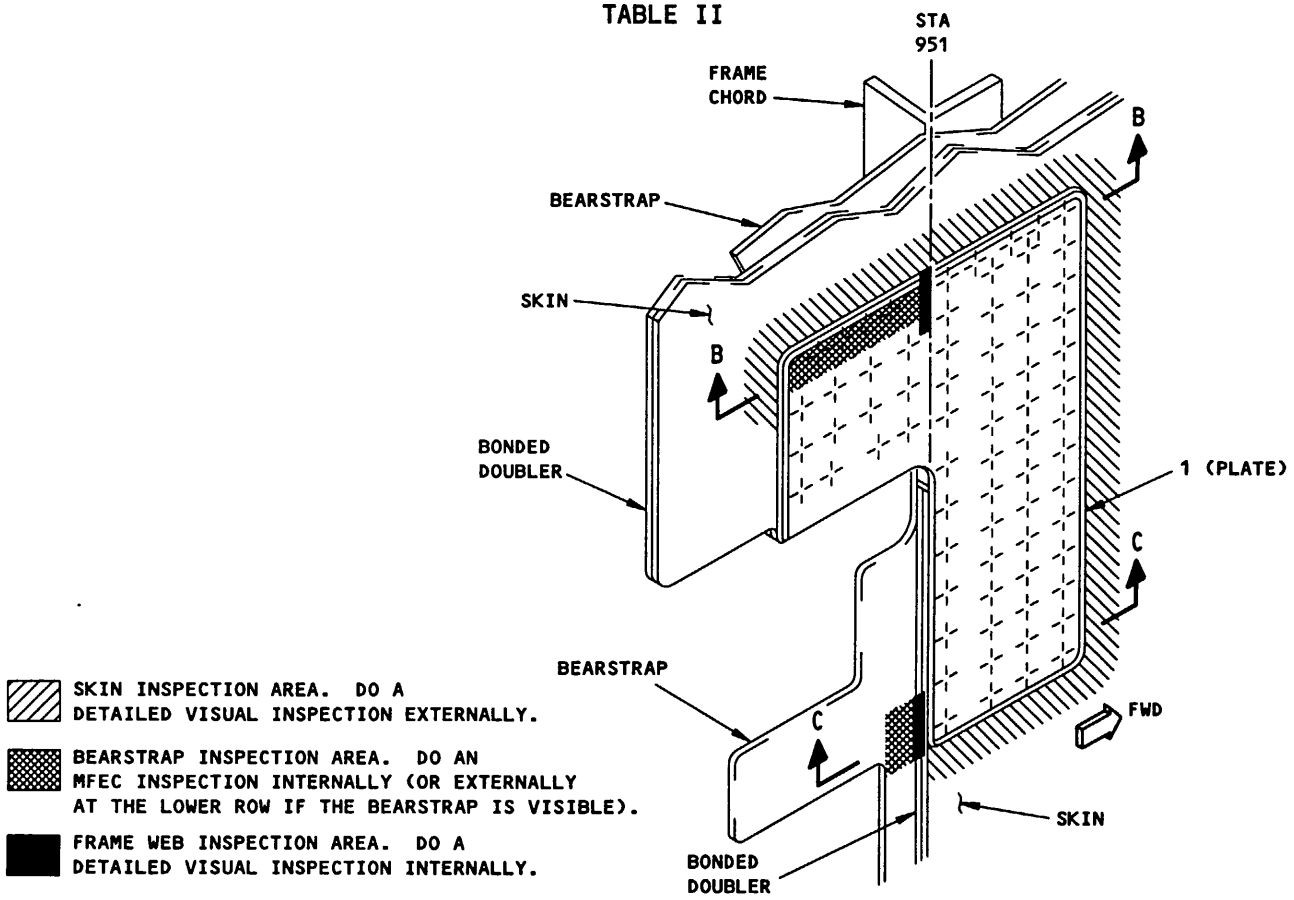

INSPECTION AREA FOR DETAIL I IS SHOWN,
INSPECTION AREA FOR DETAIL II IS ALMOST THE SAME
DETAIL III

Skin and Bonded Doubler Repair - Aft Galley and Aft Entry Door Upper Hinge Cutout
Figure 21A (Sheet 5)

BOEING PROPRIETARY - Copyright © - Unpublished Work - See title page for details.

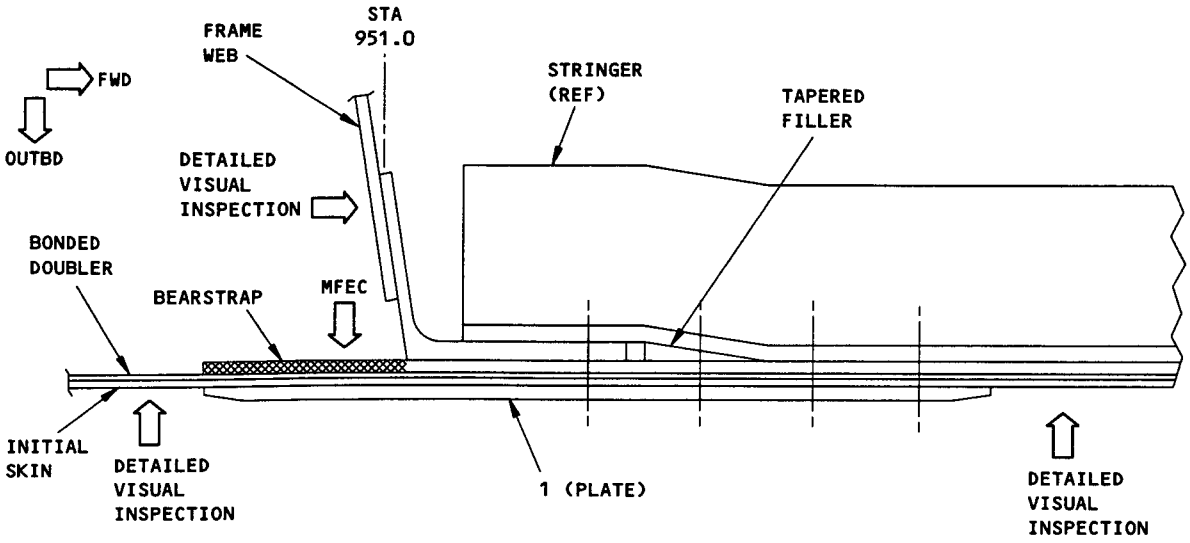

SECTION B-B

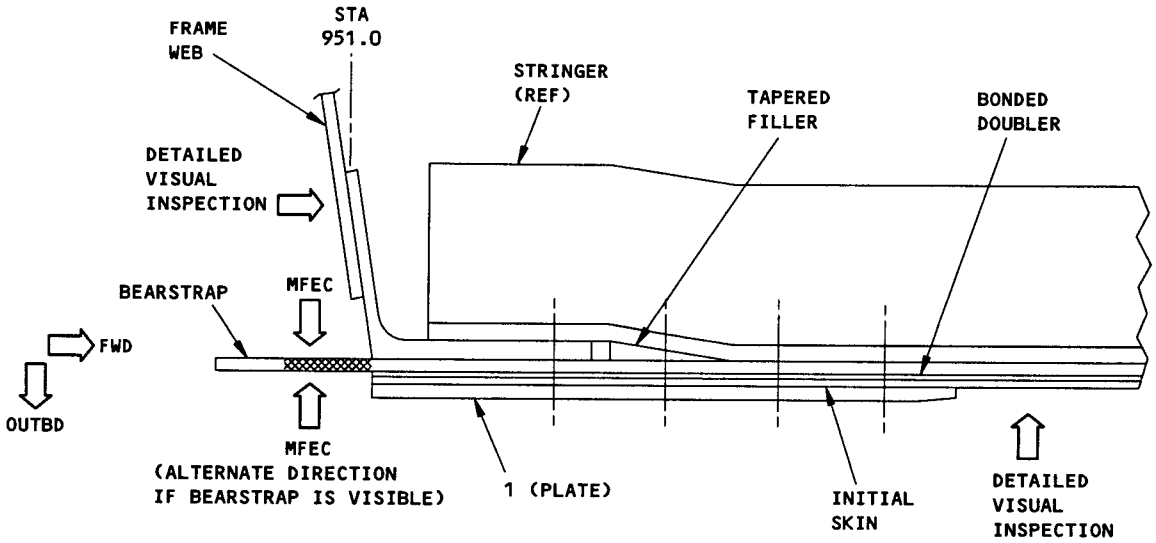

SECTION C-C

Skin and Bonded Doubler Repair - Aft Galley and Aft Entry Door Upper Hinge Cutout
Figure 21A (Sheet 6)

BOEING PROPRIETARY - Copyright © - Unpublished Work - See title page for details.

SSID NUMBER F-16C AND F-17C INSPECTION REQUIREMENTS			
INSPECTION THRESHOLD	REPEAT INSPECTION		
	METHOD	INTERVAL	REFERENCE
66,000 FLIGHT CYCLES AFTER AIRPLANE DELIVERY D	HIGH FREQUENCY EDDY CURRENT (HFEC)	24,000 FLIGHT CYCLES	737 NDT, D6-37239, PART 6, 51-00-00, FIG. 4 OR 23

NOTE: INSPECT THE FRAME CHORD WITH HFEC METHOD INTERNALLY IN THE REPAIR AREA AS SHOWN IN DETAIL IV. IN ADDITION, INSPECT THE SKIN, BEARSTRAP, FRAMES AND SILLS PER THE EXISTING INTERNAL INSPECTIONS GIVEN IN THE 737 SSID DOCUMENT FOR F-16C AND F-17C.

TABLE III

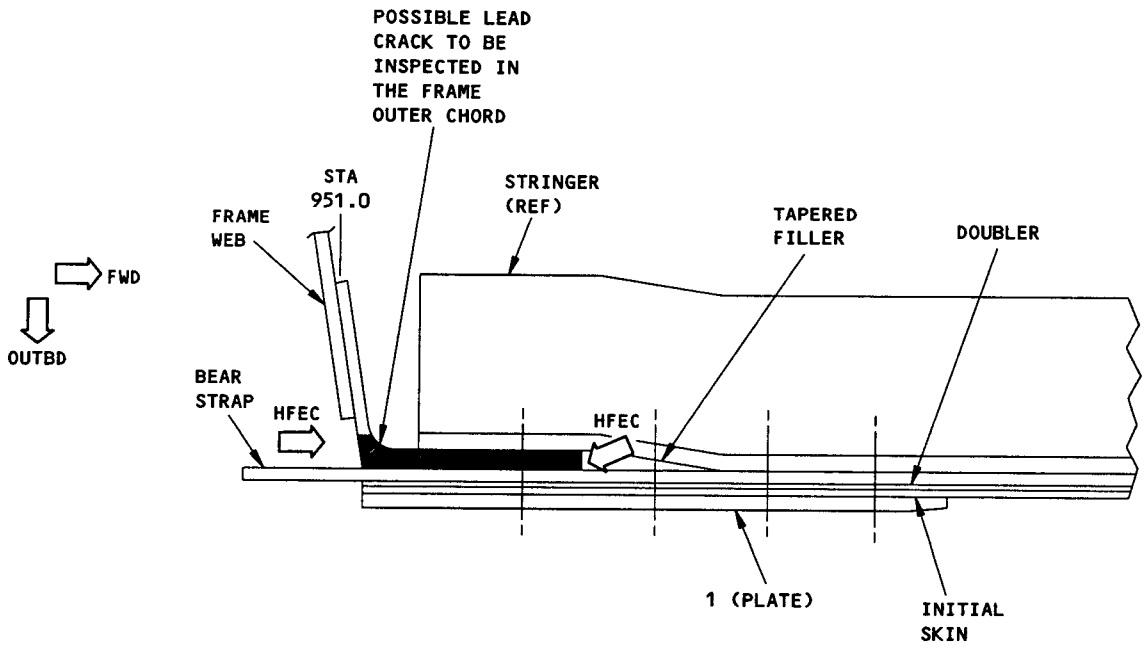

TYPICAL INSPECTION AREA FOR F-16C SHOWN,
FOR F-17C ALMOST THE SAME

DETAIL IV

Skin and Bonded Doubler Repair - Aft Galley and Aft Entry Door Upper Hinge Cutout
Figure 21A (Sheet 7)

BOEING PROPRIETARY - Copyright © - Unpublished Work - See title page for details.

FIGURE 22 DELETED. SEE SB 53-1058 FOR PREFERRED REPAIR.

BOEING PROPRIETARY - Copyright © - Unpublished Work - See title page for details.

APPLICABILITY

THIS REPAIR IS APPLICABLE TO DAMAGE THAT IS LOCATED IN AN AREA OF CONSTANT THICKNESS. DAMAGE MUST BE AT LEAST 1.5 TIMES THE DAMAGE DIAMETER FROM A CHEM-MILLED RADIUS OR EDGE OF A BONDED DOUBLER.

REPAIR INSTRUCTIONS

NOTE: Lightning strikes cause damage that looks like small burn marks. See Detail II.

NOTE: Refer to section I for skin damage away from a fastener location. Refer to Section II for damage at a fastener Location.

SECTION I: REPAIR OF SKIN DAMAGE AWAY FROM A FASTENER LOCATION

1. Examine the area for damage caused by heat. If the visual heat damage (discoloration) is more than 0.5 inch in diameter, do the inspection given in NDT Part 6, 51-00-00 Figure 3. If the skin material is degraded, do a skin repair as given in SRM 53-30-3.

   A. If the damage is less than the limits shown in SRM 53-30-1, Figure 1, do Section I repair instruction 2 or repair instruction 3.

   B. If the damage is:

      - More than the limits shown in SRM 53-30-1, Figure 1 and,
      - Less than 0.3125 inch long, do Section I repair instruction 3.

   C. If the damage is:

      - More than the limits shown in SRM 53-30-1, Figure 1 and,
      - More than 0.3125 inch long, do a doubler repair. See Table I.

2. Repair minor lightning strike damage that is less than the limits given in SRM 53-30-1, figure 1 as follows;

   A. Blend out apparent damage up to 10% of original skin thickness. Removal of damage must not exceed the limits shown in SRM 53-30-1, Figure 1.

   B. Do an inspection to make sure all damage has been removed. Eddy current inspection is preferred. For external skin damage only, an acceptable alternative is to dye penetrant inspect as given in SOPM 20-20-02. A detailed visual inspection with a minimum 10x magnification for cracks on the external skin is a satisfactory alternative. If you do this detailed visual inspection, do subsequent visual inspections at 500 flight cycle intervals until you can do a surface eddy current inspection as given in NDT Part 6, 51-00-00.

   C. Apply a chemical conversion coating as given in SRM 51-10-2.

   D. Apply the finish as given in AMM 51-21.

3. Drill out damage that is less than 0.3125 inch long as follows: D

   A. Use a drill bit that has a diameter of the same or larger than the length of the damage.

   B. Do one of the procedures that follow:

      1. For a permanent repair with no subsequent inspections, do a High Frequency Eddy Current (HFEC) inspection of the open fastener hole as given in NDT Part 6, 51-00-00, Figure 16 for cracks. If no cracks are found, drill the hole 1/16 inch oversize to the next size fastener diameter and install a solid rivet as given in SRM 51-30-5 and the instructions that follow.

      2. For an interim repair with subsequent inspections, do a detailed close visual inspection with a minimum 10X magnification for cracks. If no cracks are found, install a solid rivet as given in SRM 51-30-5 and do the instructions that follow. Do a visual inspection around the fastener at 500 flight cycle intervals until a permanent repair is done as follows:

         a. Remove the fastener and do a High Frequency Eddy Current (HFEC) inspection of the open hole as given in NDT Part 6, 51-00-00, Figure 16.

         b. If no cracks are found, drill the hole 1/16 inch oversize and install a solid rivet as given in the instructions that follow. The maximum hole size permitted is 0.375 inch.

Repair of Lightning Strike Damage on Pressurized Fuselage Skin
Figure 23 (Sheet 1)

BOEING PROPRIETARY - Copyright © - Unpublished Work - See title page for details.

REPAIR INSTUCTIONS (CONTINUED)

3. For a time limited repair, do a detailed close visual inspection with a minimum 10X magnification for cracks. If no cracks are found, install a blind rivet as given in the instructions that follow. Do visual inspections of the blind rivets at 500 flight cycle intervals. To replace the time-limited repair with a permanent repair do what follows:

   a. Replace blind rivets that are loose or missing with solid rivets as given below.

   b. Remove the blind rivet after no more than 12,000 flight cycles. Do a High Frequency Eddy Current (HFEC) inspection of the open hole as given in NDT Part 6, 51-00-00, Figure 16.

   c. If no cracks are found, drill the hole 1/16 inch oversize and install a solid rivet as given in SRM 51-30-5 and the instructions that follow. The maximum hole size permitted is 0.375 inch.

C. If the diameter of the hole is larger than 0.375 inch, do a doubler repair as given in Table I.

D. Remove the nicks, scratches, gouges, burrs, and sharp edges from the skin.

E. Apply a chemical conversion coating to the bare surfaces of the skin. Refer to SRM 51-10-2.

CAUTION: BE CAREFUL WHEN YOU INSTALL LARGE DIAMETER RIVETS IN THIN SKINS. RIVET TOOLS CAN DENT, SCRATCH, NICK, GOUGE, OR BUCKLE THE FUSELAGE SKIN.

F. Plug hole up to 0.375 inch in diameter with a solid 2117-T3 protruding head rivet or a solid 2117-T3 countersink head rivet. [B] The depth of the countersink must not be more than 2/3 of the skin thickness. Countersunk head may be shaved flush with skin after driving tight.

CAUTION: THE USE OF A BLIND FASTENER IS AN INTERIM REPAIR AND MUST BE INSPECTED AT EVERY 500 FLIGHT INTERVAL CHECK FOR LOOSE FASTENERS [A]. REPLACE BLIND RIVET WITH SOLID RIVET IF ANY LOOSENESS OR OTHER DETERIORATION IS EVIDENT. [B] [C]

G. If the inside area is inaccessible for driving solid rivets, blind rivets, NAS1738E, NAS1739E, NAS1398D, NAS1399D, BACR15FR OR BACR15FP may be used. Blind rivets must not be shaved and the countersink must not exceed 2/3 of skin thickness. Refer to SRM 51-30-5 for fastener hole sizes.

H. Apply the finish as given in AMM 51-21.

SECTION II: REPAIR OF LIGHTNING STRIKE DAMAGE AT A FASTENER LOCATION

- This section is applicable if the damaged fastener is a BACR15CE5 or BACR15CE6 rivet.
- Damage at a fastener location is divided into two categories. The first category is when the lightning strike damage is to the fastener and there is pitting damage to the skin at the hole. The second category is when the damage is to the fastener only and there is no pitting damage at the hole.

1. Examine the area for damage caused by heat. If the visual heat damage (discoloration) is more than 0.5 inch in diameter, do the inspection given in NDT Part 6, 51-00-00 Figure 3. If the skin material is degraded, do a skin repair as given in SRM 53-30-3.

2. Remove the fastener as given in SRM 51-30-02.

3. Do a detailed visual inspection with a minimum 10X magnification to find hole damage.

4. If you find pitting damage, for a time-limited repair do as follows, provided the conditions that follow are met:

   - There are no existing repairs with in 10 inches of the damage,
   - There will be no more than 3 blind rivet repairs within a 20 inch span,
   - There are no adjacent blind fasteners

   For a permanent repair, do steps A, E, F, and G only.

   A. Determine hole size required to clean up pitting damage. If the hole size required is greater than 0.25 inch diameter, do a skin repair as given in SRM 53-30-3. If hole size is less than or equal to 0.25 inch in diameter go to step B. For a permanent repair go to step E.

Repair of Lightning Strike Damage on Pressurized Fuselage Skin
Figure 23 (Sheet 2)

BOEING PROPRIETARY - Copyright © - Unpublished Work - See title page for details.

REPAIR INSTRUCTIONS (CONTINUED)

B. Drill the required hole to remove the pitting damage and install a BACR15FR or a BACB30VW blind fastener. Refer to SRM 51-30-5. If hole is oversized less than 1/16 inch, then use a countersink repair washer as given in SRM 51-30-8. The replacement fastener spacing must be a minimum of 4D.

C. Do a detailed visual inspection with a minimum of 10X magnification every 500 flight cycles up to a maximum of 6,000 flight cycles. For a permanent repair, replace blind fasteners with solid rivets within 6,000 flight cycles as given below.

D. Remove the blind fastener. Refer to SRM 51-30-02.

E. Do a High Frequency Eddy Current (HFEC) inspection of the hole. Refer to NDT Part 6, 51-00-00 Figure 16.

F. If damage is found and the hole is 0.25 inch in diameter or more, repair using a skin repair as given in Table I. If the hole is less than 0.25 inch in diameter, drill the hole to the next size up to 0.25 inch in diameter, and do the HFEC inspection again. If all the damage is not removed, do a skin repair as given in SRM 53-30-3.

G. Once the hole is free from HFEC indications, drill the hole a minimum of 1/16 inch oversize and up to a maximum 5/16 inch diameter. Refer to SRM 51-30-5. Install a BACR15BB()AD or BACR15ET()AD protruding head rivet. The edge margin for the replacement fastener must be a minimum of 1.7D or as given in SRM 51-30-6, whichever is greater. The replacement fastener spacing must be a minimum of 4D.

5. If there is no pitting damage, for a time-limited repair do as follows, provided the conditions that follow are met:

- There are no existing repairs within 10 inches of the damage,
- There will be no more than 3 blind rivet repairs within a 20 inch span,
- There are no adjacent blind fasteners. For a permanent repair, do steps D, E, and F only.

A. Drill the required hole and install a BACR15FR or BACB30VW blind fastener. Refer to SRM 51-30-5. The replacement fastener spacing must be a minimum of 4D.

B. Do a detailed visual inspection with a minimum of 10X magnification every 500 flight cycles up to a maximum of 2,500 flight cycles. For a permanent repair, replace blind fasteners with solid rivets within 2,500 flight cycles as given below.

C. Remove the blind fastener. Refer to SRM 51-30-2.

D. Do a High Frequency Eddy Current (HFEC) inspection of the hole. Refer to NDT Part 6, 51-00-00 Figure 16.

E. If damage is found and the hole is 0.25 inch in diameter or more, repair using a skin repair as given in Table I. If the hole is less than 0.25 inch in diameter, drill the hole to the next size, up to 0.25 inch in diameter, and do the HFEC inspection again. If all the damage is not removed, do a skin repair as given in Table I.

F. Once the hole is free from HFEC indications, drill the hole a minimum of 1/16 inch oversize and up to a maximum 5/16 inch diameter. Refer to SRM 51-30-5. Install a BACR15BB()AD or BACR15ET()AD protruding head rivet. The edge margin for the replacement fastener must be a minimum of 1.7D or as given in SRM 51-30-6, whichever is greater. The replacement fastener spacing must be a minimum of 4D.

Repair of Lightning Strike Damage on Pressurized Fuselage Skin
Figure 23 (Sheet 3)

BOEING PROPRIETARY - Copyright © - Unpublished Work - See title page for details.

NOTES

- D = FASTENER DIAMETER
- DAMAGE, SUCH AS BLENDOUTS, TRIMOUTS, OR DENTS:

- THAT OCCUR TO A STRUCTURALLY SIGNIFICANT ITEM (SSI) GIVEN IN SRM 51-00-4, FIGURE 3 AND,
- THAT ARE WITHIN THE ALLOWABLE DAMAGE LIMITS OF THE BOEING SRM,

DO NOT HAVE AN EFFECT ON THE DAMAGE TOLERANCE PROPERTIES OF THE SSI. THEREFORE, EXISTING SUPPLEMENTAL STRUCTURAL INSPECTION DOCUMENT (SSID) INSPECTION PROGRAMS REMAIN EFFECTIVE.

THE PERMANENT REPAIR AS GIVEN IN SECTION I PARAGRAPH 3.B.1 IS CATEGORY A REPAIR. THE INSPECTIONS GIVEN IN THE BASELINE ZONAL INSPECTION (BZI) ARE SUFFICIENT TO MAINTAIN THE DAMAGE TOLERANCE OF THE INITIAL STRUCTURE WITH THIS REPAIR INSTALLED. REFER TO SRM 51-00-06 FOR REPAIR CATEGORIES, BZI DEFINITION AND REPAIR ASSESSMENT PROGRAM DATA.

THE INTERIM REPAIR AS GIVEN IN SECTION I PARAGRAPH 3.B.2 IS CATEGORY B REPAIR. CATEGORY B REPAIR HAS FAA APPROVAL IF YOU DO THE SUPPLEMENTAL INSPECTION AS GIVEN IN SECTION I PARAGRAPH 3.B.2. INCORPORATION OF THESE INSPECTION REQUIREMENTS INTO AIRPLANES MAINTENANCE PROGRAM SATISFIES THE DAMAGE TOLERANCE ASSESSMENT OF THE REPAIR SPECIFIED IN THE REPAIR ASSESSMENT PROGRAM (RAP). THIS ASSESSMENT CAN BE DONE AFTER YOU RELEASE THE AIRPLANE TO SERVICE. REFER TO SRM 51-00-06 FOR REPAIR CATEGORIES, BZI DEFINITION AND REPAIR ASSESSMENT PROGRAM DATA.

THE TIME LIMITED REPAIR AS GIVEN IN SECTION I PARAGRAPH 3.B.3 IS CATEGORY C REPAIR. CATEGORY C REPAIR HAS FAA APPROVAL IF YOU DO THE SUPPLEMENTAL INSPECTION GIVEN IN SECTION I PARAGRAPH 3.B.3. INCORPORATION OF THESE INSPECTION REQUIREMENTS INTO AIRPLANES MAINTENANCE PROGRAM SATISFIES THE DAMAGE TOLERANCE ASSESSMENT OF THE REPAIR SPECIFIED IN THE REPAIR ASSESSMENT PROGRAM (RAP). THIS ASSESSMENT CAN BE DONE AFTER YOU RELEASE THE AIRPLANE TO SERVICE. REFER TO SRM 51-00-06 FOR REPAIR CATEGORIES, BZI DEFINITION AND REPAIR ASSESSMENT PROGRAM DATA.

- LIGHTNING STRIKES ARE INDICATED ON THE BODY SKIN BY A SERIES OF SMALL BURN MARKS.
- INSTALL FASTENERS WET WITH BMS 5-95 SEALANT.
- USE CARE WHEN YOU BUCK THE LARGER DIAMETER RIVETS IN THE THIN SKINS TO PREVENT PERMANENT DISTORTION TO THE SKINS.
- FOR EDDY CURRENT INSPECTION, REFER TO NDT, PART 6.
- REFER TO SOPM 20-20-02 FOR DYE PENETRANT INSPECTION.
- REFER TO SRM 51-10-4 FOR FIRE DAMAGE EVALUATION.
- REFER TO SRM 51-20-4 FOR SEALANTS AND SEALING.
- REFER TO SRM 51-30-5 FOR FASTENER HOLE SIZES.
- REFER TO SRM 51-30-8 FOR COUNTERSINK REPAIR WASHER.
- REFER TO SRM 53-30-1 FOR BODY SKIN ALLOWABLE DAMAGE.

A THIS REPAIR HAS FAA APPROVAL ONLY IF THE INSPECTIONS GIVEN IN THIS FIGURE ARE DONE AT THE SPECIFIED INTERVALS.

B PROTRUDING HEAD FASTENERS ARE NOT PERMITTED IN THE SHADED AREAS SHOWN IN SRM 51-70, FIGURE 5 AND 8.

C A REPAIR USING BLIND FASTENERS IS A TIME-LIMITED REPAIR. THE TIME-LIMITED REPAIR HAS FAA APPROVAL IF YOU OBEY THE CONDITIONS THAT FOLLOW:

- LOOSE OR MISSING FASTENERS MUST BE REPLACED WITH SOLID RIVETS
- BLIND RIVETS ARE REPLACED WITH SOLID RIVETS AFTER NO MORE THAN 12,000 FLIGHT CYCLES FROM THE TIME THE BLIND RIVETS WERE INSTALLED.

D REFER TO SRM 53-30-3 FIGURE 46 OR FIGURE 48 IF A REPAIR HOLE IS LESS THAN A DISTANCE OF 4 HOLE DIAMETERS FROM:

- ANOTHER HOLE
- A FASTENER
- A MATERIAL EDGE.

Repair of Lightning Strike Damage on Pressurized Fuselage Skin
Figure 23 (Sheet 4)

W36941

BOEING PROPRIETARY - Copyright © - Unpublished Work - See title page for details.

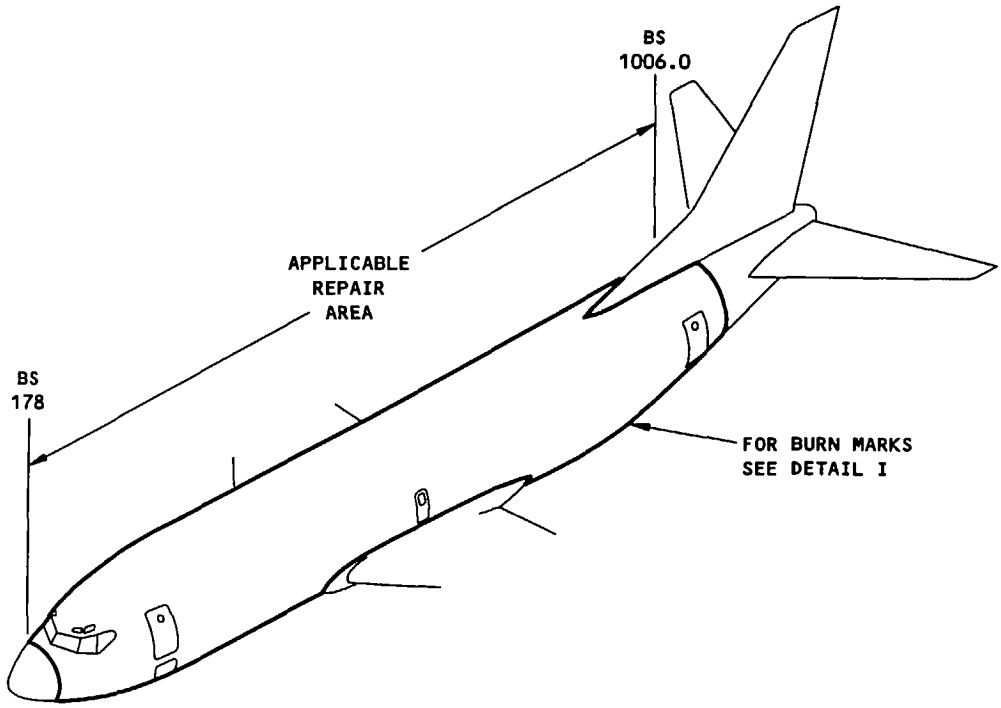

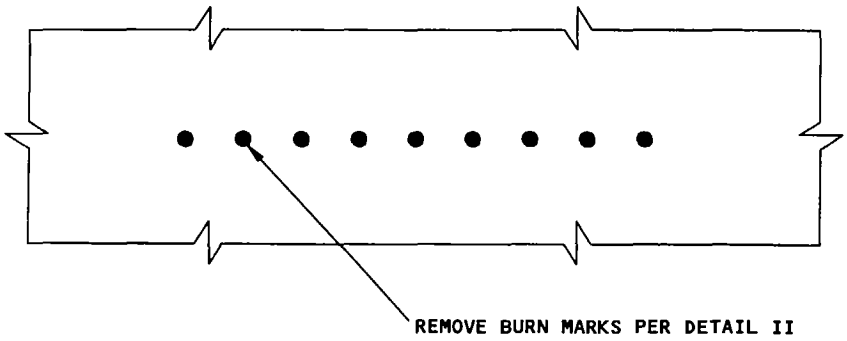

DETAIL I

Repair of Lightning Strike Damage on Pressurized Fuselage Skin
Figure 23 (Sheet 5)

BOEING PROPRIETARY - Copyright © - Unpublished Work - See title page for details.

HOLE IN SKIN	REPAIR
UP TO 0.375 DIA	REPAIR AS GIVEN IN SECTION 1 PARGRAPH 3 OF REPAIR INSTRUCTIONS
BETWEEN 0.375 AND 1.00 DIA	REPAIR AS GIVEN IN SMALL HOLE REPAIR, 53-30-3, FIGURE 5 OR 53-30-3, FIGURE 18
OVER 1.00 DIA	REPAIR AS GIVEN IN 53-30-3 FIGURE 46 OR FIGURE 48

REPAIR INDEX
TABLE I

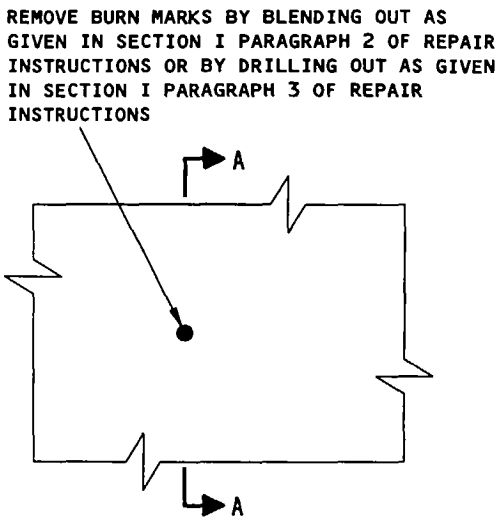

DETAIL II

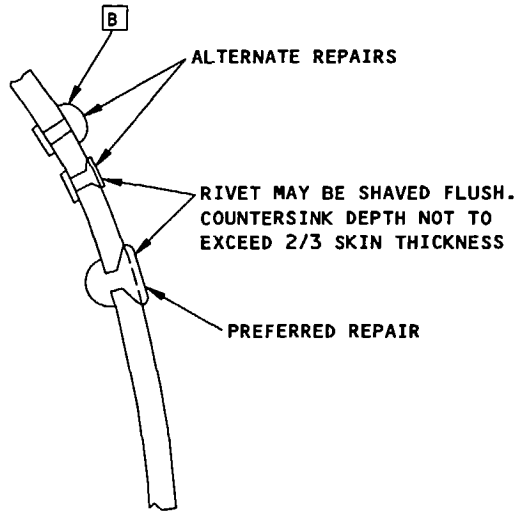

SECTION THRU DRILLED OUT REPAIR
SECTION A-A

Repair of Lightning Strike Damage on Pressurized Fuselage Skin
Figure 23 (Sheet 6)

BOEING PROPRIETARY - Copyright © - Unpublished Work - See title page for details.

APPLICABILITY

THIS REPAIR APPLIES TO CRACKS IN THE SKIN, DOUBLER OR BEARSTRAP AT THE LOWER CORNERS OF THE AFT GALLEY AND ENTRY DOOR CUTOUTS WITHIN THE AREA SHOWN IN DETAIL I.

CONTACT BOEING BEFORE YOU DO A REPAIR:

- IF A CRACK EXTENDS PAST THE AREA SHOWN IN DETAIL I.
- IF THERE IS DELAMINATION BETWEEN THE SKIN AND THE DOUBLER.

REPAIR INSTRUCTIONS

1. Remove the threshold (scuff plate), equipment, and the fasteners as necessary to gain access to the repair area.
2. Put a thin steel plate:
   - Between the bonded doubler and the bearstrap, if only the skin and the doubler are damaged
   - Between the bearstrap and the structure below the bearstrap, if the bearstrap is damaged.
3. If the crack stops 2D or more away from a fastener hole, drill a stop hole at the end of the crack. Refer to SRM 51-10-1. It is optional to cut out the crack as given in Step 4.
4. If the crack stops at a fastener hole, goes through a fastener hole, or stops less than 2D away from a fastener hole, then cut out the crack. See Detail I. Cut out only the structure that is cracked. Cut out the structure only in the area shown in Detail I. Make the corner radii of the cut 0.50 inch minimum. Do a high frequency eddy current (HFEC) test on the edge of the cutout. If there are no cracks, make the cutout larger by 0.04 inch. Refer to SRM 51-10-1. Refer to NDT Part 6, 51-00-00 for the HFEC procedure.
5. Make the repair parts. See Table I. If the cracks are in the skin and doubler or are only in the bearstrap, use parts 2 and 5. If the cracks are in the skin, the doubler and the bearstrap, use parts 1, 2, and 5. Make the contour of the repair parts the same as the contour of the initial skin.
6. Preform the repair parts to match the fuselage skin contour. Refer to SRM 51-20-1 for Sheet Metal Materials.
7. Assemble the repair parts. See Detail I.
8. Drill the threshold/scuff plate attachment fastener holes through the repair parts only. Do not damage the initial parts.
9. Drill the fastener holes.
10. Disassemble the repair parts.
11. Remove the nicks, scratches, gouges, burrs, and sharp edges from the initial skins and the repair parts.
12. Apply a chemical conversion coating to the bare surfaces of the initial skins and to the repair parts. Refer to SRM 51-10-2.
13. Apply one coat of BMS 10-79, Type II or III primer to the repair parts and to the cut edges of the initial skins. Refer to SOPM 20-44-04.
14. Install repair washers in the countersunk holes in the skin panel. Refer to SRM 51-30-8.
15. Install the repair parts with BMS 5-95 sealant between the mating surfaces. Refer to SRM 51-20-4.
16. Install the fasteners. Install the non-aluminum fasteners wet with BMS 5-95 sealant in transition fit holes.
17. Apply BMS 5-95 sealant over the outer surfaces that will go under the scuff plate and to the edges of the repair plates. Fill the space between the parts with BMS 5-95 sealant.
18. Install the threshold as follows:
    - Cut and weld the crest of the threshold as necessary to fit over the repair parts. See Section C-C. Refer to BAC 5977.
    - Sand the edges and outer surfaces, in a constant direction, with a 120 grit abrasive
    - Apply one layer of BMS 10-11, Type I primer to the inner surfaces of the threshold
    - Apply BMS 5-95 aerodynamic smoother all around the threshold at a 6:1 taper ratio.
19. Apply the finish to the repair area. Refer to the applicable Boeing production drawings and AMM 51-21.
20. Apply corrosion inhibiting compound on the internal surfaces. Refer to SRM 51-20-5.

Fuselage Skin Repair - Aft Galley and Aft Entry Door Cutouts Lower Forward Corner
Figure 24 (Sheet 1)

BOEING PROPRIETARY - Copyright © - Unpublished Work - See title page for details.

NOTES

- THIS REPAIR IS CATEGORY B. THE CATEGORY B REPAIR HAS FAA APPROVAL IF YOU DO THE SUPPLEMENTAL INSPECTIONS GIVEN IN TABLE II. INCORPORATION OF THESE INSPECTION REQUIREMENTS INTO THE AIRPLANE'S MAINTENANCE PROGRAM SATISFIES THE DAMAGE TOLERANCE ASSESSMENT OF THE REPAIR SPECIFIED BY THE REPAIR ASSESSMENT PROGRAM. THIS ASSESSMENT CAN BE DONE AFTER YOU RELEASE THE AIRCRAFT TO SERVICE. REFER TO SRM 51-00-6 FOR GENERAL DATA ABOUT THE REPAIR ASSESSMENT PROGRAM. SEE DETAIL II OR III FOR THE INSPECTION AREA.
- THIS REPAIR WILL HAVE AN EFFECT ON THE STRUCTURAL SIGNIFICANT ITEM (SSI):
  - NUMBER F-16A, B AND C WHEN INSTALLED AT THE AFT GALLEY DOOR, BUT THE SUPPLEMENTAL INSPECTIONS GIVEN IN TABLE II WILL MEET THE SSID INSPECTION REQUIREMENTS FOR F-16A IN THE REPAIR AREA. HOWEVER, THE INTERNAL INSPECTION ALTERNATIVES FOR F-16B AND C ARE STILL APPLICABLE. ALSO, A NEW INSPECTION IS NECESSARY FOR THE EXTERNAL INSPECTIONS OF THE F-16C. SEE TABLE III FOR NEW REQUIREMENTS FOR F-16C.
  - NUMBER F-17A, B AND C WHEN INSTALLED AT THE AFT ENTRY DOOR WITHOUT AIRSTAIRS, BUT THE SUPPLEMENTAL INSPECTIONS GIVEN IN TABLE II WILL MEET THE SSID INSPECTION REQUIREMENTS FOR F-17A IN THE REPAIR AREA. HOWEVER, THE INTERNAL INSPECTION ALTERNATIVES FOR F-17B AND C ARE STILL APPLICABLE. ALSO, A NEW INSPECTION METHOD IS NECESSARY FOR THE EXTERNAL INSPECTIONS OF THE F-17C. SEE TABLE III FOR NEW REQUIREMENTS FOR F-17C IN THE REPAIR AREA.
  - NUMBER F-18A AND B WHEN INSTALLED AT THE AFT ENTRY DOOR WITH AIRSTAIRS, BUT THE SUPPLEMENTAL INSPECTIONS GIVEN IN TABLE II WILL MEET THE SSID INSPECTION REQUIREMENTS FOR F-18A IN THE REPAIR AREA. HOVEVER, THE INTERNAL INSPECTION ALTERNATIVES FOR F-18B ARE STILL APPLICABLE.

  DO THE INTERNAL INSPECTIONS FOR F-16B AND C, F-17B AND C, AND F-18B, IF NECESSARY, AT THE SUBSEQUENT SUPPLEMENTAL STRUCTURAL INSPECTION DOCUMENT (SSID) INSPECTION ON THIS AIRPLANE. REFER TO SRM 51-00-4, FIG. 3, FOR THE APPLICABLE SSI DATA.
- D = THE FASTENER DIAMETER
- ALL DIMENSIONS ARE IN INCHES, UNLESS GIVEN DIFFERENTLY.
- MACHINED SURFACES MUST HAVE A FINISH OF 125 MICHROINCHES R_a, UNLESS GIVEN DIFFERENTLY.
- WHEN YOU USE THIS REPAIR REFER TO:
  - AMM 51-21 FOR INTERIOR AND EXTERIOR FINISHES
  - NDT PART 6, 51-00-00 FOR SURFACE INSPECTION OF ALUMINUM PARTS
  - SOPM 20-44-04 FOR THE APPLICATION OF URETHANE COMPATIBLE FINISHES
  - SRM 51-00-6 FOR REPAIR CATEGORIES, DEFINITIONS AND REPAIR ASSESSMENT PROGRAM INFORMATION
  - SRM 51-10-1 FOR INSPECTION AND REMOVAL OF DAMAGE AND STOP DRILLING PROCEDURES
  - SRM 51-10-2 FOR PROTECTIVE TREATMENT OF METALS
  - SRM 51-20-1 FOR SHEET METAL MATERIALS
  - SRM 51-20-4 FOR REPAIR SEALING
  - SRM 51-30 FOR FASTENER CODE, REMOVAL, INSTALLATION, HOLE SIZES EDGE MARGINS AND SUBSTITUTION
  - SRM 51-30-8 FOR COUNTERSINKING AND USE OF COUNTERSINK REPAIR WASHER
  - SRM 51-70 FOR AERODYNAMIC SMOOTHNESS.

[A] THE THICKNESS OF THE FILLER MUST BE THE SAME AS THE THICKNESS OF THE PARTS THAT WERE CUT AWAY.

[B] DO NOT CHAMFER THIS EDGE UNDER THE SCUFF PLATE.

[C] CUT THE EDGES OF THE REPAIR PLATES ALONG THE DOOR CUTOUT TO ALIGN WITH THE SHAPE OF THE INITIAL SKIN CUTOUT.

[D] DO NOT CHAMFER THE EDGES OF THE REPAIR PLATES ALONG THE DOOR CUTOUT. THE MACHINED RADII OF THESE EDGES MUST HAVE A FINISH OF 63 MICROINCHES R_a OR BETTER.

[E] THE EDGE MARGIN BETWEEN THE EDGE OF THE CUTOUT AND THE NEAREST FASTENER MUST BE A MINIMUM OF 2D.

[F] MAKE THE EDGES OF THE CUTOUT SMOOTH TO A FINISH OF 63 MICROINCHES R_a OR BETTER.

[G] MAKE A CONTINUOUS 2.05 INCH LONG TAPER FROM 0.10 TO 0.06 INCH ALONG THE TOP SURFACE OF THE PART.

[H] MAKE A CONTINUOUS 4.3 INCH LONG TAPER FROM 0.12 TO 0.02 INCH ALONG THE TOP SURFACE OF THE PART.

Fuselage Skin Repair - Aft Galley and Aft Entry Door Cutouts Lower Forward Corner
Figure 24 (Sheet 2)

BOEING PROPRIETARY - Copyright © - Unpublished Work - See title page for details.

NOTES (CONTINUED)

[I] MAKE A CONTINUOUS 4.0 INCH LONG TAPER FROM 0.09 TO 0.01 INCH ALONG THE TOP SURFACE OF THE PART.

[J] FOR AIRPLANES WITH THE VARIABLE SCUFF PLATE, CUT THE SCUFF PLATE SO IT DOES NOT GO OVER THE PART 5 INNER PLATE.

[K] DO NOT CHAMFER THE EDGE OF THE INNER PLATE PARTS IF IT MEETS THE VARIABLE SCUFF PLATE (IF PRESENT).

[L] DO NOT CONSIDER THE THRESHOLD/SCUFF PLATE ATTACHMENT FASTENERS AS REPAIR FASTENERS.

[M] MAKE THE FASTENER SPACING 5D TO 6D FOR THE REPAIR FASTENERS.

[N] IF THE AIRPLANE HAS LESS THAN 66,000 FLIGHT CYCLES, THE INSPECTION THRESHOLD IS THE EARLIER OF:

- THE INITIAL SCHEDULED INSPECTION AS GIVEN IN THE OPERATOR'S REPAIR ASSESSMENT PROGRAM (RAP)
- 66,000 FLIGHT CYCLES.

IF THE AIRPLANE HAS MORE THAN 66,000 FLIGHT CYCLES AND THE INITIAL SCHEDULED SUPPLEMENTAL STRUCTURAL INSPECTION DOCUMENT (SSID) INSPECTION HAS BEEN PERFORMED, THE INSPECTION THRESHOLD IS:

- THE NEXT SCHEDULED SSID INSPECTION FOR THE STRUCTURALLY SIGNIFICANT ITEMS F-16A, F-17A AND F-18A IN THE REPAIRED AREA.

[O] IF THE AIRPLANE HAS MORE THAN 66,000 FLIGHT CYCLES, DO THE NEW INSPECTION ALTERNATIVE AT THE SUBSEQUENT SCHEDULED SSID INSPECTION FOR F-16, F-17 AND F-18 ON THIS AIRPLANE.

FASTENER SYMBOLS

REFERENCE FASTENER LOCATION.

REPAIR FASTENER LOCATION. INSTALL A BACR15CE6D RIVET. COUNTERSINK THE HOLE ON THE TWO SIDES OF THE STRUCTURE.

INITIAL FASTENER LOCATION. INSTALL A BACR15CE6D RIVET. COUNTERSINK THE HOLE ON THE TWO SIDES OF THE STRUCTURE.

INITIAL FASTENER LOCATION. INSTALL A BACB30FQ6A HEX DRIVE BOLT WITH A BACC30M COLLAR.

REPAIR FASTENER LOCATION. INSTALL A BACB30FQ6A HEX DRIVE BOLT WITH A BACC30M COLLAR.

INITIAL THRESHOLD/SCUFF PLATE/REVEAL PLATE FASTENER LOCATION. INSTALL SAME TYPE AND DIAMETER FASTENER AS THE INITIAL FASTENER. INCREASE THE GRIP LENGTH AS NECESSARY. [L]

REPAIR MATERIAL			
PART		QTY	MATERIAL
1	OUTER PLATE	1	0.100 INCH CLAD 2024-T3
2	MIDDLE PLATE	1	0.063 INCH CLAD 2024-T3
3	TAPERED FILLER	1	0.100 INCH CLAD 2024-T3
4	TAPERED FILLER	1	0.125 INCH CLAD 2024-T3
5	INNER PLATE	1	0.063 INCH CLAD 2024-T3
6	TAPERED FILLER	1	0.080 INCH CLAD 2024-T3
7	FILLER	1	2024-T3 [A]

TABLE I

Fuselage Skin Repair - Aft Galley and Aft Entry Door Cutouts Lower Forward Corner
Figure 24 (Sheet 3)

BOEING PROPRIETARY - Copyright © - Unpublished Work - See title page for details.

SUBSEQUENT INSPECTIONS ARE NECESSARY FOR A CATEGORY B REPAIR. REFER TO TABLE II FOR THE INSPECTION REQUIREMENTS.

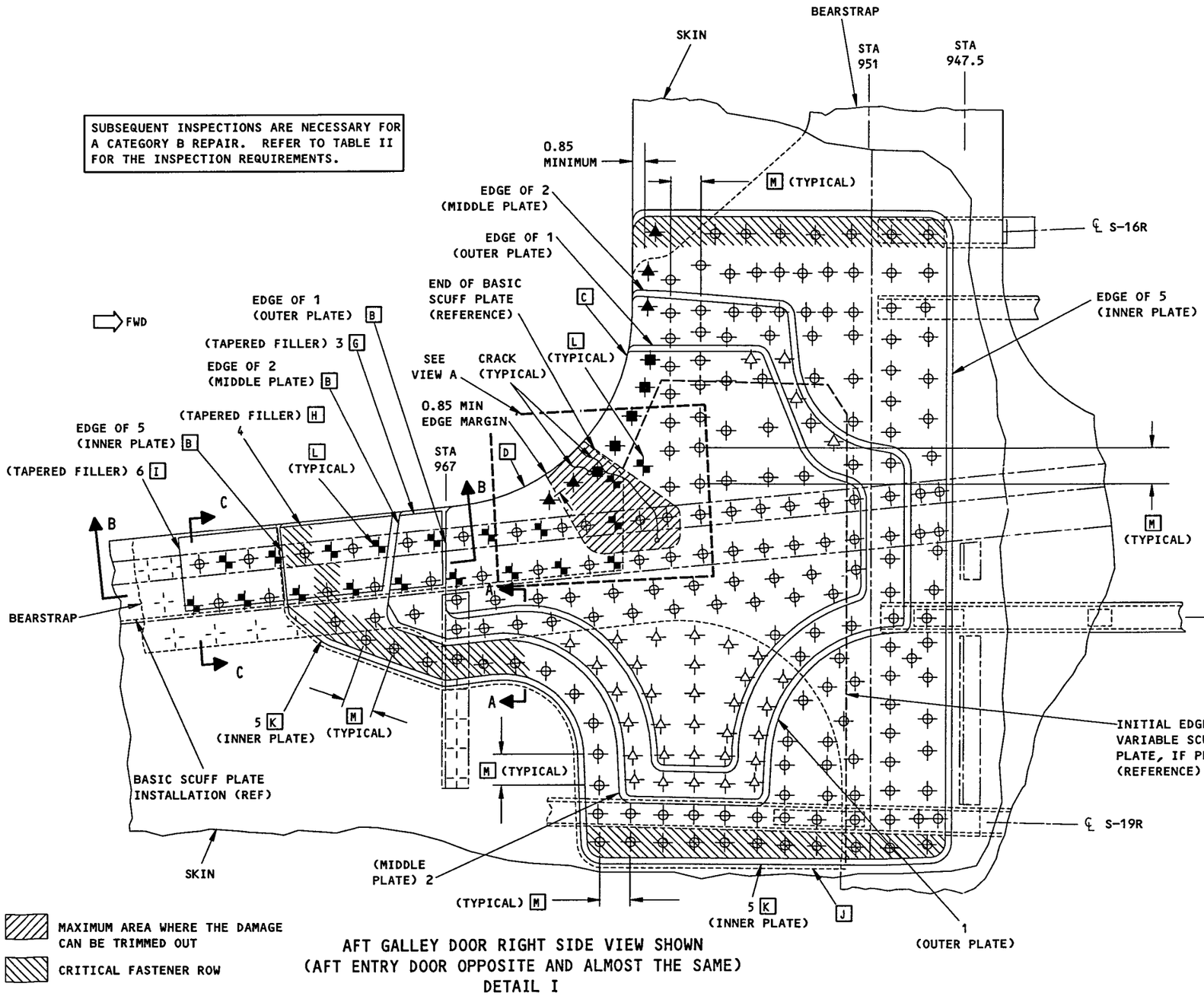

AFT GALLEY DOOR RIGHT SIDE VIEW SHOWN
(AFT ENTRY DOOR OPPOSITE AND ALMOST THE SAME)
DETAIL I

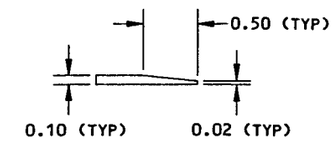

TYPICAL CHAMFER AROUND THE EDGES OF PARTS 2, 5 AND 1 UNLESS GIVEN DIFFERENTLY
(ONLY PART 1 SHOWN FOR CLARITY)

SECTION A-A

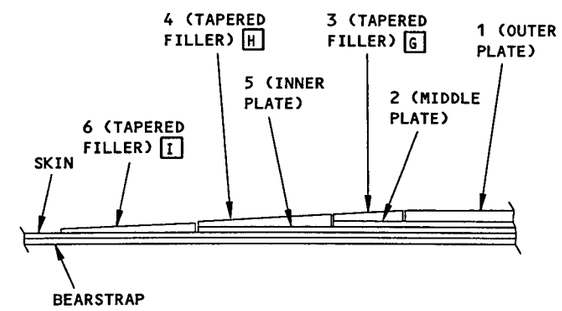

LAYOUT OF REPAIR PLATES AND TAPERED FILLERS
SECTION B-B

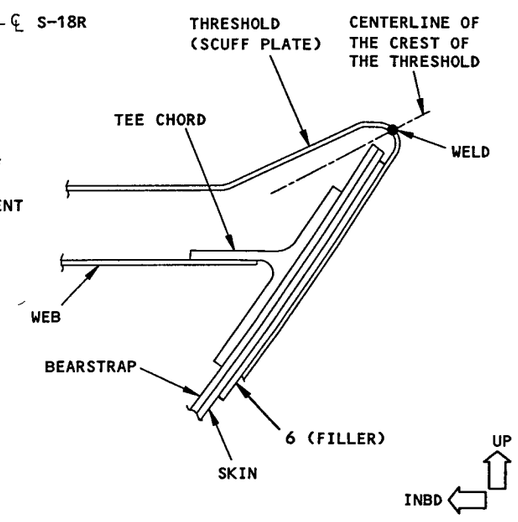

THRESHOLD WELD
SECTION C-C

Fuselage Skin Repair - Aft Galley and Aft Entry Door Cutouts Lower Forward Corner
Figure 24 (Sheet 4)

BOEING PROPRIETARY - Copyright © - Unpublished Work - See title page for details.

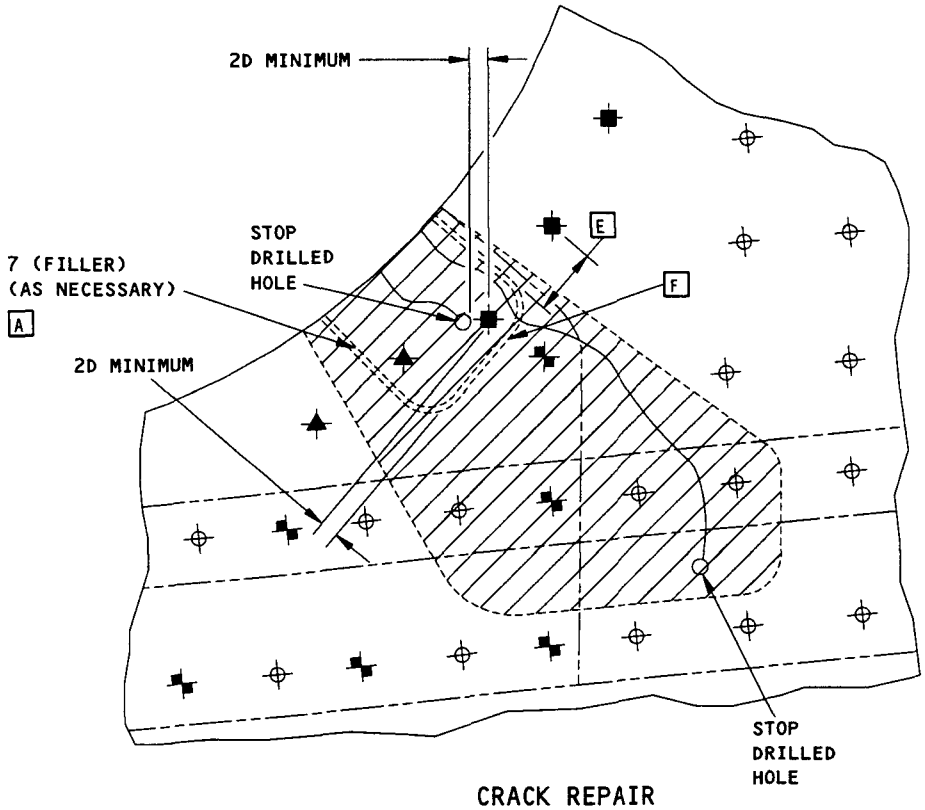

CRACK REPAIR
VIEW A

Fuselage Skin Repair - Aft Galley and Aft Entry Door Cutouts Lower Forward Corner
Figure 24 (Sheet 5)

BOEING PROPRIETARY - Copyright © - Unpublished Work - See title page for details.

CATEGORY B REPAIR AND SSI F-16A, F-17A, AND F-18A INSPECTION REQUIREMENTS					
TYPE OF STRUCTURE	INSPECTION THRESHOLD	ALTERNATIVE	REPEAT INSPECTION		
			METHOD	INTERVAL	REFERENCES
AFT ENTRY AND GALLEY DOORS	N	A	MEDIUM FREQUENCY EDDY CURRENT (MFEC)	24,000 FLIGHT CYCLES	737 NDT, PART 6, 53-30-00, FIGURE 6
			GENERAL VISUAL (SURVEILLANCE) INSPECTION		
		B	LOW FREQUENCY EDDY CURRENT (LFEC)	4,000 FLIGHT CYCLES	737 NDT, PART 6, 53-30-00, FIGURE 5

NOTE: 1 - USE ALTERNATIVE A FOR INTERNAL INSPECTION OF THE SKIN, BEARSTRAP, FRAME AND SILL OUTER CHORD. REFER TO DETAIL II FOR THE INSPECTION AREAS.

2 - USE ALTERNATIVE B FOR EXTERNAL INSPECTION OF THE SKIN AND BEARSTRAP THROUGH THE PART 5 INNER PLATE. REFER TO DETAIL III FOR THE INSPECTION AREA.

TABLE II

Fuselage Skin Repair - Aft Galley and Aft Entry Door Cutouts Lower Forward Corner
Figure 24 (Sheet 6)

BOEING PROPRIETARY - Copyright © - Unpublished Work - See title page for details.

SKIN AND BEARSTRAP INSPECTION AREAS. DO AN MFEC INSPECTION OF THE SKIN AND BEAR STRAP INTERNALLY AROUND THE FIRST ROW OF FASTENERS ALONG THE EDGE OF THE PART 5 INNER PLATE.

GENERAL VISUAL (SURVEILLANCE) INSPECTION AREAS. INSPECT THE FRAMES AND SILL OUTER CHORD INTERNALLY.

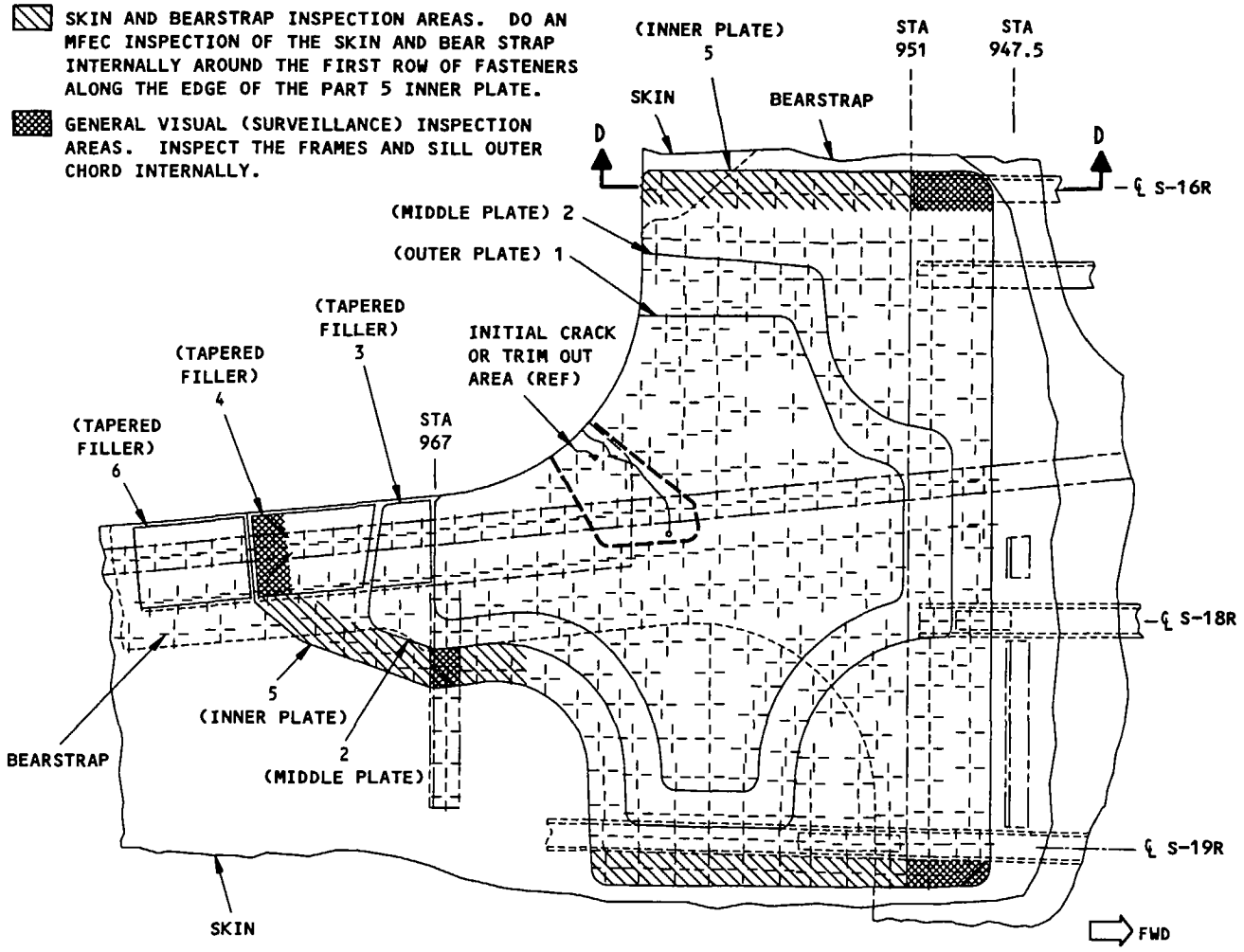

INSPECTION AREAS FOR ALTERNATIVE A
DETAIL II

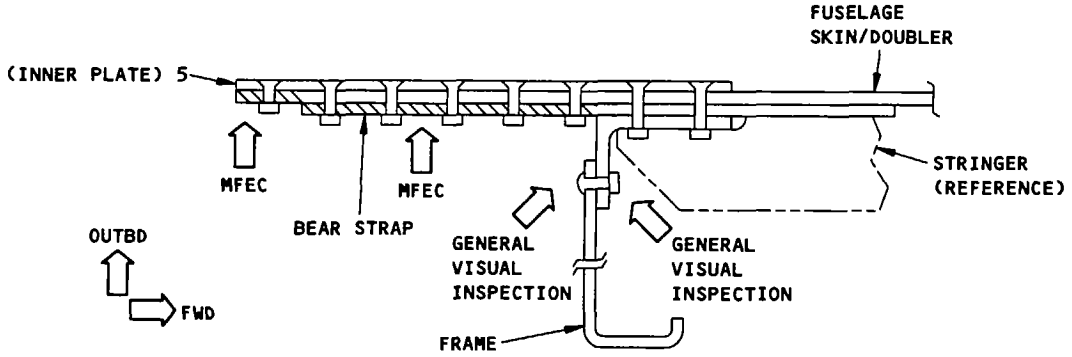

SECTION D-D

Fuselage Skin Repair - Aft Galley and Aft Entry Door Cutouts Lower Forward Corner
Figure 24 (Sheet 7)

BOEING PROPRIETARY - Copyright © - Unpublished Work - See title page for details.

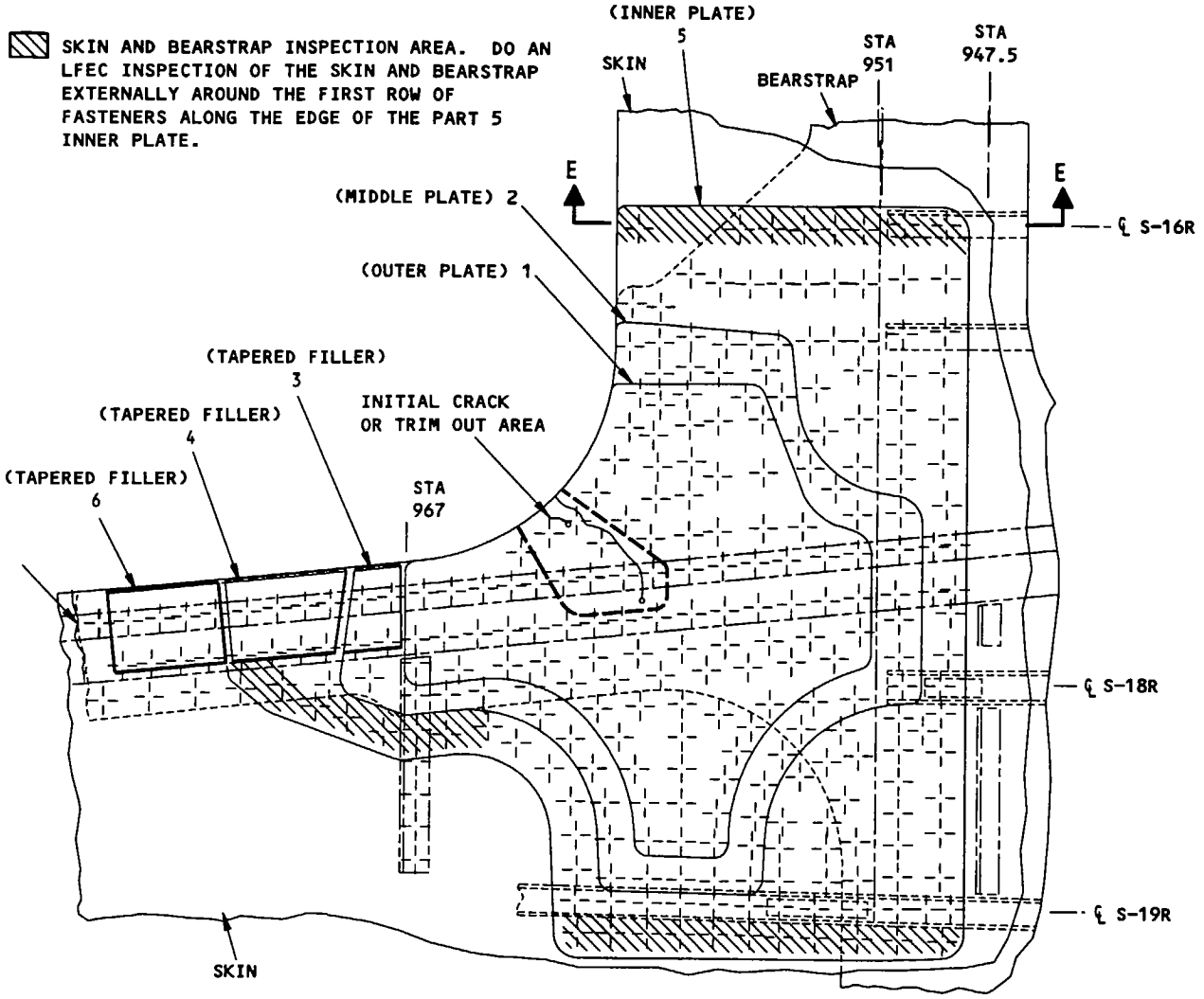

INSPECTION AREAS FOR ALTERNATIVE B
DETAIL III

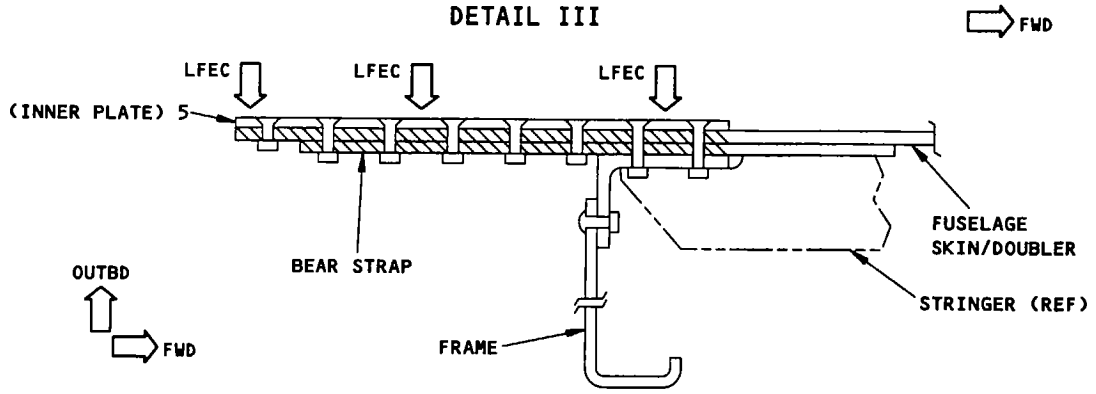

SECTION E-E

Fuselage Skin Repair - Aft Galley and Aft Entry Door Cutouts Lower Forward Corner
Figure 24 (Sheet 8)

BOEING PROPRIETARY - Copyright © - Unpublished Work - See title page for details.

SSI NUMBER F-16C AND F-17C INSPECTION REQUIREMENTS			
INSPECTION THRESHOLD	REPEAT INSPECTION		
	METHOD	INTERVAL	REFERENCE
66,000 FLIGHT CYCLES AFTER AIRPLANE DELIVERY [0]	HIGH FREQUENCY EDDY CURRENT (HFEC)	24,000 FLIGHT CYCLES	737 NDT, D6-37239, PART 6, 51-00-00, FIG. 4 OR 23

NOTE: INSPECT THE FRAME CHORD WITH HFEC METHOD INTERNALLY IN THE REPAIR AREA AS SHOWN IN DETAIL IV. IN ADDITION, INSPECT THE SKIN, BEARSTRAP, FRAMES AND SILLS PER THE EXISTING INTERNAL INSPECTIONS GIVEN IN THE 737 SSID DOCUMENT FOR F-16B AND C, F-17B AND C, AND F-18B.

TABLE III

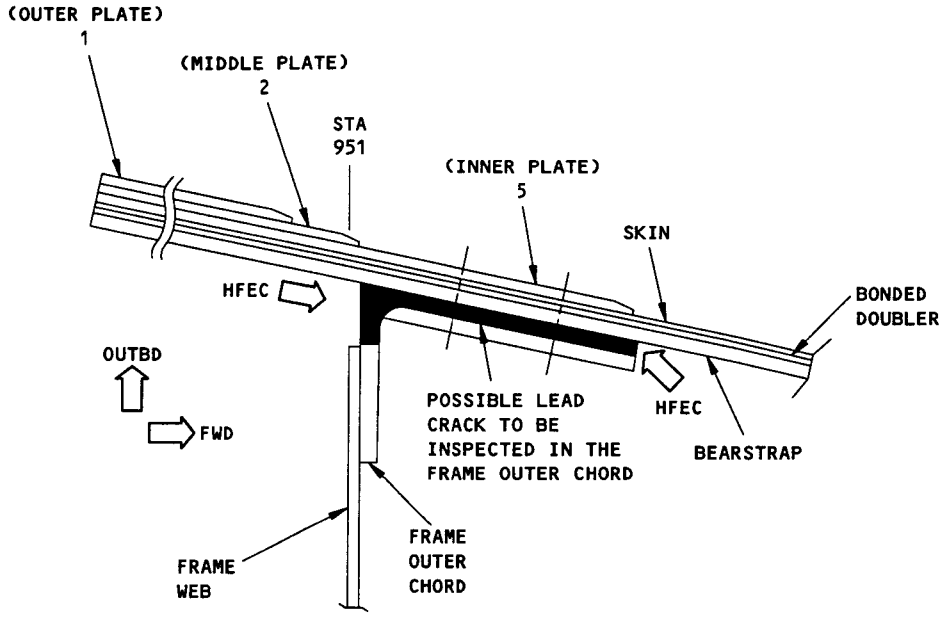

(INSPECTION AREA FOR F-16C SHOWN,
INSPECTION AREA FOR F-17C IS ALMOST THE SAME)
DETAIL IV

Fuselage Skin Repair - Aft Galley and Aft Entry Door Cutouts Lower Forward Corner
Figure 24 (Sheet 9)

BOEING PROPRIETARY - Copyright © - Unpublished Work - See title page for details.

APPLICABILITY

THIS REPAIR IS APPLICABLE FOR SKIN CRACKS, WITH DOUBLER DISBONDING, ALONG STRINGER S-17 IN AREAS WITH DOUBLER POCKETS ON ONE OR BOTH SIDES OF S-17 FROM BS 360 TO BS 540 AND FROM BS 727 TO BS 907.

FOR CRACKS IN DOUBLER, CONTACT BOEING.

REPAIR INSTRUCTIONS

1. Remove sufficient fasteners to permit separation of the skin and doubler.
2. Separate the resin bonded doublers from the damaged skins using the methods given in SRM 51-40-5.
3. Temporarily insert a 0.032 inch thick steel protective sheet between the skin and the doubler.
4. Cut out and remove the damaged portion of the skin as shown in Detail I.
5. Make the repair parts given in Table I. Use either repair method I or II. Make the surface contour of the repair parts the same as the surface contour of the skin panel.

   NOTE: Repair method II must be used in areas where the wing to body fairing crosses stringer S-17. Use a tapered filler, as necessary, in this case along the fairing fastener line for the step between the skin and repair part 1.
6. Assemble the repair parts. See Detail I.
7. Drill the fastener holes.

   NOTE: If there are more than three initial fastener holes, one after another, in one of the critical fastener rows, these holes can be zero-timed. This will make the inspection threshold start from the time the repair was installed. Refer to the paragraph "Hole Preparation for Repairs" in SRM 51-10-1 for the zero-timing procedure.
8. Disassemble the repair parts.
9. Remove all nicks, scratches, burrs, sharp edges and corners from the initial skins and the repair parts.
10. Apply a protective chemical conversion coating to the repair parts and the cut edges of the initial parts. Refer to SRM 51-10-2.
11. Apply one coat of BMS 10-79, Type II or III primer to repair parts and the cut edges of the initial parts. Refer to SOPM 20-44-04.
12. Install countersink repair washers as necessary. Refer to SRM 51-30-8.
13. Install the repair parts with BMS 5-95 sealant between the mating surfaces. Refer to SRM 51-20-4.
14. Install the fasteners given in Table I wet with BMS 5-95 sealant.
15. Apply a fillet seal with BMS 5-95 sealant along the edges of the repair parts or to the gap between the parts. Refer to SRM 51-20-4.
16. Apply the finish to the repair area. Refer to AMM 51-21.
17. Apply corrosion inhibiting compound on the internal surfaces. Refer to SRM 51-10-2.

NOTES

- THIS REPAIR IS CATEGORY A AND NO SUPPLEMENTAL INSPECTIONS ARE NECESSARY IF CONDITION 1 OR 2 IS MET:
  1. a) THE CRITICAL FASTENER ROWS IN THE SKIN, DOUBLER OR TEARSTRAP CAN BE VISUALLY INSPECTED FROM THE INSIDE
     b) THE BASE SKIN THICKNESS IS EQUAL TO OR GREATER THAN 0.056 INCH.
     c) THE REPAIR IS NOT WITHIN 10 INCHES OF A CUTOUT.
  2. a) THE LENGTH OF THE REPAIR PLATE, IN THE LONGITUDINAL DIRECTION, IS LESS THAN OR EQUAL TO 12 INCHES
     b) THE CRITICAL FASTENER ROWS IN THE SKIN, DOUBLER OR TEARSTRAP CAN BE VISUALLY INSPECTED FROM THE INSIDE
     c) NO OTHER REPAIR PLATE IS INSTALLED WITHIN 9 INCHES IN THE LONGITUDINAL DIRECTION
     d) THE REPAIR IS NOT WITHIN 10 INCHES OF A CUTOUT.
- IF THIS REPAIR IS NOT CATEGORY A, THEN IT IS CATEGORY B. THE CATEGORY B REPAIR HAS FAA APPROVAL IF YOU DO THE SUPPLEMENTAL INSPECTIONS GIVEN IN THE REPAIR ASSESSMENT PROGRAM. THE DAMAGE TOLERANCE ASSESSMENT OF THE REPAIR CAN BE DONE WITHIN THE TIME LIMIT SPECIFIED IN THE REPAIR ASSESSMENT PROGRAM AFTER YOU RELEASE THE AIRCRAFT TO SERVICE. REFER TO SRM 51-00-6 FOR GENERAL DATA ABOUT THE REPAIR ASSESSMENT PROGRAM. REFER TO TABLE II FOR INSPECTION REQUIREMENTS. SEE DETAIL II FOR THE INSPECTION AREA.

DO NOT USE OBSOLETE AFTER JULY 10, 2003
SEE FIGURE 8 OR FIGURE 9

Fuselage Skin - External Repair at Stringer S-17
Figure 25 (Sheet 1)

BOEING PROPRIETARY - Copyright © - Unpublished Work - See title page for details.

NOTES (CONT)

- THIS REPAIR, WHEN INSTALLED UNDER THE WING-TO-BODY FAIRING, WILL HAVE AN EFFECT ON THE STRUCTURAL SIGNIFICANT ITEM (SSI) NUMBER F-41, BUT THE INTERNAL INSPECTION ALTERNATIVE IS STILL APPLICABLE. THEREFORE, NO NEW INSPECTION ALTERNATIVES ARE NECESSARY FOR THIS REPAIR. DO THE INSPECTION FOR F-41, IF NECESSARY, AT THE SUBSEQUENT SUPPLEMENTAL STRUCTURAL INSPECTION DOCUMENT (SSID) INSPECTION ON THIS AIRPLANE. REFER TO SRM 51-00-4, FIGURE 3 FOR THE APPLICABLE SSI DATA.
- REFER TO THE SECTIONS THAT FOLLOW WHEN USING THIS REPAIR:
  - AMM 51-21 FOR INTERIOR AND EXTERIOR FINISHES
  - SOPM 20-44-04 FOR APPLICATION OF CORROSION RESISTANT PRIMER
  - SRM 51-00-6 FOR REPAIR CATEGORIES, DEFINITIONS AND REPAIR ASSESSMENT PROGRAM INFORMATION
  - SRM 51-10-2 FOR PROTECTIVE TREATMENT OF METALS
  - SRM 51-20-4 FOR SEALING OF REPAIRS
  - SRM 51-30 FOR FASTENER CODE, REMOVAL, INSTALLATION, HOLE SIZES, EDGE MARGINS AND SUBSTITUTION
  - SRM 51-30-8 FOR COUNTERSINKING AND COUNTERSINK REPAIR WASHERS
  - SRM 51-40-5 FOR TREATMENT OF BONDED PARTS.

[A] INSTALL REPAIR WASHERS AT THE INITIAL FASTENER LOCATIONS AS NECESSARY.

[B] ADJUST THIS SPACING BETWEEN 0.60 AND 0.97 INCH AS NECESSARY TO KEEP 0.30 INCH EDGE MARGIN IN DOUBLER.

[C] USE INITIAL FASTENER LOCATIONS ALONG STIFFENER AND AT SHEAR TIES. ADJUST SHAPE OF REPAIR PART [1] TO KEEP 0.47 INCH EDGE MARGIN.

[D] MINIMUM DIAMETER OF DRIVEN HEAD TO BE 0.263 INCH.

[E] IF POSSIBLE, EXTEND THE REPAIR PLATE AN ADDITIONAL ROW PAST THE INITIAL FASTENER ROWS OF INTERNAL STRUCTURE. IF THE REPAIR PLATE ENDS ON INTERNAL STRUCTURE, THE REPAIR IS CATEGORY B [G].

NOTE: INTERNAL STRUCTURE INCLUDES STRINGERS, FRAMES, INTERCOSTALS, REINFORCING STRAPS OR OTHER STRUCTURE THAT IS ATTACHED TO THE SKIN WITH FASTENERS.

[F] REFER TO OPERATOR'S REPAIR ASSESSMENT GUIDELINES FOR THE REPEAT INSPECTION INTERVAL AND METHOD ALTERNATIVES.

[G] IF ONE OF THE CRITICAL FASTENER ROWS HAS MORE THAN THREE INITIAL FASTENER HOLES ONE AFTER ANOTHER, THE THRESHOLD STARTS:

- FROM THE TIME THE REPAIR WAS INSTALLED IF THE HOLES HAVE BEEN ZERO-TIMED
- FROM THE TIME THE AIRPLANE WAS DELIVERED IF THE HOLES HAVE NOT BEEN ZERO-TIMED.

FASTENER SYMBOLS

+ INITIAL FASTENER LOCATION. SEE TABLE I FOR FASTENER TYPE.

⊕ REPAIR FASTENER LOCATION. SEE TABLE I FOR FASTENER TYPE.

REPAIR METHOD	REPAIR MATERIAL				FASTENER ⊕ AND +	EDGE MARGIN (INCH)
	PART		QTY	MATERIAL		
I	[1]	PLATE	1	0.050 INCH CLAD 2024-T3	BACR15BB6D OR MS20470D6 [D]	0.47
	[2]	FILLER	1	CLAD 2024-T3 SAME GAGE AS SKIN		
II	[1]	PLATE	1	0.063 INCH CLAD 2024-T3	BACR15CE6D [D]	0.47
	[2]	FILLER	1	CLAD 2024-T3 SAME GAGE AS SKIN		

TABLE I

DO NOT USE OBSOLETE AFTER JULY 10, 2003
SEE FIGURE 48 OR FIGURE 49

Fuselage Skin - External Repair at Stringer S-17
Figure 25 (Sheet 2)

BOEING PROPRIETARY - Copyright © - Unpublished Work - See title page for details.

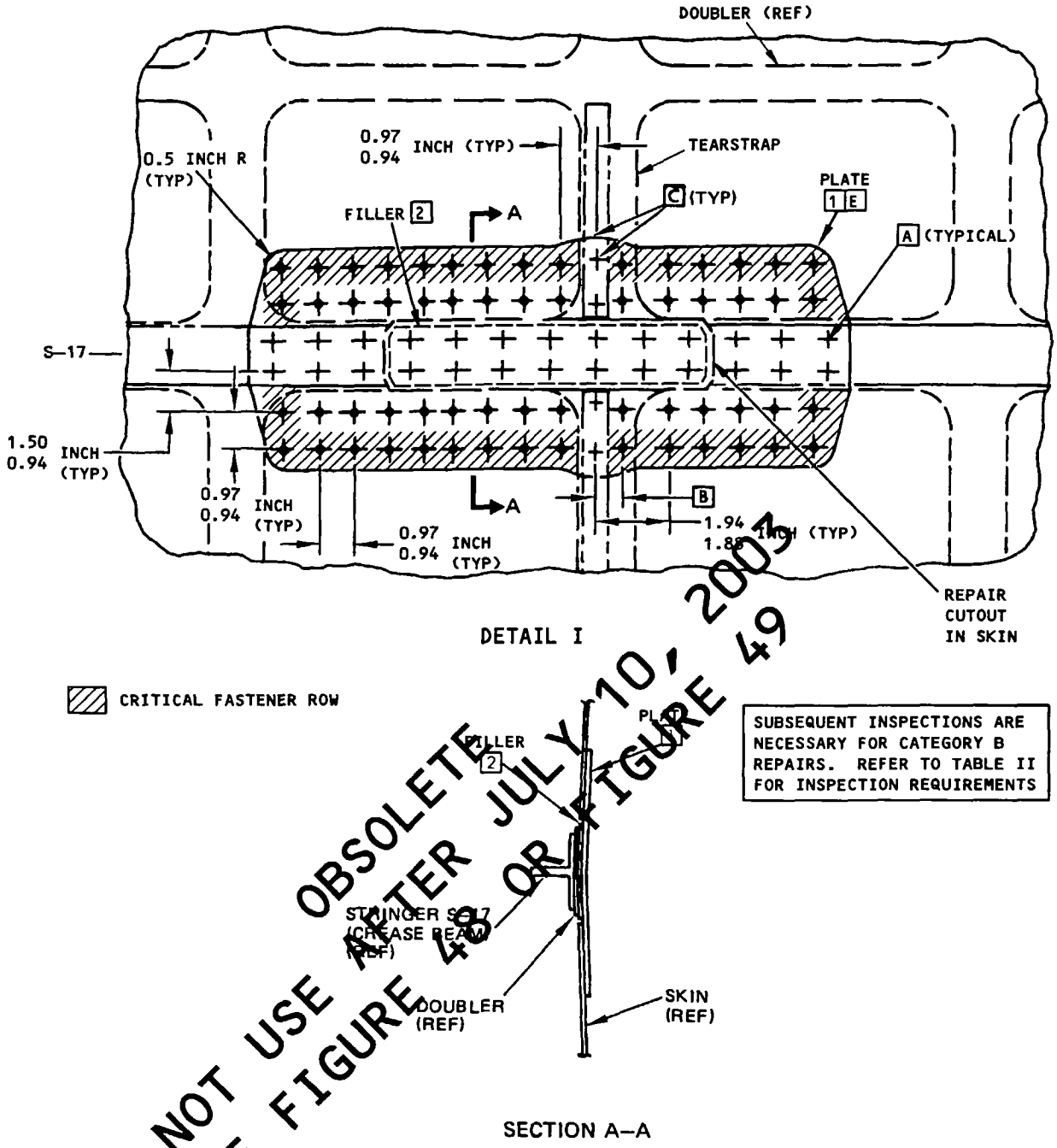

DO NOT USE AFTER JULY 10, 2003
SEE FIGURE 48 OR FIGURE 49
OBSOLETE

Fuselage Skin - External Repair at Stringer S-17
Figure 25 (Sheet 3)

BOEING PROPRIETARY - Copyright © - Unpublished Work - See title page for details.

CATEGORY B REPAIR INSPECTION REQUIREMENTS		
INSPECTION THRESHOLD	REPEAT INSPECTION ALTERNATIVES	
	METHOD	INTERVAL
60,000 CYCLES [G]	[F]	[F]
NOTE: Inspect skin, doubler and tearstrap around the first row of fasteners along the edge of the plate as shown in Detail II.		

TABLE II

OBSOLETE AFTER JULY 10, 2003
DO NOT USE FIGURE 48 OR FIGURE 49
SEE FIGURE 48

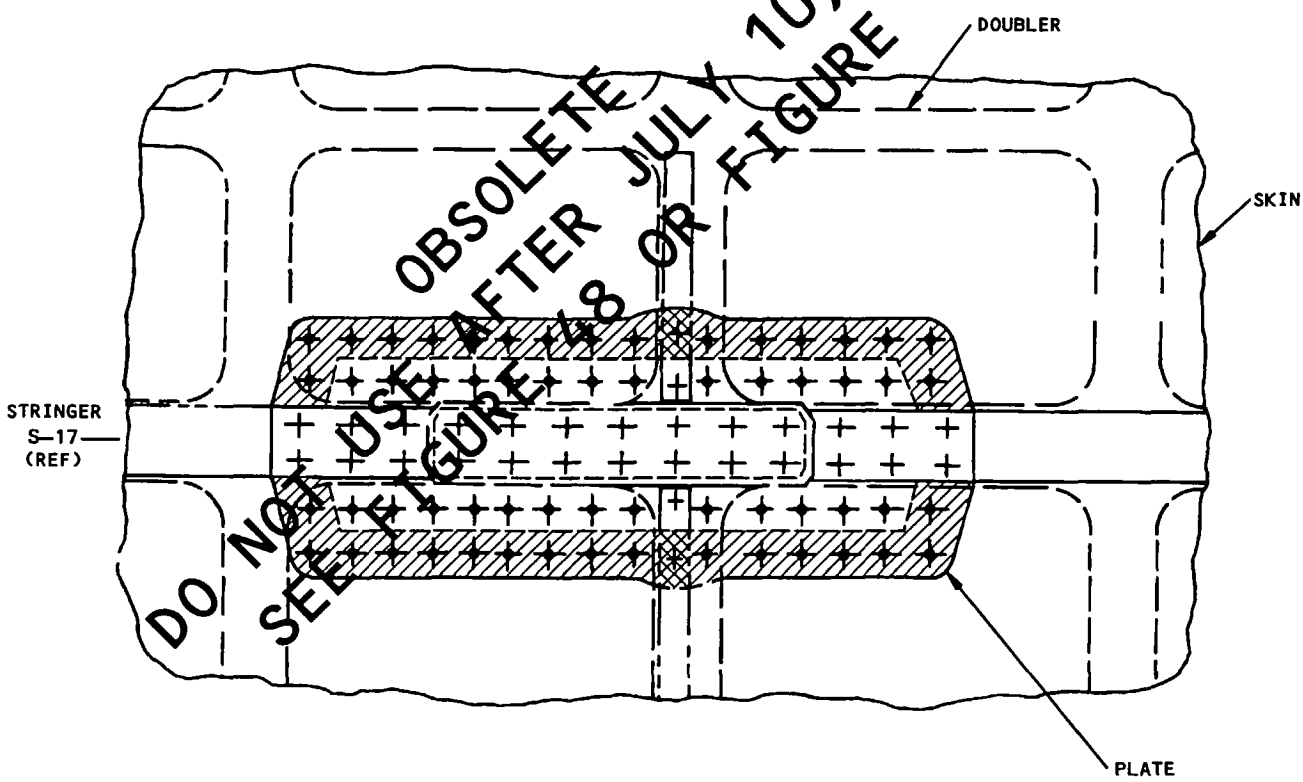

SKIN, DOUBLER OR TEARSTRAP INSPECTION AREA FOR ALL INSPECTION METHODS

ADDITIONAL SKIN INSPECTION AREA FOR LFEC INSPECTION ONLY

DETAIL II

Fuselage Skin - External Repair at Stringer S-17
Figure 25 (Sheet 4)

BOEING PROPRIETARY - Copyright © - Unpublished Work - See title page for details.

APPLICABILITY
THIS REPAIR APPLIES TO CRACKS WITHIN THE SHADED AREA IN DETAIL I.
TELL THE BOEING COMPANY:
- IF A CRACK GOES BEYOND THE SHADED AREA IN DETAIL I
- IF THERE IS DELAMINATION BETWEEN THE SKIN AND THE DOUBLER.

REPAIR INSTRUCTIONS

1. Remove the reveal, threshold and the fasteners as necessary from the repair area.
2. Before drilling a stop hole, put a corrosion resistant steel plate:
   - Between the bonded doubler and the strap, if only the skin and the doubler are damaged
   - Beneath the strap, if the strap is damaged.
3. Drill a stop drill hole at the end of the crack. Refer to SRM 51-10-1. If the crack stops at or goes through a fastener hole:
   - Oversize the hole to 0.25 inch
   - Do a high frequency eddy current test on the hole to make sure there are no cracks. If there are no cracks, make the hole larger by 0.063 diameter. Refer to SRM 51-10-1.
   - Install a plug in the hole, made from the shank of a 5/16 inch 2017-T3 rivet.
4. If the crack is less than 2D from a fastener hole, cut away:
   - The damaged skin and the bonded doubler or
   - The damaged skin, the bonded doubler and the strap

   See Detail II. Make sure that a minimum of 0.5 inch radius is kept. Do a HFEC inspection along the edge of the cutout. If no discrepancies are found, oversize cutout by 0.04 inch as an insurance cut. Refer to 737 NDT, Part 6, 51-00-00, Figure 4 or 23.

   NOTE: If a crack terminates at a fastener hole, then this hole must meet the requirements of a stop drill hole. Refer to SRM 51-10-1.
5. Do a HFEC inspection of all the initial fastener holes where the fasteners are removed in the repair area. Refer to NDT Part 6, 51-00-00 Figure 16 and 53-30-00 Figure 4.
6. Make the repair parts given in Table I.
   - Make parts 2 and 5, if the crack is only in the skin and the bonded doubler.
   - Make parts 1, 2, and 5, if the crack is in the strap , or in the skin, the bonded doubler, and the strap.
7. Assemble the repair parts. See Details I and III.
8. Drill the threshold/scuff plate attachment fastener holes through the repair parts only. Do not damage the initial parts.
9. Drill the fastener holes. Keep a 4D to 6D spacing on all fasteners. Keep a minimum 2D edge margin.
10. Disassemble the repair parts.
11. Remove the nicks, scratches, gouges, burrs, and sharp edges from the skin and the repair parts.
12. Apply a chemical conversion coating to the bare surfaces of the skin, and to the repair parts. Refer to SRM 51-10-2.
13. Apply primer to the bare surfaces of the skin and to the repair parts as follows:
    - Apply one layer of BMS 10-79, Type II primer to the repair parts
    - Apply one layer of BMS 10-79, Type II primer to the bare surfaces of the skin. Refer to SOPM 20-44-04.
14. Install repair washers in the countersink holes in the skin panel. Refer to SRM 51-30-8.
15. Install the repair parts and the reveal with BMS 5-95 sealant between the faying surfaces. If the reveal is slotted, fill the slots with BMS 5-95 sealant. Install all non-aluminum fasteners wet with BMS 5-95 sealant in transition fit holes. Fill the gaps between the fillers, and on the fasteners in the tapered edges, with BMS 5-95 sealant.
16. Apply a finish to the external surface of the repair area. Refer to AMM 51-21
17. Install the threshold as follows:

    CAUTION: DO NOT WELD THE THRESHOLD ON THE AIRPLANE.

    - Cut and weld the crest of the threshold as necessary to fit over the repair parts. See Section C-C. Refer to BAC 5977.
    - Sand the edges and outer surfaces, in a constant direction, with a 120 grit abrasive
    - Apply one layer of BMS 10-11, Type I primer to the inner surfaces of the threshold as given in SOPM 20-41-02.
    - Apply BMS 5-95 aerodynamic smoother all around the threshold at a 6:1 taper ratio.

Fuselage Skin Repair at Forward Galley Door Skin Cutout
Figure 26 (Sheet 1)

BOEING PROPRIETARY - Copyright © - Unpublished Work - See title page for details.

NOTES

- THIS REPAIR IS CATEGORY B. THE CATEGORY B REPAIR HAS FAA APPROVAL IF YOU DO THE SUPPLEMENTAL INSPECTIONS GIVEN IN TABLE II. INCORPORATION OF THESE INSPECTION REQUIREMENTS INTO THE AIRPLANE'S MAINTENANCE PROGRAM SATISFIES THE DAMAGE TOLERANCE ASSESSMENT OF THE REPAIR SPECIFIED BY THE REPAIR ASSESSMENT PROGRAM. THIS ASSESSMENT CAN BE DONE AFTER YOU RELEASE THE AIRPLANE TO SERVICE. REFER TO SRM 51-00-6 FOR GENERAL DATA ABOUT THE REPAIR ASSESSMENT PROGRAM. REFER TO DETAIL IV OR V FOR THE INSPECTION AREA.
- THIS REPAIR WILL HAVE AN EFFECT ON THE STRUCTURALLY SIGNIFICANT ITEM (SSI):
  - NUMBER F-15A AND B, BUT THE SUPPLEMENTAL INSPECTIONS GIVEN IN TABLE II WILL MEET THE SSID INSPECTION REQUIREMENTS FOR F-15A IN THE REPAIR AREA. HOWEVER, THE INSPECTION ALTERNATIVES FOR F-15B ARE STILL APPLICABLE.

  DO THE INSPECTIONS FOR F-15B AT THE SUBSEQUENT SUPPLEMENTAL STRUCTURAL INSPECTION DOCUMENT (SSID) INSPECTION ON THIS AIRPLANE. REFER TO SRM 51-00-4, FIGURE 3 FOR THE APPLICABLE SSI DATA.
- D = THE FASTENER DIAMETER
- MD = THE MEAN FASTENER DIAMETER (THE MEAN FASTENER DIAMETER EQUALS ONE HALF THE SUM OF THE FASTENER HEAD DIAMETER PLUS THE FASTENER SHANK DIAMETER.)
- ALL DIMENSIONS ARE IN INCHES.
- MACHINED SURFACES MUST HAVE A FINISH OF 125 MICROINCHES Ra OR BETTER, UNLESS OTHERWISE SPECIFIED.
- WHEN YOU USE THIS REPAIR REFER TO:
  - AMM 51-21 FOR INTERIOR AND EXTERIOR FINISHES
  - SOPM 20-41-02 FOR APPLICATION OF CHEMICAL AND SOLVENT RESISTANT FINISHES
  - SOPM 20-44-04 FOR APPLICATION OF URETHANE COMPATIBLE PRIMER
  - SRM 51-00-6 STRUCTURAL REPAIR DEFINITIONS
  - SRM 51-10-1 FOR INSPECTION AND REMOVAL OF DAMAGE
  - SRM 51-10-2 FOR PROTECTIVE TREATMENT OF METAL
  - SRM 51-20-4 FOR REPAIR SEALING
  - SRM 51-30 FOR FASTENER CODE, REMOVAL, INSTALLATION, HOLE SIZES AND EDGE MARGINS
  - SRM 51-30-8 FOR COUNTERSINKING AND USE OF COUNTERSINK REPAIR WASHER
  - SRM 51-70 FOR AERODYNAMIC SMOOTHNESS.

[A] CUT THE EDGES OF THE REPAIR PLATES ALONG THE DOOR CUTOUT TO ALIGN WITH THE SHAPE OF THE INITIAL SKIN CUTOUT.

[B] DO NOT CHAMFER THE EDGES OF THE REPAIR PLATES ALONG THE DOOR CUTOUT. THE MACHINED RADII OF THESE EDGES MUST HAVE A FINISH OF 63 MICROINCHES Ra OR BETTER.

[C] IF THE PART 1 OUTER PLATE IS INSTALLED, MAKE A CONTINUOUS TAPER FROM 0.16 ± 0.01 TO 0.04 ± 0.01; OTHERWISE, MAKE A CONTINUOUS TAPER FROM 0.060 ± 0.01 TO 0.01 ± 0.01.

[D] IF THE PART 1 OUTER PLATE IS INSTALLED, MAKE A CONTINUOUS TAPER FROM 0.10 ± 0.01 TO 0.01 ± 0.01; OTHERWISE, MAKE A CONTINUOUS TAPER FROM 0.060 ± 0.01 TO 0.01 ± 0.01.

[E] THE THICKNESS OF THIS FILLER MUST BE THE SAME AS THE TOTAL THICKNESS OF THE PARTS THAT WERE CUT AWAY.

[F] THE EDGE MARGIN BETWEEN THE EDGE OF THE FILLER AND THE NEAREST FASTENER MUST BE 0.375 INCH MINIMUM.

[G] MACHINE THE EDGE OF THE CUTOUT IN THE SKIN, THE BONDED DOUBLER, AND THE STRAP TO 63 MICROINCHES Ra OR BETTER.

[H] ONLY IF PART 1 OUTER PLATE IS USED.

[I] IF THE AIRPLANE HAS LESS THAN 66,000 FLIGHT CYCLES, THE INSPECTION THRESHOLD IS THE EARLIER OF:

- THE INITIAL SCHEDULED INSPECTION AS GIVEN IN THE OPERATOR'S REPAIR ASSESSMENT PROGRAM (RAP)
- 66,000 FLIGHT CYCLES.

IF THE AIRPLANE HAS MORE THAN 66,000 FLIGHT CYCLES AND THE INITIAL SCHEDULED SUPPLEMENTAL STRUCTURAL INSPECTION DOCUMENT (SSID) INSPECTION HAS BEEN PERFORMED, THE INSPECTION THRESHOLD IS:

- 24,000 FLIGHT CYCLES AFTER THE REPAIR WAS INSTALLED.

Fuselage Skin Repair at Forward Galley Door Skin Cutout
Figure 26 (Sheet 2)

BOEING PROPRIETARY - Copyright © - Unpublished Work - See title page for details.

FASTENER SYMBOLS

- REFERENCE FASTENER LOCATION
- INITIAL FASTENER LOCATION. INSTALL A BACR15DS7D RIVET.
- INITIAL FASTENER LOCATION. INSTALL A BACB30FQ6A HEX DRIVE BOLT WITH A BACC30M COLLAR.
- REPAIR FASTENER LOCATION. INSTALL A BACR15CE6D RIVET.
- REPAIR FASTENER LOCATION. INSTALL A BACB30FN6A HEX DRIVE BOLT WITH A BACC30M COLLAR.
- INITIAL THRESHOLD/SCUFF PLATE/REVEAL PLATE FASTENER LOCATION. INSTALL THE SAME TYPE AND DIAMETER FASTENER AS THE INITIAL FASTENER. INCREASE THE GRIP LENGTH AS NECESSARY.

REPAIR MATERIAL			
PART		QTY	MATERIAL
1	OUTER PLATE	1	0.10 CLAD 2024-T3
2	MIDDLE PLATE	1	0.063 CLAD 2024-T3
3	FILLER	1	0.10 CLAD 2024-T3 [H]
4	TAPERED FILLER	1	0.063 INCH THICK CLAD 2024-T3 OR 0.160 INCH THICK CLAD 2024-T3 [H]
5	INNER PLATE	1	0.063 CLAD 2024-T3
6	TAPERED FILLER	1	0.063 INCH THICK CLAD 2024-T3 OR 0.10 INCH THICK CLAD 2024-T3 [H]
7	FILLER	1	CLAD 2024-T3 [E]

TABLE I

Fuselage Skin Repair at Forward Galley Door Skin Cutout
Figure 26 (Sheet 3)

BOEING PROPRIETARY - Copyright © - Unpublished Work - See title page for details.

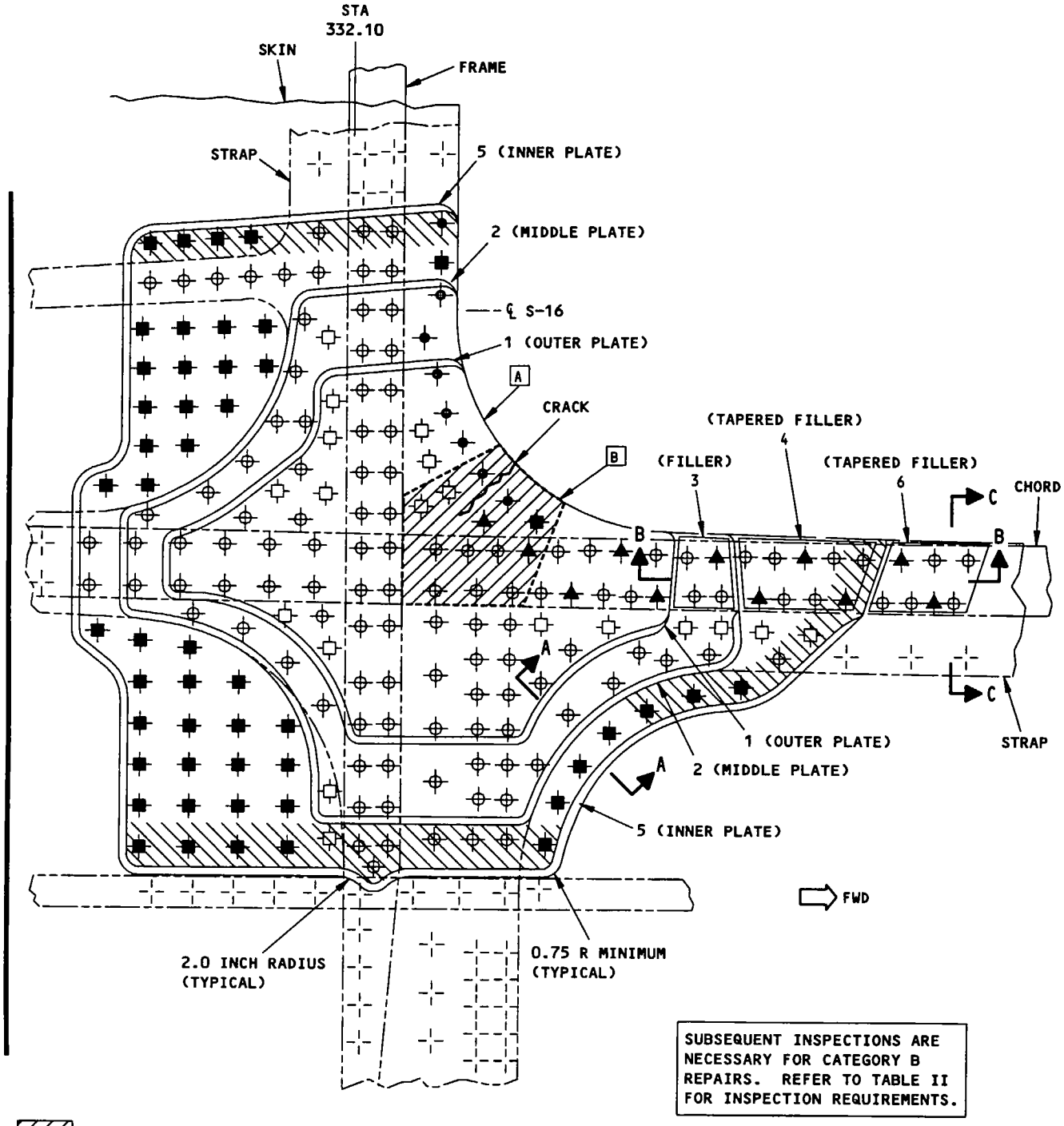

DETAIL I

Fuselage Skin Repair at the Forward Galley Door Skin Cutout
Figure 26 (Sheet 4)

BOEING PROPRIETARY - Copyright © - Unpublished Work - See title page for details.

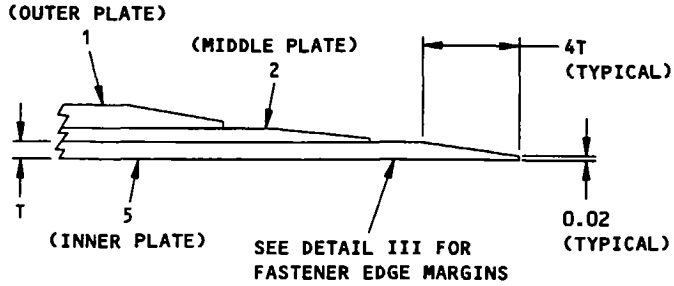

TAPER TYPICAL AROUND THE EDGE OF THE
REPAIR PLATES, EXCEPT AS NOTED
SECTION A-A

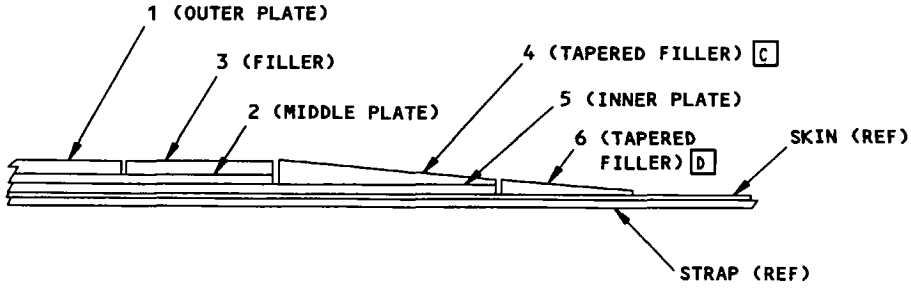

REPAIR PLATE AND FILLER LAYUP
SECTION B-B

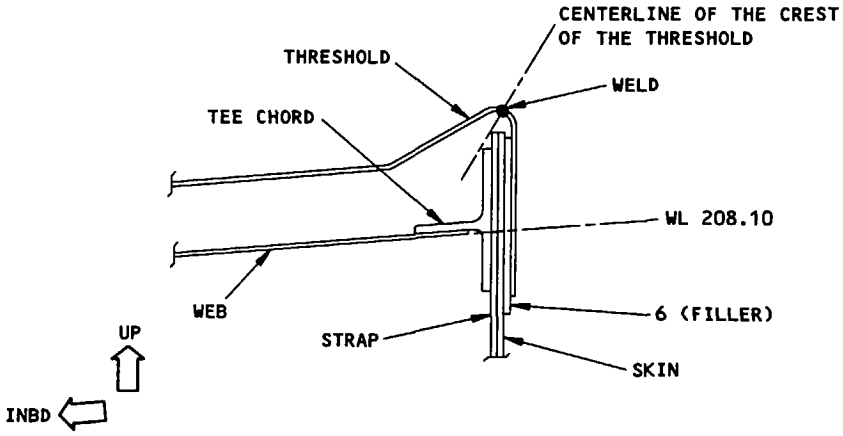

THRESHOLD WELD
SECTION C-C

Fuselage Skin Repair at Forward Galley Door Skin Cutout
Figure 26 (Sheet 5)

BOEING PROPRIETARY - Copyright © - Unpublished Work - See title page for details.

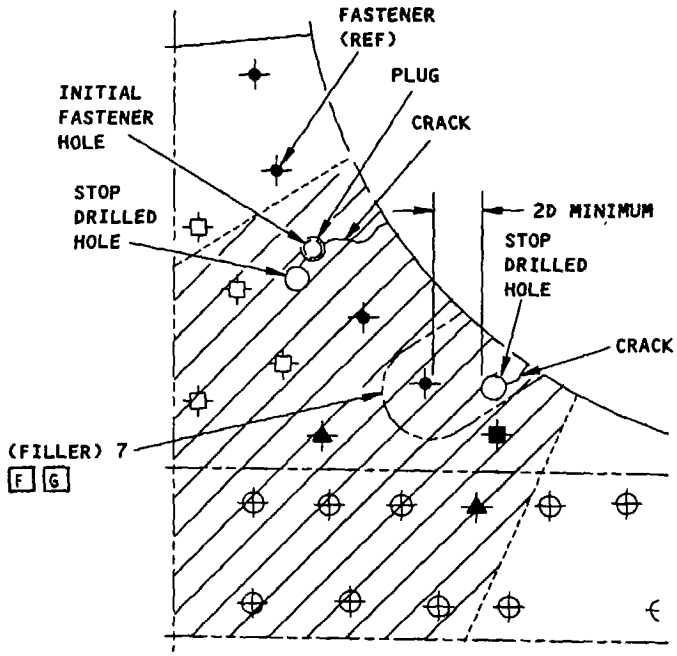

CRACK REPAIR
DETAIL II

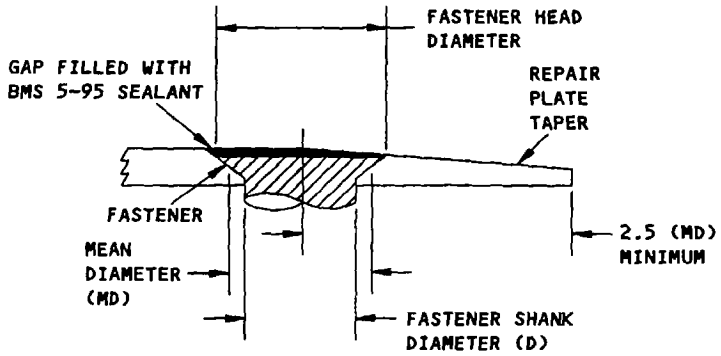

TYPICAL EDGE MARGIN ON
A TAPERED EDGE

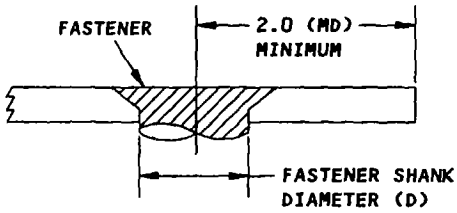

TYPICAL EDGE MARGIN ON
AN EDGE THAT IS NOT TAPERED

EDGE MARGINS
DETAIL III

Fuselage Skin Repair at Forward Galley Door Skin Cutout
Figure 26 (Sheet 6)

BOEING PROPRIETARY - Copyright © - Unpublished Work - See title page for details.

CATEGORY B REPAIR AND SSI F-15A INSPECTION REQUIREMENTS				
INSPECTION THRESHOLD	ALTERNATIVE	REPEAT INSPECTION ALTERNATIVES		
		METHOD	INTERVAL	REFERENCES
I	A	MEDIUM FREQUENCY EDDY CURRENT (MFEC)	24,000 FLIGHT CYCLES	737 NDT, PART 6, 53-30-00, FIGURE 6
		GENERAL VISUAL (SURVEILLANCE) INSPECTION		
	B	LOW FREQUENCY EDDY CURRENT (LFEC)	4,000 FLIGHT CYCLES	737 NDT, PART 6, 53-30-00, FIGURE 5

NOTE: 1 - ALTERNATIVE A IS FOR INTERNAL INSPECTION OF THE SKIN, BEAR STRAP, FRAME AND SILL OUTER CHORD. REFER TO DETAIL IV FOR THE INSPECTION AREAS. HOWEVER, THE ALTERNATIVE A IS NOT APPLICABLE IF THE PART 5 INNER PLATE ENDS ON A STRINGER.

2 - ALTERNATIVE B IS FOR EXTERNAL INSPECTION OF THE SKIN AND BEAR STRAP THROUGH THE PART 5 INNER PLATE. REFER TO DETAIL V FOR THE INSPECTION AREA.

TABLE II

Fuselage Skin Repair at Forward Galley Door Skin Cutout
Figure 26 (Sheet 7)

BOEING PROPRIETARY - Copyright © - Unpublished Work - See title page for details.

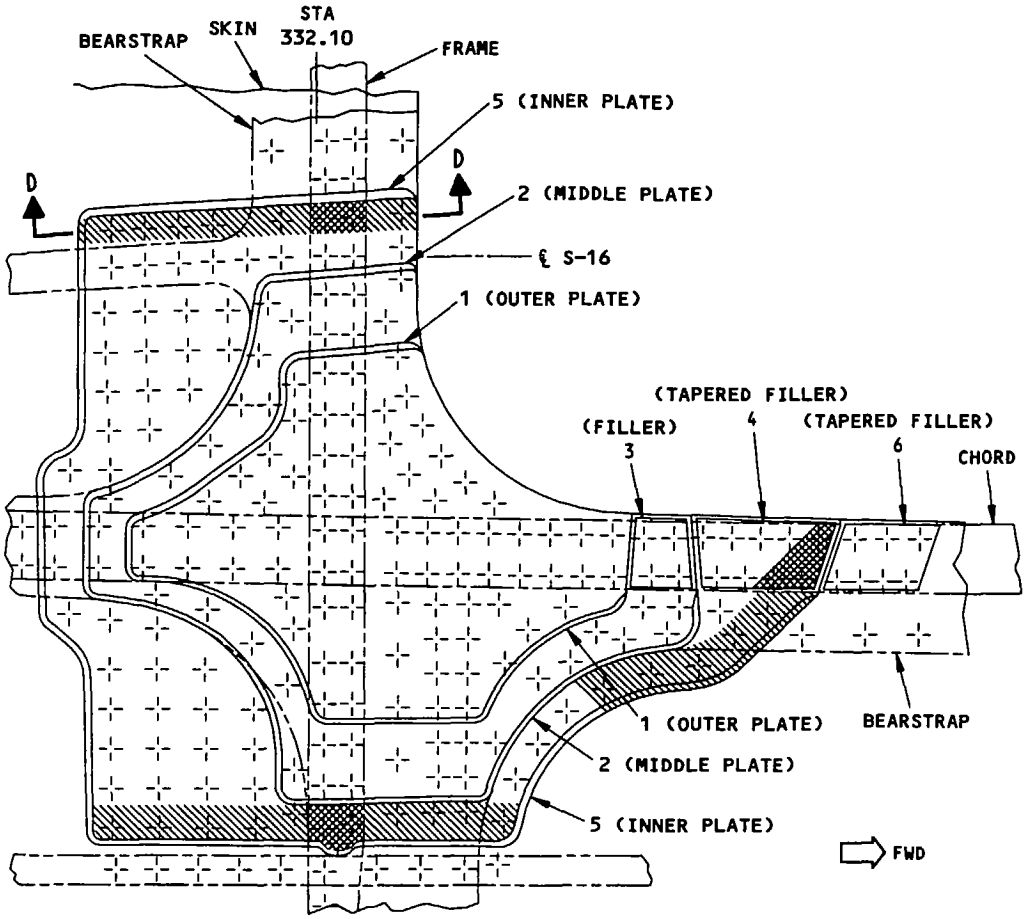

INSPECTION AREAS FOR ALTERNATIVE A
DETAIL IV

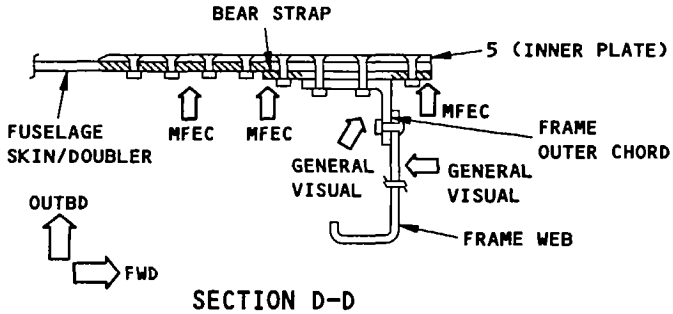

SECTION D-D

SKIN AND BEARSTRAP INSPECTION AREAS. DO A MFEC INSPECTION OF THE SKIN AND THE BEARSTRAP INTERNALLY AROUND THE FIRST ROW OF FASTENERS ALONG THE EDGE OF THE PART 5 INNER PLATE. YOU CANNOT USE THE INTERNAL MFEC METHOD IF THE PART 5 INNER PLATE ENDS ON A STRINGER.

GENERAL VISUAL (SURVEILLANCE) INSPECTION AREAS. INSPECT THE FRAMES AND SILL OUTER CHORD INTERNALLY.

Fuselage Skin Repair at Forward Galley Door Skin Cutout
Figure 26 (Sheet 8)

BOEING PROPRIETARY - Copyright © - Unpublished Work - See title page for details.

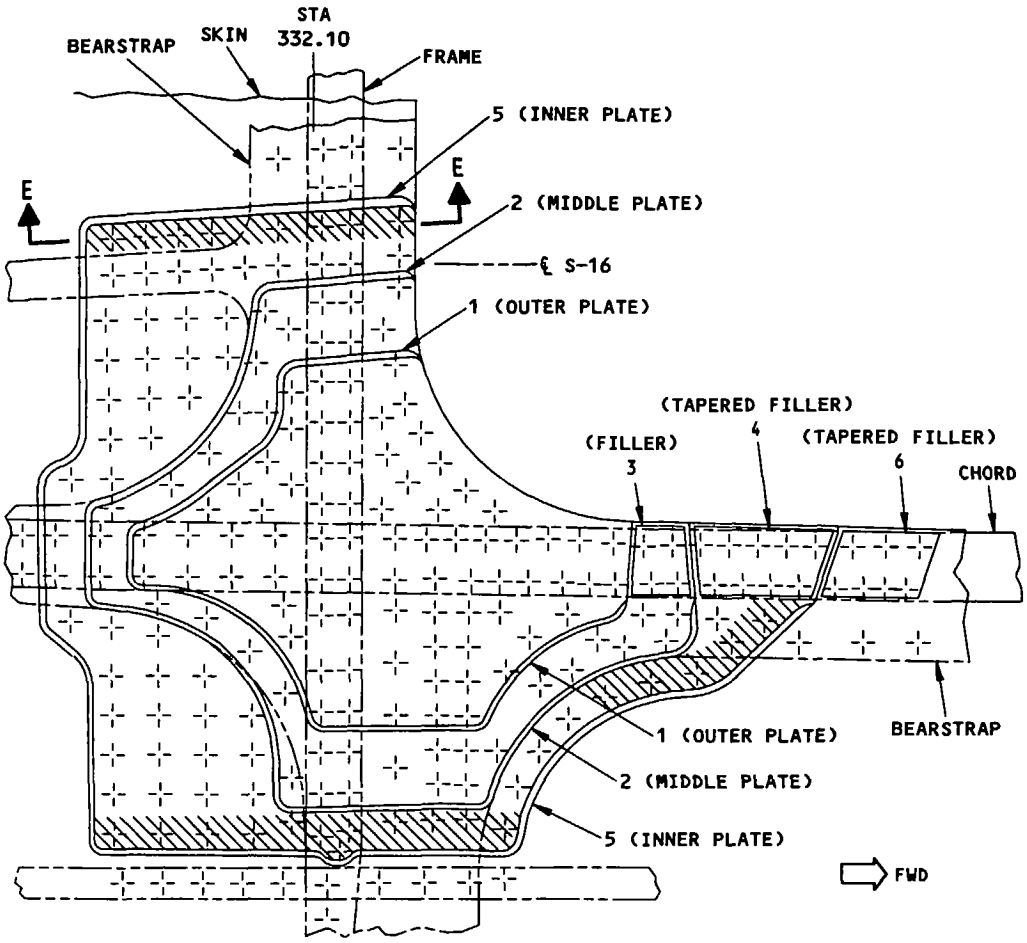

INSPECTION AREAS FOR ALTERNATIVE B
DETAIL V

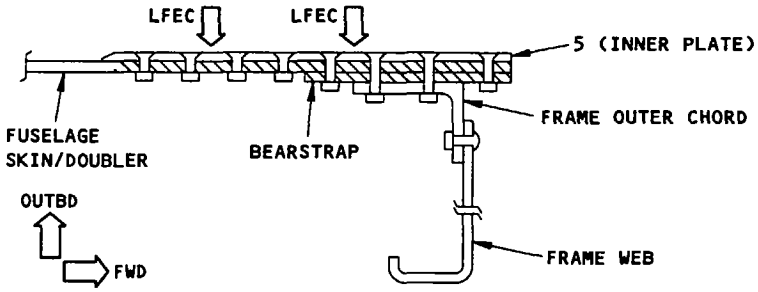

SECTION E-E

SKIN AND BEARSTRAP INSPECTION AREA. DO AN LFEC INSPECTION OF THE SKIN AND BEARSTRAP EXTERNALLY AROUND THE FIRST ROW OF FASTENERS ALONG THE EDGE OF THE PART 5 INNER PLATE.

Fuselage Skin Repair at Forward Galley Door Skin Cutout
Figure 26 (Sheet 9)

BOEING PROPRIETARY - Copyright © - Unpublished Work - See title page for details.

APPLICABILITY

- THIS CATEGORY C REPAIR IS APPLICABLE TO THE LONGITUDINAL LAP SPLICES OF FUSELAGE SKINS, WHEN ONLY THE UPPER SKIN IS DAMAGED.
- THIS REPAIR IS APPROVED FOR AIRPLANES WITH CUM LINE NUMBERS 1 THRU 291 ONLY FOR LAP SPLICE AREAS WHERE INITIAL FASTENERS ARE 3/16 DIAMETER OR LESS. FOR AREAS WITH INITIAL FASTENER DIAMETERS GREATER THAN 3/16, CONTACT THE BOEING COMPANY.
- REFER TO SRM 53-30-3, FIGURE 16 FOR A RECOMMENDED CATEGORY A OR B REPAIR.

REPAIR INSTRUCTIONS

1. Drill out the fasteners in the longitudinal lap splice as necessary.
2. Tape a stainless steel sheet (approximately 0.025 thick) to the fuselage skin below the damage as shown in SRM 51-40-5.
3. Carefully drive nylon or hardwood wedges between the upper and lower skins of the lap splices as shown in SRM 51-40-5.
4. Separate the resin bonded lower skin from the damaged upper skin as given in SRM 51-40-5.
5. Insert a sheet metal guard between the upper and lower skins and carefully cut away the damaged upper skin as shown in Detail I.
6. Remove the existing adhesive and clean up corrosion products on the exposed portion of the lower skin in lap splice area. Refer to SRM 51-10-2.
7. Make repair parts given in Table I.
8. Assemble the repair parts. See Detail I.
9. Drill the fastener holes.
10. Disassemble the repair parts.
11. Remove the nicks, scratches, gouges, burrs and sharp edges from the repair parts and the initial skins.
12. Apply a chemical conversion coating to the repair parts and to the cut edges of the initial skin. Refer to SRM 51-10-2.
13. Apply one layer of BMS 10-79, Type II or III primer to the repair parts and the cut edges of the skin. Refer to SOPM 20-44-04.
14. Install countersink repair washers in initial holes in the skin.
15. Install the repair parts with BMS 5-95 sealant between the mating surfaces. Refer to SRM 51-20-4 and 53-30-4.
16. Install the fasteners given in Table II.
17. Apply a fillet seal with BMS 5-95 sealant along the edges of the repair parts. Refer to SRM 51-20-4.
18. Apply the surface finish to the repair area. Refer to AMM 51-21.

NOTES

- THE BLIND RIVET REPAIR IS CATEGORY C. THE CATEGORY C REPAIR HAS FAA APPROVAL IF YOU DO THE INSPECTIONS AT THE SPECIFIED THRESHOLD AND INTERVALS, AND REPLACE THE REPAIR AT THE SPECIFIED TIME LIMIT, GIVEN IN TABLE III. [E]
- THIS REPAIR WILL HAVE AN EFFECT ON THE STRUCTURAL SIGNIFICANT ITEM (SSI):
  - NUMBER F-48; BUT, THE INTERNAL INSPECTION ALTERNATIVES FOR F-48A THROUGH F-48C ARE STILL APPLICABLE
  - NUMBER F-41 WHEN INSTALLED UNDER THE WING-TO-BODY AND LOWER LOBE FAIRINGS, BUT THE INTERNAL INSPECTION ALTERNATIVES ARE STILL APPLICABLE.

  THEREFORE, NO NEW INSPECTION ALTERNATIVES ARE NECESSARY FOR THIS REPAIR. DO THE INTERNAL INSPECTIONS FOR F-41 AND F-48, IF NECESSARY, AT THE SUBSEQUENT SUPPLEMENTAL STRUCTURAL INSPECTION DOCUMENT (SSID) INSPECTION ON THIS AIRPLANE. REFER TO SRM 51-00-4, FIGURE 3 FOR THE APPLICABLE SSI INFORMATION.
- THIS REPAIR MUST NOT BE USED UNLESS YOU CAN MAKE SURE THAT THE BLIND FASTENERS ARE PROPERLY SEATED ON THE INTERNAL STRUCTURE AND YOU CAN KEEP SUFFICIENT FASTENER SPACING AND EDGE MARGINS ON ALL INTERNAL AND EXTERNAL PARTS.

OBSOLETE JULY 10, 2003
DO NOT USE AFTER
SEE FIGURE 48 OR FIGURE 49

Fuselage Skin, Longitudinal Lap Splice -
External Repair with Blind Fasteners for Damaged Upper Skin
Figure 27 (Sheet 1)

BOEING PROPRIETARY - Copyright © - Unpublished Work - See title page for details.

NOTES (CONT)

- REFER TO THE FOLLOWING WHEN MAKING THIS REPAIR:
  - AMM 51-21 FOR INTERIOR AND EXTERIOR FINISHES
  - SOPM 20-44-04 FOR APPLICATION OF CORROSION RESISTANT PRIMER
  - SRM 51-00-6 FOR REPAIR CATEGORIES AND DEFINITIONS
  - SRM 51-10-1 FOR DAMAGE CLASSIFICATION
  - SRM 51-10-2 FOR PROTECTIVE TREATMENT OF METALS
  - SRM 51-20-4 FOR REPAIR SEALING
  - SRM 51-30 FOR FASTENER CODE, REMOVAL AND INSTALLATION, HOLE SIZES, EDGE MARGINS AND SUBSTITUTION
  - SRM 51-70 FOR AERODYNAMIC SMOOTHNESS
  - SRM 53-30-4 FOR SEALING OF FUSELAGE SKIN REPAIRS.

[A] USE THE SAME MATERIAL AND HEAT-TREAT, BUT ONE GAGE THICKER THAN THE UPPER SKIN. REFER TO SRM 51-20-1, FIGURE 2 FOR LIST OF AVAILABLE SHEET METAL GAGES.

[B] USE THE SAME MATERIAL, HEAT TREAT AND GAGE AS UPPER SKIN OF SPLICE.

[C] ADJUST THE LENGTH OF THE CUTOUT AS NECESSARY TO REMOVE ALL DAMAGED SKIN.

[D] USE INITIAL FASTENER LOCATIONS. ADJUST THE SHAPE OF THE REPAIR PART AS NECESSARY TO KEEP AN APPLICABLE EDGE MARGIN

[E] TO MAKE THIS CATEGORY C REPAIR A CATEGORY A OR B REPAIR, REPLACE NAS1398D6 WITH BACR15BB6D AND REPLACE NAS1398D8 WITH BACR15BB8D SOLID FASTENERS.

[F] EXCEPT FOR THE INITIAL FASTENER LOCATIONS WHERE THE FASTENER TYPE NAS1398D8 MUST BE INSTALLED. SEE DETAIL I.

[G] USE THE SAME SPACING AS THE INITIAL LAP SPLICE.

[H] USE THE SAME SPACING AS THE OUTER ROWS OF THE INITIAL LAP SPLICE.

FASTENER SYMBOLS

- REFERENCE FASTENER LOCATION
- INITIAL FASTENER LOCATION. SEE TABLE II FOR FASTENER TYPE
- REPAIR FASTENER LOCATION. SEE TABLE II FOR FASTENER TYPE
- INITIAL FASTENER LOCATION. REPLACE WITH NAS1398D8

REPAIR MATERIAL			
	PART	QTY	MATERIAL
[1]	STRUCTURAL FILLER	1	[B]
[2]	SPLICE PLATE	1	[A]

TABLE I

FASTENERS	
INITIAL FASTENER	INITIAL AND REPAIR FASTENER LOCATIONS
BACR15CE5D() BACR15CE6D()	NAS1398D6 [F] NAS1398D8

TABLE II

DO NOT USE AFTER JULY 10, 2003
SEE FIGURE 48 OR FIGURE 49
OBSOLETE

External Repair with Blind Fasteners for Damaged Upper Skin
Figure 27 (Sheet 2)

BOEING PROPRIETARY - Copyright © - Unpublished Work - See title page for details.

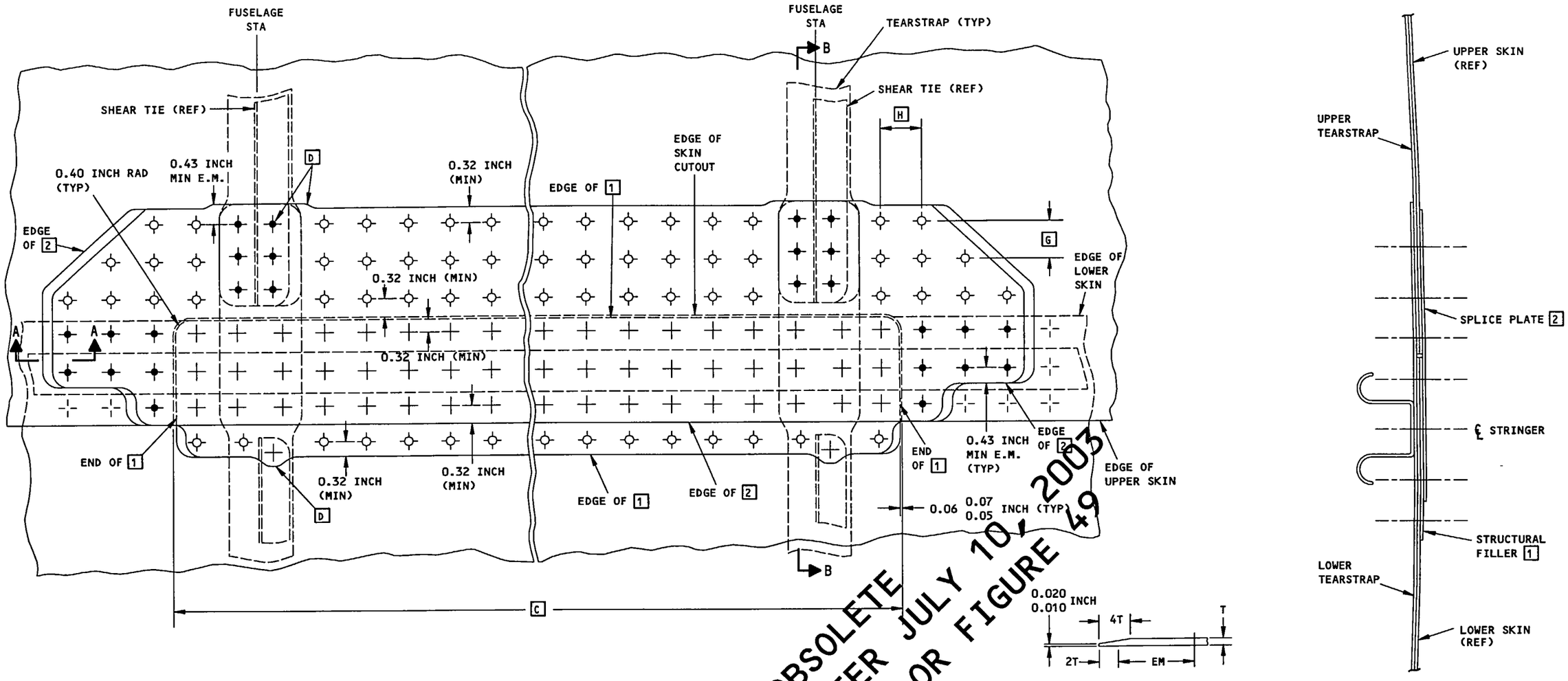

(TYPICAL FOR FORWARD AND AFT EDGES OF SPLICE PLATE SECTION A-A

SECTION B-B

NOTE: TYPICAL REPAIR IS SHOWN. ADJUST FOR VARIOUS LOCATIONS.

SUBSEQUENT INSPECTIONS AND TIME LIMIT ARE NECESSARY FOR A CATEGORY C REPAIR. SEE TABLE III.

OBSOLETE AFTER JULY 10, 2003
DO NOT USE
SEE FIGURE 48 OR FIGURE 49

DETAIL I
Fuselage Skin, Longitudinal Lap Splice -
External Repair with Blind Fasteners for Damaged Upper Skin
Figure 27 (Sheet 3)

BOEING PROPRIETARY - Copyright © - Unpublished Work - See title page for details.

CATEGORY C REPAIR INSPECTION REQUIREMENTS			
INSPECTION THRESHOLD	REPEAT INSPECTION		TIME LIMIT
	METHOD	INTERVAL	
3,000 CYCLES	GENERAL VISUAL	3,000 CYCLES	10,000 CYCLES E

Note: Inspect all fastener locations at the splice plate and structural filler for missing or loose fasteners. Refer to Detail II for the area where the external general visual inspection is necessary. Refer to Service Bulletin 737-53A1039 for additional inspection, repair and modification requirements of lap joints.

TABLE III

OBSOLETE AFTER JULY 10, 2003
DO NOT USE
SEE FIGURE 48 OR FIGURE 49

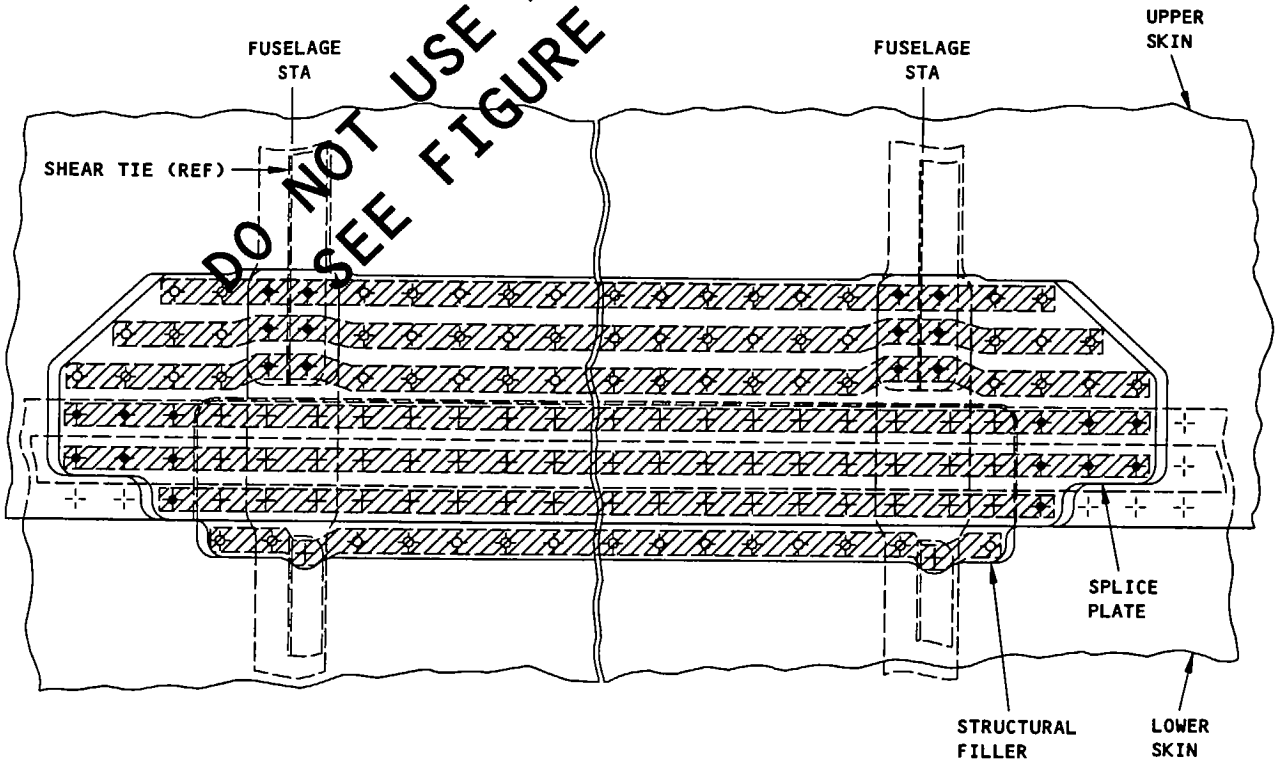

EXTERNAL GENERAL VISUAL INSPECTION AREA

DETAIL II
Fuselage Skin, Longitudinal Lap Splice -
External Repair with Blind Fasteners for Damaged Upper Skin
Figure 27 (Sheet 4)

BOEING PROPRIETARY - Copyright © - Unpublished Work - See title page for details.

REPAIR INSTRUCTIONS

1. Determine the extent of the repair.

2. Remove the fasteners from the skin butt joint as necessary.

3. Insert a stainless steel sheet metal guard approximately 0.032 thick between the splice strap (or frame where applicable) and damaged skin/doubler to protect the underlying structure.

4. Cut out the damaged portion of the skin and doubler to form an opening as shown. Radius corners to 0.50.

5. Return all indented or projecting skin to contour.

6. Make part 2 filler (Table I) to match skin and doubler cutout. Gap to be 0.07 maximum and 0.05 minimum.

7. Make the remaining repair part 1 (Table I) for the external doubler.

8. Assemble the repair parts and drill to suit existing and repair fasteners.

9. Break sharp edges of original and repair parts 0.015R to 0.030R.

10. Remove all nicks, scratches, burrs, sharp edges and corners from original and repair parts.

11. Apply a protective alodine coating to the repair parts and the cut edges of the original parts per 51-10-02.

12. Apply one coat of BMS 10-11, Type 1 primer to repair parts and the cut edges of the original parts per 51-21 of the 737 Maintenance Manual.

13. Install countersink repair washers where repair plate covers existing countersunk holes per 51-30-8.

14. Install the repair parts making a faying surface seal per 51-20-4 using BMS 5-95 sealant.

15. Restore original finish per 51-21 of the 737 Maintenance Manual.

DO NOT USE AFTER JULY 10, 2003
OBSOLETE
SEE FIGURE 48 OR FIGURE 49

Fuselage Skin Butt Joint External Repair
Figure 28 (Sheet 1)

BOEING PROPRIETARY - Copyright © - Unpublished Work - See title page for details.

NOTES

- THIS IS AN EXTERNAL REPAIR FOR DAMAGE TO A SKIN BUTT JOINT. DAMAGE IS ASSUMED TO BE TO SKIN AND BONDED DOULBER ONLY
- THIS REPAIR IS SHOWN FOR FUSELAGE SKIN BUTT JOINTS AT BODY STATIONS 360, 540, AND 1016, AND IS ALSO APPLICABLE TO BODY STATIONS 727 AND 908 OR WHERE SIMILAR SKIN BUTT JOINT CONFIGURATIONS ARE PRESENT
- THIS REPAIR IS SHOWN FOR DAMAGE FORWARD AND AFT OF A SKIN BUTT JOINT. IF DAMAGE IS ONLY FORWARD OR AFT OF A SKIN BUTT JOINT THEN ONE FILLER AND ONE PLATE IS REQUIRED.
- REFER TO THE FOLLOWING WHEN USING THIS REPAIR:

  51-10-1 FOR INVESTIGATION AND CLEANUP OF DAMAGE

  51-10-2 FOR PROTECTIVE TREATMENT OF METAL

  51-21 OF THE 737 MAINTENANCE MANUAL FOR INTERIOR AND EXTERIOR FINISHES

  51-30 FOR FASTENER CODE, REMOVAL, INSTALLATION, HOLE SIZES AND EDGE MARGINS

  51-30-8 FOR COUNTERSINK REPAIR WASHERS

  51-31 OF THE 737 MAINTENANCE MANUAL FOR SEALS AND SEALING

  51-70 FOR AERODYNAMIC SMOOTHNESS REQUIREMENTS

[A] ONE GAGE GREATER THAN SKIN PLUS DOUBLER

[B] SAME GAGE AS SKIN PLUS DOUBLER

[C] USE SAME FASTENER SPACING AS EXISTING FASTENER SPACING AT SKIN BUTT JOINT

[D] CONFIGURATION SHOWN FOR EARLIER AIRPLANES

[E] CONFIGURATION SHOWN FOR LATER AIRPLANES

[F] FASTENER EDGE MARGIN

SYMBOLS

+ ORIGINAL FASTENER LOCATION. INSTALL SAME SIZE AND TYPE OF FASTENER, OR ACCEPTABLE SUBSTITUTIONS PER 51-30-3

✦ REPAIR FASTENER LOCATION. INSTALL THE FASTENER SPECIFIED IN TABLE XI.

OBSOLETE AFTER JULY 10, 2003
DO NOT USE
SEE FIGURE 48 OR FIGURE 49

Fuselage Skin Butt Joint External Repair
Figure 28 (Sheet 2)

BOEING PROPRIETARY - Copyright © - Unpublished Work - See title page for details.

REPAIR MATERIAL			
PART		QTY	MATERIAL
1	PLATE	2	CLAD 2024-T3 [A]
2	FILLER	2	CLAD 2024-T3 [B]

TABLE I

REPAIR FASTENER				
ORIGINAL SKIN GAGE	FASTENER		SPACING	EDGE MARGIN
	PREFERRED	ALTERNATE		
.036-.080	BACR15CH6D	BACR15BB6D	[C]	0.42

TABLE II

OBSOLETE AFTER JULY 10, 2003
DO NOT USE FIGURE 48 OR FIGURE 49
SEE FIGURE

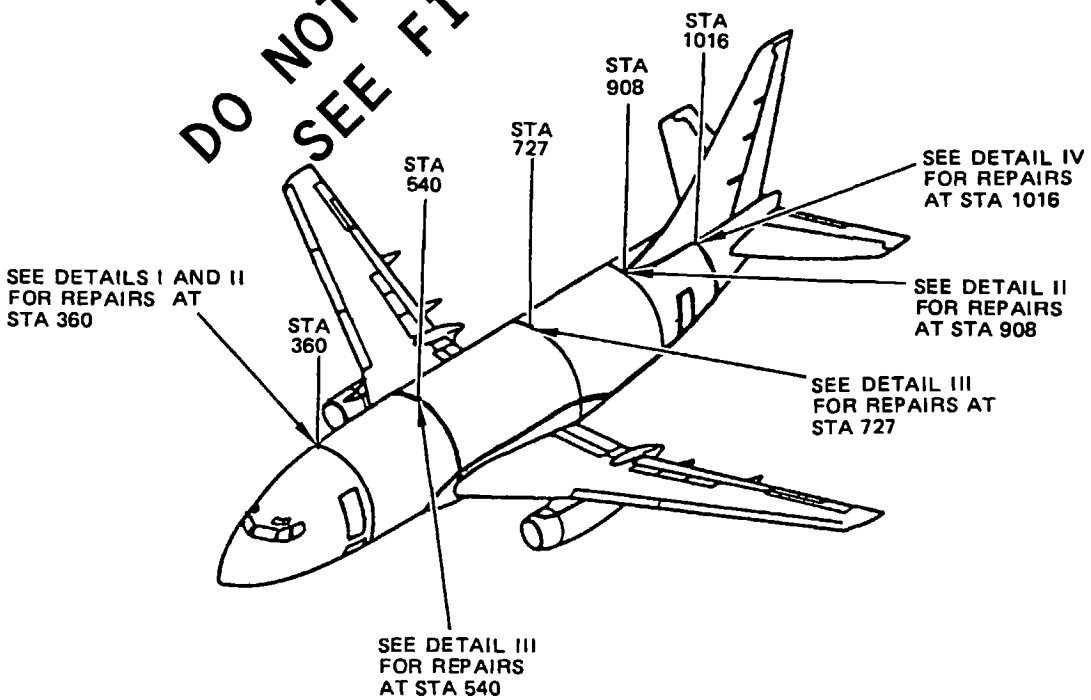

Fuselage Skin Butt Joint External Repair
Figure 28 (Sheet 3)

BOEING PROPRIETARY - Copyright © - Unpublished Work - See title page for details.

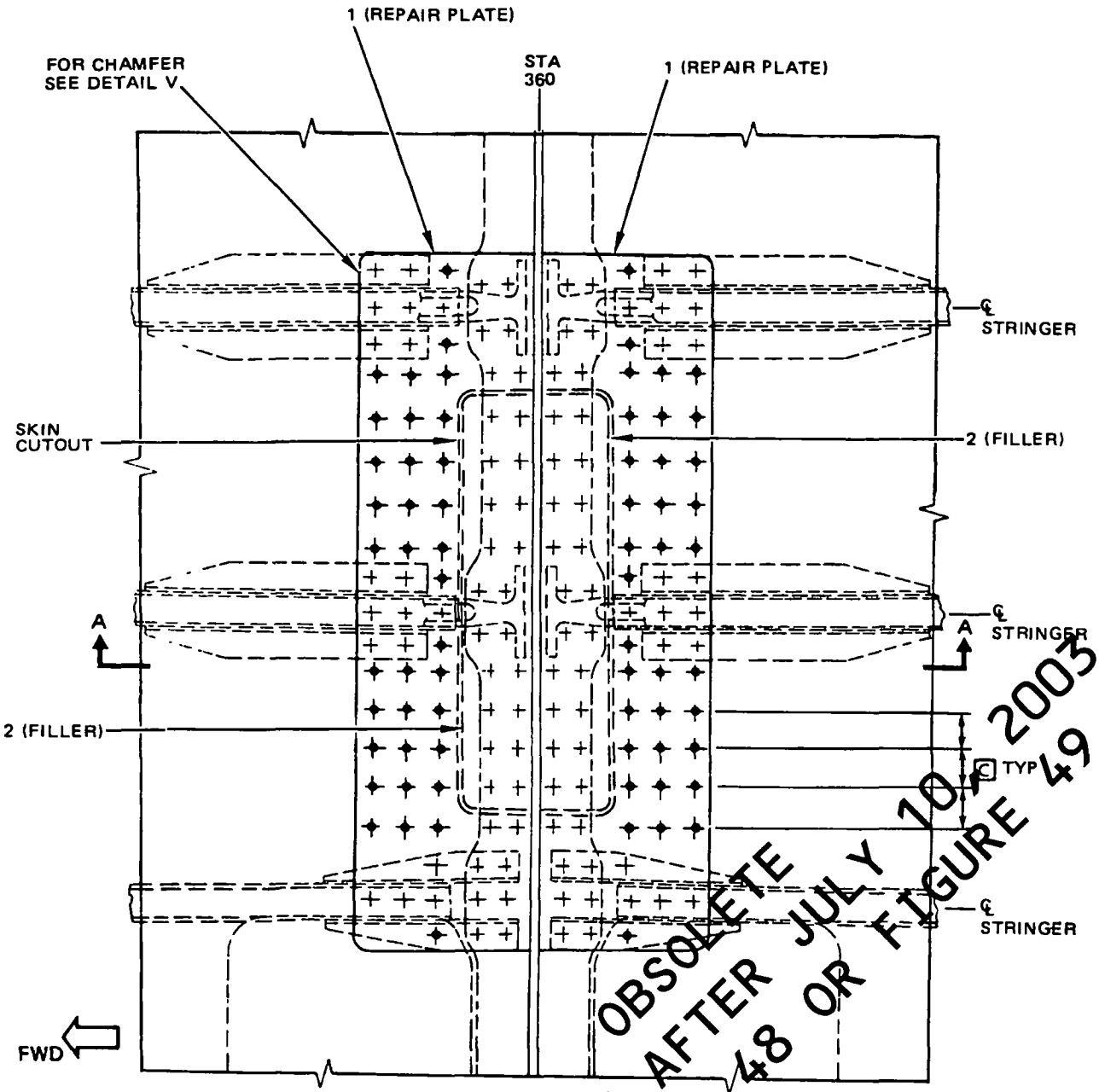

REPAIR AT BODY STA 360
DETAIL I

DO NOT USE AFTER JULY 10, 2003
OBSOLETE
SEE FIGURE 48 OR FIGURE 49

Fuselage Skin Butt Joint External Repair
Figure 28 (Sheet 4)

BOEING PROPRIETARY - Copyright © - Unpublished Work - See title page for details.

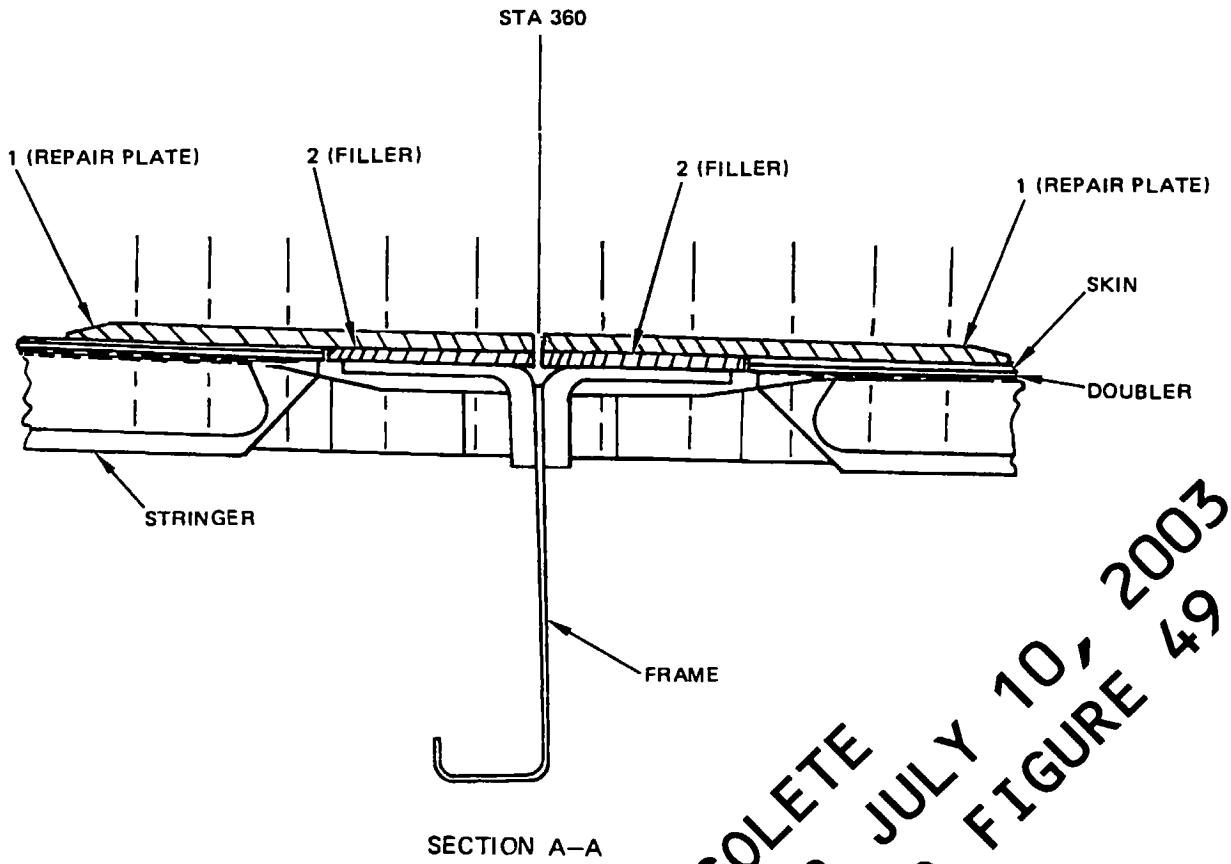

OBSOLETE
DO NOT USE AFTER JULY 10, 2003
SEE FIGURE 48 OR FIGURE 49

Fuselage Skin Butt Joint External Repair
Figure 28 (Sheet 5)

BOEING PROPRIETARY - Copyright © - Unpublished Work - See title page for details.

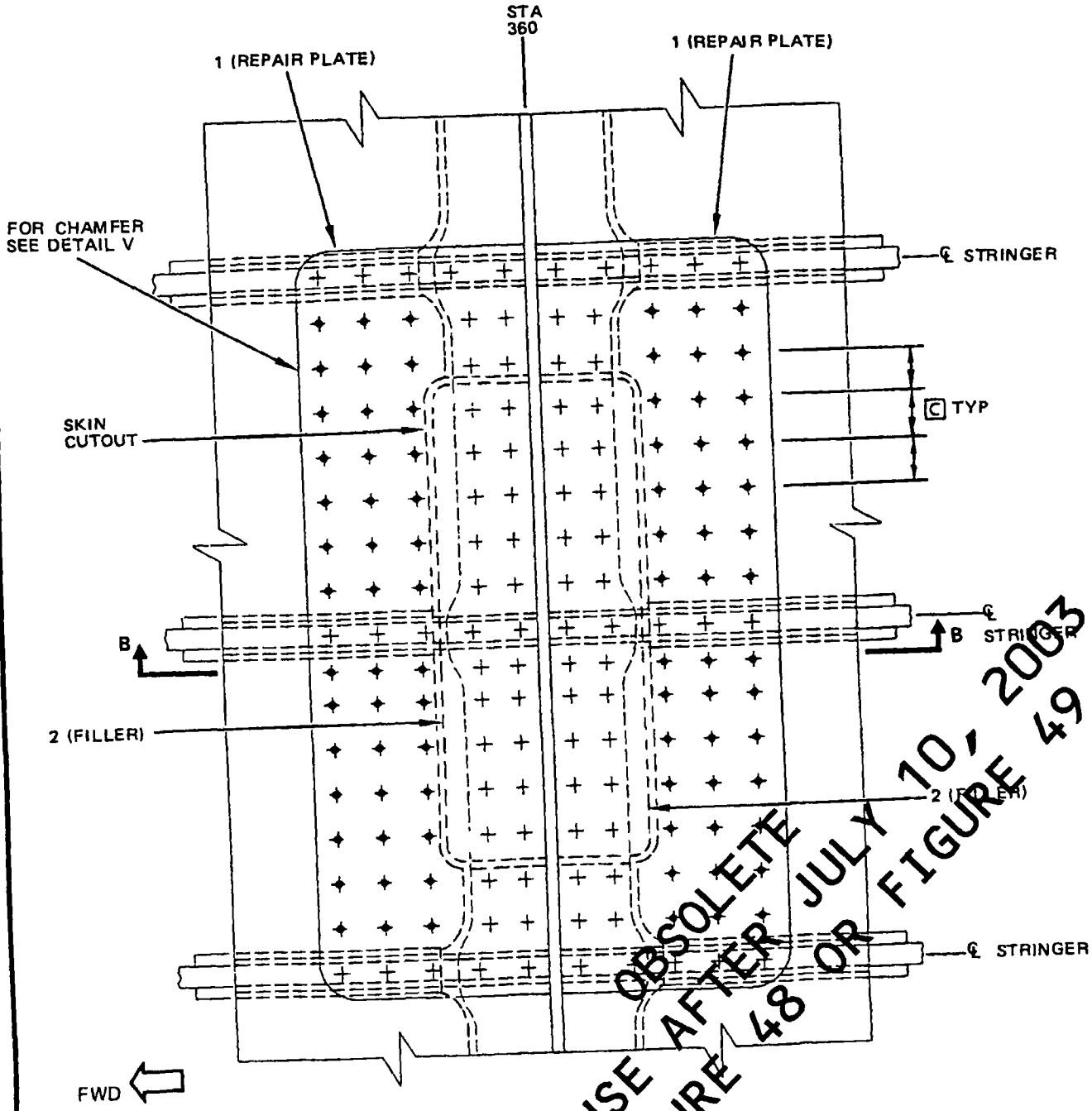

REPAIR AT BODY STA 360
(REPAIR AT BODY STA 908 SIMILAR)
DETAIL II E

DO NOT USE AFTER JULY 10, 2003
OBSOLETE
SEE FIGURE 48 OR FIGURE 49

Fuselage Skin Butt Joint External Repair
Figure 28 (Sheet 6)

BOEING PROPRIETARY - Copyright © - Unpublished Work - See title page for details.

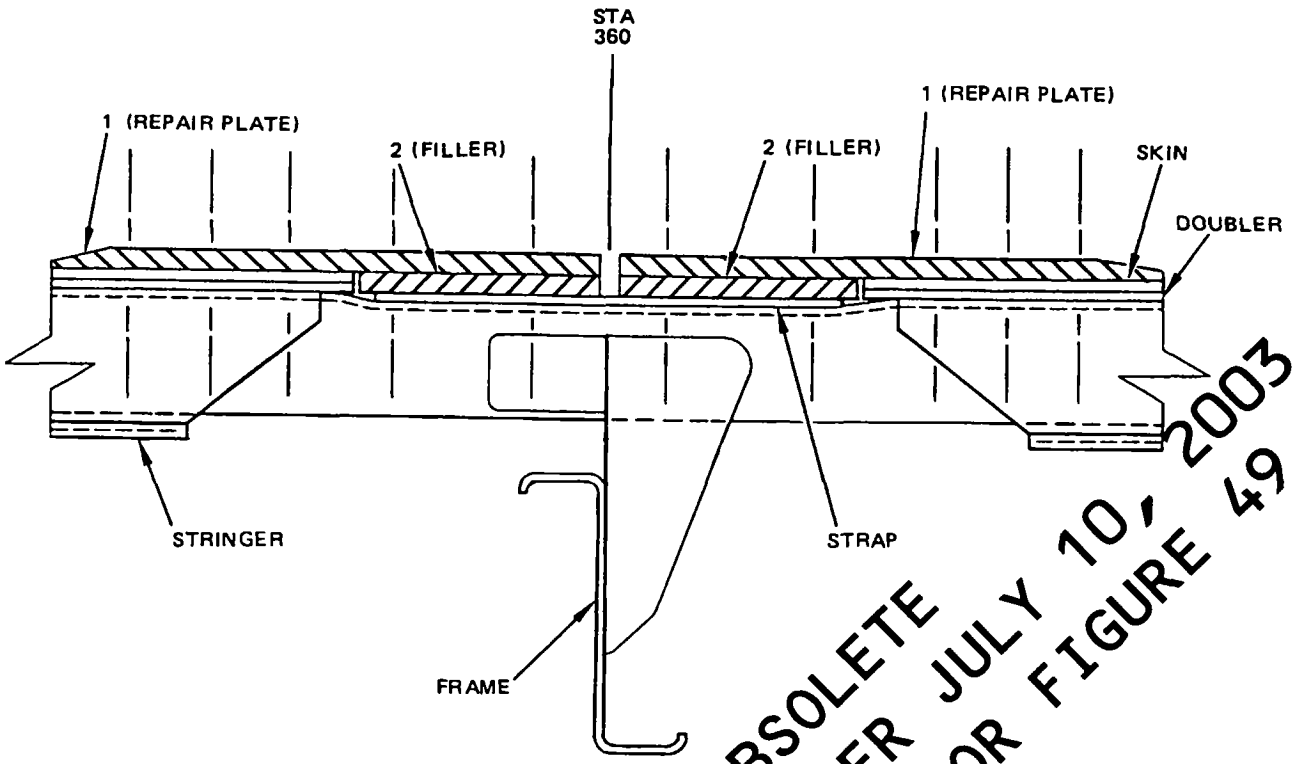

SECTION B–B

DO NOT USE AFTER JULY 10, 2003
SEE FIGURE 48 OR FIGURE 49

Fuselage Skin Butt Joint External Repair
Figure 28 (Sheet 7)

BOEING PROPRIETARY – Copyright © – Unpublished Work – See title page for details.

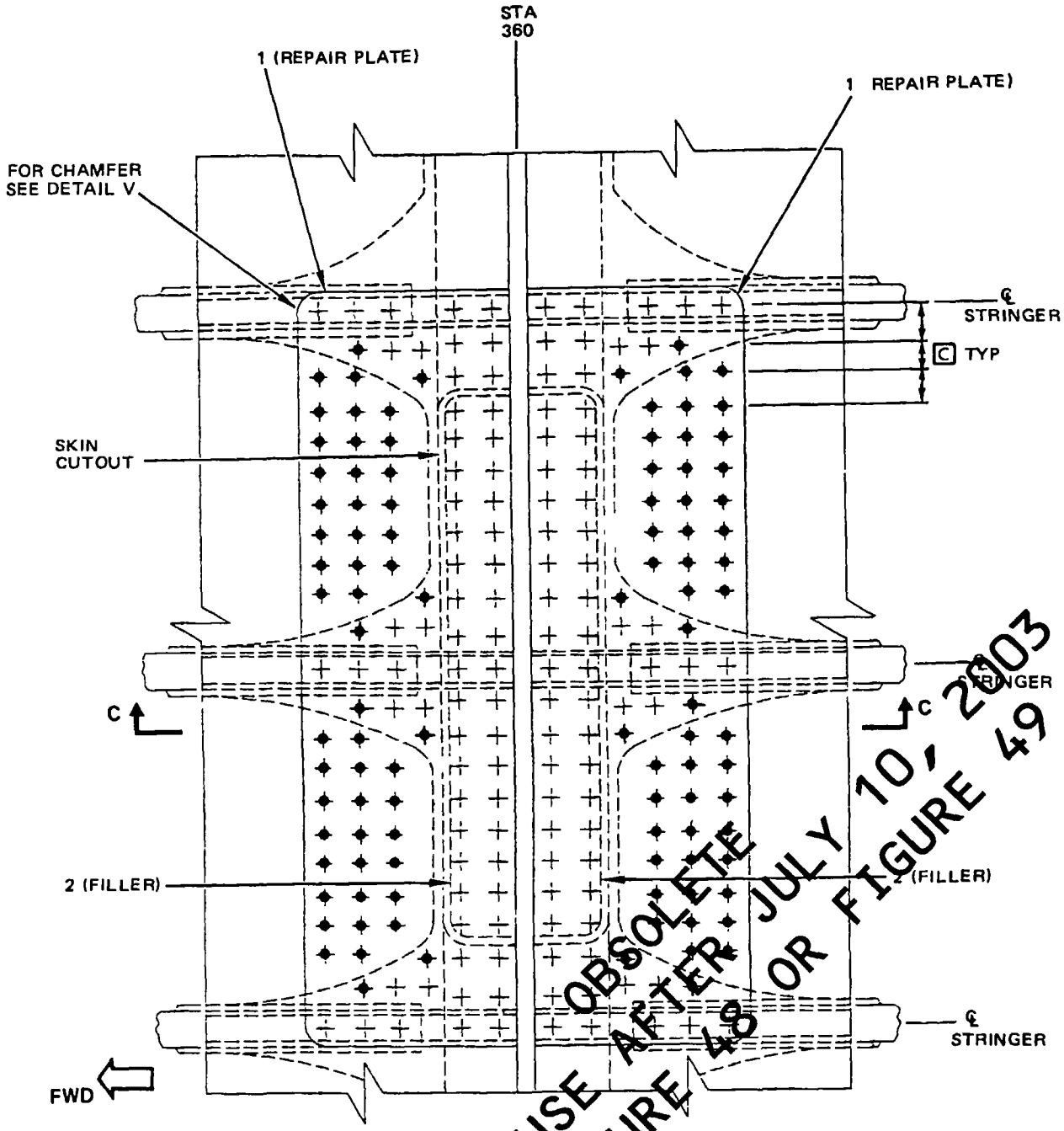

REPAIR AT BODY STATION 540
(REPAIR AT BODY STATION 727 SIMILAR)

DETAIL III

DO NOT USE OBSOLETE AFTER JULY 10, 2003
SEE FIGURE 48 OR FIGURE 49

Fuselage Skin Butt Joint External Repair
Figure 28 (Sheet 8)

BOEING PROPRIETARY - Copyright © - Unpublished Work - See title page for details.

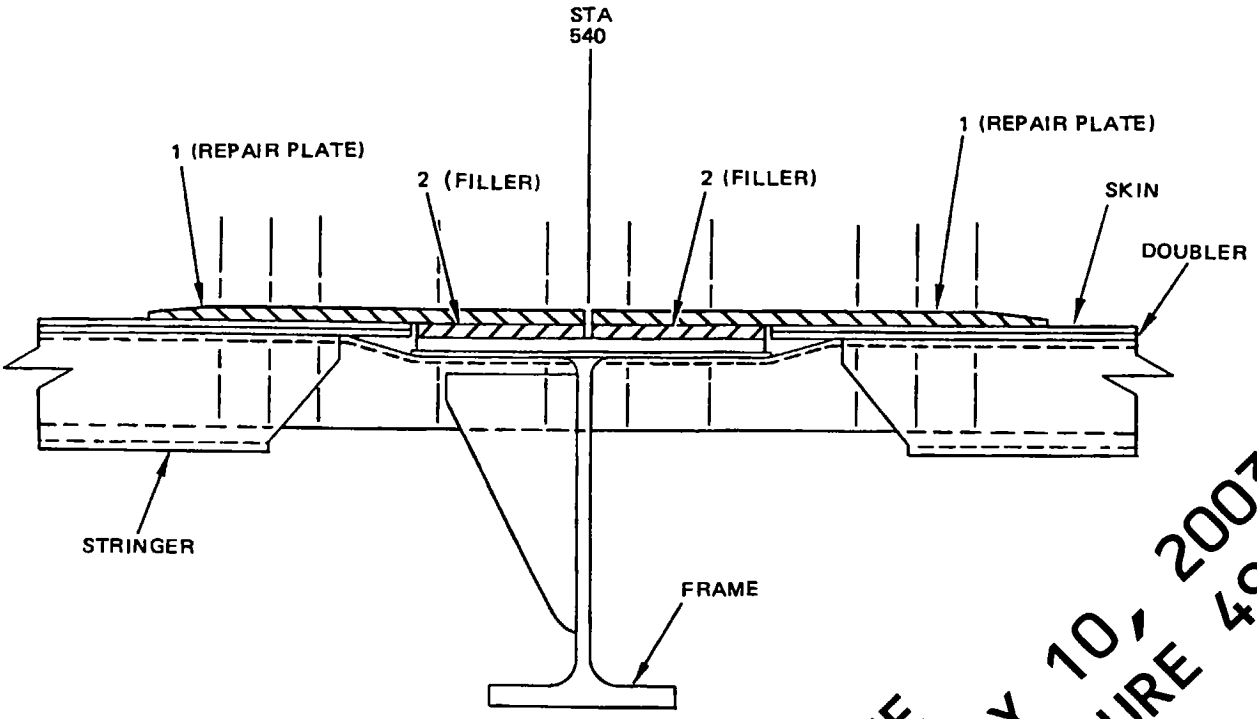

SECTION C–C

DO NOT USE AFTER JULY 10, 2003
SEE FIGURE 48 OR FIGURE 49

Fuselage Skin Butt Joint External Repair
Figure 28 (Sheet 9)

BOEING PROPRIETARY - Copyright © - Unpublished Work - See title page for details.

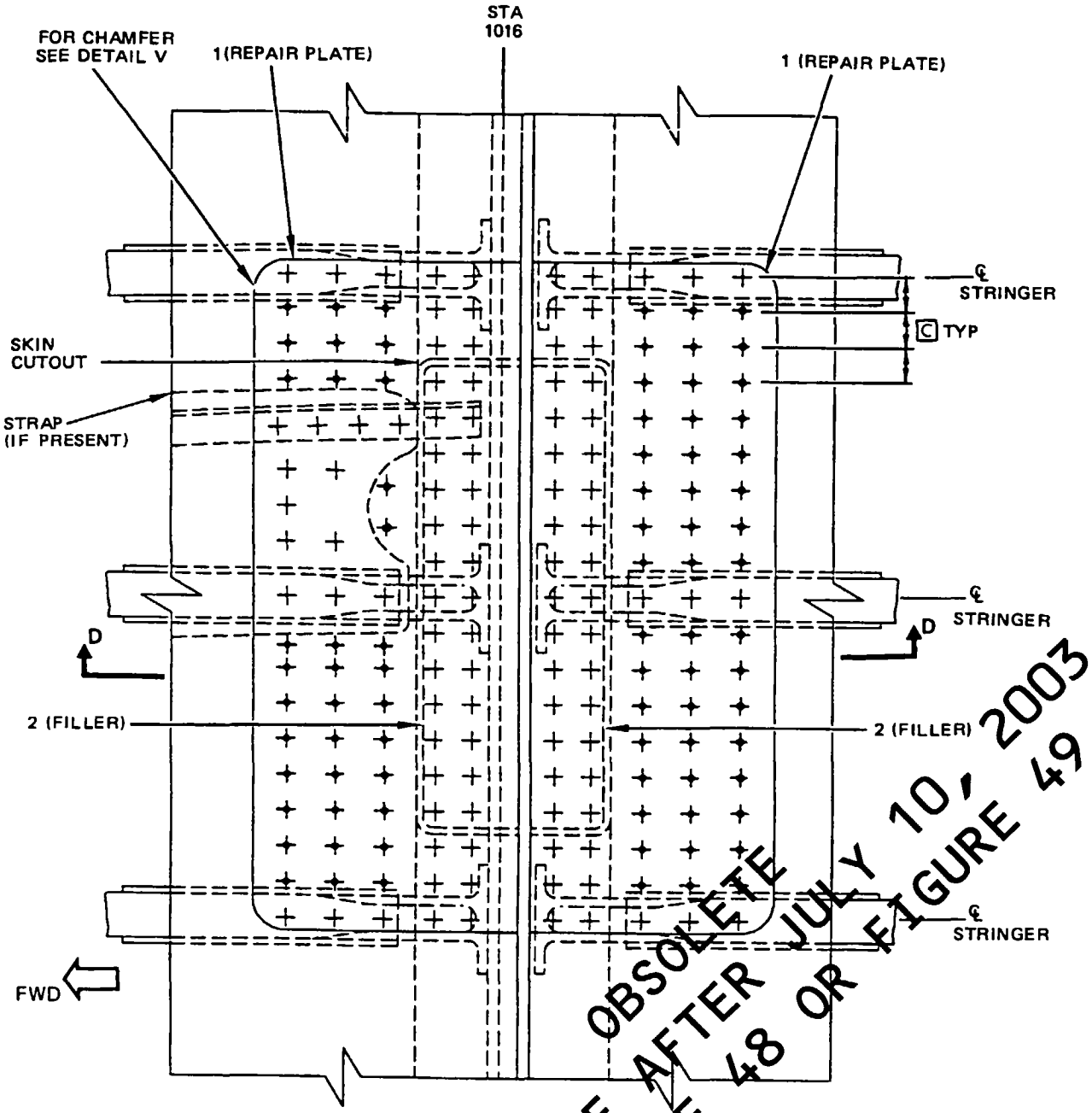

REPAIR AT BODY STATION 1016
DETAIL IV

DO NOT USE AFTER JULY 10, 2003
OBSOLETE
SEE FIGURE 48 OR FIGURE 49

Fuselage Skin Butt Joint External Repair
Figure 28 (Sheet 10)

BOEING PROPRIETARY - Copyright © - Unpublished Work - See title page for details.

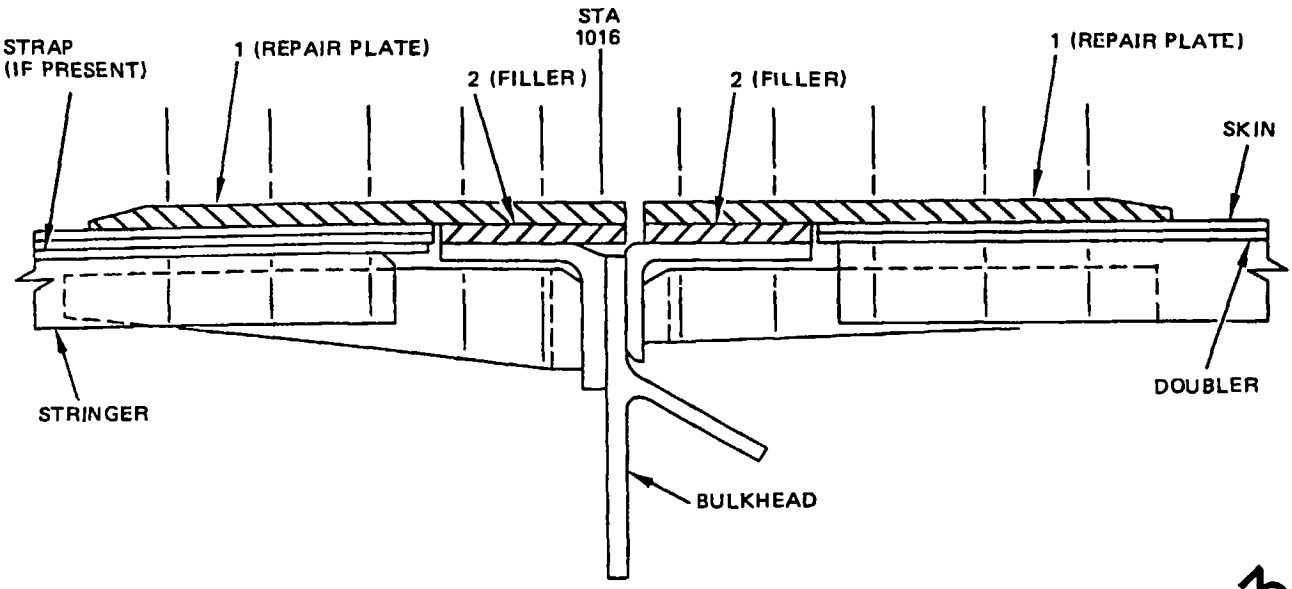

SECTION D–D

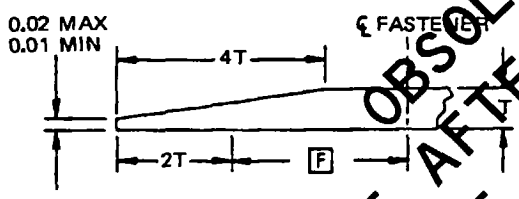

DETAIL F

OBSOLETE
DO NOT USE AFTER JULY 10, 2003
SEE FIGURE 48 OR FIGURE 49

Fuselage Skin Butt Joint External Repair
Figure 28 (Sheet 11)

BOEING PROPRIETARY - Copyright © - Unpublished Work - See title page for details.

REPAIR INSTRUCTIONS

1. Remove all of the fasteners in the rain gutter.
2. Remove the rain gutter.
3. Remove the sealant and clean the fuselage skin in the repair area.
4. Make a new rain gutter.
5. Drill the fastener holes approximately as shown in Detail I and II.
6. Plug all fastener holes in the repair area that are not used for the installation of the rain gutter.
7. Apply a chemical conversion coating to the cut edges of the rain gutter and the fuselage skin. Refer to SRM 51-10-2.
8. Apply one coat of BMS 10-79, Type II primer to the cut edges of the rain gutter and the fuselage skin.
9. Install the repair parts. Refer to Detail I for the Forward Entry Door and Detail II for the Forward Galley Door.
10. If there are door corner repairs in the rain gutter area, put fillers between the rain gutter and the skin.
11. Install a new rain gutter with BMS 5-95 sealant between the mating surfaces. Install the fasteners wet with BMS 5-95 sealant.

    NOTE: It is not necessary to cure the sealant before you use the airplane.

NOTES

- THIS REPAIR COULD HAVE AN EFFECT ON A STRUCTURALLY SIGNIFICANT ITEM (SSI) GIVEN IN SRM 51-00-4, FIG. 3. BUT, NO CHANGE TO THE SUPPLEMENTAL STRUCTURAL INSPECTION DOCUMENT (SSID) INSPECTION PROGRAM IS NECESSARY.
- D = THE FASTENER DIAMETER
- WHEN YOU USE THIS REPAIR REFER TO:
  - AMM 51-21 FOR INTERIOR AND EXTERIOR FINISHES
  - SRM 51-10-2 FOR PROTECTIVE TREATMENT OF METAL
  - SRM 51-20-4 FOR SEALING OF REPAIRS
  - SRM 51-30 FOR FASTENER CODE, REMOVAL, INSTALLATION, HOLE SIZES AND EDGE MARGINS.

[A] FOR ALL 737-200 AIRPLANES WITH CUM LINE NUMBERS: 969 THRU 1585

[B] CHANGE THE FASTENER LOCATION, IF NECESSARY, TO KEEP:

- A 4D MINIMUM SPACE BETWEEN FASTENERS
- A 2D MINIMUM EDGE MARGIN BETWEEN THE NEW FASTENER AND THE EDGES OF ALL INITIAL PARTS.

FASTENER SYMBOLS

INITIAL FASTENER LOCATION. INSTALL AN MS20470D5 RIVET.

REPAIR FASTENER LOCATION. INSTALL A BACR15BB5D RIVET.

REPAIR MATERIAL			
PART		QTY	MATERIAL
1	RAIN GUTTER	1	BAC1496-356 X 48.00 INCHES LONG, CLAD 2024-T3
2	SIDE RAIN GUTTER [A]	1	BAC1496-356 X 12.10 INCHES LONG, CLAD 2024-T3
3	RAIN GUTTER	1	BAC1496-356 X 41.50 INCHES LONG, CLAD 2024-T3
4	SIDE RAIN GUTTER	1	BAC1496-356 X 11.10 INCHES LONG, CLAD 2024-T3

TABLE I

Fuselage Skin - Rain Gutter Repair at the Forward Entry/Forward Galley Doors
Figure 29 (Sheet 1)

BOEING PROPRIETARY - Copyright © - Unpublished Work - See title page for details.

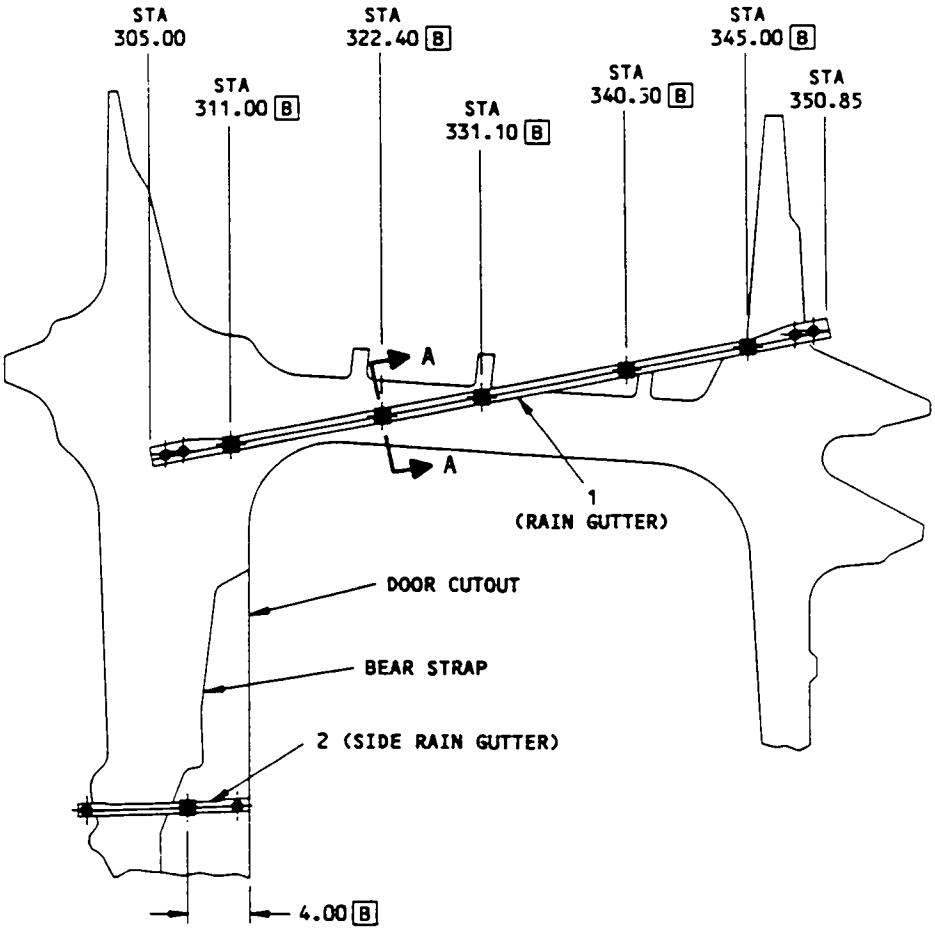

FORWARD ENTRY DOOR
DETAIL I

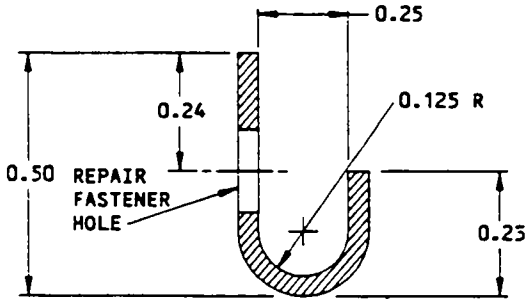

RAIN GUTTER SHOWN ONLY
SECTION A-A

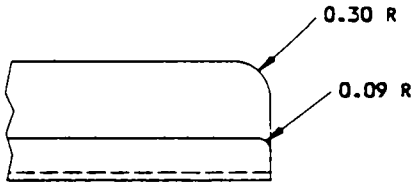

END DETAIL OF
RAIN GUTTER

Fuselage Skin - Rain Gutter Repair
at the Forward Entry/Forward Galley Doors
Figure 29 (Sheet 2)

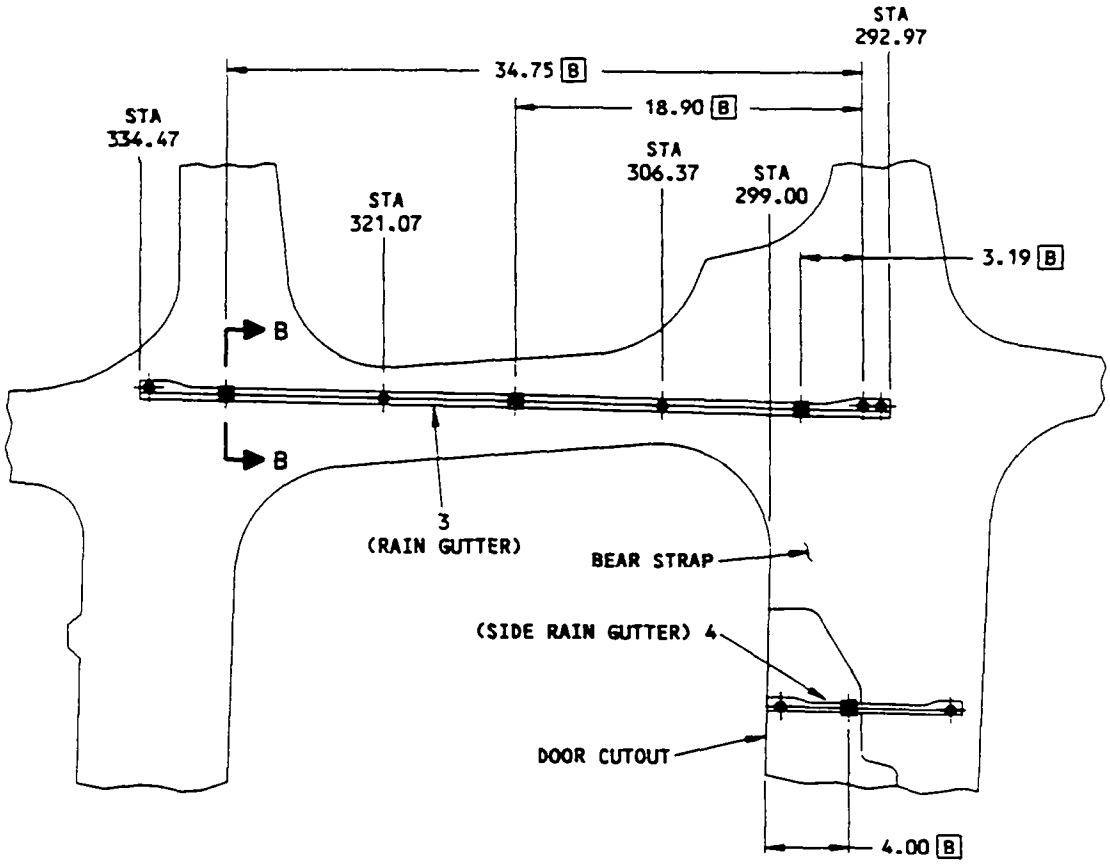

FORWARD GALLEY DOOR
DETAIL II

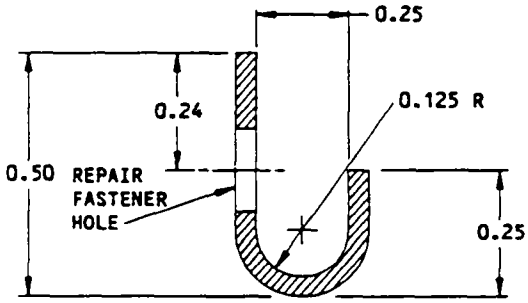

RAIN GUTTER SHOWN ONLY
SECTION B-B

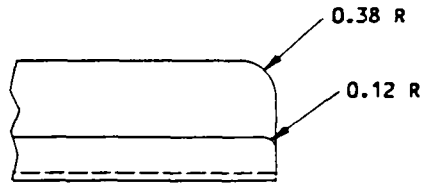

END DETAIL OF
RAIN GUTTER

Fuselage Skin - Rain Gutter Repair
at the Forward Entry/Forward Galley Doors
Figure 29 (Sheet 3)

REPAIR INSTRUCTIONS

1. Remove the fasteners that attach the vertical rubstrip seal to the skin at BS 1138 between stringers S-5A and S-12.

CAUTION: BE CAREFUL WHEN YOU CUT OUT THE DAMAGED PART OF THE SKIN. DO NOT CAUSE DAMAGE TO THE SKIN ADJACENT TO THE REPAIR AREA.

2. Cut out the damaged part of the skin. Make a radius of 0.50 inch at the corner of the cutout. See Detail I.
3. Make an inspection of the cut edge of the skin for cracks. Use the high frequency eddy current procedure. Refer to Part 6, 51-00-00 of the Nondestructive Test Manual, D6-37239.
   (a) If you find no cracks, cut out 0.04 inch or more of the skin to remove the fatigue damaged material.
   (b) If you find cracks:
      - Cut out the damaged part of the skin
      - Use the high frequency eddy current procedure to inspect the cut edge of the skin for cracks.
      - If you find no cracks, cut out 0.04 inch or more of the skin to remove fatigue damaged material.
4. Make the repair parts. Make the filler to the same shape as the skin cutout. See Table I.
5. Assemble the repair parts with the vertical rubstrip seal and drill the fastener holes. See Detail I.
6. Disassemble the repair parts.
7. Remove the nicks, scratches, gouges, burrs and sharp edges from the repair parts and the skin.
8. Apply a chemical conversion coating to the repair parts and to the repair surfaces of the skin. Refer to 51-10-2.
9. Apply one layer of BMS 10-79, Type II primer to the repair parts and to the repair surfaces of the skin. Refer to 51-20 of the Maintenance Manual.
10. Install the repair parts and the vertical rubstrip seal with BMS 5-95 sealant between the faying surfaces.
11. Install the fasteners and the countersink repair washers where necessary.

NOTES

- THIS REPAIR WILL NOT HAVE AN EFFECT ON THE STRUCTURAL SIGNIFICANT ITEMS (SSI) GIVEN IN SRM 51-00-4, FIGURE 3.
- WHEN YOU USE THIS REPAIR REFER TO:
  - SRM 51-10-1 FOR DAMAGE CLASSIFICATION
  - SRM 51-10-2 FOR PROTECTIVE TREATMENT OF METAL
  - SRM 51-20-4 FOR REPAIR SEALING
  - SRM 51-30 FOR FASTENER CODE, REMOVAL AND INSTALLATION, HOLE SIZES AND EDGE MARGINS
  - SRM 51-20 FOR INTERIOR AND EXTERIOR FINISHES
- MACHINED SURFACES MUST HAVE A FINISH OF 125 MICROINCHES R_a OR BETTER.

[A] INSTALL THE TAPERED SHIM TO FILL THE DISTANCE BETWEEN THE VERTICAL RUBSTRIP SEAL AND THE INITIAL SKIN. THE MAXIMUM DISTANCE BETWEEN THE RUBSTRIP SEAL AND THE INITIAL SKIN IS 0.01 INCH BEFORE FASTENER LOCATION. CUT THE TAPERED SHIM TO THE SAME SHAPE AS THE RUBSTRIP SEAL.

FASTENER SYMBOLS

REFERENCE FASTENER LOCATION.

INITIAL FASTENER LOCATION. INSTALL A BACR15CE5D RIVET WITH A COUNTERSINK REPAIR WASHER BETWEEN THE SKIN AND THE DOUBLER.

REPAIR FASTENER LOCATION. INSTALL A BACR15CE5D RIVET.

REPAIR MATERIAL			
PART		QTY	MATERIAL
1	DOUBLER	1	0.063 2024-T3
2	FILLER	1	0.056 2024-T3
3	TAPER SHIM	1	2024-T3 [A]

TABLE I

Skin Repair - BS 1138 and Stringer S-12
Figure 30 (Sheet 1)

BOEING PROPRIETARY - Copyright © - Unpublished Work - See title page for details.

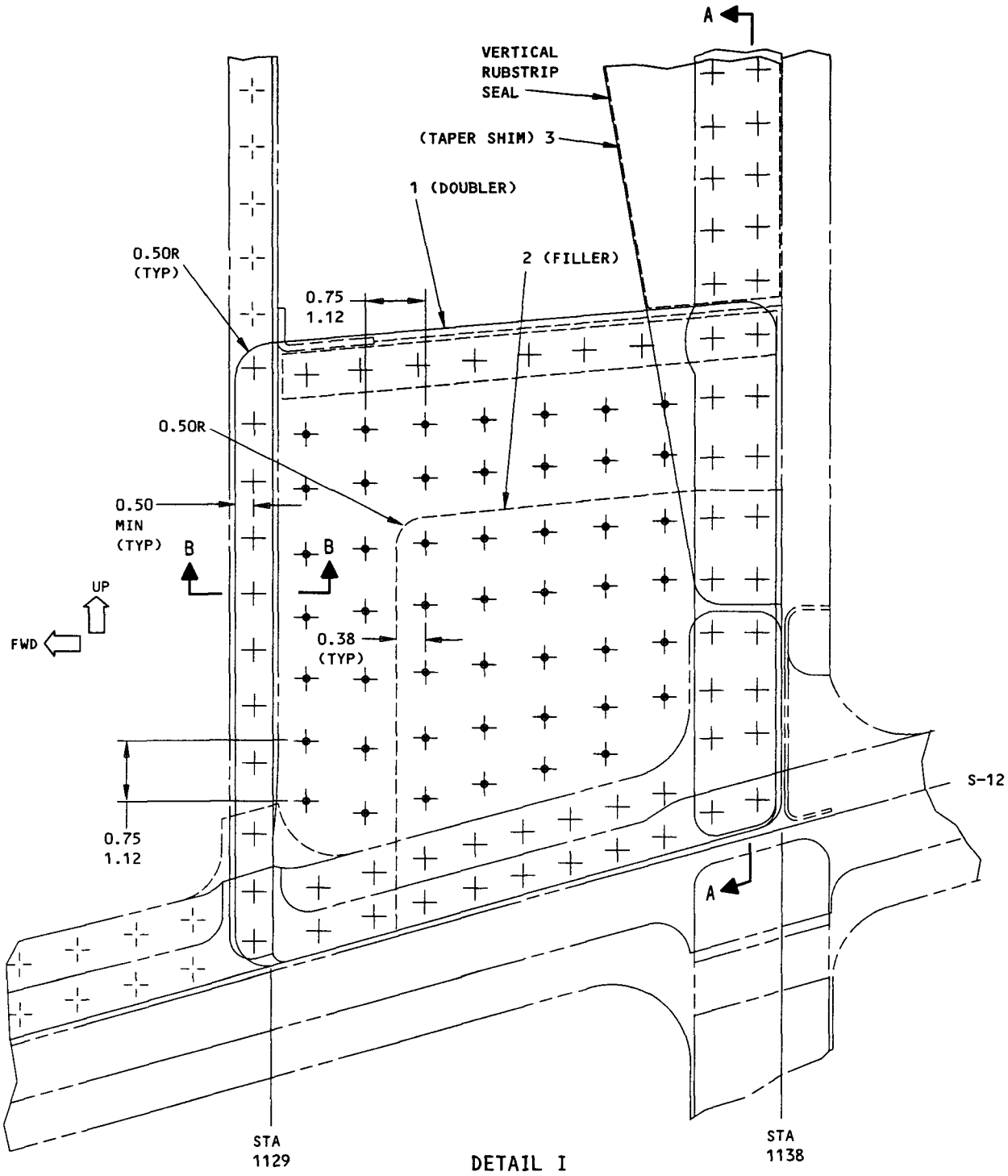

DETAIL I

LEFT SIDE IS SHOWN,
RIGHT SIDE IS EQUIVALENT

Skin Repair - BS 1138 and Stringer S-12
Figure 30 (Sheet 2)

BOEING PROPRIETARY - Copyright © - Unpublished Work - See title page for details.

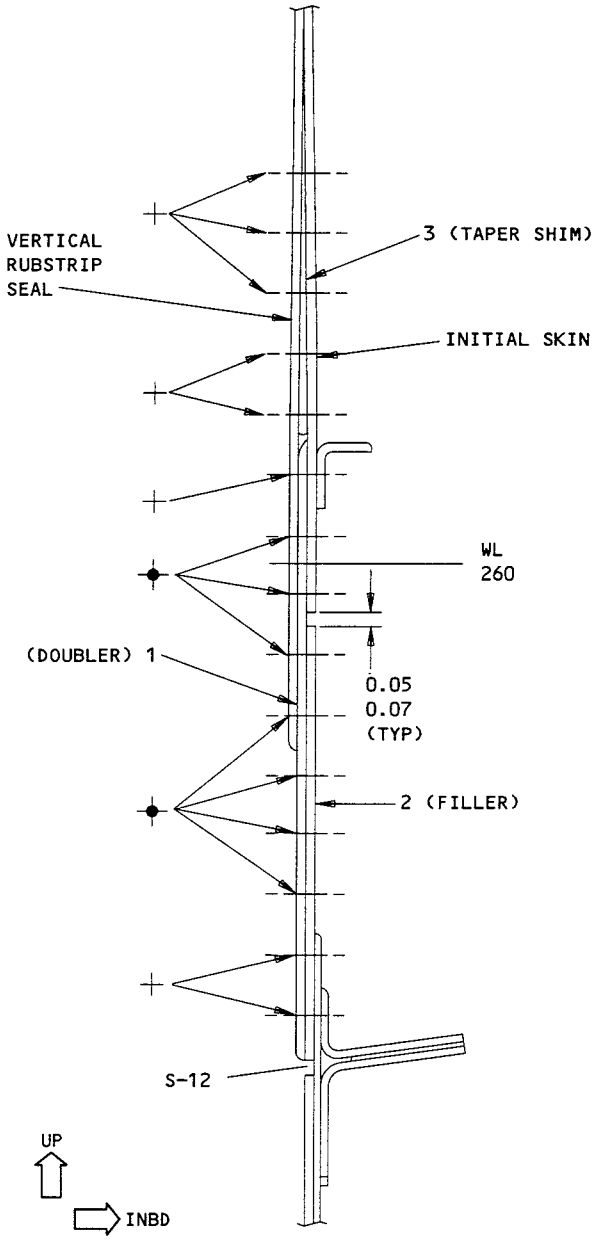

SECTION A-A

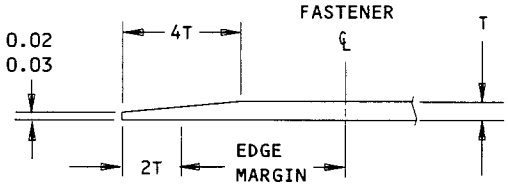

SECTION B-B
(TYP ALL EDGES)

Skin Repair - BS 1138 and Stringer S-12
Figure 30 (Sheet 3)

BOEING PROPRIETARY - Copyright © - Unpublished Work - See title page for details.

APPLICABILITY

THIS REPAIR APPLIES TO CRACKS IN THE AREA OF THE CUTOUT IN THE SKIN AND THE BONDED DOUBLER. TELL BOEING:

- IF A CRACK IS NOT IN THE AREA OF THE CUTOUT AS SHOWN IN DETAIL II AND DETAIL IV
- IF THERE IS DELAMINATION BETWEEN THE SKIN AND THE BONDED DOUBLER
- IF THE BEAR STRAP IS CRACKED.

REPAIR INSTRUCTIONS

1. Remove the fasteners from the repair area.
2. Move the damaged skin and the doubler apart from the bear strap.
3. Cut out the damaged skin and the doubler. See Detail II [B] or Detail IV [C].
4. Do a High Frequency Eddy Current (HFEC) inspection on the cutout area to make sure there are no cracks. If there are no cracks, make thecutout larger by 0.04 inch. Refer to SRM 51-10-1 and NDT Part 6, 53-10-39.
5. Make the repair parts. See Table I.
6. Assemble the repair parts and drill the fastener holes. See Detail I [B] or Detail III [C].
7. Disassemble the repair parts.
8. Remove the nicks, scratches, gouges, burrs, and sharp edges from the skin and the repair parts.
9. Apply a chemical conversion coating to the bare surfaces of the skin, and to the bonded doubler and the filler. Refer to SRM 51-10-2.
10. Apply cadmium plating to the cres repair doubler. Refer to SRM 51-10-2.
11. Apply two layers of BMS 10-79, Type II primer to the doubler. Apply one layer of BMS 10-79, Type II primer to the filler. Apply one layer of BMS 10-79, Type II primer to the bare surfaces of the skin. Refer to SOPM 20-44-04.
12. Install repair washers in the countersunk holes in the skin panel. Refer to SRM 51-30-8.
13. Install the repair parts with BMS 5-95 sealant between the faying surfaces. Install the non-aluminum fasteners wet with BMS 5-95 sealant in close reamed holes.
14. Apply the finish to the repair area. Refer to AMM 51-21.

NOTES

- THESE REPAIRS (DETAIL I AND III) ARE CATEGORY B REPAIRS. THE CATEGORY B REPAIR HAS FAA APPROVAL IF YOU DO THE SUPPLEMENTAL INSPECTIONS GIVEN IN TABLE II. INCORPORATION OF THESE INSPECTION REQUIREMENTS INTO THE AIRPLANE'S MAINTENANCE PROGRAM SATISFIES THE DAMAGE TOLERANCE ASSESSMENT OF THE REPAIR SPECIFIED BY THE REPAIR ASSESSMENT PROGRAM. THIS ASSESSMENT CAN BE DONE AFTER YOU RELEASE THE AIRPLANE TO SERVICE. REFER TO SRM 51-00-6 FOR GENERAL DATA ABOUT THE REPAIR ASSESSMENT PROGRAM. REFER TO DETAIL V OR VI AS APPLICABLE FOR THE INSPECTION AREA.
- THESE REPAIRS (DETAIL I AND III) WILL HAVE AN EFFECT ON THE STRUCTURAL SIGNIFICANT ITEM (SSI):
  - NUMBER F-13 OR F-14, BUT THE SUPPLEMENTAL INSPECTIONS GIVEN IN TABLE II WILL MEET THE SSID INSPECTION REQUIREMENTS FOR F-13A AND F-14A IN THE REPAIR AREA. HOWEVER, A NEW INSPECTION METHOD IS NECESSARY TO REPLACE THE EXTERNAL LFEC INSPECTION OF F-13B AND F-14B. SEE TABLE III FOR NEW REQUIREMENTS FOR F-13B AND F-14B.

  DO THE INTERNAL HFEC AND VISUAL INSPECTIONS FOR F-13B OR F-14B, IF NECESSARY, AT THE SUBSEQUENT SUPPLEMENTAL STRUCTURAL INSPECTION DOCUMENT (SSID) INSPECTION ON THIS AIRPLANE. REFER TO SRM 51-00-4, FIG.3, FOR THE APPLICABLE SSI DATA.
- D = THE FASTENER DIAMETER
- ALL DIMENSIONS ARE IN INCHES.
- ALL MACHINED SURFACES MUST HAVE A FINISH OF 125 MICROINCHES Ra.
- REFER TO FIG. 21 TO REPAIR THE FORWARD ENTRY DOOR UPPER HINGE CUTOUT.
- WHEN YOU USE THIS REPAIR REFER TO:
  - AMM 51-21 FOR INTERIOR AND EXTERIOR FINISHES
  - SOPM 20-44-04 FOR APPLICATION OF URETHANE COMPATIBLE FINISHES
  - SRM 51-00-6 FOR REPAIR CATEGORIES, DEFINITIONS AND REPAIR ASSESSMENT PROGRAM DATA
  - SRM 51-10-1 FOR INSPECTION AND REMOVAL OF DAMAGE
  - SRM 51-10-2 FOR PROTECTIVE TREATMENT OF METAL
  - SRM 51-20-4 FOR REPAIR SEALING
  - SRM 51-30 FOR FASTENER CODE, REMOVAL, INSTALLATION, HOLE SIZES AND EDGE MARGINS
  - SRM 51-30-8 FOR COUNTERSINKING AND USE OF COUNTERSINK REPAIR WASHER
  - SRM 51-70 FOR AERODYNAMIC SMOOTHNESS.

Skin and Bonded Doubler Repair - Forward Entry Door Lower Hinge Cutout
Figure 31 (Sheet 1)

BOEING PROPRIETARY - Copyright © - Unpublished Work - See title page for details.

NOTES (CONTINUED)

[A] THE THICKNESS OF THE FILLER MUST BE THE SAME AS THE THICKNESS OF THE DAMAGED SKIN AND BONDED DOUBLER.

[B] FOR CUM LINE NUMBERS: 1 THRU 997

[C] FOR CUM LINE NUMBERS: 998 AND ON

[D] THIS IS A REPAIR FASTENER LOCATION FOR CUM LINE NUMBERS: 292 THRU 295, 304, 309, 311, 321, 322. FOR ALL OTHER CUM LINE NUMBERS, THIS IS AN INITIAL FASTENER LOCATION.

[E] DO NOT CHAMFER THE AFT EDGE OF PART 1 DOUBLER.

[F] IF THE AIRPLANE HAS LESS THAN 66,000 FLIGHT CYCLES, THE INSPECTION THRESHOLD IS THE EARLIER OF:

- THE INITIAL SCHEDULED INSPECTION AS GIVEN IN THE OPERATOR'S REPAIR ASSESSMENT PROGRAM (RAP)
- 66,000 FLIGHT CYCLES.

IF THE AIRPLANE HAS MORE THAN 66,000 FLIGHT CYCLES AND THE INITIAL SCHEDULED SUPPLEMENTAL STRUCTURAL INSPECTION DOCUMENT (SSID) INSPECTION HAS BEEN PERFORMED, THE INSPECTION THRESHOLD IS:

- THE NEXT SCHEDULED SSID INSPECTION FOR THE STRUCTURALLY SIGNIFICANT ITEMS F-13A AND F-14A IN THE REPAIRED AREA.

[G] IF THE AIRPLANE HAS MORE THAN 66,000 FLIGHT CYCLES, DO THE NEW INSPECTION ALTERNATIVE AT THE SUBSEQUENT SCHEDULED SSID INSPECTION FOR F-13 OR F-14 ON THIS AIRPLANE.

FASTENER SYMBOLS

REFERENCE FASTENER LOCATION

INITIAL FASTENER LOCATION
INSTALL A BACB30LH3-()X BOLT WITH A BACN10JC3C NUT AND AN AN960-C10 WASHER.

INITIAL FASTENER LOCATION
INSTALL A BACB30FQ6A HEX DRIVE BOLT WITH A BACC30M COLLAR.

INITIAL FASTENER LOCATION
INSTALL A BACB30KF8A HEX DRIVE BOLT WITH A BACC30R COLLAR.

REPAIR FASTENER LOCATION
INSTALL A BACB30LH3-()X HEX DRIVE BOLT WITH A BACN10JC3C NUT AND AN AN960-C10 WASHER.

INITIAL FASTENER LOCATION
FOR HOLES THAT ARE NOT OVERSIZED, INSTALL A BACB30FM()A() HEX DRIVE BOLT WITH A BACC30M COLLAR. FOR HOLES UP TO 1/64 INCH OVERSIZE, INSTALL A BACB30FP()A() HEX DRIVE BOLT WITH A BACC30M COLLAR. FOR HOLES UP TO 1/32 INCH OVERSIZE, INSTALL A BACB30KK()A() HEX DRIVE BOLT WITH A BACC30R COLLAR.

REPAIR MATERIAL			
PART		QTY	MATERIAL
1	DOUBLER	1	0.063 CRES 301 1/2 HARD MIL-S-5059
2	FILLER	1	2024-T3 [A]

TABLE I

Skin and Bonded Doubler Repair - Forward Entry Door Lower Hinge Cutout
Figure 31 (Sheet 2)

BOEING PROPRIETARY - Copyright © - Unpublished Work - See title page for details.

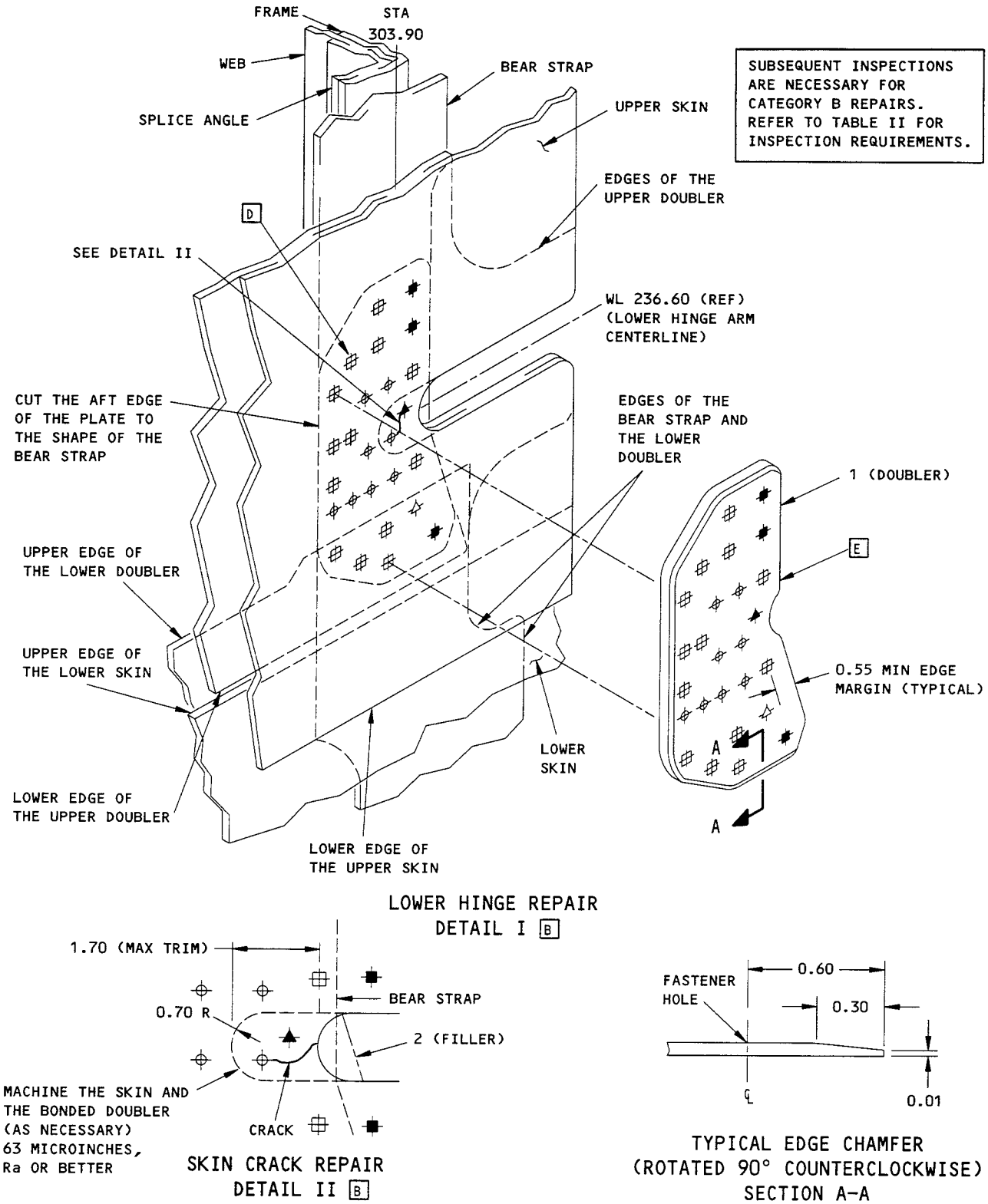

SUBSEQUENT INSPECTIONS ARE NECESSARY FOR CATEGORY B REPAIRS. REFER TO TABLE II FOR INSPECTION REQUIREMENTS.

Skin and Bonded Doubler Repair - Forward Entry Door Lower Hinge Cutout
Figure 31 (Sheet 3)

BOEING PROPRIETARY - Copyright © - Unpublished Work - See title page for details.

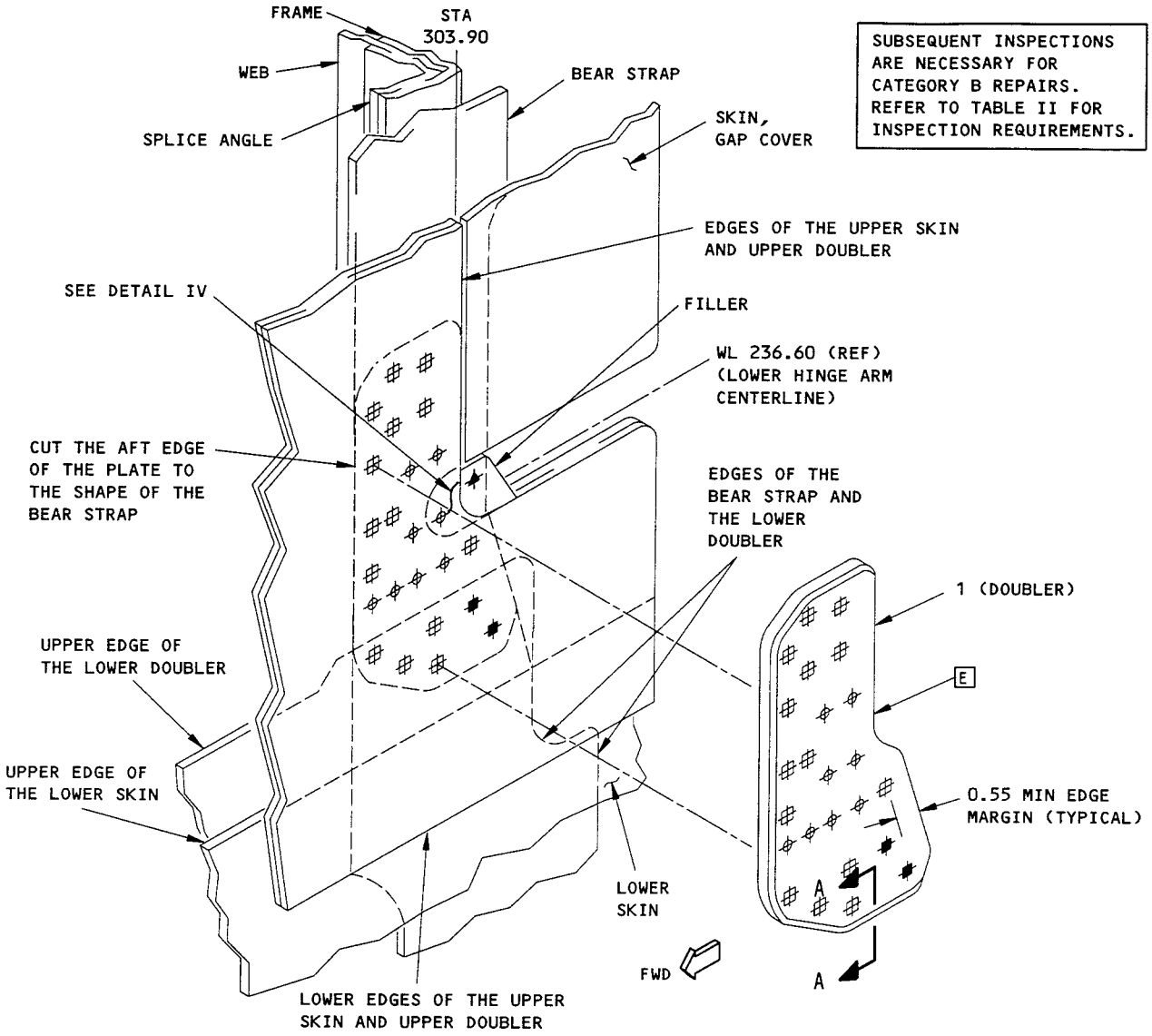

SUBSEQUENT INSPECTIONS ARE NECESSARY FOR CATEGORY B REPAIRS. REFER TO TABLE II FOR INSPECTION REQUIREMENTS.

LOWER HINGE REPAIR
DETAIL III C

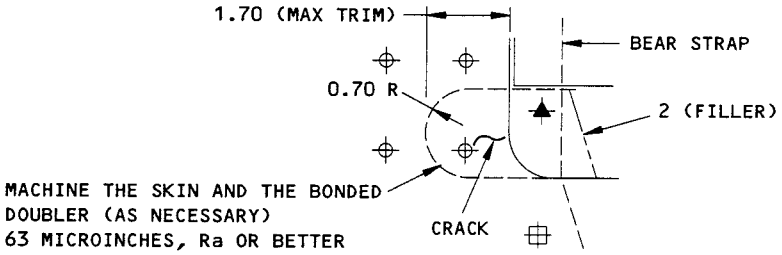

SKIN CRACK REPAIR
DETAIL IV C

Skin and Bonded Doubler Repair - Forward Entry Door Lower Hinge Cutout
Figure 31 (Sheet 4)

BOEING PROPRIETARY - Copyright © - Unpublished Work - See title page for details.

CATEGORY B REPAIR AND SSI F-13A AND F-14A INSPECTION REQUIREMENTS			
INSPECTION THRESHOLD	REPEAT INSPECTION ALTERNATIVES		
	METHOD	INTERVAL	REFERENCES
F	DETAILED VISUAL	4,000 FLIGHT CYCLES	
	MEDIUM FREQUENCY EDDY CURRENT (MFEC)	15,000 FLIGHT CYCLES	737 NDT, PART 6, 53-30-00, FIG. 6
	DETAILED VISUAL		

NOTE:
1) AT EVERY 4,000 FLIGHT CYCLES:
- DO A DETAILED VISUAL INSPECTION OF THE UPPER SKIN EXTERNALLY AROUND THE PART 1 DOUBLER AS SHOWN IN DETAIL V AND VI AS APPLICABLE.

2) AT EVERY 15,000 FLIGHT CYCLES:
- DO AN MFEC INSPECTION OF THE BEARSTRAP INTERNALLY AT THE UPPER AND LOWER ROWS OF THE PART 1 DOUBLER AS SHOWN IN DETAIL V AND VI AS APPLICABLE.
- DO A DETAILED VISUAL INSPECTION OF THE FRAME WEB INTERNALLY AS SHOWN IN DETAIL V AND VI AS APPLICABLE.

TABLE II

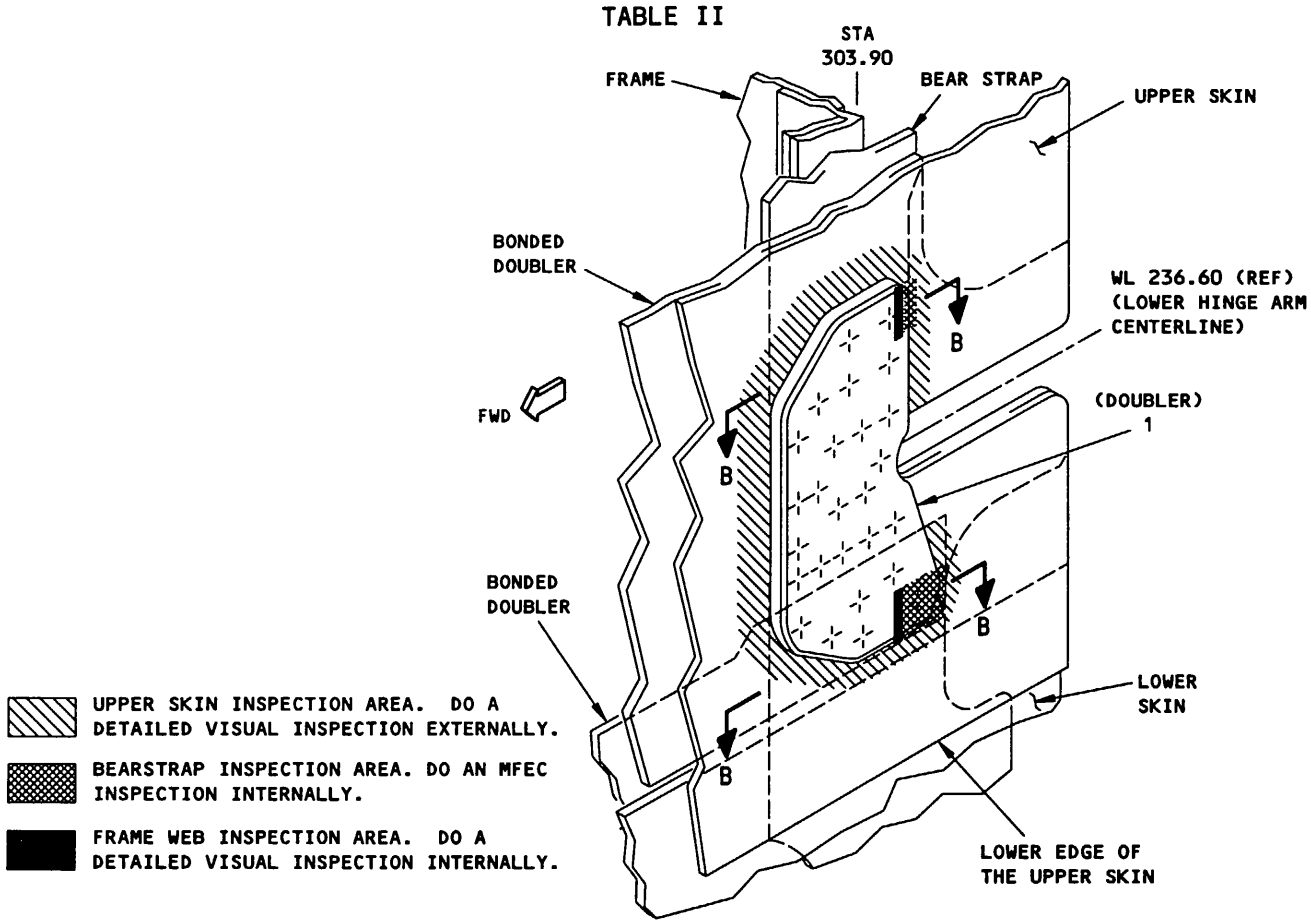

INSPECTION AREA FOR DETAIL I
DETAIL V B

Skin and Bonded Doubler Repair - Forward Entry Door Lower Hinge Cutout
Figure 31 (Sheet 5)

BOEING PROPRIETARY - Copyright © - Unpublished Work - See title page for details.

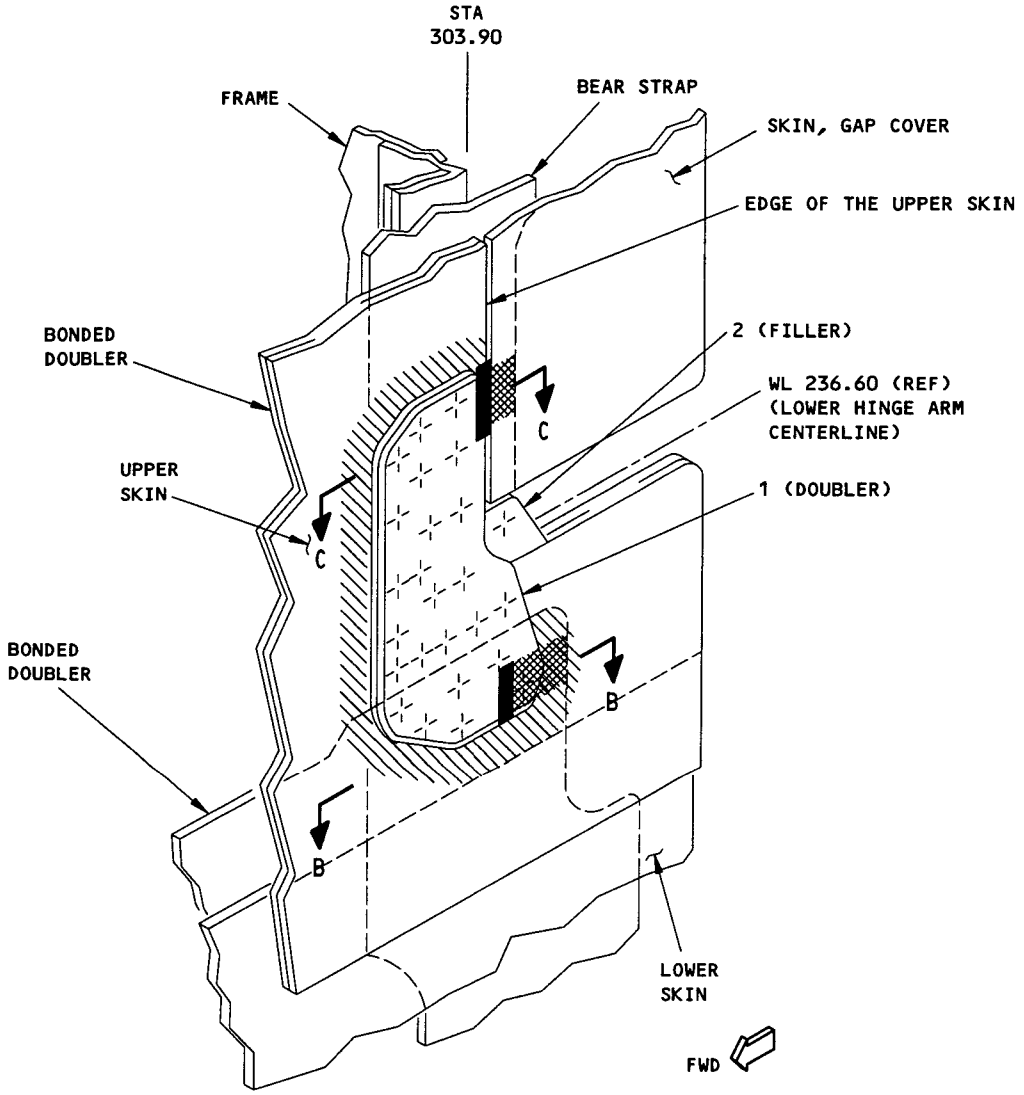

UPPER SKIN INSPECTION AREA. DO A DETAILED VISUAL INSPECTION EXTERNALLY.

BEARSTRAP INSPECTION AREA. DO AN MFEC INSPECTION INTERNALLY. YOU CAN DO AN EXTERNAL MFEC INSPECTION AT THE UPPER ROW IF THE GAP COVER SKIN IS REMOVED.

FRAME WEB INSPECTION AREA. DO A DETAILED VISUAL INSPECTION INTERNALLY.

INSPECTION AREA FOR DETAIL III
DETAIL VI C

Skin and Bonded Doubler Repair - Forward Entry Door Lower Hinge Cutout
Figure 31 (Sheet 6)

BOEING PROPRIETARY - Copyright © - Unpublished Work - See title page for details.

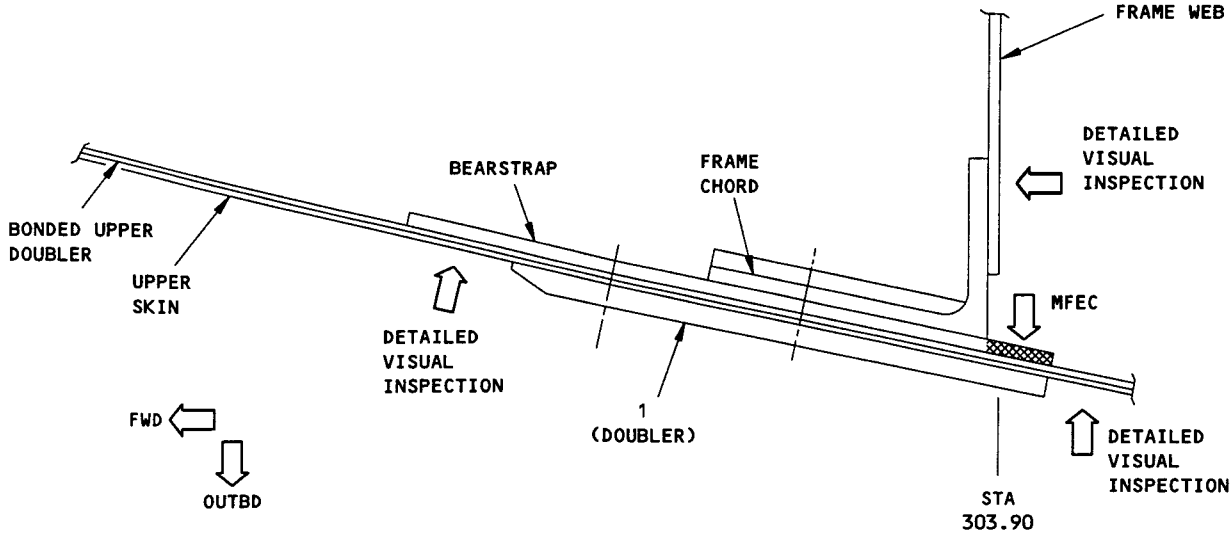

SECTION FOR THE UPPER ROW IS SHOWN,
ALMOST THE SAME FOR THE LOWER ROW
SECTION B-B

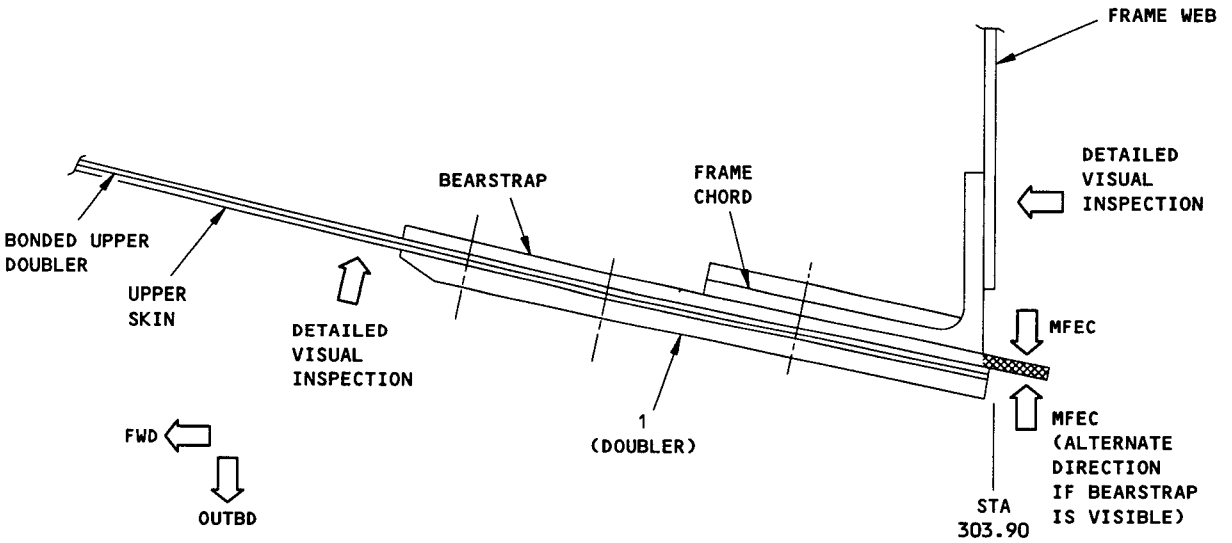

SECTION C-C

Skin and Bonded Doubler Repair - Forward Entry Door Lower Hinge Cutout
Figure 31 (Sheet 7)

BOEING PROPRIETARY - Copyright © - Unpublished Work - See title page for details.

SSI NUMBER F-13B AND F-14B INSPECTION REQUIREMENTS			
INSPECTION THRESHOLD	REPEAT INSPECTION		
	METHOD	INTERVAL	REFERENCE
66,000 FLIGHT CYCLES AFTER AIRPLANE DELIVERY G	HIGH FREQUENCY EDDY CURRENT (HFEC)	20,000 FLIGHT CYCLES	737 NDT, D6-37239, PART 6, 51-00-00, FIG. 4 OR 23
NOTE: INSPECT THE FRAME CHORD WITH HFEC METHOD INTERNALLY IN THE REPAIR AREA AS SHOWN IN DETAIL VII. IN ADDITION, INSPECT THE SKIN, BEARSTRAP, FRAMES AND SILLS PER THE EXISTING INTERNAL INSPECTIONS GIVEN IN THE 737 SSID DOCUMENT FOR F-13B AND F-14B.			

TABLE III

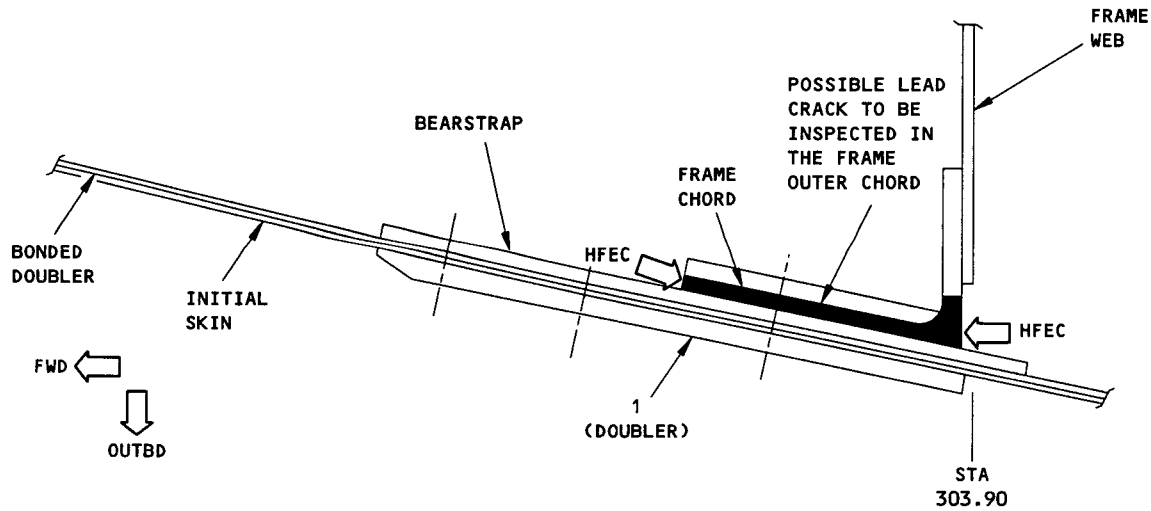

TYPICAL ALTERNATIVE INSPECTION FOR F-13B AND F-14B
DETAIL VII

Skin and Bonded Doubler Repair - Forward Entry Door Lower Hinge Cutout
Figure 31 (Sheet 8)

BOEING PROPRIETARY - Copyright © - Unpublished Work - See title page for details.

APPLICABILITY

THIS REPAIR APPLIES TO CRACKS IN THE AREA OF THE CUTOUT IN THE SKIN AND THE BONDED DOUBLER. TELL BOEING:

- IF THERE IS DELAMINATION OF THE BONDED DOUBLER
- IF A CRACK IS NOT IN THE AREA OF THE CUTOUT
- IF THE BEAR STRAP IS CRACKED
- IF THERE IS A CRACK IN THE LOWER SKIN.

BEFORE YOU DO THIS REPAIR, MAKE A MODIFICATION TO THE SKIN AS SHOWN IN FIGURE 3 OF SERVICE BULLETIN 737-53-1074.

REPAIR INSTRUCTIONS

1. Remove the fasteners from the repair area.
2. Move the skin apart from the bear strap.
3. Cut out the damaged skin. See Detail II.
4. Do a high frequency eddy current test along the edge of the cutout to make sure there are no cracks. If there are no cracks, make the cutout larger by 0.04 inch. Refer to SRM 51-10-1 and 737 NDT manual, Part 6, 53-10-08.
5. Make the repair parts. See Table I.
6. Assemble the repair parts and drill the fastener holes. See Detail I.
7. Disassemble the repair parts.
8. Remove the nicks, scratches, gouges, burrs, and sharp edges from the skin and the repair parts.
9. Apply a chemical conversion coating to the bare surfaces of the skin, to the bond doubler, to the part 2 filler, and to the part 3 filler. Refer to SRM 51-10-2.
10. Apply cadmium plating to the cres repair doubler. Refer to SRM 51-10-2.
11. Apply two layers of BMS 10-79, Type II primer to the edges and fay surface of the doubler. Apply one layer of BMS 10-79, Type II primer to the part 2 filler and the part 3 filler. Apply one layer of BMS 10-79, Type II primer to the bare surfaces of the skin. Refer SOPM 20-44-04.
12. Install repair washers in the countersunk holes in the skin panel. Refer to SRM 51-30-8.
13. Install the repair parts with BMS 5-95 sealant between the faying surfaces. Install the non-aluminum fasteners wet with BMS 5-95 sealant in close reamed holes.
14. Apply the finish to the repair area. Refer to AMM 51-21.

NOTES

- THIS REPAIR IS CATEGORY B. THE CATEGORY B REPAIR HAS FAA APPROVAL IF YOU DO THE SUPPLEMENTAL INSPECTIONS GIVEN IN TABLE II. INCORPORATION OF THESE INSPECTION REQUIREMENTS INTO THE AIRPLANE'S MAINTENANCE PROGRAM SATISFIES THE DAMAGE TOLERANCE ASSESSMENT OF THE REPAIR SPECIFIED BY THE REPAIR ASSESSMENT PROGRAM. THIS ASSESSMENT CAN BE DONE AFTER YOU RELEASE THE AIRPLANE TO SERVICE. REFER TO SRM 51-00-6 FOR GENERAL DATA ABOUT THE REPAIR ASSESSMENT PROGRAM. REFER TO DETAIL III FOR THE INSPECTION AREA.
- THIS REPAIR WILL HAVE AN EFFECT ON THE STRUCTURALLY SIGNIFICANT ITEM (SSI):
  - NUMBER F-15A AND B, BUT THE SUPPLEMENTAL INSPECTIONS GIVEN IN TABLE II WILL MEET THE SSID INSPECTION REQUIREMENTS FOR F-15A IN THE REPAIR AREA. HOWEVER, A NEW INSPECTION METHOD IS NECESSARY TO REPLACE THE X-RAY INSPECTION OF F-15B. SEE TABLE III FOR NEW REQUIREMENTS FOR F-15B.

  DO THE INTERNAL MFEC AND VISUAL INSPECTIONS FOR F-15B, IF NECESSARY, AT THE SUBSEQUENT SUPPLEMENTAL STRUCTURAL INSPECTION DOCUMENT (SSID) INSPECTION ON THIS AIRPLANE. REFER TO SRM 51-00-4, FIG. 3, FOR THE APPLICABLE SSI DATA.
- D = THE FASTENER DIAMETER
- ALL DIMENSIONS ARE IN INCHES.
- ALL MACHINED SURFACES MUST HAVE A FINISH OF 125 MICROINCHES Ra.
- REFER TO FIG. 20 TO REPAIR THE FORWARD GALLEY DOOR UPPER HINGE CUTOUT.

Skin and Bonded Doubler Repair - Forward Galley Door Lower Hinge Cutout
Figure 32 (Sheet 1)

BOEING PROPRIETARY - Copyright © - Unpublished Work - See title page for details.

NOTES (CONTINUED)

- WHEN YOU USE THIS REPAIR REFER TO:
  - AMM 51-21 FOR INTERIOR AND EXTERIOR FINISHES
  - NDT PART 6, 53-10-08 FOR EDDY CURRENT PROCEDURES OF FORWARD GALLEY DOOR CUTOUT
  - SOPM 20-44-04 FOR APPLICATION OF URETHANE COMPATIBLE FINISHES
  - SRM 51-00-6 FOR REPAIR CATEGORIES, DEFINITIONS AND REPAIR ASSESSMENT PROGRAM DATA
  - SRM 51-10-1 FOR INSPECTION AND REMOVAL OF DAMAGE
  - SRM 51-10-2 FOR PROTECTIVE TREATMENT OF METAL
  - SRM 51-20-4 FOR REPAIR SEALING
  - SRM 51-30 FOR FASTENER CODE, REMOVAL, INSTALLATION, HOLE SIZES AND EDGE MARGINS
  - SRM 51-30-8 FOR COUNTERSINKING AND USE OF COUNTERSINK REPAIR WASHER
  - SRM 51-70 FOR AERODYNAMIC SMOOTHNESS.

[A] THE THICKNESS OF THE FILLER MUST BE THE SAME AS THE THICKNESS OF THE UPPER SKIN AND BONDED DOUBLER.

[B] INSTALL A BACB30FN5A HEX DRIVE BOLT WITH BACC30M COLLAR FOR CUM LINE NUMBERS: 1 THRU 279,281,286,288,289,290.

[C] THE THICKNESS OF THE FILLER MUST BE THE SAME AS THE TOTAL THICKNESS OF:
- THE UPPER SKIN AND THE BONDED DOUBLER
- THE LOWER SKIN AND THE BONDED DOUBLER.

[D] DO NOT CHAMFER THE AFT EDGE OF THE PART 1 DOUBLER.

[E] IF THE AIRPLANE HAS LESS THAN 66,000 FLIGHT CYCLES, THE INSPECTION THRESHOLD IS THE EARLIER OF:
- THE INITIAL SCHEDULED INSPECTION AS GIVEN IN THE OPERATOR'S REPAIR ASSESSMENT PROGRAM (RAP)
- 66,000 FLIGHT CYCLES.

IF THE AIRPLANE HAS MORE THAN 66,000 FLIGHT CYCLES AND THE INITIAL SCHEDULED SUPPLEMENTAL STRUCTURAL INSPECTION DOCUMENT (SSID) INSPECTION HAS BEEN PERFORMED, THE INSPECTION THRESHOLD IS:
- THE NEXT SCHEDULED SSID INSPECTION FOR THE STRUCTURALLY SIGNIFICANT ITEM F-15A IN THE REPAIRED AREA.

[F] IF THE AIRPLANE HAS MORE THAN 66,000 FLIGHT CYCLES, DO THE NEW INSPECTION ALTERNATIVE AT THE SUBSEQUENT SCHEDULED SSID INSPECTION FOR F-15 ON THIS AIRPLANE.

FASTENER SYMBOLS

- REFERENCE FASTENER LOCATION
- INITIAL FASTENER LOCATION
  INSTALL A BACB30KF6A HEX DRIVE BOLT WITH A BACC30R COLLAR.
- INITIAL FASTENER LOCATION
  INSTALL A BACB30FQ6A HEX DRIVE BOLT WITH A BACC30M COLLAR.
- INITIAL FASTENER LOCATION
  INSTALL A BACB30FN6A HEX DRIVE BOLT WITH A BACC30M COLLAR.
- REPAIR FASTENER LOCATION
  INSTALL A BACB30FN6A HEX DRIVE BOLT WITH A BACC30M COLLAR.

REPAIR MATERIAL

PART		QTY	MATERIAL
1	DOUBLER	1	0.063 CRES 301 1/2 HARD MIL-S-5059
2	FILLER	1	2024-T4 [A] CLAD
3	FILLER	1	2024-T3 [C] CLAD

TABLE I

Skin and Bonded Doubler Repair - Forward Galley Door Lower Hinge Cutout
Figure 32 (Sheet 2)

F14983

BOEING PROPRIETARY - Copyright © - Unpublished Work - See title page for details.

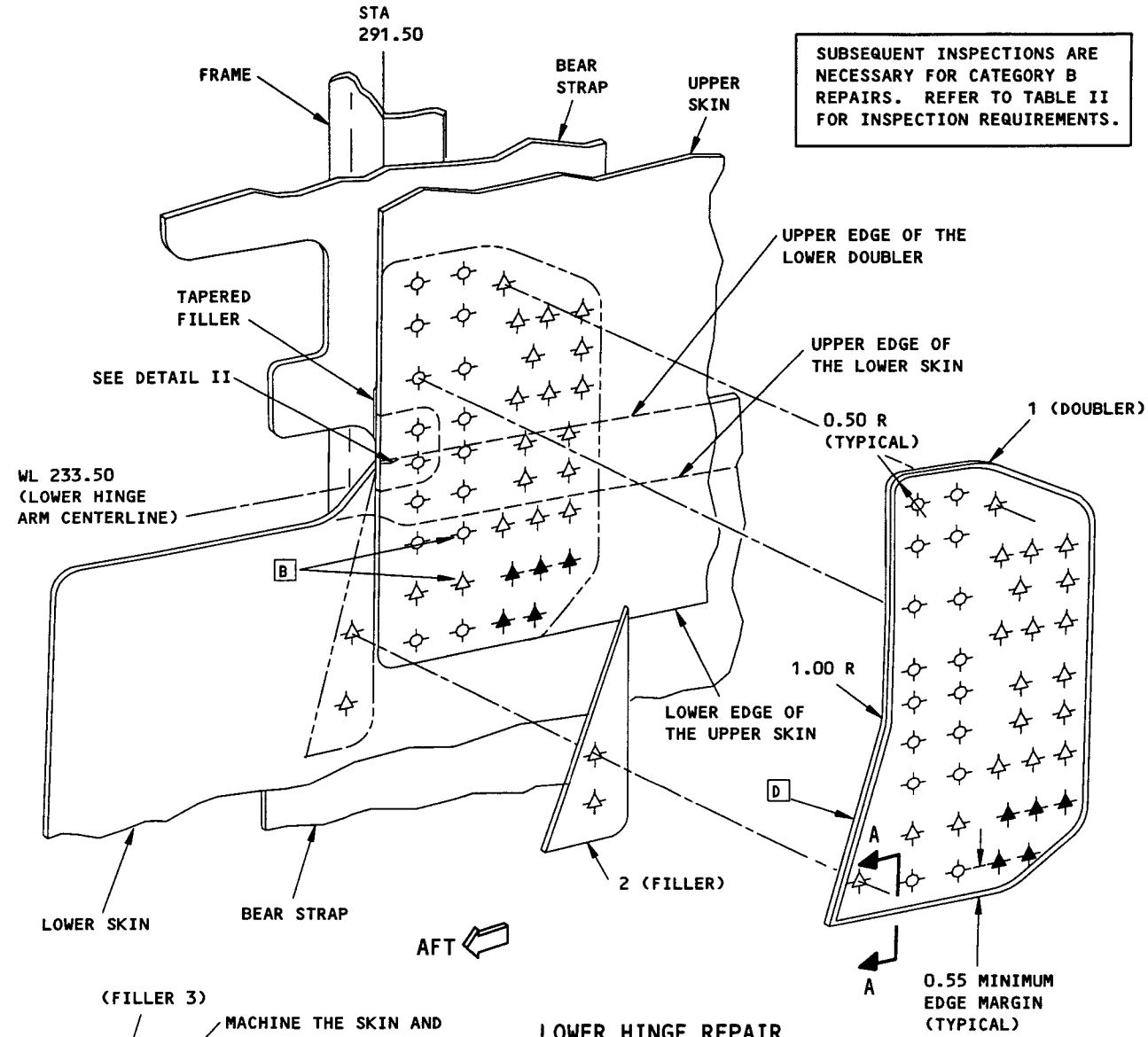

LOWER HINGE REPAIR
DETAIL I

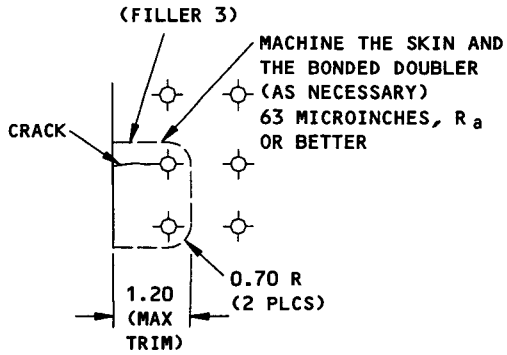

SKIN CRACK REPAIR
DETAIL II

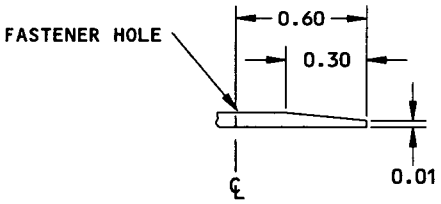

TYPICAL EDGE CHAMFER
SECTION A-A

SUBSEQUENT INSPECTIONS ARE NECESSARY FOR CATEGORY B REPAIRS. REFER TO TABLE II FOR INSPECTION REQUIREMENTS.

Skin and Bonded Doubler Repair - Forward Galley Door Lower Hinge Cutout
Figure 32 (Sheet 3)

BOEING PROPRIETARY - Copyright © - Unpublished Work - See title page for details.

CATEGORY B REPAIR AND SSI F-15A INSPECTION REQUIREMENTS			
INSPECTION THRESHOLD	REPEAT INSPECTION ALTERNATIVES		
	METHOD	INTERVAL	REFERENCES
E	DETAILED VISUAL	4,000 FLIGHT CYCLES	
	MEDIUM FREQUENCY EDDY CURRENT (MFEC)	15,000 FLIGHT CYCLES	737 NDT, PART 6, 53-30-00, FIG. 6
	DETAILED VISUAL		

NOTE:

1) AT EVERY 4,000 FLIGHT CYCLES:
   - DO A DETAILED VISUAL INSPECTION OF THE UPPER AND LOWER SKINS EXTERNALLY AROUND THE PART 1 DOUBLER AND PART 2 FILLER AS SHOWN IN DETAIL III.
2) AT EVERY 15,000 FLIGHT CYCLES:
   - DO AN MFEC INSPECTION OF THE BEARSTRAP INTERNALLY AT THE LOWER ROW AND INTERNALLY (OR EXTERNALLY) AT THE UPPER ROW OF THE REPAIR PART AS SHOWN IN DETAIL III.
   - DO A DETAILED VISUAL INSPECTION OF THE FRAME WEB INTERNALLY AS SHOWN IN DETAIL III.

TABLE II

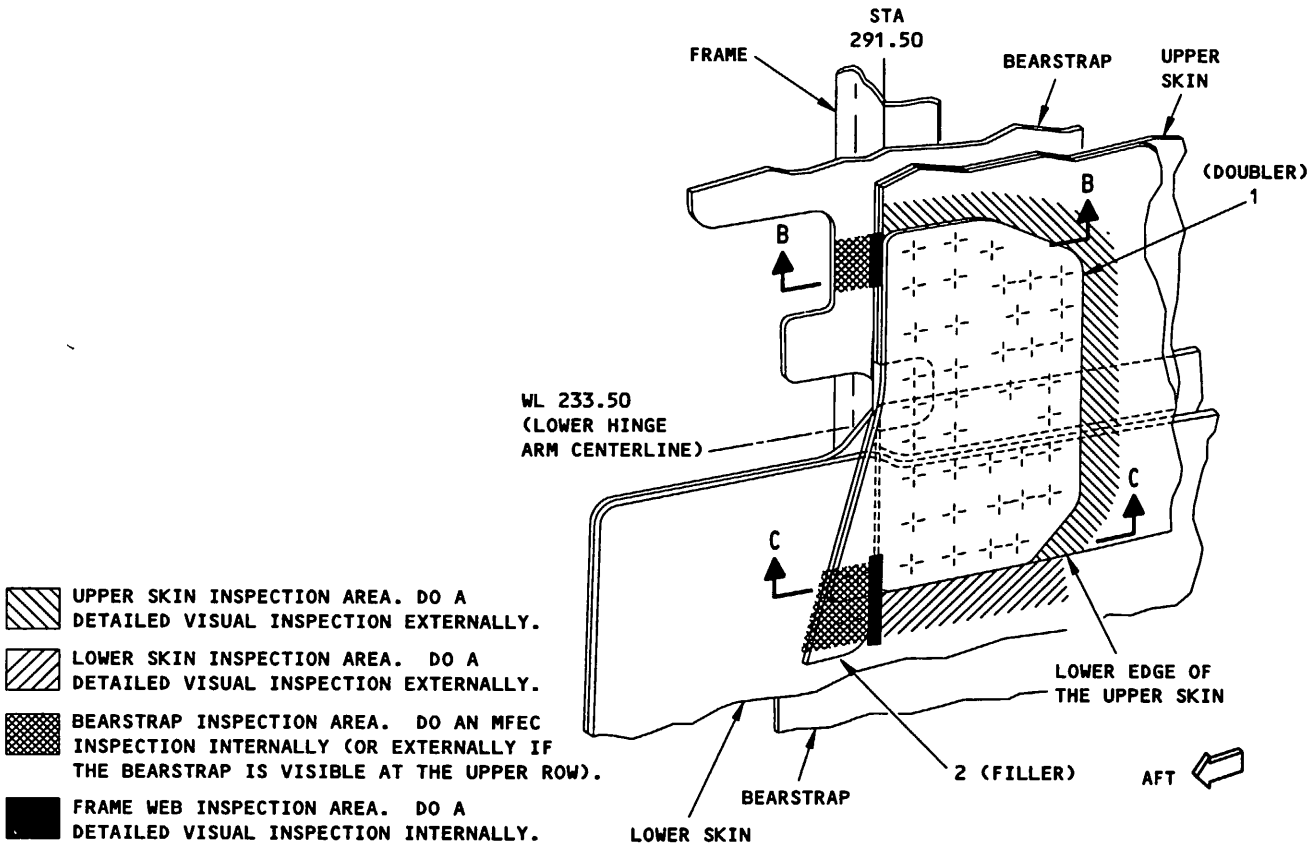

DETAIL III

Skin and Bonded Doubler Repair - Forward Galley Door Lower Hinge Cutout
Figure 32 (Sheet 4)

BOEING PROPRIETARY - Copyright © - Unpublished Work - See title page for details.

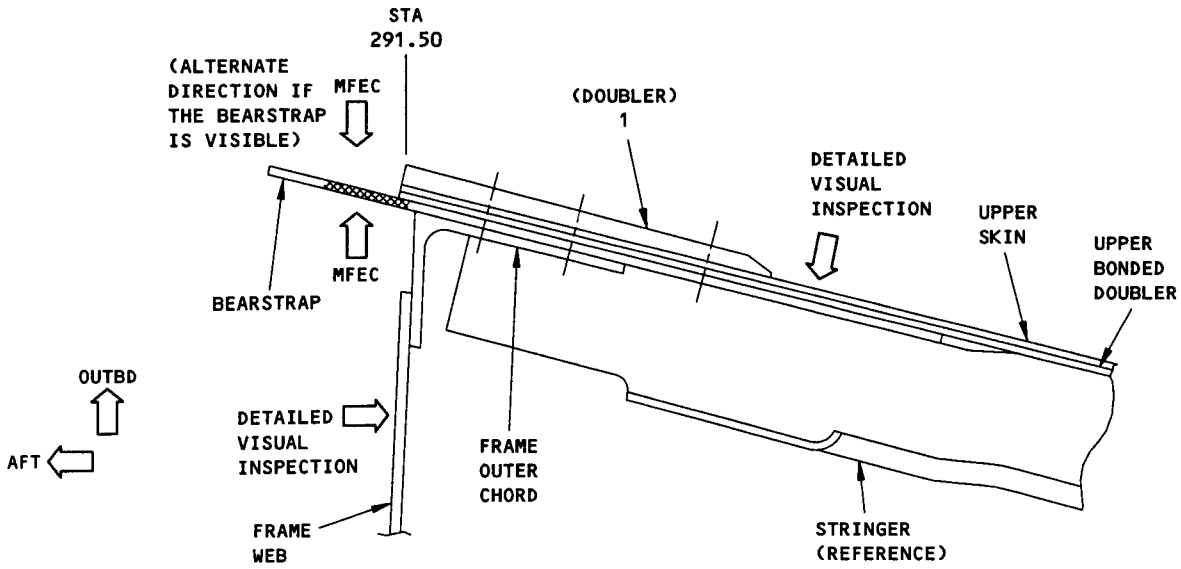

SECTION B-B

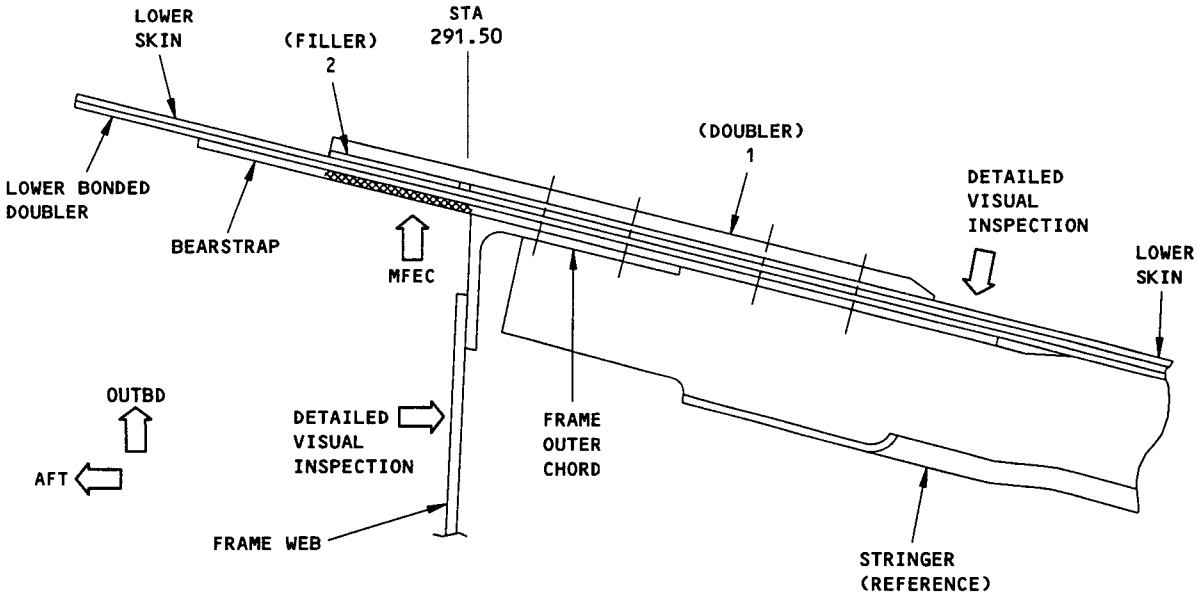

SECTION C-C

Skin and Bonded Doubler Repair - Forward Galley Door Lower Hinge Cutout
Figure 32 (Sheet 5)

BOEING PROPRIETARY - Copyright © - Unpublished Work - See title page for details.

SSI NUMBER F-15B INSPECTION REQUIREMENTS			
INSPECTION THRESHOLD	REPEAT INSPECTIONS		
	METHOD	INTERVAL	REFERENCE
66,000 FLIGHT CYCLES AFTER AIRPLANE DELIVERY F	HIGH FREQUENCY EDDY CURRENT (HFEC)	20,000 FLIGHT CYCLES	737 NDT, D6-37239, PART 6, 51-00-00, FIG. 4 OR 23
NOTE: INSPECT THE FRAME CHORD WITH HFEC METHOD IN THE REPAIR AREA AS SHOWN IN DETAIL IV. IN ADDITION, INSPECT THE SKIN, BEARSTRAP, FRAMES AND SILLS PER THE EXISTING INTERNAL INSPECTIONS GIVEN IN THE 737 SSID DOCUMENT FOR F-15B.			

TABLE III

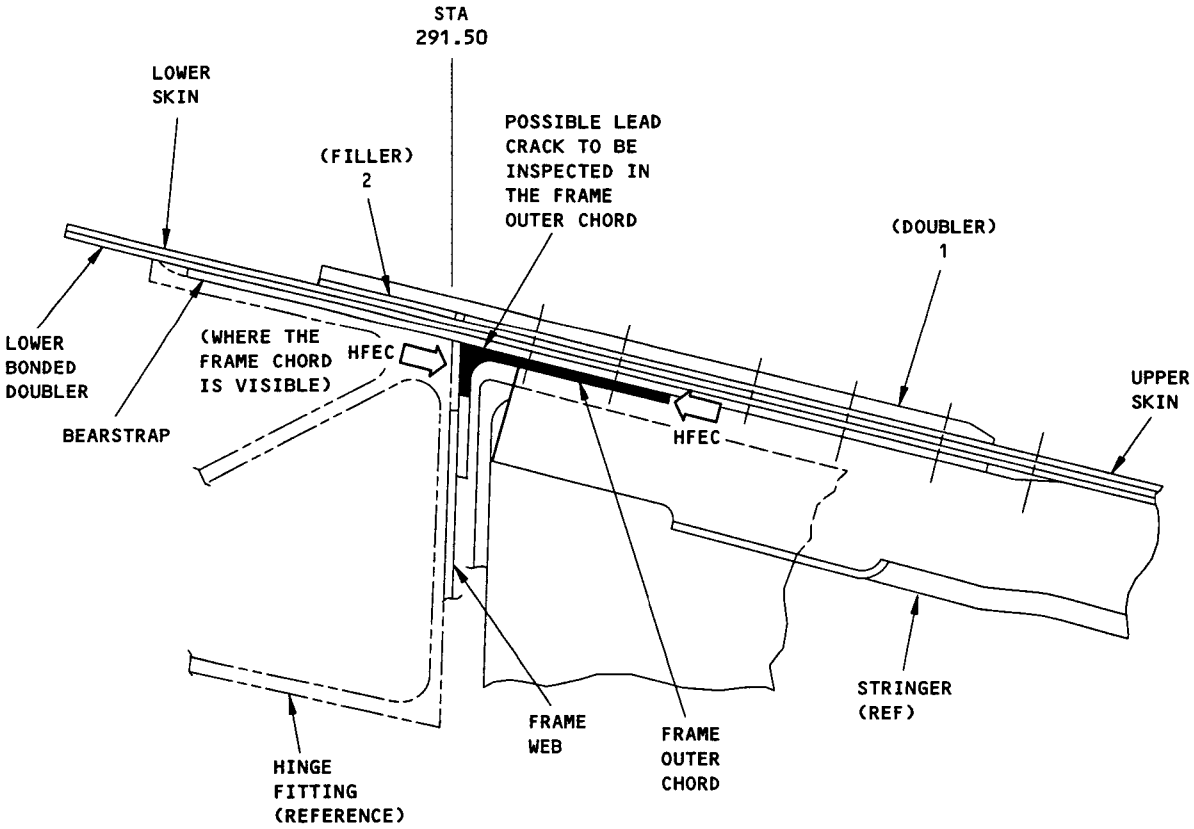

TYPICAL INSPECTION ALTERNATIVE FOR F-15B

DETAIL IV

Skin and Bonded Doubler Repair - Forward Galley Door Lower Hinge Cutout
Figure 32 (Sheet 6)

BOEING PROPRIETARY - Copyright © - Unpublished Work - See title page for details.

APPLICABILITY

THIS REPAIR APPLIES TO AIRPLANES WITH CUM LINE NUMBERS FROM 1 TO 1014 THAT HAVE A CRACK IN THE SKIN AND BONDED DOUBLER ONLY; IT DOES NOT APPLY TO CRACKS IN THE BEARSTRAP.

CONTACT BOEING BEFORE YOU DO A REPAIR:

- IF THE DAMAGE IS LARGER THAN THE PERMITTED CUTOUT. THE MAXIMUM PERMITTED CUTOUT IS SHOWN IN DETAIL III.
- IF THERE IS DELAMINATION BETWEEN THE SKIN AND THE DOUBLER
- IF THE BEARSTRAP IS CRACKED.

REPAIR INSTRUCTIONS

1. Remove the fasteners from the repair area.
2. Move the skin and the doubler apart from the bearstrap. Put a piece of thin steel sheet between the bearstrap and the skin to protect the bearstrap.

   CAUTION: BEFORE YOU INSTALL THE REPAIR, YOU MUST INSPECT THE SKIN UNDER AND AROUND THE REPAIR AREA FOR SIGNS OF CORROSION OR DISBONDING.
3. Carefully cut out the skin or the skin and the doubler. Do not damage the structure below the skin and the doubler. See Detail III.
4. Do a High Frequency Eddy Current (HFEC) inspection along the edge of the cutout area to make sure there are no cracks. If there are no cracks, make the cutout larger by 0.04 inch. Refer to NDT Part 6, 51-00-00, Fig. 4 for the HFEC procedure. Do a penetrant inspection of the exposed surface of the bearstrap.
5. Make the repair parts. See Details II and IV and Table I. Make the repair doubler fit the contour of the skin.
6. Assemble the repair parts.
7. Drill the fastener holes. See Detail II.
8. Remove the repair parts.
9. Remove all nicks, scratches, gouges, burrs, and sharp edges from the repair parts and the skin. Make the 0.75 radius of the repair doubler and tripler, and the edge of the crack cutout have a finish of 63 microinches R_a.

   All other machined surfaces must have a finish of 125 microinches R_a.
10. Apply a chemical conversion coating to the repair doubler, the filler, and to the bare surfaces of the skin and hinge flapper. Refer to SRM 51-10-2.
11. Apply cadmium plating to the repair tripler. Refer to SRM 51-10-2.
12. Apply two layers of BMS 10-79, Type II primer to the repair tripler. Apply one layer of BMS 10-79, Type II primer to the repair doubler, the filler, and the bare surfaces of the skin. Refer to SOPM 20-44-04.
13. Install the repair washers in the countersink holes in the skin panel. Install them with BMS 5-95 sealant. Refer to SRM 51-30-8.
14. Install the repair parts with BMS 5-95 sealant on all of the faying surfaces.
15. Shim all gaps greater than 0.01 before you install the fasteners.
16. Install the fasteners wet with BMS 5-95 sealant in close reamed holes.
17. Put BMS 5-95 aerodynamic smoother in the gap between the repair doubler and upper skin and between the filler and lower skin.
18. Apply a finish to the repair area. Refer to AMM 51-21.
19. Apply corrosion inhibiting compound on the internal surfaces. Refer to SRM 51-10-2.

NOTES

- THIS REPAIR IS CATEGORY B. THE CATEGORY B REPAIR HAS FAA APPROVAL IF YOU DO THE SUPPLEMENTAL INSPECTIONS GIVEN IN TABLE II. INCORPORATION OF THESE INSPECTION REQUIREMENTS INTO THE AIRPLANE'S MAINTENANCE PROGRAM SATISFIES THE DAMAGE TOLERANCE ASSESSMENT OF THE REPAIR SPECIFIED BY THE REPAIR ASSESSMENT PROGRAM. THIS ASSESSMENT CAN BE DONE AFTER YOU RELEASE THE AIRPLANE TO SERVICE. REFER TO SRM 51-00-06 FOR GENERAL DATA ABOUT THE REPAIR ASSESSMENT PROGRAM. SEE DETAIL V FOR THE INSPECTION AREA.
- THIS REPAIR WILL HAVE AN EFFECT ON THE STRUCTURALLY SIGNIFICANT ITEM (SSI):
  - NUMBER F-16A, B AND C, BUT THE SUPPLEMENTAL INSPECTIONS GIVEN IN TABLE II WILL MEET THE SSID INSPECTION REQUIREMENTS FOR F-16A IN THE REPAIR AREA. HOWEVER, THE INTERNAL INSPECTION ALTERNATIVES FOR F-16B AND C ARE STILL APPLICABLE. ALSO, A NEW INSPECTION METHOD IS NECESSARY FOR THE EXTERNAL INSPECTIONS OF THE F-16C. SEE TABLE III FOR NEW REQUIREMENTS FOR F-16C.

  DO THE INTERNAL INSPECTIONS FOR F-16B AND C, IF NECESSARY, AT THE SUBSEQUENT SUPPLEMENTAL STRUCTURAL INSPECTION DOCUMENT (SSID) INSPECTION ON THIS AIRPLANE. REFER TO SRM 51-00-4, FIG. 3 FOR THE APPLICABLE SSI DATA.

Skin and Doubler Repair - Aft Galley Door Lower Hinge Cutout
Figure 33 (Sheet 1)

BOEING PROPRIETARY - Copyright © - Unpublished Work - See title page for details.

NOTES (CONTINUED)

- WHEN YOU USE THIS REPAIR REFER TO:
  - AMM 51-21 FOR INTERIOR AND EXTERIOR FINISHES
  - NDT PART 6, 51-00-00, FIG. 4 FOR HIGH FREQUENCY EDDY CURRENT PROCEDURES
  - SOPM 20-44-04 FOR APPLICATION OF URETHANE COMPATIBLE FINISHES
  - SRM 51-00-6 FOR REPAIR CATEGORIES, DEFINITIONS, AND REPAIR ASSESSMENT PROGRAM DATA
  - SRM 51-10-1 FOR INSPECTION AND REMOVAL OF DAMAGE
  - SRM 51-10-2 FOR PROTECTIVE TREATMENT OF METALS
  - SRM 51-20-4 FOR REPAIR SEALING
  - SRM 51-30 FOR FASTENER CODE, REMOVAL, INSTALLATION, HOLE SIZES, EDGE MARGINS AND SUBSTITUTION
  - SRM 51-30-8 FOR COUNTERSINKING AND USE OF COUNTERSINK REPAIR WASHERS
  - SRM 51-70 FOR AERODYNAMIC SMOOTHNESS REQUIREMENTS.
- ALL DIMENSIONS ARE IN INCHES, UNLESS SHOWN DIFFERENTLY.

[A] THE THICKNESS OF THE FILLER MUST BE EQUAL TO THE TOTAL THICKNESS OF THE SKIN, OR THE SKIN AND THE DOUBLER.

[B] THIS DETAIL SHOWS THE MAXIMUM PERMITTED CUTOUT. IF THE DAMAGE CANNOT BE REMOVED WITH THIS CUTOUT TELL THE BOEING COMPANY.

[C] THE THICKNESS OF THE DOUBLER MUST BE EQUAL TO THE THICKNESS OF THE UPPER SKIN.

[D] MAKE THE EDGE HAVE A FINISH OF 63 MICRO-INCHES R_a.

[E] REFER TO SB 737-53-1039. IF IT IS APPLICABLE, INSPECT THE FASTENER HOLES AND OVERSIZE AS SHOWN IN THE SERVICE BULLETIN BEFORE YOU INSTALL THE TRIPLER.

[F] IF THE AIRPLANE HAS MORE THAN 66,000 FLIGHT CYCLES, DO THE NEW INSPECTION ALTERNATIVE AT THE SUBSEQUENT SCHEDULED SSID INSPECTION FOR F-16 ON THIS AIRPLANE.

[G] IF THE AIRPLANE HAS LESS THAN 66,000 FLIGHT CYCLES, THE INSPECTION THRESHOLD IS THE EARLIER OF:

- THE INITIAL SCHEDULED INSPECTION AS GIVEN IN THE OPERATOR'S REPAIR ASSESSMENT PROGRAM (RAP)
- 66,000 FLIGHT CYCLES.

IF THE AIRPLANE HAS MORE THAN 66,000 FLIGHT CYCLES AND THE INITIAL SCHEDULED SUPPLEMENTAL STRUCTURAL INSPECTION DOCUMENT (SSID) INSPECTION HAS BEEN PERFORMED, THE INSPECTION THRESHOLD IS:

- THE NEXT SCHEDULED SSID INSPECTION FOR THE STRUCTURALLY SIGNIFICANT ITEM F-16A IN THE REPAIRED AREA.

FASTENER SYMBOLS

REFERENCE FASTENER LOCATION.

INITIAL FASTENER LOCATION. INSTALL A BACB30FQ6A HEX DRIVE BOLT WITH A BACC30M COLLAR (1/64 OVERSIZE). IF THE FASTENER HOLE GETS DAMAGED, YOU CAN USE A 1/32 OVERSIZE BACB30KF6A HEX DRIVE BOLT WITH A BACC30R COLLAR.

REPAIR FASTENER LOCATION. INSTALL A BACB30FN6A HEX DRIVE BOLT WITH A BACC30M COLLAR.

INITIAL FASTENER LOCATION. INSTALL A BACB30FM8A HEX DRIVE BOLT WITH A BACC30M COLLAR.

REPAIR MATERIAL			
PART		QTY	MATERIAL
1	DOUBLER	1	CLAD 2024-T3 [C]
2	TRIPLER	1	0.063 INCH THICK CRES 1/2 HARD 301 (AS SPECIFIED IN MIL-S-5059)
3	FILLER	1	CLAD 2024-T3 [A]

TABLE I

Skin and Doubler Repair - Aft Galley Door Lower Hinge Cutout
Figure 33 (Sheet 2)

BOEING PROPRIETARY - Copyright © - Unpublished Work - See title page for details.

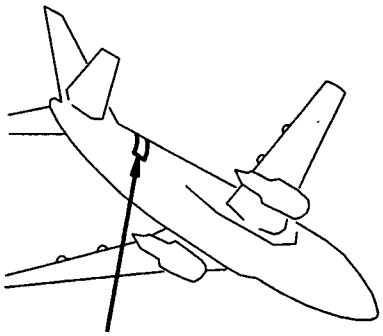

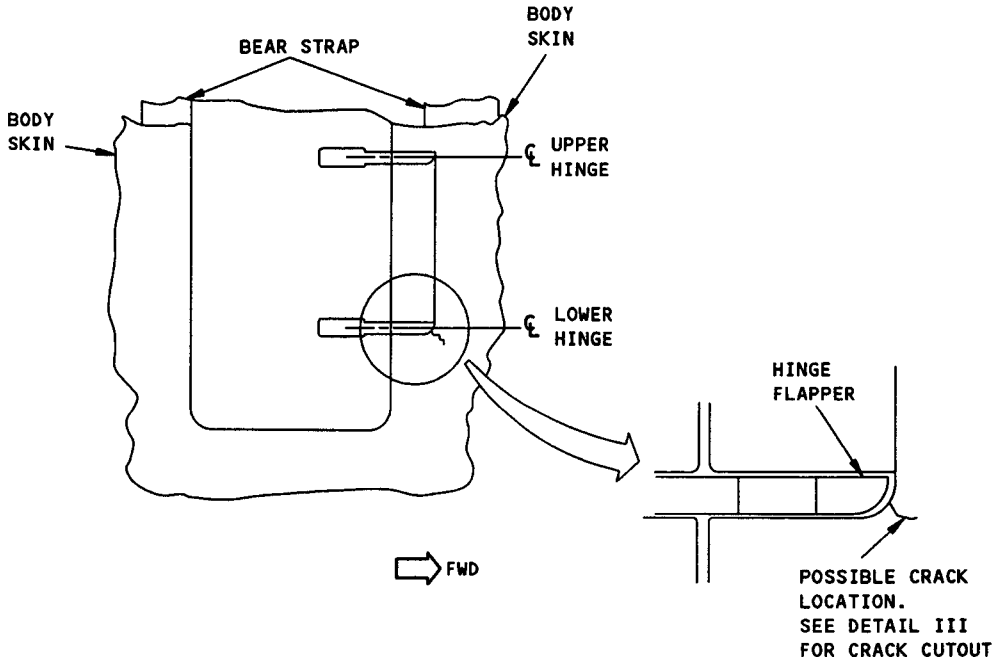

AFT GALLEY DOOR LOWER HINGE
DETAIL I

Skin and Doubler Repair - Aft Galley Door Lower Hinge Cutout
Figure 33 (Sheet 3)

BOEING PROPRIETARY - Copyright © - Unpublished Work - See title page for details.

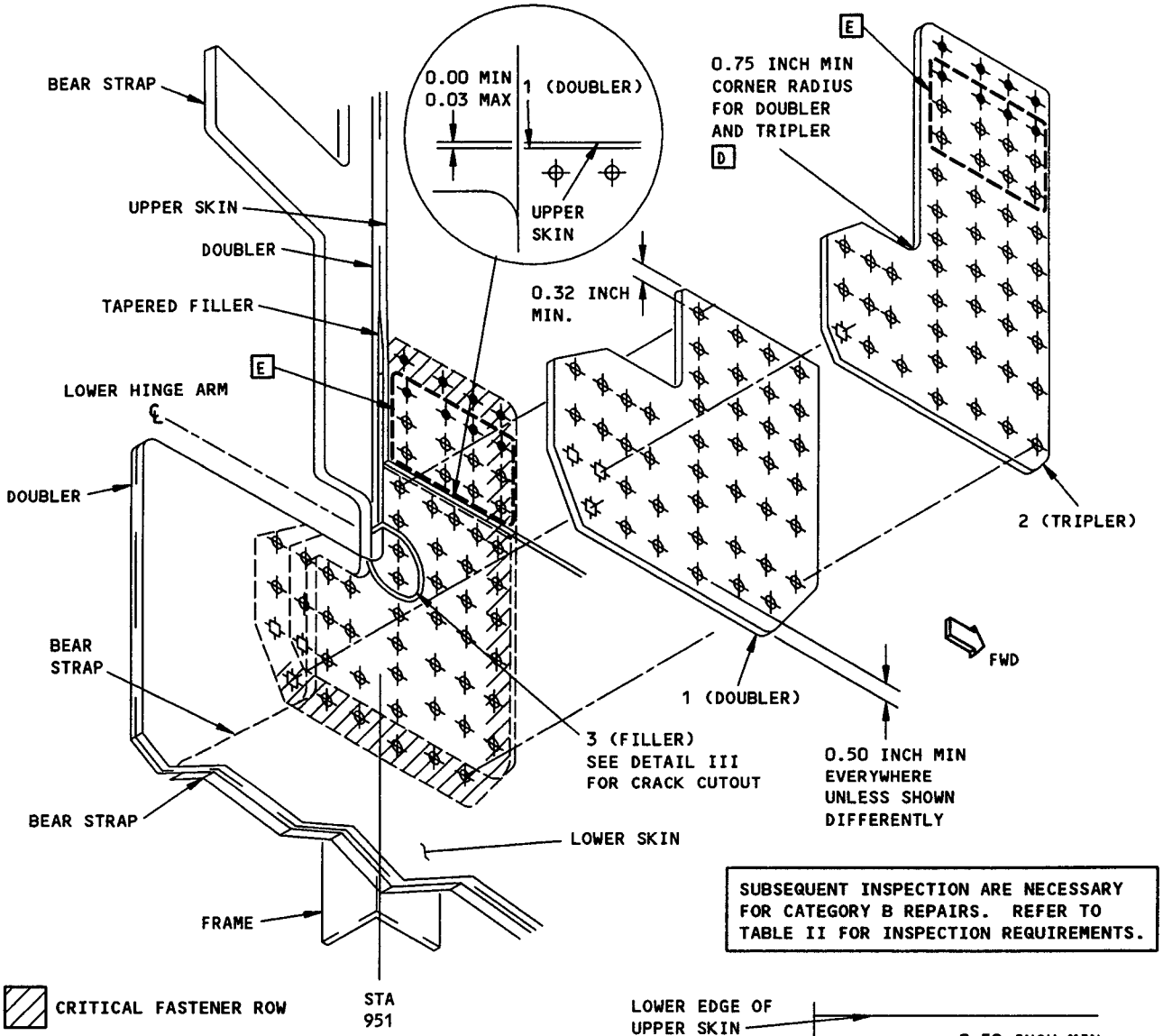

SUBSEQUENT INSPECTION ARE NECESSARY FOR CATEGORY B REPAIRS. REFER TO TABLE II FOR INSPECTION REQUIREMENTS.

LOWER HINGE REPAIR
DETAIL II

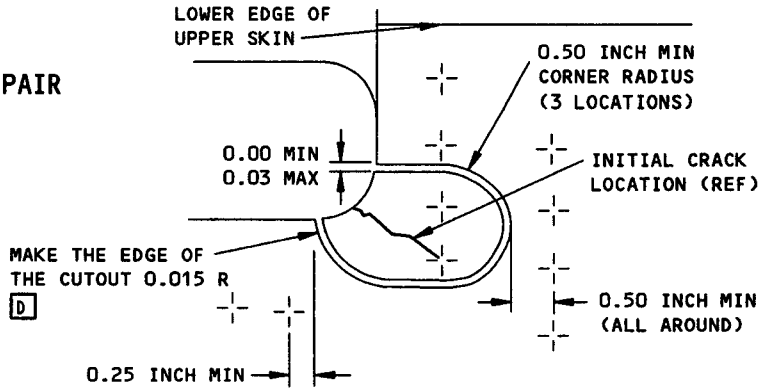

SKIN CRACK CUTOUT B
DETAIL III

Skin and Doubler Repair - Aft Galley Door Lower Hinge Cutout
Figure 33 (Sheet 4)

BOEING PROPRIETARY - Copyright © - Unpublished Work - See title page for details.

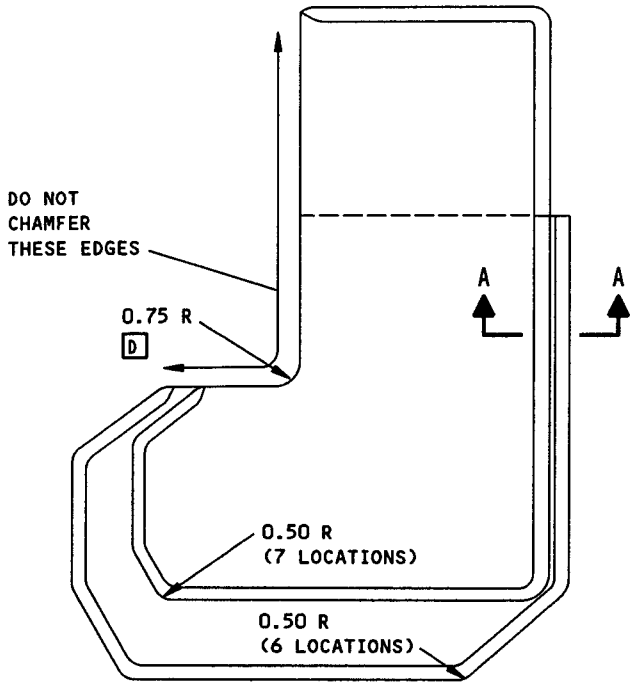

DETAIL IV

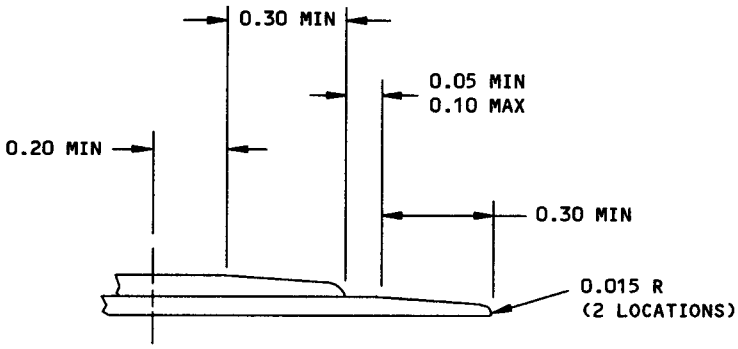

SECTION A-A

Skin and Doubler Repair - Aft Galley Door Lower Hinge Cutout
Figure 33 (Sheet 5)

BOEING PROPRIETARY - Copyright © - Unpublished Work - See title page for details.

CATEGORY B REPAIR AND SSI F-16A INSPECTION REQUIREMENTS			
INSPECTION THRESHOLD	REPEAT INSPECTION ALTERNATIVES		
	METHOD	INTERVAL	REFERENCES
G	DETAILED VISUAL	4,000 FLIGHT CYCLES	
	MEDIUM FREQUENCY EDDY CURRENT (MFEC)	15,000 FLIGHT CYCLES	737 NDT, PART 6, 53-30-00, FIG. 6
	DETAILED VISUAL		

NOTE:

1) AT EVERY 4,000 FLIGHT CYCLES:
   - DO A DETAILED VISUAL INSPECTION OF THE UPPER AND LOWER SKINS EXTERNALLY AROUND THE PART 1 DOUBLER AND PART 2 TRIPLER AS SHOWN IN DETAIL V.
2) AT EVERY 15,000 FLIGHT CYCLES:
   - DO AN MFEC INSPECTION OF THE BEARSTRAP INTERNALLY (OR EXTERNALLY) AT THE UPPER ROW AND INTERNALLY AT THE LOWER ROW OF THE REPAIR PART AS SHOWN IN DETAIL V.
   - DO A DETAILED VISUAL INSPECTION OF THE FRAME WEB INTERNALLY AS SHOWN IN DETAIL V.

TABLE II

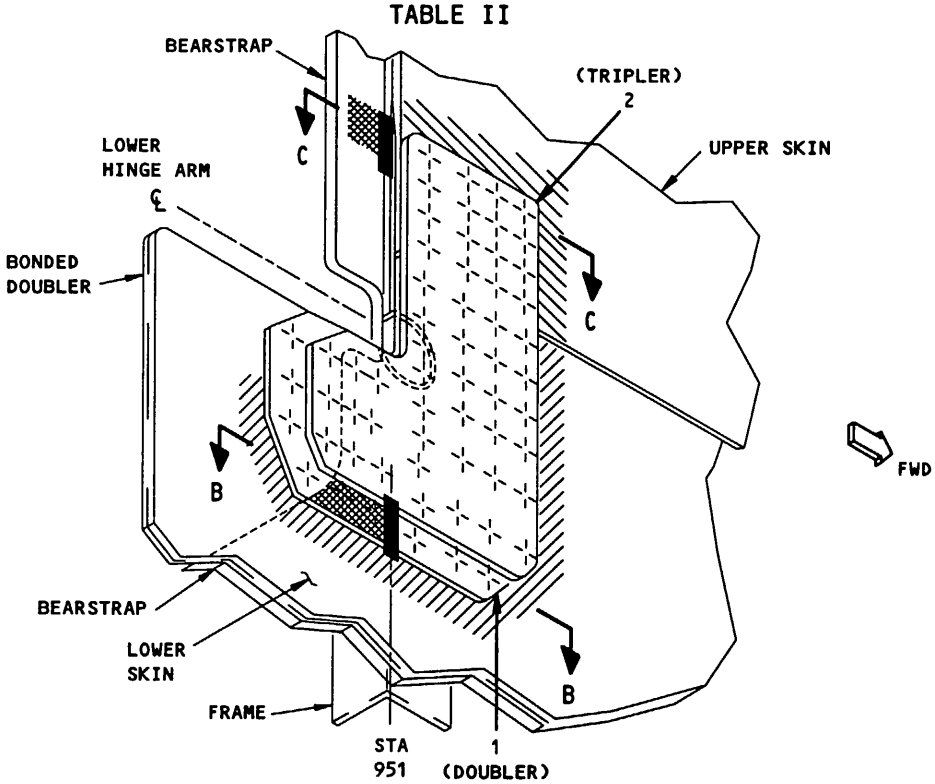

UPPER SKIN INSPECTION AREA. DO A DETAILED VISUAL INSPECTION EXTERNALLY.

LOWER SKIN INSPECTION AREA. DO A DETAILED VISUAL INSPECTION EXTERNALLY.

BEARSTRAP INSPECTION AREA. DO AN MFEC INSPECTION INTERNALLY (OR EXTERNALLY IF THE BEARSTRAP IS VISIBLE AT THE UPPER ROW).

FRAME WEB INSPECTION AREA. DO A DETAILED VISUAL INSPECTION INTERNALLY.

INSPECTION AREA FOR DETAIL II
DETAIL V

Skin and Doubler Repair - Aft Galley Door Lower Hinge Cutout
Figure 33 (Sheet 6)

BOEING PROPRIETARY - Copyright © - Unpublished Work - See title page for details.

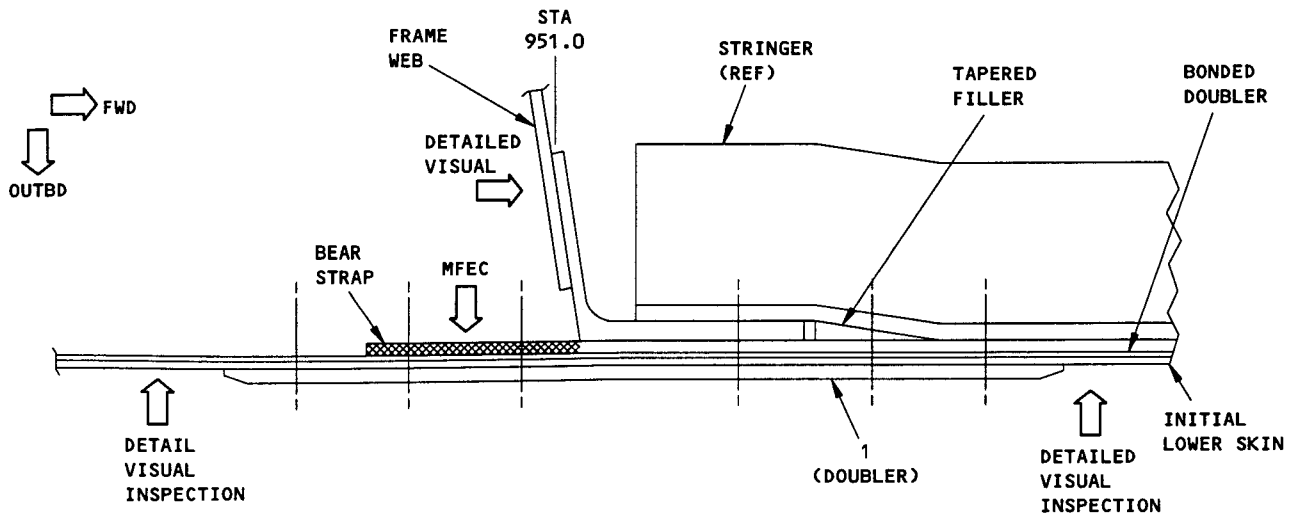

SECTION B-B

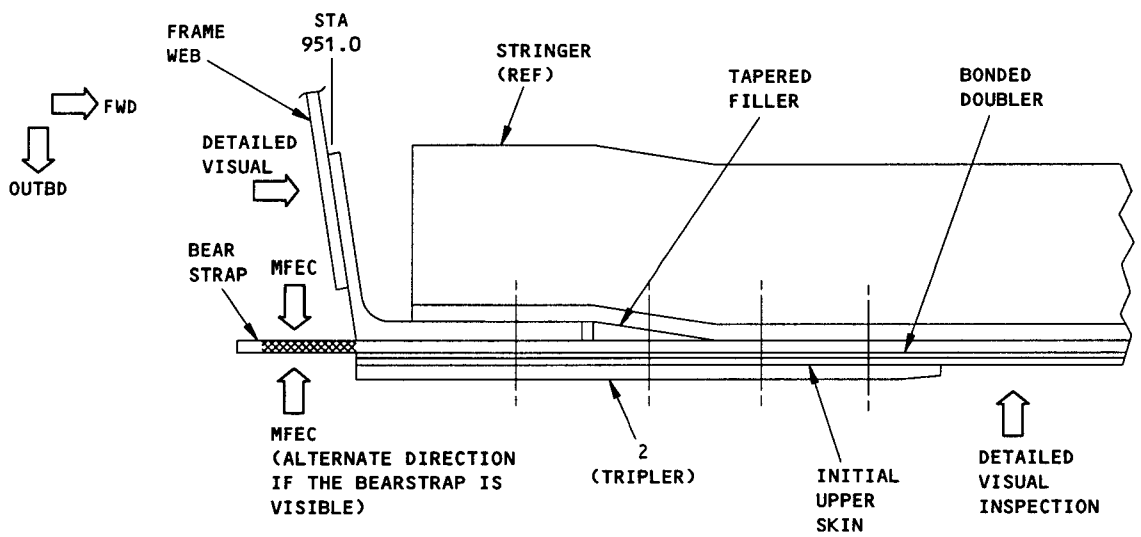

SECTION C-C

Skin and Doubler Repair - Aft Galley Door Lower Hinge Cutout
Figure 33 (Sheet 7)

BOEING PROPRIETARY - Copyright © - Unpublished Work - See title page for details.

SSI NUMBER F-16C INSPECTION REQUIREMENTS			
INSPECTION THRESHOLD	REPEAT INSPECTION		
	METHOD	INTERVAL	REFERENCE
66,000 FLIGHT CYCLES AFTER AIRPLANE DELIVERY F	HIGH FREQUENCY EDDY CURRENT (HFEC)	24,000 FLIGHT CYCLES	737 NDT, D6-37239, PART 6, 51-00-00, FIG. 4 OR 23
NOTE: INSPECT THE FRAME CHORD WITH HFEC METHOD INTERNALLY IN THE REPAIR AREA AS SHOWN IN DETAIL VI. IN ADDITION, INSPECT THE SKIN, BEARSTRAP, FRAMES AND SILLS PER THE EXISTING INTERNAL INSPECTIONS GIVEN IN THE 737 SSID DOCUMENT FOR F-16C.			

TABLE III

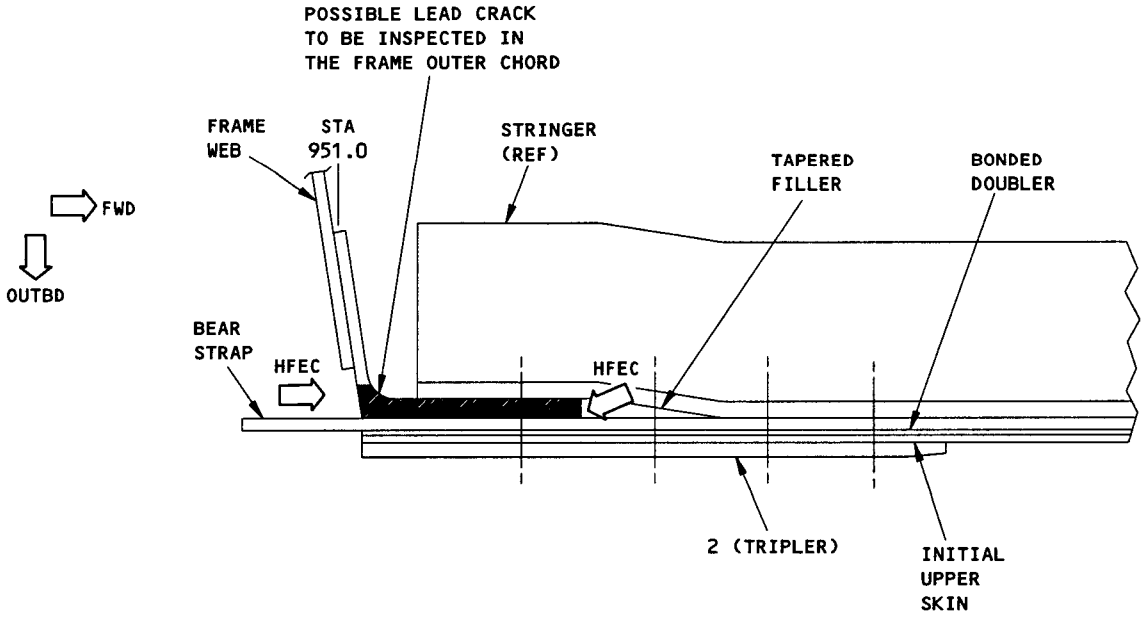

INSPECTION AREA FOR F-16C (TYPICAL)

DETAIL VI

Skin and Doubler Repair - Aft Galley Door Lower Hinge Cutout
Figure 33 (Sheet 8)

BOEING PROPRIETARY - Copyright © - Unpublished Work - See title page for details.

APPLICABILITY

THIS REPAIR APPLIES TO AIRPLANES WITH CUM LINE NUMBERS FROM 1 TO 1014 THAT HAVE A CRACK IN THE SKIN AND BONDED DOUBLER ONLY; IT DOES NOT APPLY TO CRACKS IN THE BEAR STRAP.

CONTACT BOEING BEFORE YOU DO A REPAIR:

- IF THE DAMAGE IS LARGER THAN THE PERMITTED CUTOUT. THE MAXIMUM PERMITTED CUTOUT IS SHOWN IN DETAIL III.
- IF THERE IS DELAMINATION BETWEEN THE SKIN AND THE DOUBLER
- IF THE BEAR STRAP IS CRACKED.

REPAIR INSTRUCTIONS

1. Remove the fasteners from the repair area.
2. Move the skin and the doubler apart from the bear strap. Insert a piece of thin steel sheet between the bear strap and the skin to protect the bear strap.

   CAUTION: BEFORE YOU INSTALL THE REPAIR, YOU MUST INSPECT THE SKIN UNDER AND AROUND THE REPAIR AREA FOR SIGNS OF CORROSION OR DISBONDING.

3. Carefully cut out the skin or the skin and the doubler. Do not damage the structure below the skin and the doubler. See Detail III.
4. Do a high frequency eddy current test along the edge of the cutout area to make sure there are no cracks. If there are no cracks, make the cutout larger by 0.04. Refer to NDT Part 6, 51-00-00, Fig. 4 for the high frequency eddy current procedure. Do a penetrant inspection of the exposed surface of the bearstrap.
5. Make the repair parts. See Details II and IV and Table I. Make the repair doubler fit the contour of the skin.
6. Assemble the repair parts.
7. Drill the fastener holes. See Detail II.
8. Remove the repair parts.
9. Remove all nicks, scratches, gouges, burrs, and sharp edges from the repair parts and the skin. Make the 0.75 radius of the repair doubler and tripler, and the edge of the crack cutout have a finish of 63 microinches R_a.

   All other machined surfaces must have a finish of 125 microinches R_a.
10. Apply a chemical conversion coating to the repair doubler, the filler, and to the bare surfaces of the skin and hinge flapper. Refer to SRM 51-10-2.
11. Apply cadmium plating to the repair tripler. Refer to SRM 51-10-2.
12. Apply two layers of BMS 10-79, Type II primer to the repair tripler. Apply one layer of BMS 10-79, Type II primer to the repair doubler, the filler, and the bare surfaces of the skin. Refer to SOPM 20-44-04.
13. Install the repair washers in the countersink holes in the skin panel. Install them with BMS 5-95 sealant. Refer to SRM 51-30-8.
14. Install the repair parts with BMS 5-95 sealant on all of the faying surfaces.
15. Before you install the fasteners, put shims in all gaps larger than 0.01.
16. Install the fasteners wet with BMS 5-95 sealant in close reamed holes.
17. Put BMS 5-95 aerodynamic smoother in the gap between the repair skin and the inlet skin.
18. Apply a finish to the repair area. Refer to AMM 51-21.

NOTES

- THIS REPAIR IS CATEGORY B. THE CATEGORY B REPAIR HAS FAA APPROVAL IF YOU DO THE SUPPLEMENTAL INSPECTIONS GIVEN IN TABLE II. INCORPORATION OF THESE INSPECTION REQUIREMENTS INTO THE AIRPLANE'S MAINTENANCE PROGRAM SATIFIES THE DAMAGE TOLERANCE ASSESSMENT OF THE REPAIR SPECIFIED BY THE REPAIR ASSESSMENT PROGRAM. THIS ASSESSMENT CAN BE DONE AFTER YOU RELEASE THE AIRPLANE TO SERVICE. REFER TO SRM 51-00-06 FOR GENERAL DATA ABOUT THE REPAIR ASSESSMENT PROGRAM. SEE DETAIL V FOR THE INSPECTION AREA.
- THIS REPAIR WILL HAVE AN EFFECT ON THE STRUCTURALLY SIGNIFICANT ITEM (SSI):
  - NUMBER F-17A, B AND C WHEN INSTALLED AT THE AFT ENTRY DOOR CUTOUT WITHOUT AIRSTAIRS, BUT THE SUPPLEMENTAL INSPECTIONS GIVEN IN TABLE II WILL MEET THE SSID INSPECTION REQUIREMENTS FOR F-17A IN THE REPAIR AREA. HOWEVER, THE INTERNAL INSPECTION ALTERNATIVES FOR F-17B AND C ARE STILL APPLICABLE. ALSO, A NEW INSPECTION METHOD IS NECESSARY FOR THE EXTERNAL INSPECTIONS OF F-17C. SEE TABLE III FOR NEW REQUIREMENTS FOR F-17C IN THE REPAIR AREA.

  DO THE INTERNAL INSPECTIONS FOR F-17B AND C, IF NECESSARY, AT THE SUBSEQUENT SUPPLEMENTAL STRUCTURAL INSPECTION DOCUMENT (SSID) INSPECTION ON THIS AIRPLANE. REFER TO SRM 51-00-4, FIG. 3, FOR THE APPLICABLE SSI DATA.

Skin and Doubler Repair - Aft Entry Door Lower Hinge Cutout
Figure 34 (Sheet 1)

BOEING PROPRIETARY - Copyright © - Unpublished Work - See title page for details.

NOTES (CONTINUED)

- WHEN YOU USE THIS REPAIR REFER TO:
  - AMM 51-21 FOR INTERIOR AND EXTERIOR FINISHES
  - NDT PART 6, 51-00-00, FIG. 4 FOR HIGH FREQUENCY EDDY CURRENT PROCEDURES
  - SOPM 20-44-04 FOR APPLICATION OF URETHANE COMPATIBLE FINISHES
  - SRM 51-00-6 FOR REPAIR CATEGORIES, DEFINITIONS, AND REPAIR ASSESSMENT PROGRAM DATA
  - SRM 51-10-1 FOR INSPECTION AND REMOVAL OF DAMAGE
  - SRM 51-10-2 FOR PROTECTIVE TREATMENT OF METALS
  - SRM 51-20-4 FOR REPAIR SEALING
  - SRM 51-30 FOR FASTENER CODE, REMOVAL, INSTALLATION, HOLE SIZES, EDGE MARGINS AND SUBSTITUTIONS
  - SRM 51-30-8 FOR COUNTERSINKING AND USE OF COUNTERSINK REPAIR WASHERS
  - SRM 51-70 FOR AERODYNAMIC SMOOTHNESS REQUIREMENTS.
- ALL DIMENSIONS ARE IN INCHES, UNLESS SHOWN DIFFERENTLY.

[A] THE THICKNESS OF THE FILLER MUST BE EQUAL TO THE TOTAL THICKNESS OF THE SKIN, OR THE SKIN AND THE DOUBLER.

[B] THIS DETAIL SHOWS THE MAXIMUM PERMITTED CUTOUT. IF THE DAMAGE CANNOT BE REMOVED WITH THIS CUTOUT TELL THE BOEING COMPANY.

[C] THE THICKNESS OF THE DOUBLER MUST BE EQUAL TO THE THICKNESS OF THE UPPER SKIN.

[D] MAKE THE EDGE HAVE A FINISH OF 63 MICRO-INCHES Ra .

[E] REFER TO SB 737-53-1039. IF IT IS APPLICABLE: BEFORE YOU INSTALL THE TRIPLER, INSPECT THE FASTENER HOLES AND OVERSIZE AS SHOWN IN THE SERVICE BULLETIN.

[F] IF THE AIRPLANE HAS MORE THAN 66,000 FLIGHT CYCLES, DO THE NEW INSPECTION ALTERNATIVE AT THE SUBSEQUENT SCHEDULED SSID INSPECTION FOR F-17 ON THIS AIRPLANE.

[G] IF THE AIRPLANE HAS LESS THAN 66,000 FLIGHT CYCLES, THE INSPECTION THRESHOLD IS THE EARLIER OF:

- THE INITIAL SCHEDULED INSPECTION AS GIVEN IN THE OPERATOR'S REPAIR ASSESSMENT PROGRAM (RAP)
- 66,000 FLIGHT CYCLES.

IF THE AIRPLANE HAS MORE THAN 66,000 FLIGHT CYCLES AND THE INITIAL SCHEDULED SUPPLEMENTAL STRUCTURAL INSPECTION DOCUMENT (SSID) INSPECTION HAS BEEN PERFORMED, THE INSPECTION THRESHOLD IS:

- THE NEXT SCHEDULED SSID INSPECTION FOR THE STRUCTURALLY SIGNIFICANT ITEM F-17A IN THE REPAIRED AREA.

FASTENER SYMBOLS

REFERENCE FASTENER LOCATION.

INITIAL FASTENER LOCATION. INSTALL A BACB30FQ6A HEX DRIVE BOLT WITH A BACC30M COLLAR (1/64 OVERSIZE). IF THE FASTENER HOLE GETS DAMAGED, YOU CAN USE A 1/32 OVERSIZE BACB30KF6A HEX DRIVE BOLT WITH A BACC30R COLLAR.

REPAIR FASTENER LOCATION. INSTALL A BACB30FN6A HEX DRIVE BOLT WITH A BACC30M COLLAR.

INITIAL FASTENER LOCATION. INSTALL A BACB30FM8A HEX DRIVE BOLT WITH A BACC30M COLLAR.

REPAIR MATERIAL			
PART		QTY	MATERIAL
1	DOUBLER	1	CLAD 2024-T3 [C]
2	TRIPLER	1	0.063 INCH CRES 1/2 HARD 301 (AS SPECIFIED IN MIL-S-5059)
3	FILLER	1	CLAD 2024-T3 [A]

TABLE I

Skin and Doubler Repair - Aft Entry Door Lower Hinge Cutout
Figure 34 (Sheet 2)

BOEING PROPRIETARY - Copyright © - Unpublished Work - See title page for details.

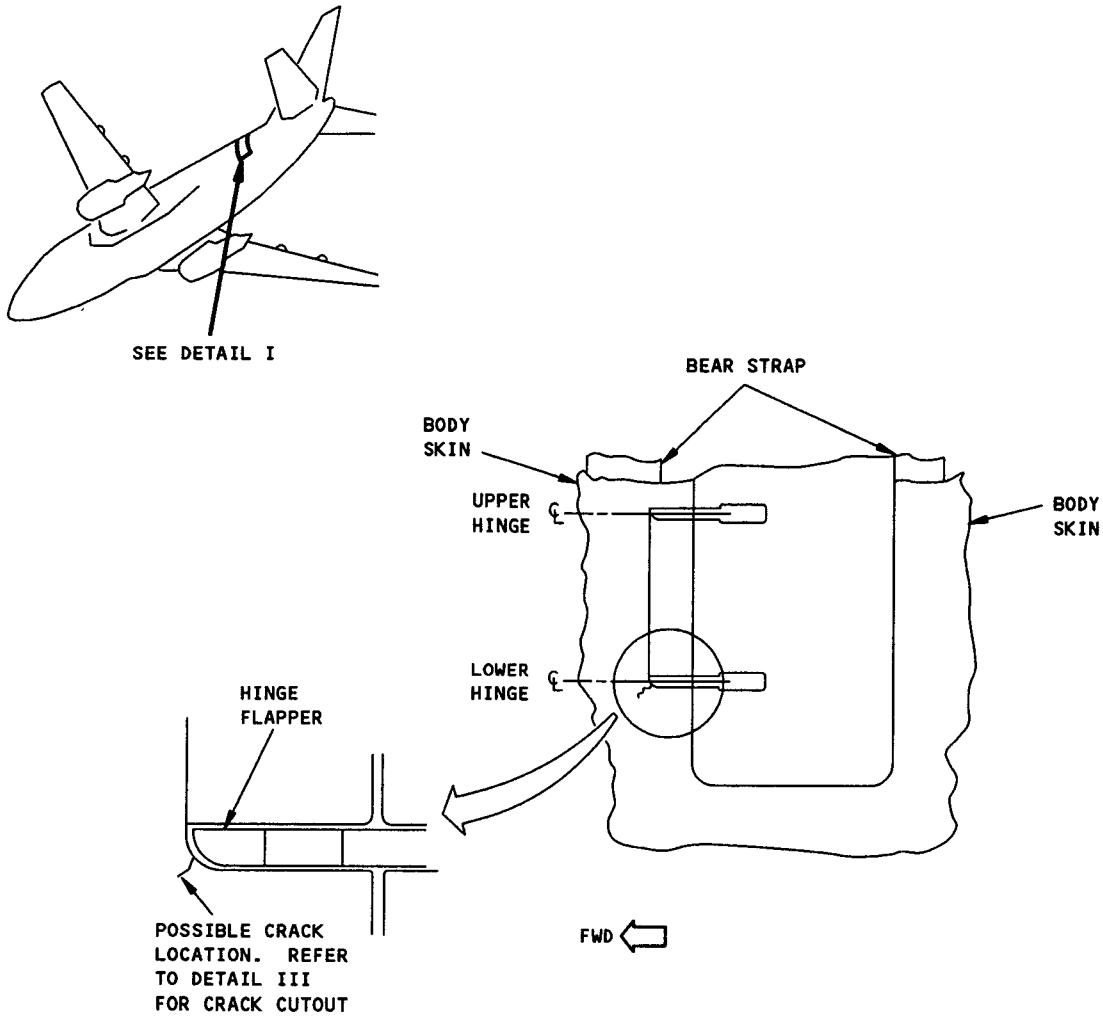

AFT ENTRY DOOR LOWER HINGE
DETAIL I

Skin and Doubler Repair - Aft Entry Door Lower Hinge Cutout
Figure 34 (Sheet 3)

BOEING PROPRIETARY - Copyright © - Unpublished Work - See title page for details.

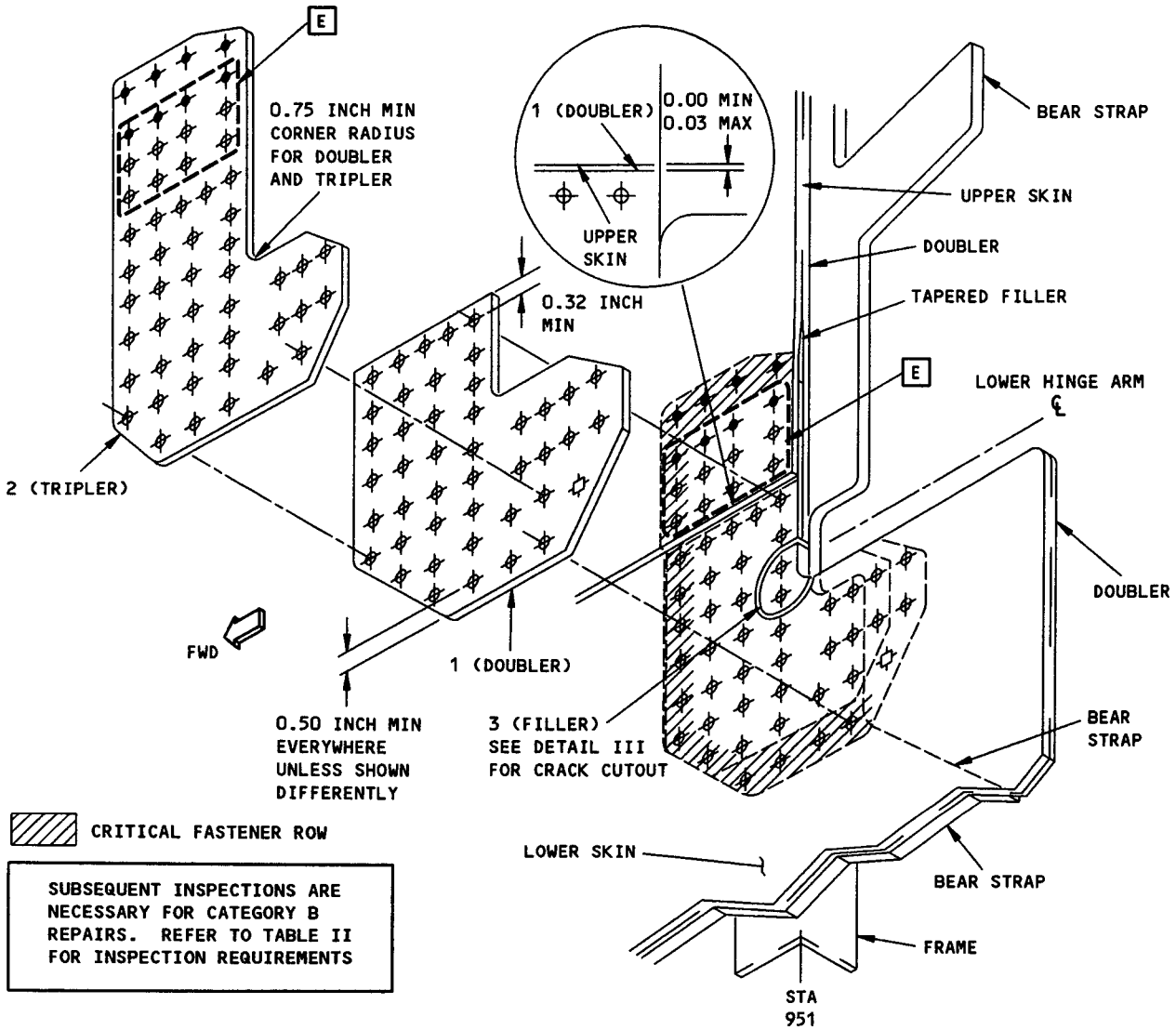

SUBSEQUENT INSPECTIONS ARE NECESSARY FOR CATEGORY B REPAIRS. REFER TO TABLE II FOR INSPECTION REQUIREMENTS

LOWER HINGE REPAIR
DETAIL II

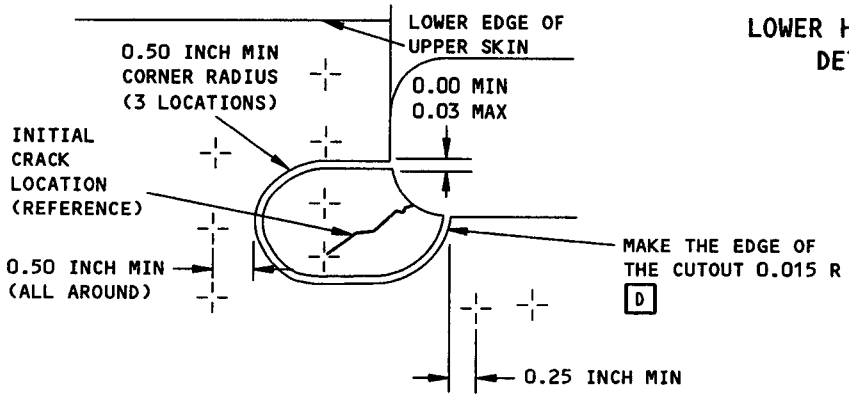

SKIN CRACK CUTOUT B
DETAIL III

Skin and Doubler Repair - Aft Entry Door Lower Hinge Cutout
Figure 34 (Sheet 4)

BOEING PROPRIETARY - Copyright © - Unpublished Work - See title page for details.

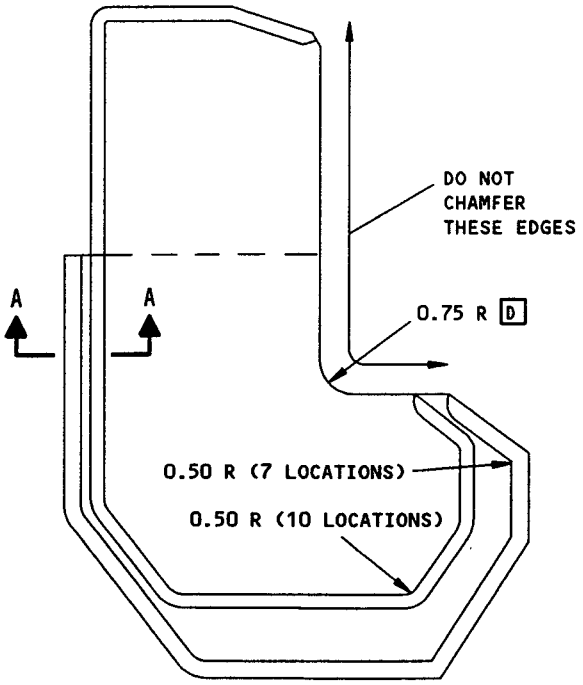

DETAIL IV

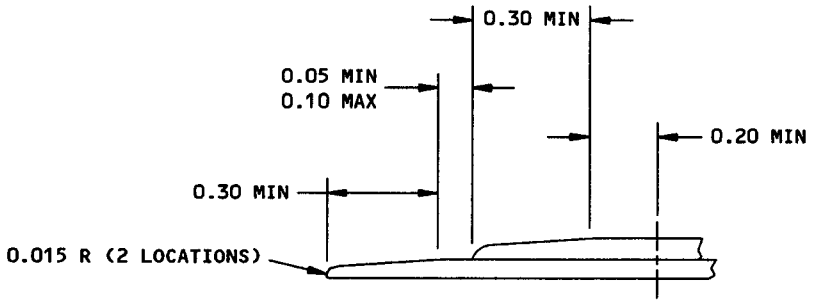

SECTION A-A

Skin and Doubler Repair - Aft Entry Door Lower Hinge Cutout
Figure 34 (Sheet 5)

BOEING PROPRIETARY - Copyright © - Unpublished Work - See title page for details.

CATEGORY B REPAIR AND SSI F-17A INSPECTION REQUIREMENTS			
INSPECTION THRESHOLD	REPEAT INSPECTION ALTERNATIVES		
	METHOD	INTERVAL	REFERENCES
G	DETAILED VISUAL	4,000 FLIGHT CYCLES	
	MEDIUM FREQUENCY EDDY CURRENT (MFEC)	15,000 FLIGHT CYCLES	737 NDT, PART 6, 53-30-00, FIG. 6
	DETAILED VISUAL		

NOTE:
1) AT EVERY 4,000 FLIGHT CYCLES:
- DO A DETAILED VISUAL INSPECTION OF THE UPPER AND LOWER SKINS EXTERNALLY AROUND THE PART 1 DOUBLER AND PART 2 TRIPLER AS SHOWN IN DETAIL V.

2) AT EVERY 15,000 FLIGHT CYCLES:
- DO AN MFEC INSPECTION OF THE BEARSTRAP INTERNALLY (OR EXTERNALLY) AT THE UPPER ROW AND INTERNALLY AT THE LOWER ROW OF THE REPAIR PART AS SHOWN IN DETAIL V.
- DO A DETAILED VISUAL INSPECTION OF THE FRAME WEB INTERNALLY AS SHOWN IN DETAIL V.

TABLE II

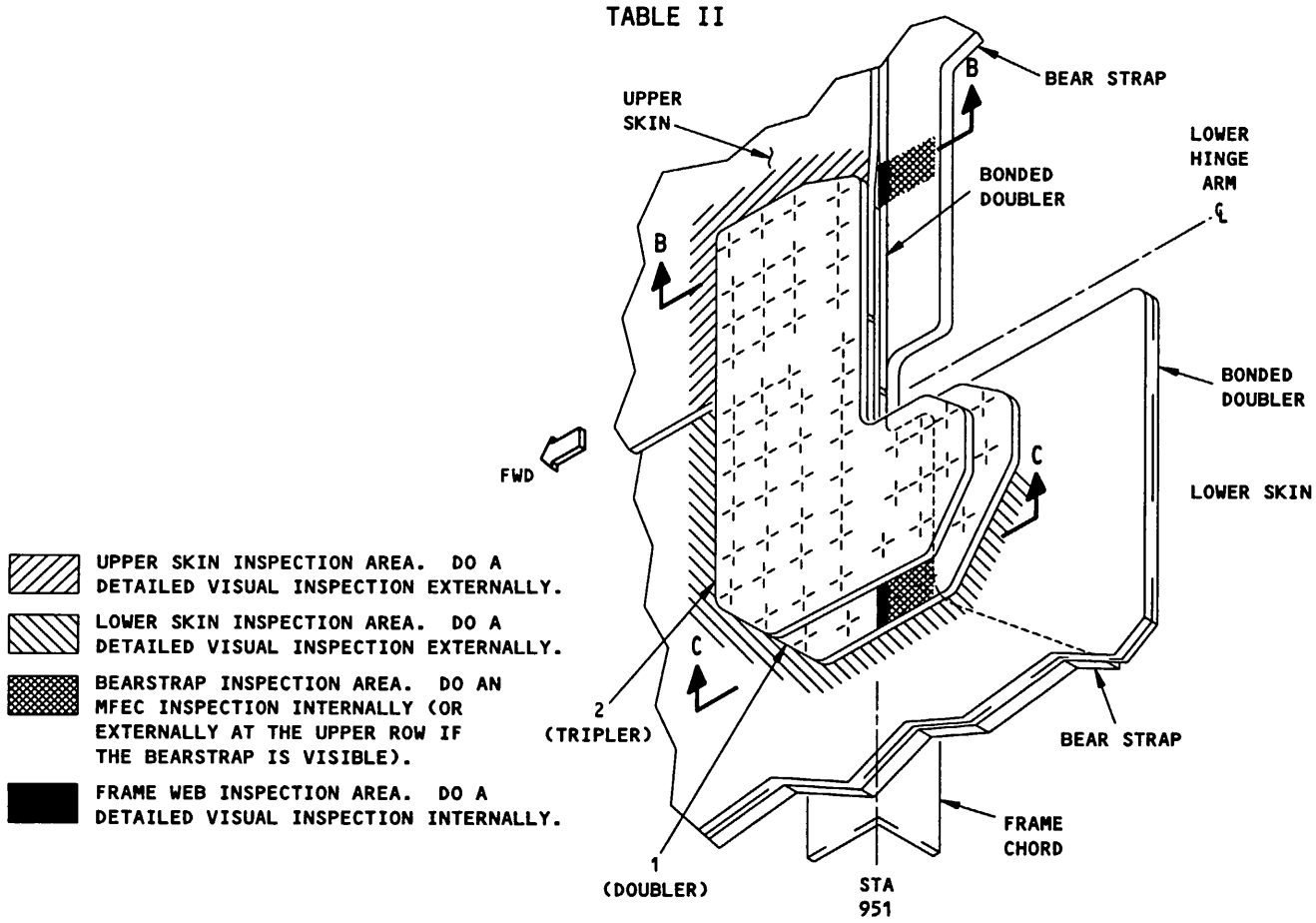

INSPECTION AREA FOR DETAIL II
DETAIL V
Skin and Doubler Repair - Aft Entry Door Lower Hinge Cutout
Figure 34 (Sheet 6)

BOEING PROPRIETARY - Copyright © - Unpublished Work - See title page for details.

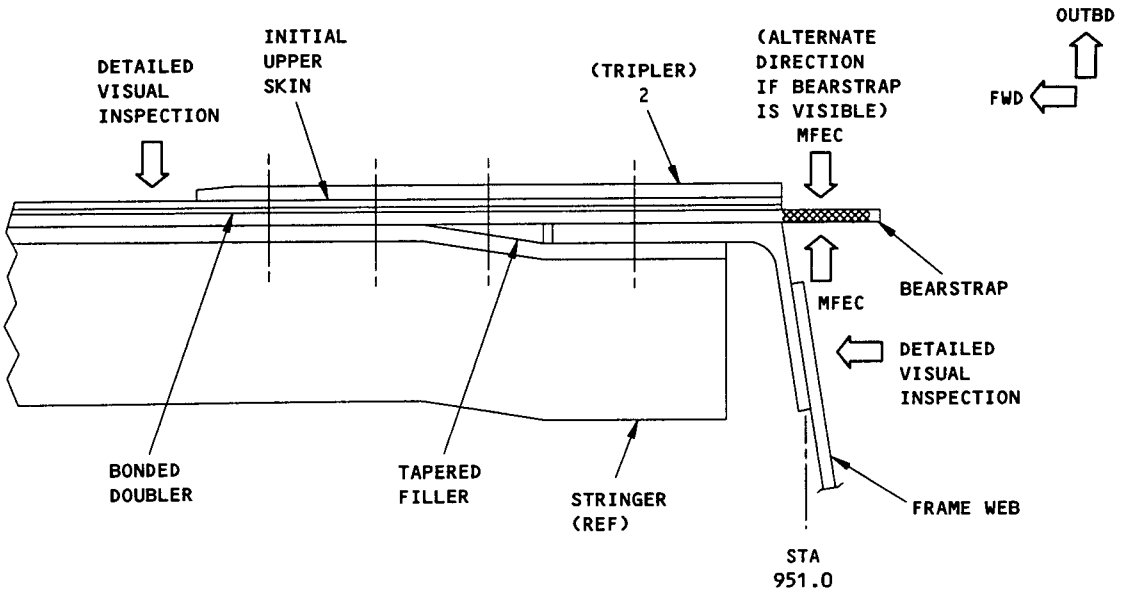

SECTION B-B

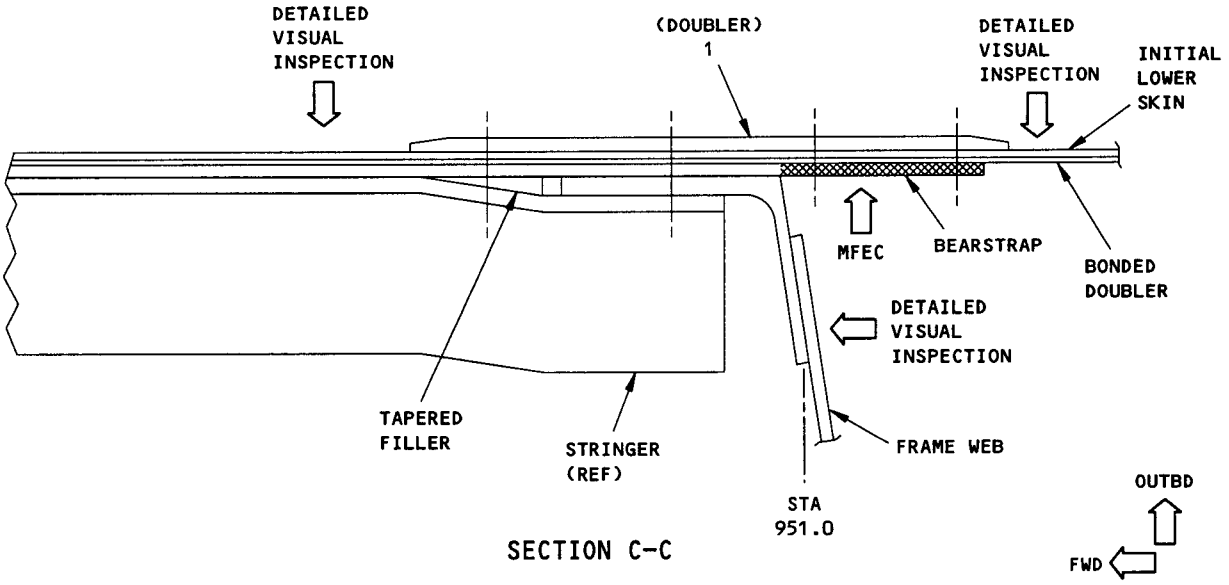

SECTION C-C

Skin and Doubler Repair - Aft Entry Door Lower Hinge Cutout
Figure 34 (Sheet 7)

BOEING PROPRIETARY - Copyright © - Unpublished Work - See title page for details.

SSI NUMBER F-17C INSPECTION REQUIREMENTS			
INSPECTION THRESHOLD	REPEAT INSPECTION		
	METHOD	INTERVAL	REFERENCE
66,000 FLIGHT CYCLES AFTER AIRPLANE DELIVERY [F]	HIGH FREQUENCY EDDY CURRENT (HFEC)	24,000 FLIGHT CYCLES	737 NDT, D6-37239, PART 6, 51-00-00, FIG. 4 OR 23
NOTE: INSPECT THE FRAME CHORD WITH HFEC METHOD INTERNALLY IN THE REPAIR AREA AS SHOWN IN DETAIL VI. IN ADDITION, INSPECT THE SKIN, BEARSTRAP, FRAMES AND SILLS PER THE EXISTING INTERNAL INSPECTIONS GIVEN IN THE 737 SSID DOCUMENT FOR F-17C.			

TABLE III

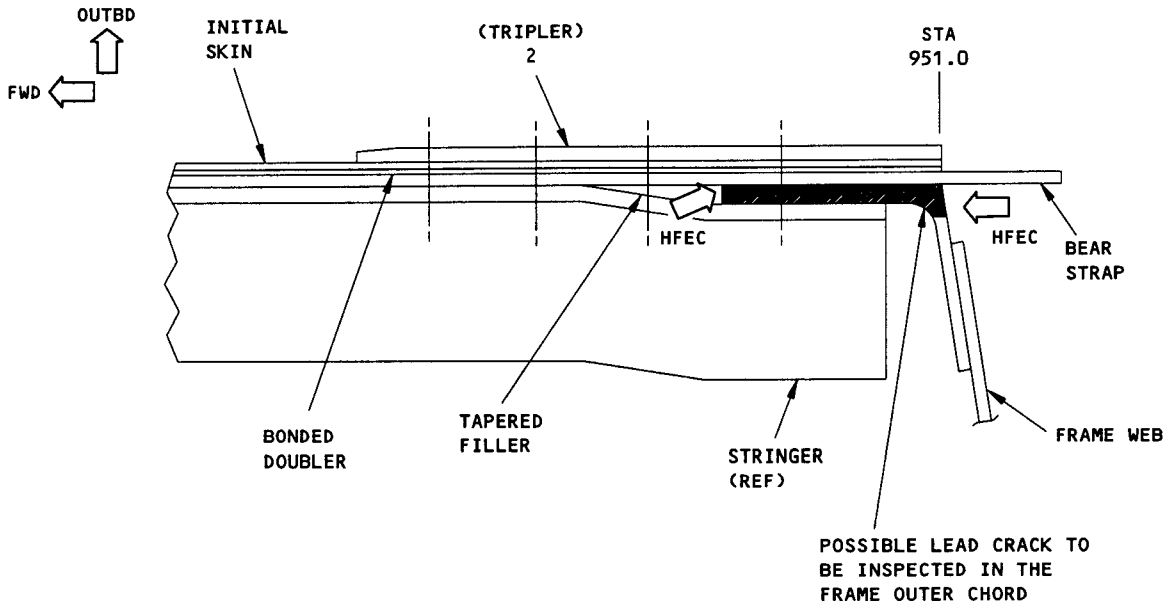

INSPECTION AREA FOR F-17C (TYPICAL)
DETAIL VI

Skin and Doubler Repair - Aft Entry Door Lower Hinge Cutout
Figure 34 (Sheet 8)

BOEING PROPRIETARY - Copyright © - Unpublished Work - See title page for details.

APPLICABILITY

THIS REPAIR APPLIES TO AIRPLANES WITH CUM LINE NUMBERS FROM 1015 AND ON THAT HAVE A CRACK IN THE SKIN AND/OR BONDED DOUBLER ONLY; IT DOES NOT APPLY TO CRACKS IN THE BEAR STRAP.

CONTACT BOEING BEFORE YOU DO A REPAIR:

- IF THE DAMAGE IS LARGER THAN THE PERMITTED CUTOUT. THE MAXIMUM PERMITTED CUTOUT IS SHOWN IN DETAIL V
- IF THERE IS DELAMINATION BETWEEN THE SKIN AND THE DOUBLER
- IF THE BEAR STRAP IS CRACKED. SEE DETAIL I FOR THE LOCATION OF THE BEAR STRAP.

REPAIR INSTRUCTIONS

PART I - TRIM OFF THE UPPER SKIN TAB

1. Remove the fasteners as necessary to trim off the tab in the upper skin panel. See Detail II.
2. Move the upper skin panel apart from the lower skin. Put a piece of thin steel sheet between them to protect the lower skin.
3. Carefully cut off the upper skin panel tab. Make the cut continuous with the skin edge forward of the skin tab. Do not damage the lower skin. See Detail II.
4. Remove all nicks, scratches, gouges, burrs, and sharp edges from the cut edge of the skin. Make the skin edge have a finish of 125 microinches R_a.
5. Apply a chemical conversion coating to the cut edge of the skin. Refer to SRM 51-10-2.
6. Apply one layer of BMS 10-79, Type II primer to the cut edge of the skin. Refer to SOPM 20-44-04.
7. Apply BMS 5-95 sealant to all of the faying surfaces of the skin.
8. Install the fasteners shown in Detail III. Install the bolts wet with BMS 5-95 sealant in a transition fit hole. Install the rivets without sealant.

PART II - REPAIR THE CRACK IN THE LOWER SKIN

1. Remove the fasteners from the repair area.
2. Move the skin and the doubler apart from the bear strap. Put a piece of thin steel sheet between the bear strap and the skin to protect the bear strap.

   CAUTION: BEFORE YOU INSTALL THE REPAIR, YOU MUST INSPECT THE SKIN UNDER AND AROUND THE REPAIR AREA FOR SIGNS OF CORROSION OR DISBONDING.
3. Carefully cut out the skin or the skin and the doubler. Do not damage the structure below the skin and the doubler. See Detail V.
4. Do a high frequency eddy current test along the edge of the cutout area to make sure there are no cracks. If there are no cracks, make the cutout larger by 0.04. Refer to NDT Part 6, 51-00-00, Fig. 4 for the high frequency eddy current procedure. Do a penetrant inspection of the exposed surfaces of the bearstrap.
5. Make the repair parts. See Details II and IV and Table I. Make the repair doubler fit the contour of the skin.
6. Assemble the repair parts.
7. Drill the fastener holes. See Detail IV. E
8. Remove the repair parts.
9. Remove all nicks, scratches, gouges, burrs, and sharp edges from the repair parts and the skin. Make the 0.75 radius of the repair doubler and tripler, and the edge of the crack cutout have a finish of 63 microinches R_a.

   All other machined surfaces must have a finish of 125 microinches R_a.
10. Apply a chemical conversion coating to the repair doubler, the filler, and to the bare surfaces of the skin. Refer to SRM 51-10-2.
11. Apply cadmium plating to the repair tripler. Refer to SRM 51-10-2.
12. Apply two layers of BMS 10-79, Type II primer to the repair tripler. Apply one layer of BMS 10-79, Type II primer to the repair doubler, the filler, and the bare surfaces of the skin. Refer to SOPM 20-44-04.
13. Install the repair washers in the countersink holes in the skin panel. Install them with BMS 5-95 sealant. Refer to SRM 51-30-8.
14. Install the repair parts with BMS 5-95 sealant on all of the faying surfaces.
15. Shim all gaps greater than 0.01 before you install the fasteners.
16. Install the hex drive bolts wet with BMS 5-95 sealant in close reamed holes.
17. Put BMS 5-95 aerodynamic smoother in the gap between the repair doubler and upper skin and between the filler and lower skin.
18. Apply a finish to the repair area. Refer to AMM 51-21.

Skin and Doubler Repair - Aft Galley Door Lower Hinge Cutout
Figure 35 (Sheet 1)

BOEING PROPRIETARY - Copyright © - Unpublished Work - See title page for details.

NOTES

- THIS REPAIR IS CATEGORY B. THE CATEGORY B REPAIR HAS FAA APPROVAL IF YOU DO THE SUPPLEMENTAL INSPECTIONS GIVEN IN TABLE II. INCORPORATION OF THESE INSPECTION REQUIREMENTS INTO THE AIRPLANE'S MAINTENANCE PROGRAM SATIFIES THE DAMAGE TOLERANCE ASSESSMENT OF THE REPAIR SPECIFIED BY THE REPAIR ASSESSMENT PROGRAM. THIS ASSESSMENT CAN BE DONE AFTER YOU RELEASE THE AIRPLANE TO SERVICE. REFER TO SRM 51-00-06 FOR GENERAL DATA ABOUT THE REPAIR ASSESSMENT PROGRAM. SEE DETAIL VII FOR THE INSPECTION AREA.

- THIS REPAIR WILL HAVE AN EFFECT ON THE STRUCTURALLY SIGNIFICANT ITEM (SSI):
  - NUMBER F-16A, B AND C, BUT THE SUPPLEMENTAL INSPECTIONS GIVE IN TABLE II WILL MEET THE SSID INSPECTION REQUIREMENTS FOR F-16A IN THE REPAIR AREA. HOWEVER, THE INTERNAL INSPECTION ALTERNATIVES FOR F-16B AND C ARE STILL APPLICABLE. ALSO, A NEW INSPECTION METHOD IS NECESSARY FOR THE EXTERNAL INSPECTIONS OF F-16C. SEE TABLE III FOR NEW REQUIREMENTS FOR F-16C.

  DO THE INTERNAL INSPECTIONS FOR F-16B AND C, IF NECESSARY, AT THE SUBSEQUENT SUPPLEMENTAL STRUCTURAL INSPECTION DOCUMENT (SSID) INSPECTION ON THIS AIRPLANE. REFER TO SRM 51-00-4, FIG. 3, FOR THE APPLICABLE SSI DATA.
- REFER TO FIG. 33 FOR AIRPLANES BEFORE CUM LINE NUMBER 1015.
- WHEN YOU USE THIS REPAIR REFER TO:
  - AMM 51-21 FOR INTERIOR AND EXTERIOR FINISHES
  - NDT PART 6, 51-00-00, FIG. 4 FOR HIGH FREQUENCY EDDY CURRENT PROCEDURES
  - SOPM 20-44-04 FOR APPLICATION OF URETHANE COMPATIBLE FINISHES
  - SRM 51-00-6 FOR REPAIR CATEGORIES, DEFINITIONS AND REPAIR ASSESSMENT PROGRAM DATA
  - SRM 51-10-1 FOR INSPECTION AND REMOVAL OF DAMAGE
  - SRM 51-10-2 FOR PROTECTIVE TREATMENT OF METALS
  - SRM 51-20-4 FOR REPAIR SEALING
  - SRM 51-30 FOR FASTENER CODE, REMOVAL, INSTALLATION, HOLE SIZES, EDGE MARGINS AND SUBSTITUTION
  - SRM 51-30-8 FOR COUNTERSINKING AND USE OF COUNTERSINK REPAIR WASHERS
  - SRM 51-70 FOR AERODYNAMIC SMOOTHNESS REQUIREMENTS
- ALL DIMENSIONS ARE IN INCHES, UNLESS SHOWN DIFFERENTLY.

[A] THE THICKNESS OF THE FILLER MUST BE EQUAL TO THE TOTAL THICKNESS OF THE SKIN, OR THE SKIN AND THE DOUBLER.

[B] THIS DETAIL SHOWS THE MAXIMUM PERMITTED CUTOUT. IF THE DAMAGE CANNOT BE REMOVED WITH THIS CUTOUT TELL THE BOEING COMPANY.

[C] THE THICKNESS OF THE DOUBLER MUST BE EQUAL TO THE THICKNESS OF THE UPPER SKIN ASSEMBLY.

[D] MAKE THE EDGE HAVE A FINISH OF 63 MICRO-INCHES Ra.

[E] WHEN YOU DRILL NEW FASTENER HOLES USE CARE NOT TO DRILL NEAR THE EDGE OF THE BEAR STRAP.

[F] IF THE AIRPLANE HAS LESS THAN 66,000 FLIGHT CYCLES, THE INSPECTION THRESHOLD IS THE EARLIER OF:

- THE INITIAL SCHEDULED INSPECTION AS GIVEN IN THE OPERATOR'S REPAIR ASSESSMENT PROGRAM (RAP)
- 66,000 FLIGHT CYCLES.

IF THE AIRPLANE HAS MORE THAN 66,000 FLIGHT CYCLES AND THE INITIAL SCHEDULED SUPPLEMENTAL STRUCTURAL INSPECTION DOCUMENT (SSID) INSPECTION HAS BEEN PERFORMED, THE INSPECTION THRESHOLD IS:

- THE NEXT SCHEDULED SSID INSPECTION FOR THE STRUCTURALLY SIGNIFICANT ITEM F-16A IN THE REPAIRED AREA.

[G] IF THE AIRPLANE HAS MORE THAN 66,000 FLIGHT CYCLES, DO THE NEW INSPECTION ALTERNATIVE AT THE SUBSEQUENT SCHEDULED SSID INSPECTION FOR F-16 ON THIS AIRPLANE.

Skin and Doubler Repair - Aft Galley Door Lower Hinge Cutout
Figure 35 (Sheet 2)

BOEING PROPRIETARY - Copyright © - Unpublished Work - See title page for details.

FASTENER SYMBOLS

- REFERENCE FASTENER LOCATION.
- INITIAL FASTENER LOCATION. INSTALL A BACR15CE6D() RIVET IN A 0.190-0.198 INCH DIAMETER HOLE. IF THE HOLE IS DAMAGED YOU CAN INSTALL A BACR15DS7D() 1/32 INCH OVERSIZE RIVET IN A 0.223-0.231 INCH DIAMETER HOLE.
- INTIAL FASTENER LOCATION. INSTALL A BACB30FQ6A HEX DRIVE BOLT WITH A BACC30M COLLAR (1/64 OVERSIZE). IF THE FASTENER HOLE GETS DAMAGED, YOU CAN USE A 1/32 OVERSIZE BACB30KF6A HEX DRIVE BOLT WITH A BACC30R COLLAR.
- INITIAL FASTENER LOCATION. INSTALL A BACB30FM8A HEX DRIVE BOLT WITH A BACC30M COLLAR.
- REPAIR FASTENER LOCATION. INSTALL A BACB30FN6A HEX DRIVE BOLT WITH A BACC30M COLLAR. [E]

REPAIR PARTS			
PART		QTY	MATERIAL
1	DOUBLER	1	CLAD 2024-T3 [C]
2	TRIPLER	1	0.063 INCH CRES 1/2 HARD 301 (AS SPECIFIED IN MIL-S-5059)
2	SHIM	1	CLAD 2024-T3 [A]

TABLE I

Skin and Doubler Repair - Aft Galley Door Lower Hinge Cutout
Figure 35 (Sheet 3)

BOEING PROPRIETARY - Copyright © - Unpublished Work - See title page for details.

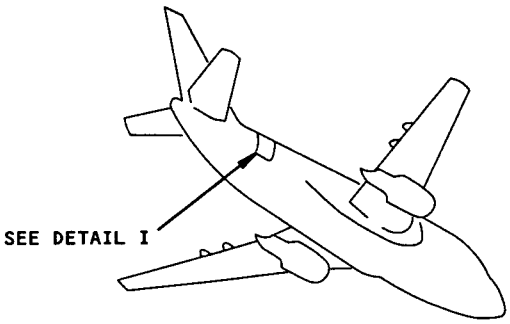

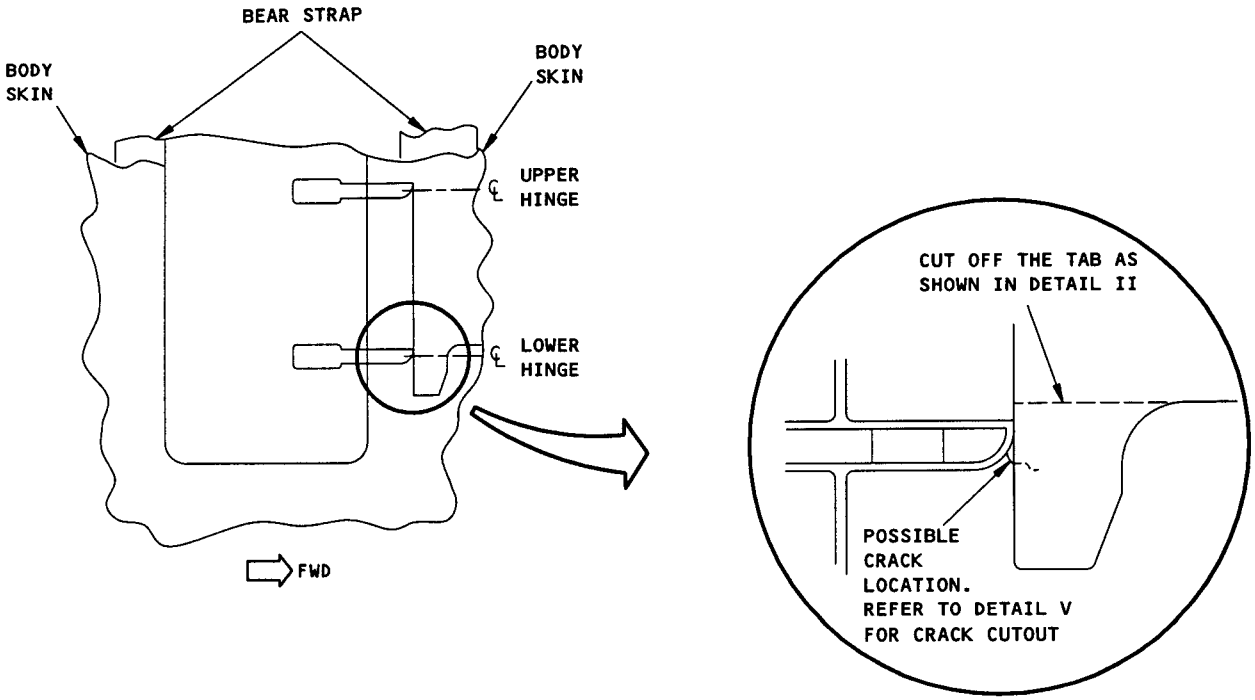

AFT GALLEY DOOR LOWER HINGE
DETAIL I

Skin and Doubler Repair - Aft Galley Door Lower Hinge Cutout
Figure 35 (Sheet 4)

BOEING PROPRIETARY - Copyright © - Unpublished Work - See title page for details.

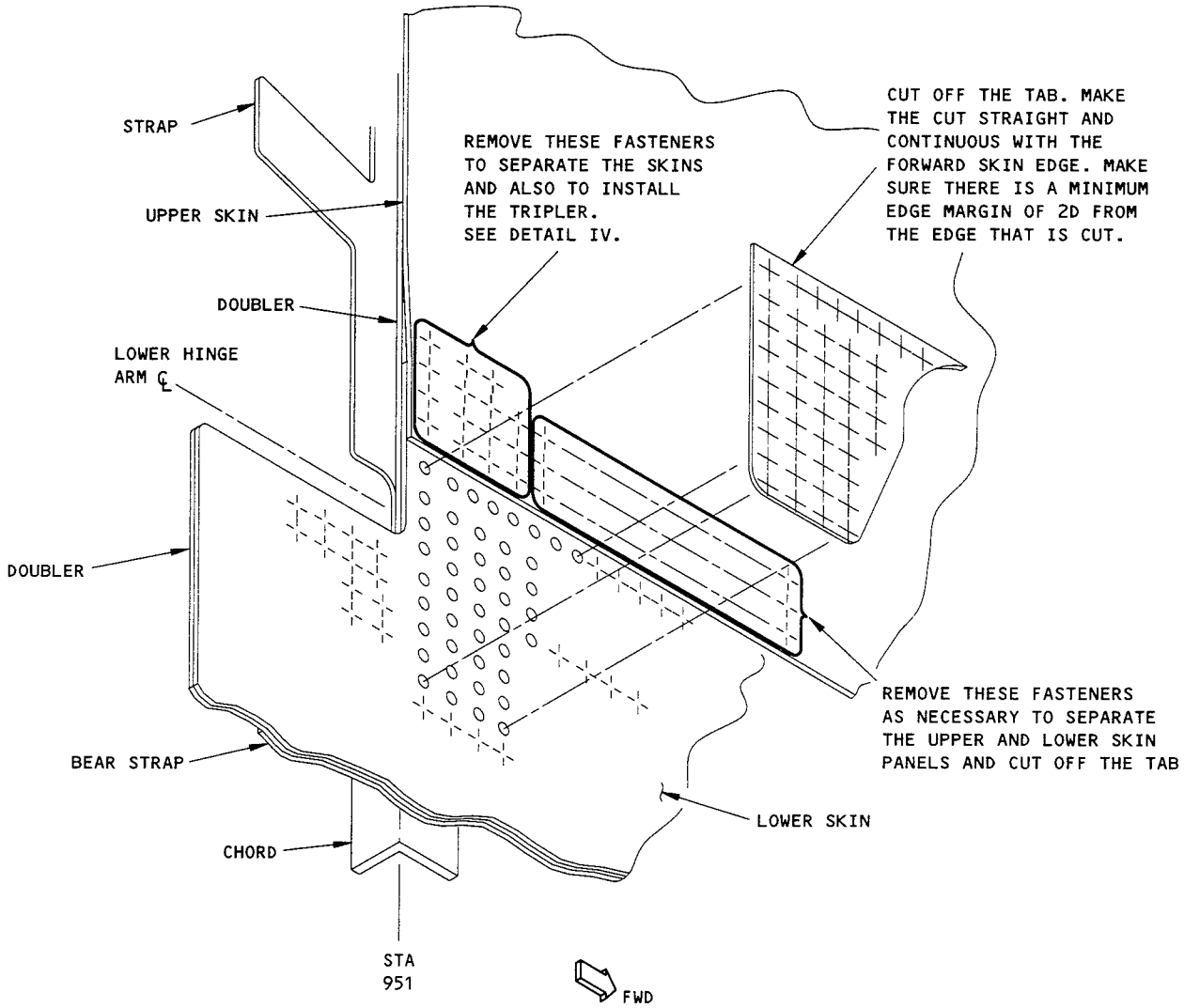

DETAIL II
CUT OFF THE UPPER SKIN PANEL TAB

Skin and Doubler Repair - Aft Galley Door Lower Hinge Cutout
Figure 35 (Sheet 5)

BOEING PROPRIETARY - Copyright © - Unpublished Work - See title page for details.

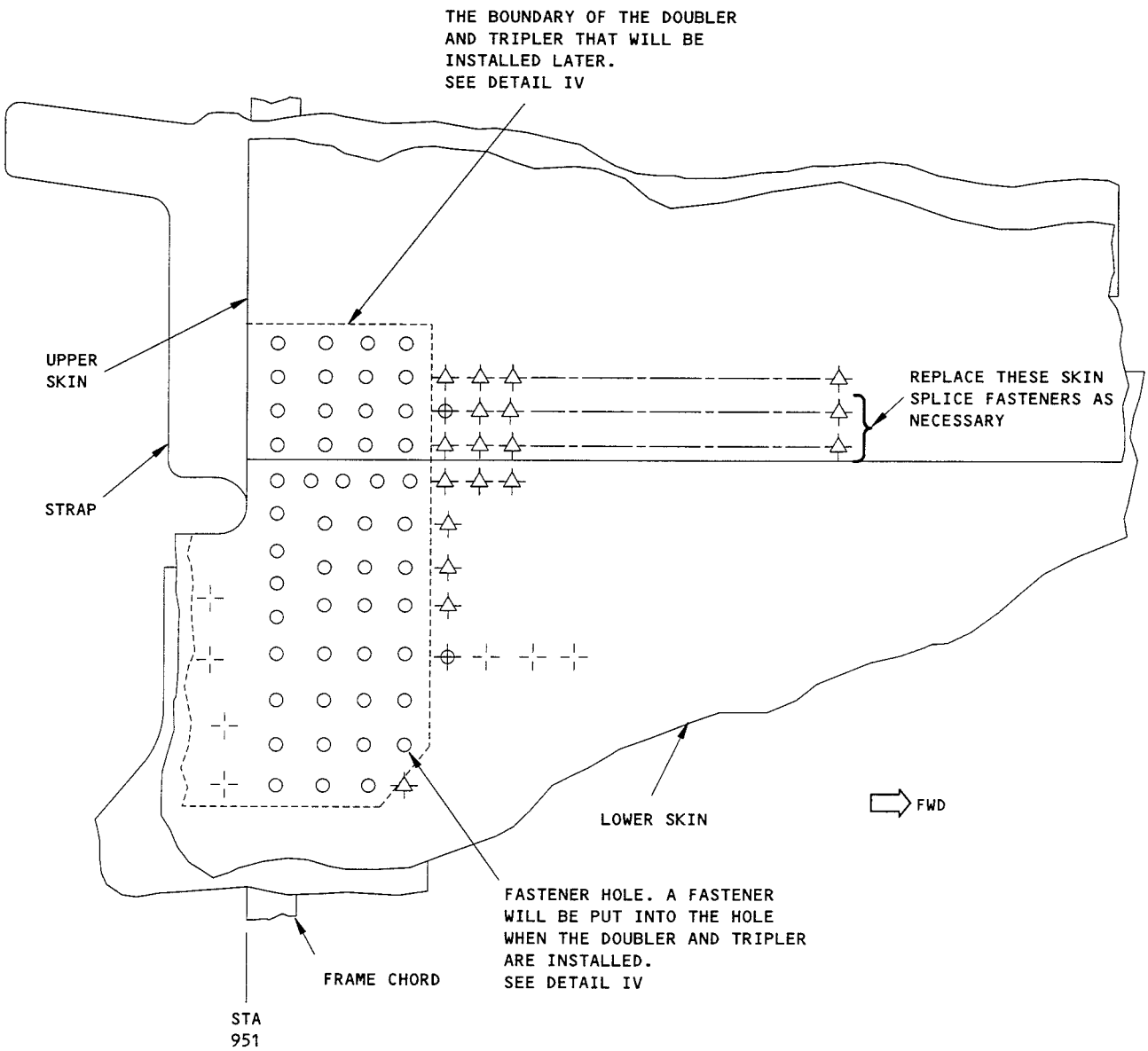

DETAIL III
REPLACING FASTENERS

Skin and Doubler Repair - Aft Galley Door Lower Hinge Cutout
Figure 35 (Sheet 6)

BOEING PROPRIETARY - Copyright © - Unpublished Work - See title page for details.

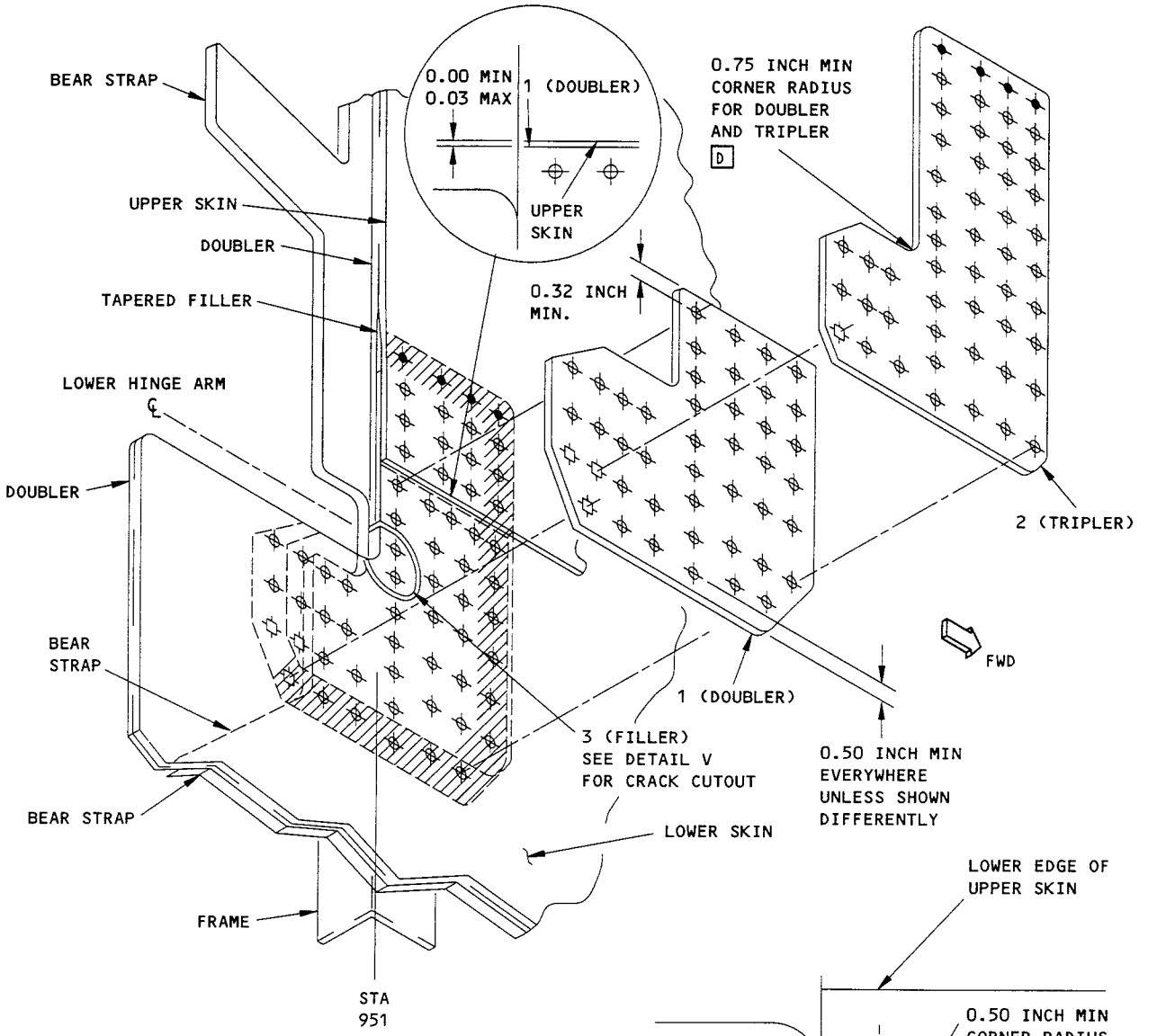

LOWER HINGE REPAIR
DETAIL IV

CRITICAL FASTENER ROW

SUBSEQUENT INSPECTIONS ARE NECESSARY FOR CATEGORY B REPAIRS. REFER TO TABLE II FOR INSPECTION REQUIREMENTS.

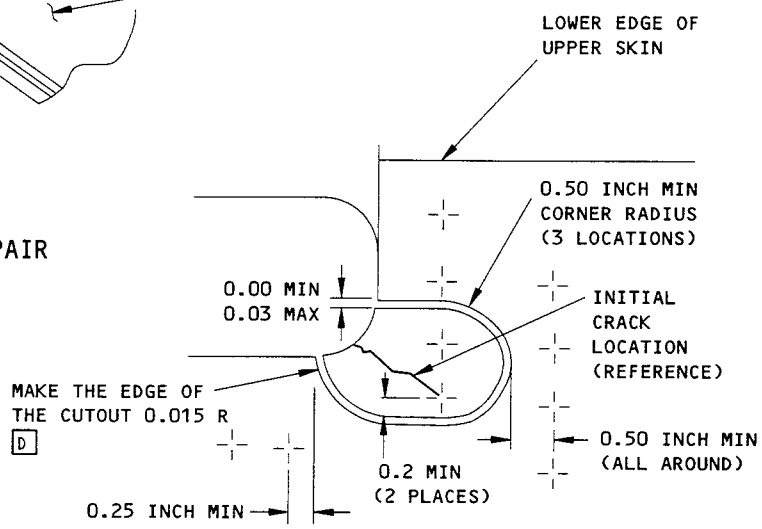

SKIN CRACK CUTOUT B
DETAIL V

Skin and Doubler Repair - Aft Galley Door Lower Hinge Cutout
Figure 35 (Sheet 7)

BOEING PROPRIETARY - Copyright © - Unpublished Work - See title page for details.

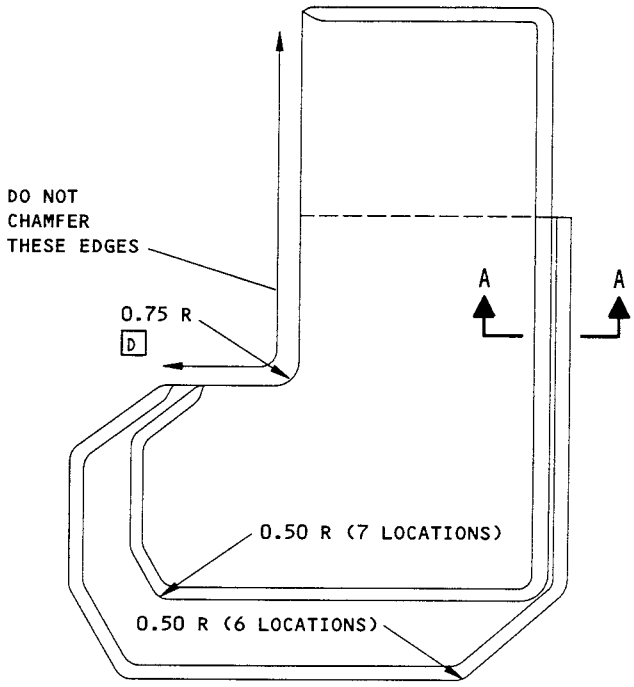

DETAIL VI

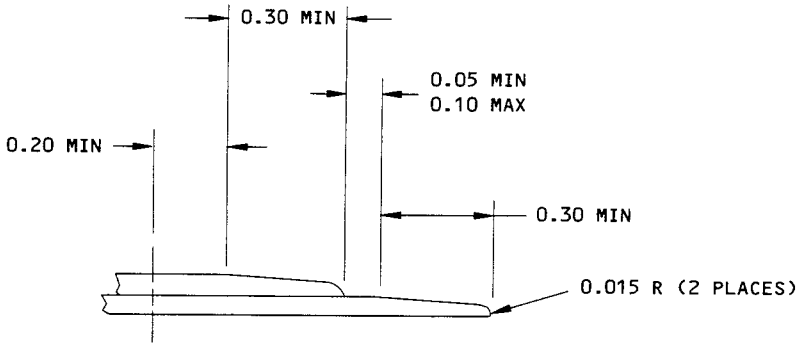

SECTION A-A

Skin and Doubler Repair - Aft Galley Door Lower Hinge Cutout
Figure 35 (Sheet 8)

BOEING PROPRIETARY - Copyright © - Unpublished Work - See title page for details.

CATEGORY B REPAIR AND SSI F-16A INSPECTION REQUIREMENTS			
INSPECTION THRESHOLD	REPEAT INSPECTION ALTERNATIVES		
	METHOD	INTERVAL	REFERENCES
F	DETAILED VISUAL	4,000 FLIGHT CYCLES	
	MEDIUM FREQUENCY EDDY CURRENT (MFEC)	15,000 FLIGHT CYCLES	737 NDT, PART 6, 53-30-00, FIG. 6
	DETAILED VISUAL		

NOTE:
1) AT EVERY 4,000 FLIGHT CYCLES:
- DO A DETAILED VISUAL INSPECTION OF THE UPPER AND LOWER SKINS EXTERNALLY AROUND THE PART 1 DOUBLER AND PART 2 TRIPLER AS SHOWN IN DETAIL VII.

2) AT EVERY 15,000 FLIGHT CYCLES:
- DO AN MFEC INSPECTION OF THE BEARSTRAP INTERNALLY (OR EXTERNALLY) AT THE UPPER ROW AND INTERNALLY AT THE LOWER ROW OF THE REPAIR PART AS SHOWN IN DETAIL VII.
- DO A DETAILED VISUAL INSPECTION OF THE FRAME WEB INTERNALLY AS SHOWN IN DETAIL VII.

TABLE II

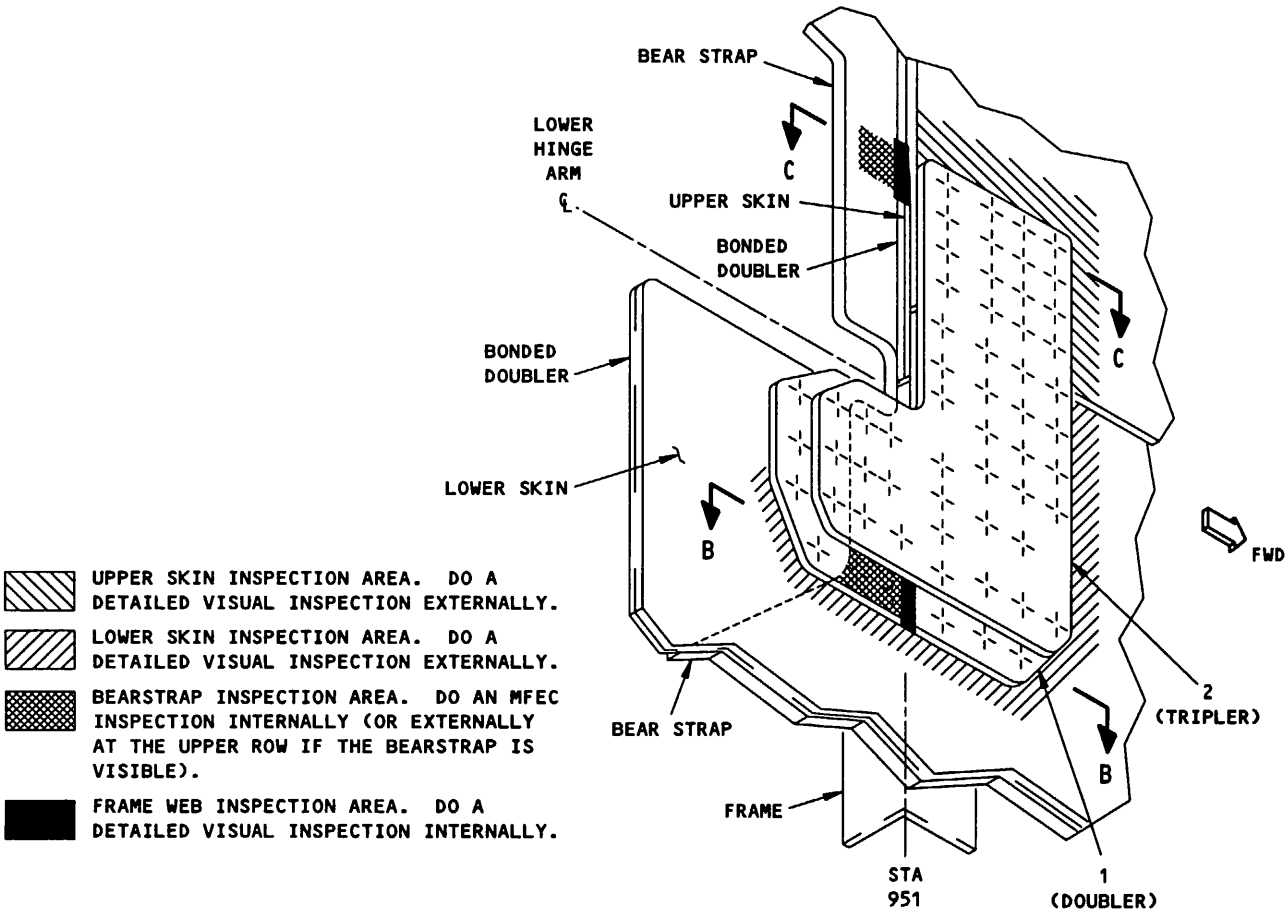

INSPECTION AREA FOR DETAIL IV
DETAIL VII
Skin and Doubler Repair - Aft Galley Door Lower Hinge Cutout
Figure 35 (Sheet 9)

BOEING PROPRIETARY - Copyright © - Unpublished Work - See title page for details.

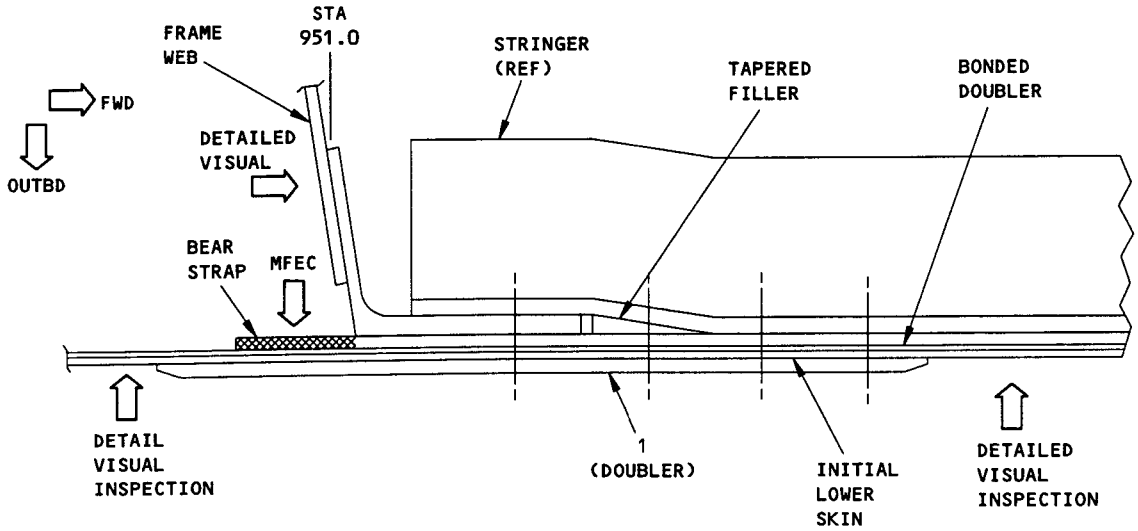

SECTION B-B

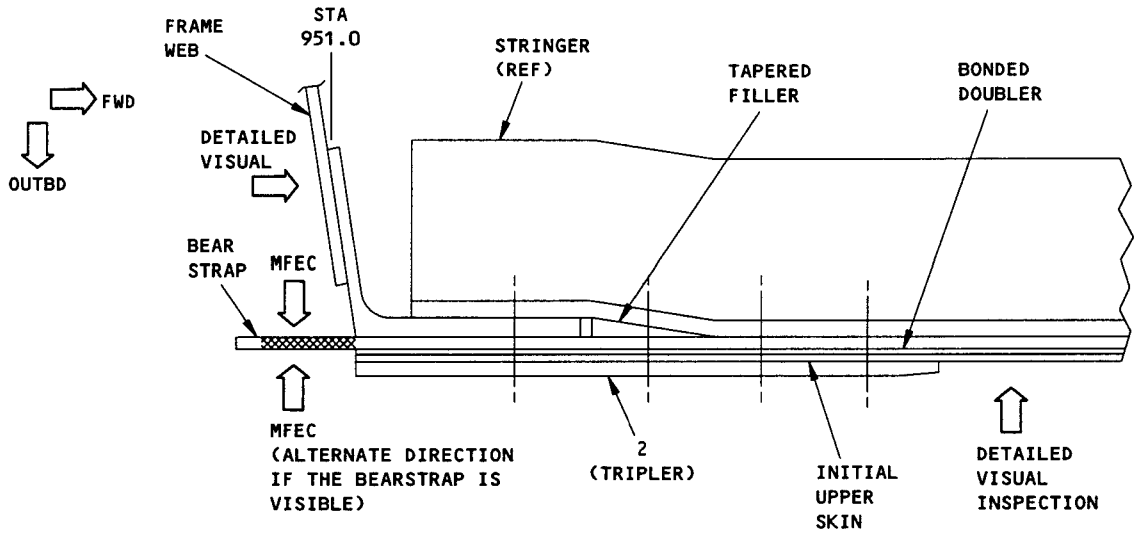

SECTION C-C

Skin and Doubler Repair - Aft Galley Door Lower Hinge Cutout
Figure 35 (Sheet 10)

BOEING PROPRIETARY - Copyright © - Unpublished Work - See title page for details.

SSI NUMBER F-16C INSPECTION REQUIREMENTS			
INSPECTION THRESHOLD	REPEAT INSPECTION		
	METHOD	INTERVAL	REFERENCE
66,000 FLIGHT CYCLES AFTER AIRPLANE DELIVERY G	HIGH FREQUENCY EDDY CURRENT (HFEC)	24,000 FLIGHT CYCLES	737 NDT, D6-37239, PART 6, 51-00-00, FIG. 4 OR 23
NOTE: INSPECT THE FRAME CHORD WITH HFEC METHOD INTERNALLY IN THE REPAIR AREA AS SHOWN IN DETAIL VIII. IN ADDITION, INSPECT THE SKIN, BEARSTRAP, FRAMES AND SILLS PER THE EXISTING INTERNAL INSPECTIONS GIVEN IN THE 737 SSID DOCUMENT FOR F-16C.			

TABLE III

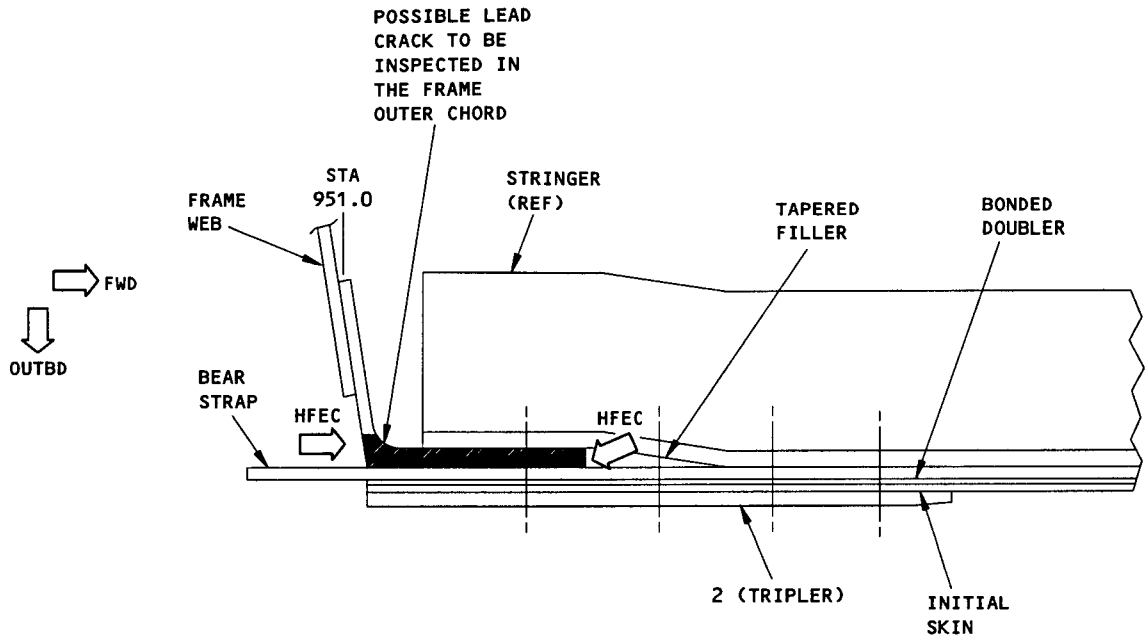

INSPECTION AREA FOR F-16C (TYPICAL)

DETAIL VIII

Skin and Bonded Doubler Repair - Aft Galley Door Lower Hinge Cutout
Figure 35 (Sheet 11)

BOEING PROPRIETARY - Copyright © - Unpublished Work - See title page for details.

APPLICABILITY

THIS REPAIR APPLIES TO AIRPLANES WITH CUM LINE NUMBERS FROM 1015 AND ON THAT HAVE A CRACK IN THE SKIN AND/OR BONDED DOUBLER ONLY; IT DOES NOT APPLY TO CRACKS IN THE BEAR STRAP.

CONTACT BOEING BEFORE YOU DO A REPAIR:

- IF THE DAMAGE IS LARGER THAN THE PERMITTED CUTOUT. THE MAXIMUM PERMITTED CUTOUT IS SHOWN IN DETAIL V
- IF THERE IS DELAMINATION BETWEEN THE SKIN AND THE DOUBLER
- IF THE BEAR STRAP IS CRACKED. SEE DETAIL I FOR THE LOCATION OF THE BEAR STRAP.

REPAIR INSTRUCTIONS

PART I - TRIM OFF THE UPPER SKIN TAB

1. Remove the fasteners as necessary to trim off the tab in the upper skin panel. See Detail II.
2. Move the upper skin panel apart from the lower skin. Put a piece of thin steel sheet between them to protect the lower skin.
3. Carefully cut off the upper skin panel tab. Make the cut continuous with the skin edge forward of the skin tab. Do not damage the lower skin. See Detail II.
4. Remove all nicks, scratches, gouges, burrs, and sharp edges from the cut edge of the skin. Make the skin edge have a finish of 125 microinches R_a.
5. Apply a chemical conversion coating to the cut edge of the skin. Refer to SRM 51-10-2.
6. Apply one layer of BMS 10-79, Type II primer to the cut edge of the skin. Refer to SOPM 20-44-04.
7. Apply BMS 5-95 sealant to all of the faying surfaces of the skin.
8. Install the fasteners shown in Detail III. Install the bolts wet with BMS 5-95 sealant in a transition fit hole. Install the rivets without sealant.

PART II - REPAIR THE CRACK IN THE LOWER SKIN

1. Remove the fasteners from the repair area.
2. Move the skin and the doubler apart from the bear strap. Insert a piece of thin steel sheet between the bear strap and the skin to protect the bear strap.

   CAUTION: BEFORE YOU INSTALL THE REPAIR, YOU MUST INSPECT THE SKIN UNDER AND AROUND THE REPAIR AREA FOR SIGNS OF CORROSION OR DISBONDING.
3. Carefully cut out the skin or the skin and the doubler. Do not damage the structure below the skin and the doubler. See Detail V.
4. Do a high frequency eddy current test along the edge of the cutout area to make sure there are no cracks. If there are no cracks, make the cutout larger by 0.04. Refer to NDT Part 6, 51-00-00, Fig. 4 for the high frequency eddy current procedure. Do a penetrant inspection of the exposed surface of the bearstrap.
5. Make the repair parts. See Details IV and VI and Table I. Make the repair doubler fit the contour of the skin.
6. Assemble the repair parts.
7. Drill the fastener holes. See Detail IV. E
8. Remove the repair parts.
9. Remove all nicks, scratches, gouges, burrs, and sharp edges from the repair parts and the skin. Make the 0.75 radius of the repair doubler and tripler, and the edge of the crack cutout have a finish of 63 microinches R_a.

   All other machined surfaces must have a finish of 125 microinches R_a.
10. Apply a chemical conversion coating to the repair doubler, the filler, and to the bare surfaces of the skin. Refer to SRM 51-10-2.
11. Apply cadmium plating to the repair tripler. Refer to SRM 51-10-2.
12. Apply two layers of BMS 10-79, Type II primer to the repair tripler. Apply one layer of BMS 10-79, Type II primer to the repair doubler, the filler, and the bare surfaces of the skin. Refer to SOPM 20-44-04.
13. Install the repair washers in the countersink holes in the skin panel. Install them with BMS 5-95 sealant. Refer to SRM 51-30-8.
14. Install the repair parts with BMS 5-95 sealant on all of the faying surfaces.
15. Before you install the fasteners, put shims in all gaps larger than 0.01.
16. Install the hex drive bolts wet with BMS 5-95 sealant in close reamed holes.
17. Put BMS 5-95 aerodynamic smoother in the gap between the repair doubler and the upper skin and between the filler and the lower skin.
18. Apply a finish to the repair area. Refer to AMM 51-21.

Skin and Doubler Repair - Aft Entry Door Lower Hinge Cutout
Figure 36 (Sheet 1)

BOEING PROPRIETARY - Copyright © - Unpublished Work - See title page for details.

NOTES

- THIS REPAIR IS CATEGORY B. THE CATEGORY B REPAIR HAS FAA APPROVAL IF YOU DO THE SUPPLEMENTAL INSPECTIONS GIVEN IN TABLE II. INCORPORATION OF THESE INSPECTION REQUIREMENTS INTO THE AIRPLANE'S MAINTENANCE PROGRAM SATIFIES THE DAMAGE TOLERANCE ASSESSMENT OF THE REPAIR SPECIFIED BY THE REPAIR ASSESSMENT PROGRAM. THIS ASSESSMENT CAN BE DONE AFTER YOU RELEASE THE AIRPLANE TO SERVICE. REFER TOSRM 51-00-6 FOR GENERAL DATA ABOUT THE REPAIR ASSESSMENT PROGRAM. SEE DETAIL VII FOR THE INSPECTION AREA.
- THIS REPAIR WILL HAVE AN EFFECT ON THE STRUCTURAL SIGNIFICANT ITEM (SSI):
  - NUMBER F-17A, B AND C WHEN INSTALLED AT THE AFT ENTRY DOOR CUTOUT WITHOUT AIRSTAIRS, BUT THE SUPPLEMENTAL INSPECTIONS GIVEN IN TABLE II WILL MEET THE SSID INSPECTION REQUIREMENTS FOR F-17A IN THE REPAIR AREA. HOWEVER, THE INTERNAL INSPECTION ALTERNATIVES FOR F-17B AND C ARE STILL APPLICABLE. ALSO, A NEW INSPECTION METHOD IS NECESSARY FOR THE EXTERNAL INSPECTIONS OF F-17C. SEE TABLE III FOR NEW REQUIREMENTS FOR F-17C IN THE REPAIR AREA.

  DO THE INTERNAL INSPECTIONS FOR F-17B AND C, IF NECESSARY, AT THE SUBSEQUENT SUPPLEMENTAL STRUCTURAL INSPECTION DOCUMENT (SSID) INSPECTION ON THIS AIRPLANE. REFER TO SRM 51-00-4, FIG. 3 FOR THE APPLICABLE SSI DATA.
- REFER TO FIG. 34 FOR AIRPLANES BEFORE CUM LINE NUMBER 1015.
- WHEN YOU USE THIS REPAIR REFER TO:
  - AMM 51-21 FOR INTERIOR AND EXTERIOR FINISHES
  - NDT PART 6, 51-00-00, FIG. 4 FOR HIGH FREQUENCY EDDY CURRENT PROCEDURES
  - SOPM 20-44-04 FOR APPLICATION OF URETHANE COMPATIBLE FINISHES
  - SRM 51-00-6 FOR REPAIR CATEGORIES, DEFINITIONS AND REPAIR ASSESSMENT PROGRAM DATA
  - SRM 51-10-1 FOR INSPECTION AND REMOVAL OF DAMAGES
  - SRM 51-10-2 FOR PROTECTIVE TREATMENT OF METALS
  - SRM 51-20-4 FOR REPAIR SEALING
  - SRM 51-30 FOR FASTENER CODE, REMOVAL, INSTALLATION, HOLE SIZES, EDGE MARGINS AND SUBSTITUTION
  - SRM 51-30-8 FOR COUNTERSINKING AND USE OF COUNTERSINK REPAIR WASHERS
  - SRM 51-70 FOR AERODYNAMIC SMOOTHNESS REQUIREMENTS.
- ALL DIMENSIONS ARE IN INCHES, UNLESS SHOWN DIFFERENTLY.

[A] THE THICKNESS OF THE FILLER MUST BE EQUAL TO THE TOTAL THICKNESS OF THE SKIN, OR THE SKIN AND THE DOUBLER.

[B] THIS DETAIL SHOWS THE MAXIMUM PERMITTED CUTOUT. IF THE DAMAGE CANNOT BE REMOVED WITH THIS CUTOUT TELL THE BOEING COMPANY.

[C] THE THICKNESS OF THE DOUBLER MUST BE EQUAL TO THE THICKNESS OF THE UPPER SKIN ASSEMBLY.

[D] MAKE THE EDGE HAVE A FINISH OF 63 MICRO-INCHES R_a.

[E] WHEN YOU DRILL NEW FASTENER HOLES USE CARE NOT TO DRILL NEAR THE EDGE OF THE BEAR STRAP.

[F] IF THE AIRPLANE HAS LESS THAN 66,000 FLIGHT CYCLES, THE INSPECTION THRESHOLD IS THE EARLIER OF:

- THE INITIAL SCHEDULED INSPECTION AS GIVEN IN THE OPERATOR'S REPAIR ASSESSMENT PROGRAM (RAP)
- 66,000 FLIGHT CYCLES.

IF THE AIRPLANE HAS MORE THAN 66,000 FLIGHT CYCLES AND THE INITIAL SCHEDULED SUPPLEMENTAL STRUCTURAL INSPECTION DOCUMENT (SSID) INSPECTION HAS BEEN PERFORMED, THE INSPECTION THRESHOLD IS:

- THE NEXT SCHEDULED SSID INSPECTION FOR THE STRUCTURALLY SIGNIFICANT ITEM F-17A IN THE REPAIRED AREA.

[G] IF THE AIRPLANE HAS MORE THAN 66,000 FLIGHT CYCLES, DO THE NEW INSPECTION ALTERNATIVE AT THE SUBSEQUENT SCHEDULED SSID INSPECTION FOR F-17 ON THIS AIRPLANE.

FASTENER SYMBOLS

REFERENCE FASTENER LOCATION.

INITIAL FASTENER LOCATION. INSTALL A BACR15CE6D() RIVET IN A 0.190-0.198 INCH DIAMETER HOLE. IF THE HOLE IS DAMAGED YOU CAN INSTALL A BACR15DS7D() 1/32 INCH OVERSIZE RIVET IN A 0.223-0.231 INCH DIAMETER HOLE.

INTIAL FASTENER LOCATION. INSTALL A BACB30FQ6A HEX DRIVE BOLT WITH A BACC30M COLLAR (1/64 OVERSIZE). IF THE FASTENER HOLE GETS DAMAGED, YOU CAN USE A 1/32 OVERSIZE BACB30KF6A HEX DRIVE BOLT WITH A BACC30R COLLAR.

INITIAL FASTENER LOCATION. INSTALL A BACB30FM8A HEX DRIVE BOLT WITH A BACC30M COLLAR.

REPAIR FASTENER LOCATION. INSTALL A BACB30FN6A HEX DRIVE BOLT WITH A BACC30M COLLAR. [E]

Skin and Doubler Repair - Aft Entry Door Lower Hinge Cutout
Figure 36 (Sheet 2)

BOEING PROPRIETARY - Copyright © - Unpublished Work - See title page for details.

REPAIR MATERIAL			
PART		QTY	MATERIAL
1	DOUBLER	1	CLAD 2024-T3 [C]
2	TRIPLER	1	0.063 INCH CRES 1/2 HARD 301 (AS SPECIFIED IN MIL-S-5059)
3	FILLER	1	CLAD 2024-T3 [A]

TABLE I

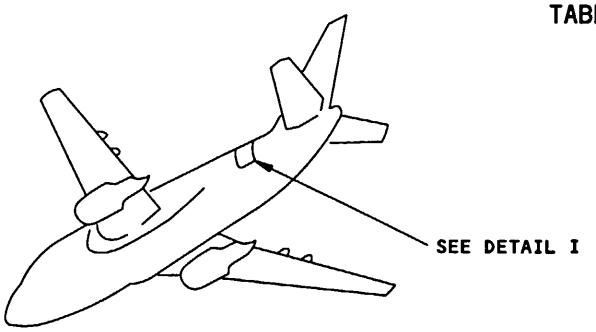

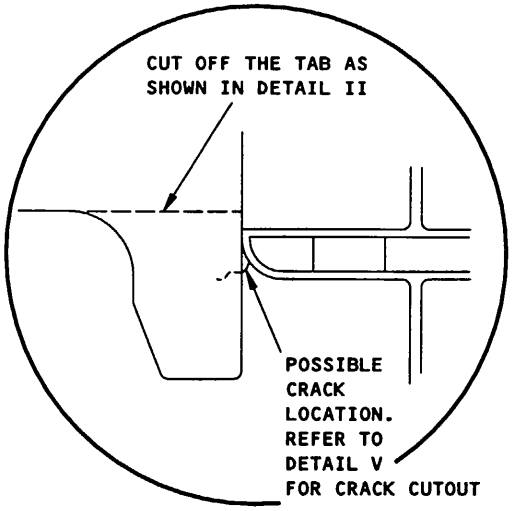

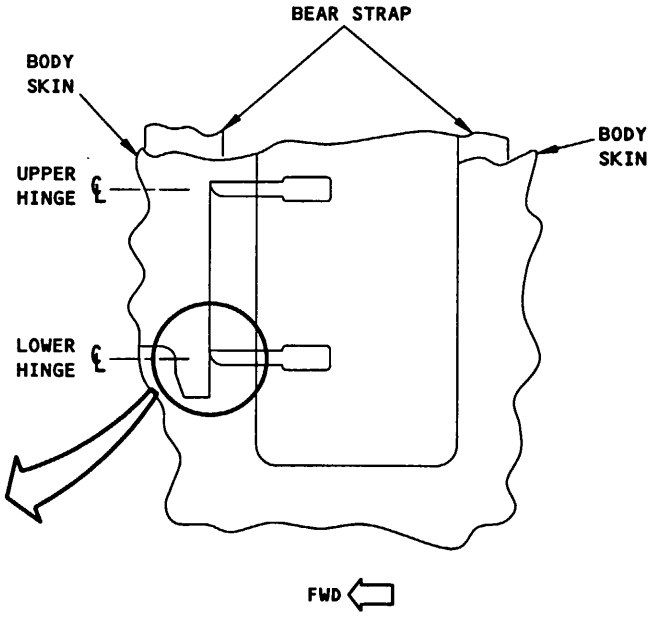

AFT ENTRY DOOR LOWER HINGE
DETAIL I

Skin and Doubler Repair - Aft Entry Door Lower Hinge Cutout
Figure 36 (Sheet 3)

BOEING PROPRIETARY - Copyright © - Unpublished Work - See title page for details.

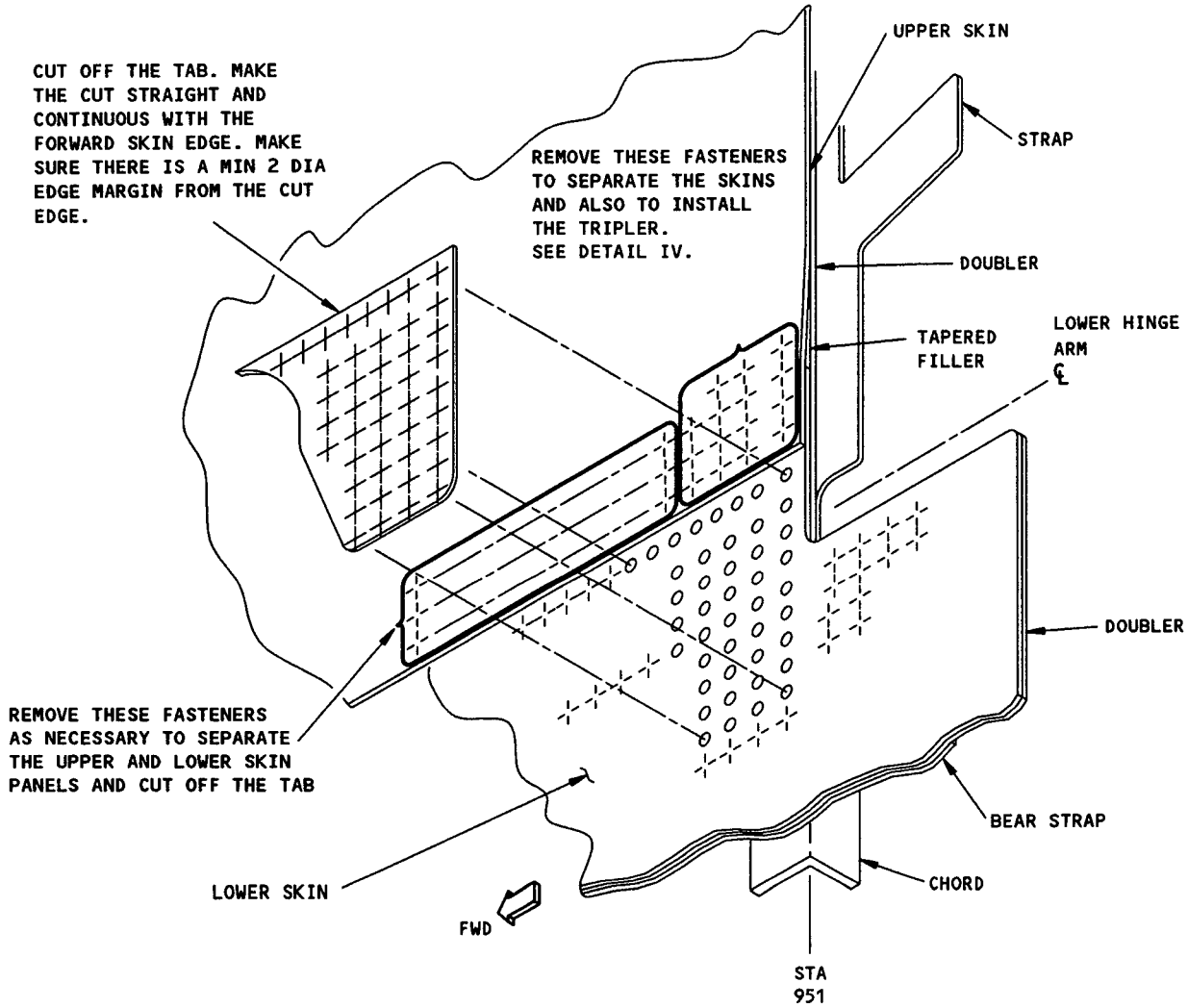

DETAIL II
CUT OFF THE UPPER SKIN PANEL TAB

Skin and Doubler Repair - Aft Entry Door Lower Hinge Cutout
Figure 36 (Sheet 4)

BOEING PROPRIETARY - Copyright © - Unpublished Work - See title page for details.

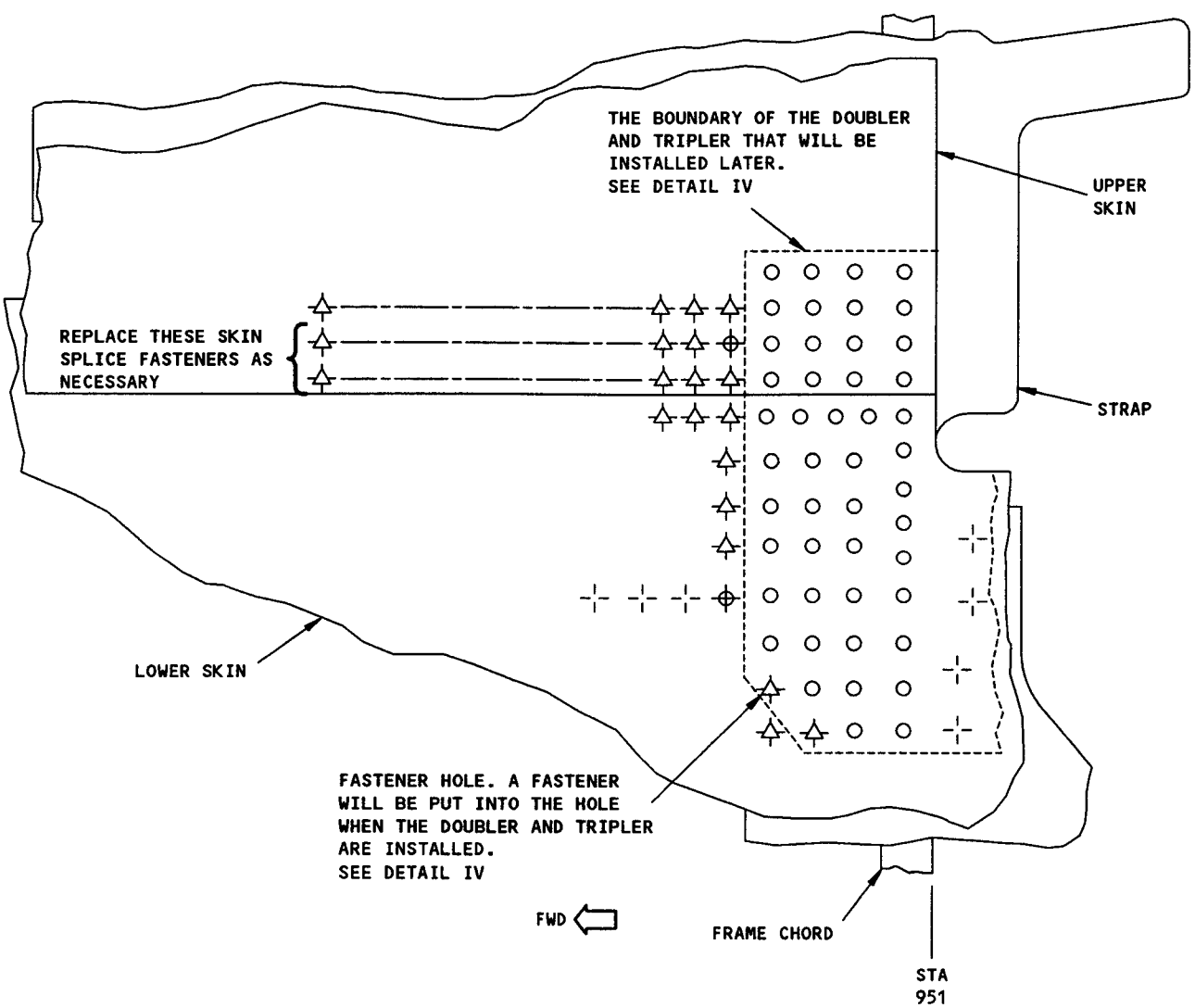

DETAIL III
REPLACING FASTENERS

Skin and Doubler Repair - Aft Entry Door Lower Hinge Cutout
Figure 36 (Sheet 5)

BOEING PROPRIETARY - Copyright © - Unpublished Work - See title page for details.

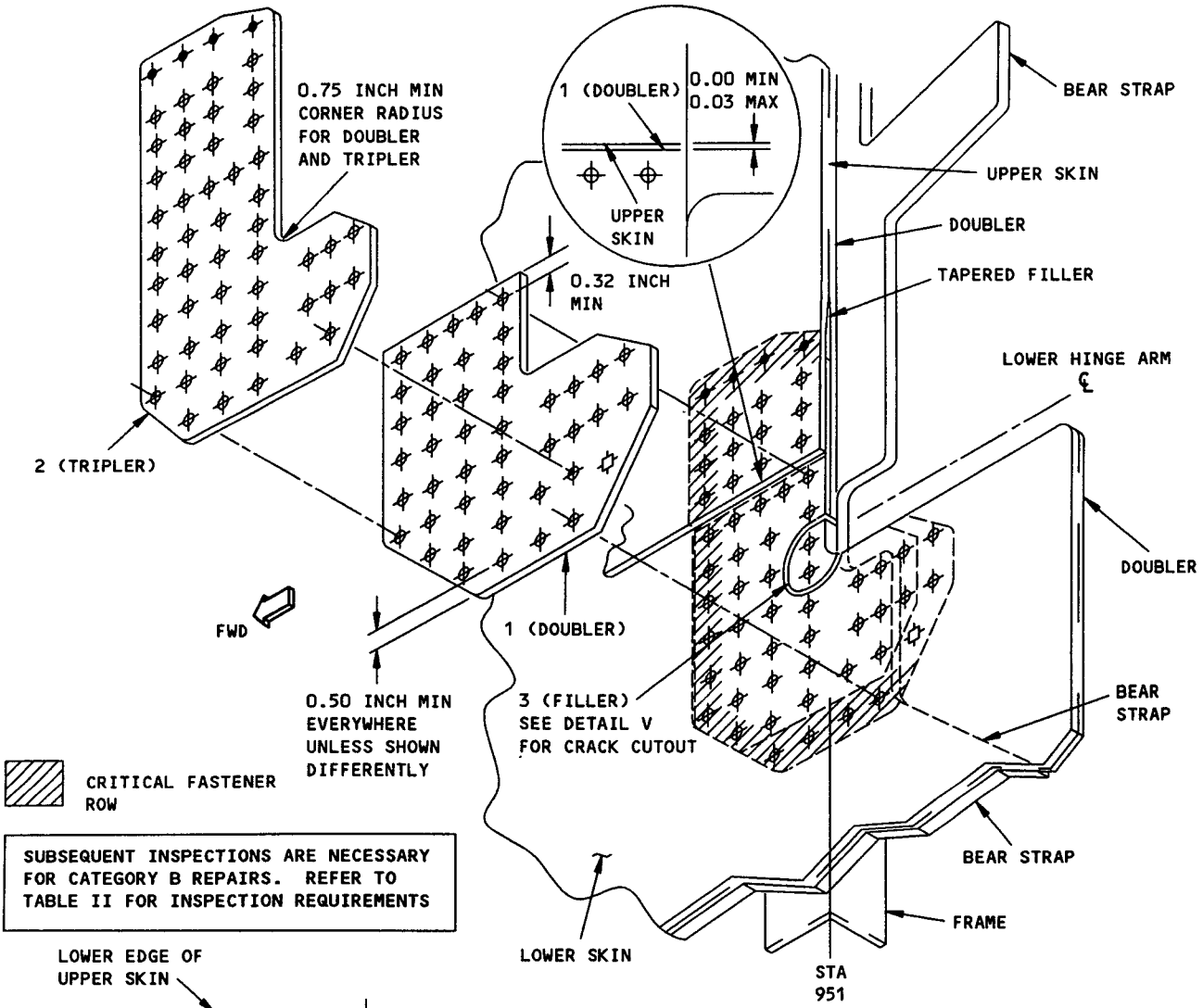

SUBSEQUENT INSPECTIONS ARE NECESSARY FOR CATEGORY B REPAIRS. REFER TO TABLE II FOR INSPECTION REQUIREMENTS

LOWER HINGE REPAIR
DETAIL IV

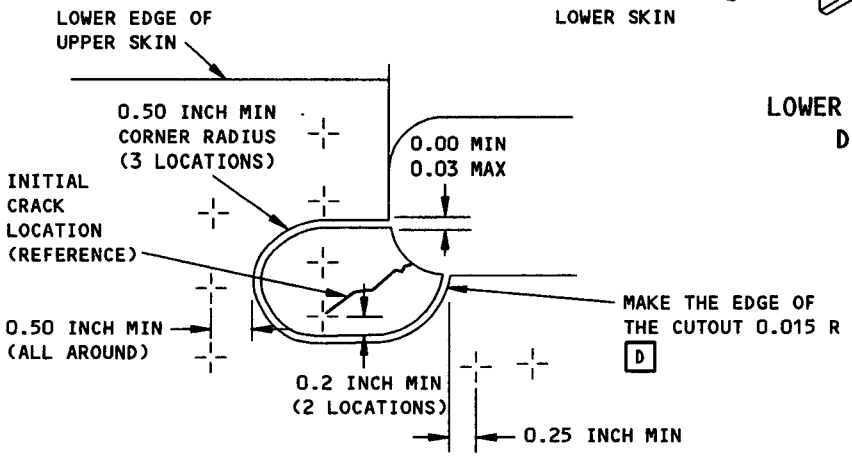

SKIN CRACK CUTOUT B
DETAIL V

Skin and Doubler Repair - Aft Entry Door Lower Hinge Cutout
Figure 36 (Sheet 6)

BOEING PROPRIETARY - Copyright © - Unpublished Work - See title page for details.

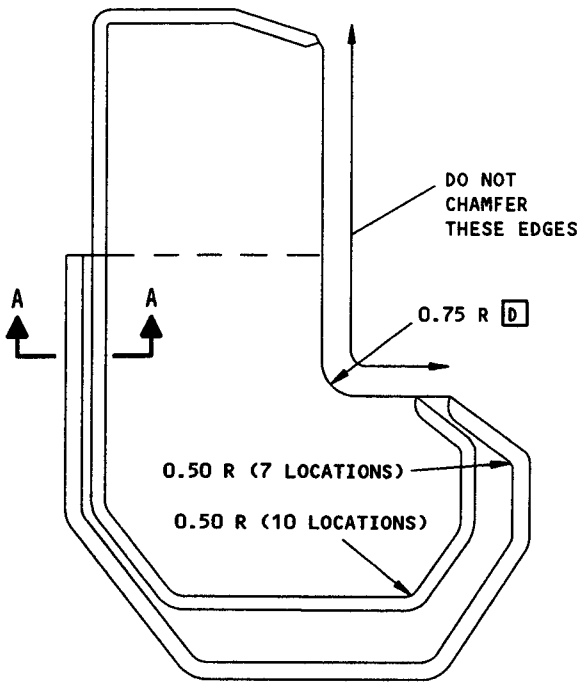

DETAIL VI

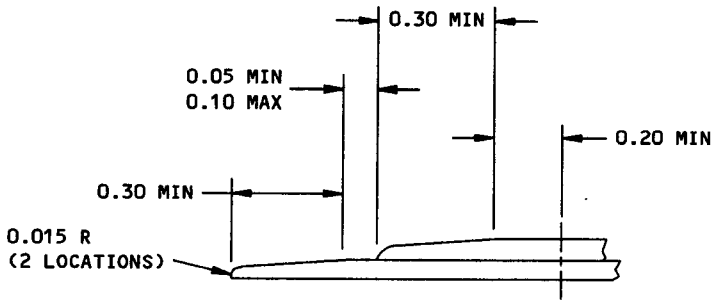

SECTION A-A

Skin and Doubler Repair - Aft Entry Door Lower Hinge Cutout
Figure 36 (Sheet 7)

BOEING PROPRIETARY - Copyright © - Unpublished Work - See title page for details.

CATEGORY B REPAIR AND SSI F-17A INSPECTION REQUIREMENTS			
INSPECTION THRESHOLD	REPEAT INSPECTION ALTERNATIVES		
	METHOD	INTERVAL	REFERENCES
F	DETAILED VISUAL	4,000 FLIGHT CYCLES	
	MEDIUM FREQUENCY EDDY CURRENT (MFEC)	15,000 FLIGHT CYCLES	737 NDT, PART 6, 53-30-00, FIG. 6
	DETAILED VISUAL		

NOTE:
1) AT EVERY 4,000 FLIGHT CYCLES:
- DO A DETAILED VISUAL INSPECTION OF THE UPPER AND LOWER SKINS EXTERNALLY AROUND THE PART 1 DOUBLER AND PART 2 TRIPLER AS SHOWN IN DETAIL VII.

2) AT EVERY 15,000 FLIGHT CYCLES:
- DO AN MFEC INSPECTION OF THE BEARSTRAP INTERNALLY (OR EXTERNALLY) AT THE UPPER ROW AND INTERNALLY AT THE LOWER ROW OF THE REPAIR PART AS SHOWN IN DETAIL VII.
- DO A DETAILED VISUAL INSPECTION OF THE FRAME WEB INTERNALLY AS SHOWN IN DETAIL VII.

TABLE II

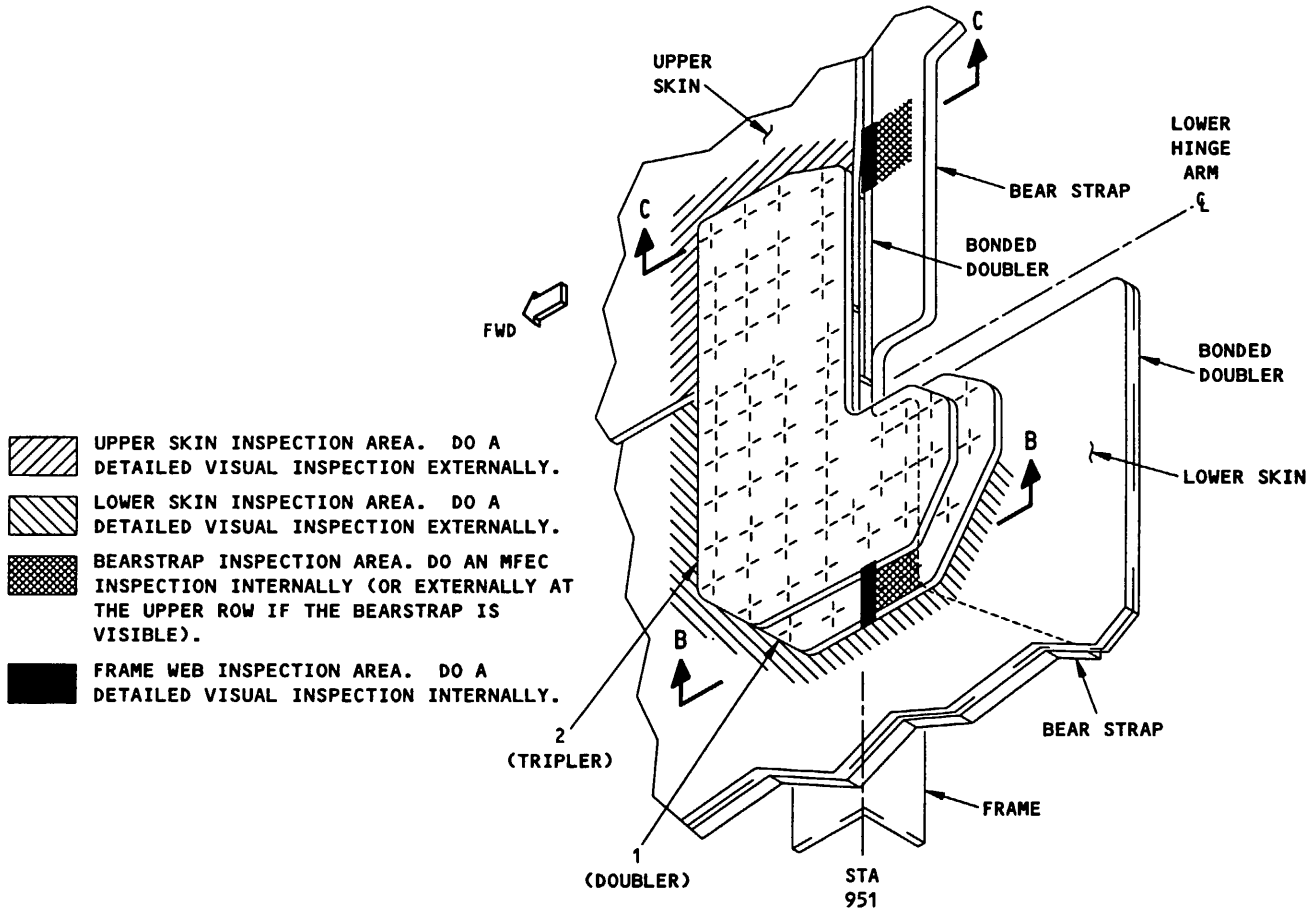

INSPECTION AREA FOR DETAIL IV
DETAIL VII
Skin and Doubler Repair - Aft Entry Door Lower Hinge Cutout
Figure 36 (Sheet 8)

BOEING PROPRIETARY - Copyright © - Unpublished Work - See title page for details.

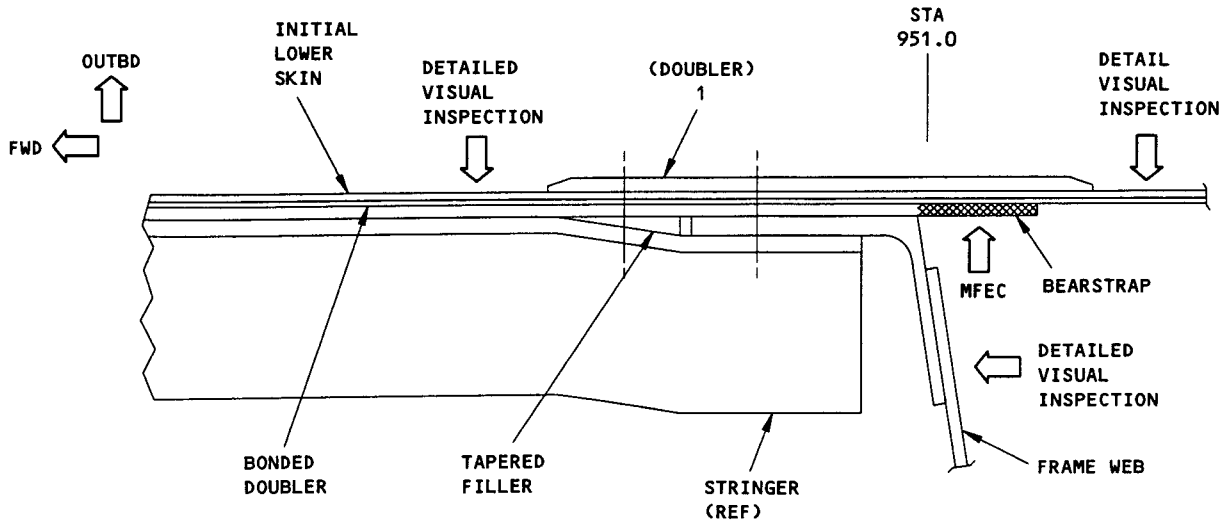

SECTION B-B

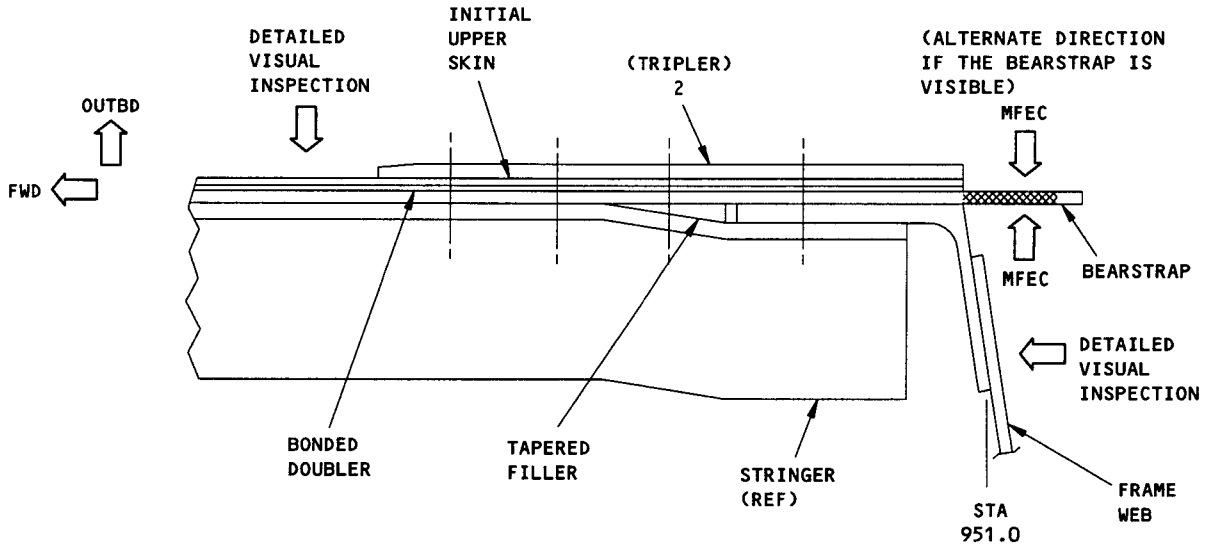

SECTION C-C

Skin and Doubler Repair - Aft Entry Door Lower Hinge Cutout
Figure 36 (Sheet 9)

BOEING PROPRIETARY - Copyright © - Unpublished Work - See title page for details.

SSI NUMBER F-17C INSPECTION REQUIREMENTS			
INSPECTION THRESHOLD	REPEAT INSPECTION		
	METHOD	INTERVAL	REFERENCE
66,000 FLIGHT CYCLES AFTER AIRPLANE DELIVERY G	HIGH FREQUENCY EDDY CURRENT (HFEC)	24,000 FLIGHT CYCLES	737 NDT, D6-37239, PART 6, 51-00-00, FIG. 4 OR 23
NOTE: INSPECT THE FRAME CHORD WITH HFEC METHOD INTERNALLY IN THE REPAIR AREA AS SHOWN IN DETAIL VIII. IN ADDITION, INSPECT THE SKIN, BEARSTRAP, FRAMES AND SILLS PER THE EXISTING INTERNAL INSPECTIONS GIVEN IN THE 737 SSID DOCUMENT FOR F-17C.			

TABLE III

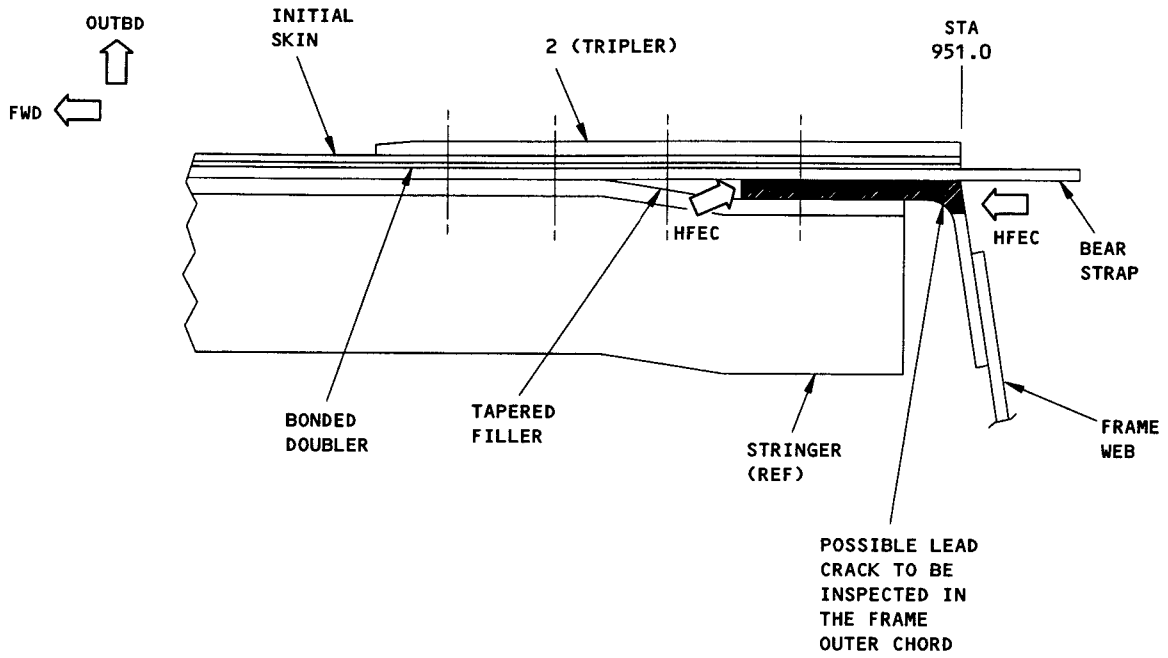

INSPECTION AREA FOR F-17C (TYPICAL)

DETAIL VIII

Skin and Doubler Repair - Aft Entry Door Lower Hinge Cutout
Figure 36 (Sheet 10)

BOEING PROPRIETARY - Copyright © - Unpublished Work - See title page for details.

REPAIR INSTRUCTIONS [A] [B]

1. Remove the fasteners from the repair area. Move the strap away from the skin.
2. Put a stainless steel sheet of metal that is approximately 0.032 inch thick between the stringer S-12 strap and the structure below. This will give protection to the structure.
3. Cut and remove the aft section of the stringer S-12 strap. See Detail I.
4. Make the repair parts. Make the shape of the part 1 strap the same as the initial strap section that was removed. See Detail I and Table I.
5. Assemble the repair parts and drill the fastener holes.
6. Disassemble the repair parts.
7. Remove the nicks, scratches, gouges, burrs and sharp edges from the repair parts and the bare surfaces of the initial parts.
8. Apply a chemical conversion coating to the aluminum repair parts and the bare surfaces of the initial parts. Refer to SRM 51-10-2.
9. Apply one layer of BMS 10-11, Type I primer to the repair parts and the bare surfaces of the initial parts. Refer to SOPM 20-41-02.
10. Install the repair parts with BMS 5-95 sealant between the mating surfaces. Refer to SRM 51-20-4.
11. Install the fasteners. Fasteners that are not made of aluminum must be installed wet with BMS 5-95 sealant.
12. Apply a fillet seal with BMS 5-95 sealant along the edges of the repair parts. Refer to SRM 51-20-4.
13. Apply the finish to the repair area as given in AMM 51-21.
14. Apply corrosion inhibiting compound to the internal surfaces of the repair area. Refer to SRM 51-10-2.

NOTES

- THIS REPAIR WILL NOT HAVE AN EFFECT ON A STRUCTURALLY SIGNIFICANT ITEM (SSI) GIVEN IN SRM 51-00-4, FIG. 3. THUS, NO CHANGE TO THE SUPPLEMENTAL STRUCTURAL INSPECTION DOCUMENT (SSID) INSPECTION PROGRAM IS NECESSARY.
- THIS REPAIR HAS FAA APPROVAL IF THE INSPECTIONS SHOWN IN THIS FIGURE ARE COMPLETED AT THE SPECIFIED TIMES.
- WHEN YOU DO THIS REPAIR, REFER TO THE FOLLOWING:
  - AMM 51-21 FOR INTERIOR AND EXTERIOR FINISHES
  - SOPM 20-41-02 FOR APPLICATION OF CHEMICAL AND SOLVENT RESISTANT FINISHES
  - SRM 51-10-1 FOR DAMAGE CLASSIFICATION
  - SRM 51-10-2 FOR PROTECTIVE TREATMENT OF METAL REPAIR PARTS
  - SRM 51-20-4 FOR REPAIR SEALING
  - SRM 51-30 FOR FASTENER CODE, REMOVAL AND INSTALLATION, HOLE SIZES AND EDGE MARGINS
  - SRM 51-70 FOR AERODYNAMIC SMOOTHNESS.

[A] MAKE AN INSPECTION OF THIS REPAIR AT EACH 4500 FLIGHT CYCLES OR LESS UNTIL THE PREVENTIVE CHANGE/REPAIR CONTAINED IN SB 737-53-1134 IS DONE. MAKE REGULAR INSPECTIONS OF THE REPAIR AS SPECIFIED IN SB 737-53-1134.

[B] THIS REPAIR CANNOT BE USED IF THE REPAIR OR PREVENTIVE CHANGE AS GIVEN IN SB 737-53-1134 HAS BEEN INCORPORATED.

FASTENER SYMBOLS

REFERENCE FASTENER LOCATION

INITIAL FASTENER LOCATION. INSTALL A BACR15CE6D RIVET.

INITIAL FASTENER LOCATION. INSTALL A 1/64 INCH OVERSIZE BACB30FQ6 HEX DRIVE BOLT WITH A BACC30M COLLAR.

REPAIR MATERIAL			
PART		QTY	MATERIAL
1	STRAP	1	0.063 CLAD 7075-T6
2	SPLICE PLATE	1	0.071 CLAD 7075-T6

TABLE I

Fuselage Stringer S-12 Strap Crack Repair Between BS 1121 and BS 1138
Figure 37 (Sheet 1)

BOEING PROPRIETARY - Copyright © - Unpublished Work - See title page for details.

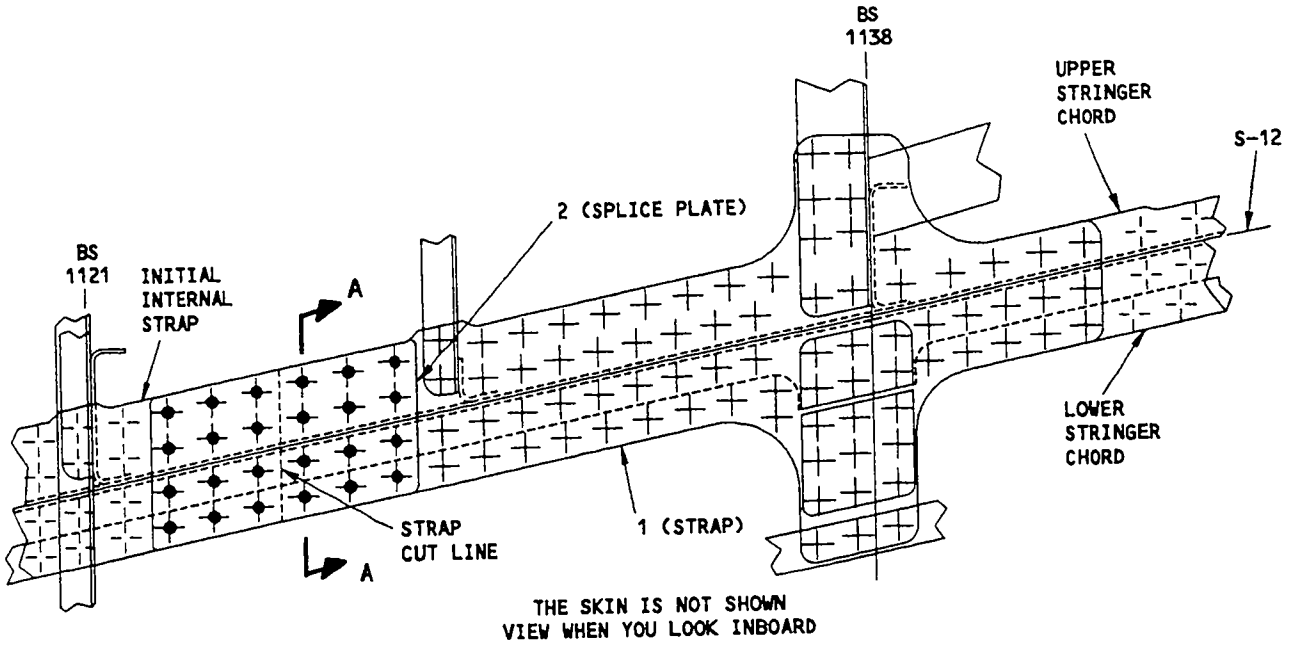

THE LEFT SIDE IS SHOWN.
THE RIGHT SIDE IS ALMOST THE SAME.

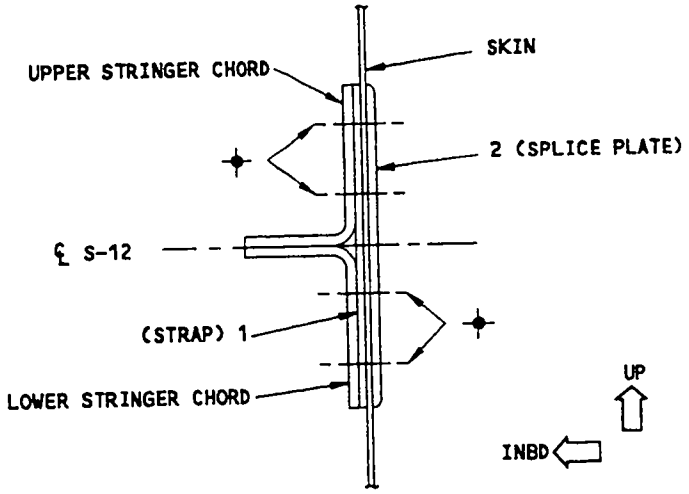

SECTION A-A

DETAIL I

Fuselage Stringer S-12 Strap Crack Repair Between BS 1121 and BS 1138
Figure 37 (Sheet 2)

APPLICABILITY

THIS REPAIR APPLIES TO DAMAGE IN THE SKIN PANEL OF THE WINDOW BELT AS SHOWN IN THE SHADED AREA IN DETAILS II THRU V. THESE DETAILS SHOW TYPICAL CONFIGURATIONS OF AREAS AT THE WINDOW BELT. FOR DAMAGE IN WINDOW BELT AREAS WITH DIFFERENT CONFIGURATIONS OR PARTS, GO TO THE BOEING COMPANY FOR INSTRUCTIONS.

TELL BOEING IF CRACKS OR STOP HOLES ARE OUTSIDE THE SHADED AREA SHOWN IN DETAIL II, III, IV OR V.

DELAMINATION BETWEEN THE SKIN AND THE DOUBLER CAN OCCUR IN AIRPLANES WITH CUM LINE NUMBERS 1 THRU 610.

REFER TO SERVICE BULLETINS 737-53-1078 AND 737-53-1124 FOR INSTRUCTIONS OR INSPECTION FOR DELAMINATION BEFORE YOU DO A REPAIR ON THESE AIRPLANES.

REPAIR INSTRUCTIONS

1. Remove the sidewall panels and insulation from the repair area.
2. Remove the fasteners from the damaged skin and bonded doubler and the window frame.

   NOTE: If a tear strap is cut or has corrosion, it must be sufficiently spliced. This keeps the fail safe capability of the initial design. Refer to Figure 17 for a repair using a tear strap splice.
3. Examine the repair area. Do a high frequency eddy current (HFEC) test to find the ends of the crack. Refer to NDT Part 6, 51-00-00.
4. Examine the window frame for corrosion and cracks. If a repair to the window frame is necessary, refer to SRM 56-20-3.
5. Put a thin steel sheet between the skin panel and the structure below it.
6. Cut out the damaged area as follows:

   NOTE: The cutout must be kept in the shaded area shown in Details II thru V.

   -Cut out the minimum amount of material necessary to remove the crack. Make sure to keep all edge margins to a minimum of 2D. The corners of the cutout must have minimum radius of 0.5 inch.

   -Do an HFEC test along the cutout to make sure there are no cracks. Refer to NDT Part 6, 51-00-00.

   -If there are no cracks, make the cutout larger by 0.04 inch. If necessary, make a part 3 or part 5 filler. The filler must be the same shape as the cutout.

   -If the cutout does not include a fastener hole, a filler is not necessary. Fill the cutout area with BMS 5-95 sealant. Refer to SRM 51-10-1.
7. Make the repair parts. See Table I. If the cutout is in the skin and doubler, see Detail II or IV. If the cutout is in the skin only, see Detail III or V.

   -All of the corners and cutouts must have a radius of 0.5 inch.

   -Make the part 1 or part 4 doubler and the part 2 tripler, if it is used, align with the contour of the skin.

   -Chamfer the edges of the part 1 or part 4 doubler and the part 2 tripler, if it is used. Refer to SRM 51-70. [A]
8. Assemble the repair parts and drill the fastener holes. [B] [C] [D] See Detail II, III, IV or V.
9. Disassemble the repair parts.
10. Remove the nicks, scratches, gouges, burrs, and sharp edges from the repair parts and the skin.
11. Apply a chemical conversion coating to the repair parts and to the bare surfaces of the skin. Refer to SRM 51-10-2.
12. Apply one layer of BMS 10-79, Type II primer to the repair parts and to the bare surfaces of the skin. Refer to SOPM 20-44-04.
13. Install repair washers in the countersunk holes in the skin panel. Refer to SRM 51-30-8.
14. Install shims in the space between parts that are 0.01 inch or larger before you install the fasteners.
15. Install the repair parts with BMS 5-95 sealant between the mating surfaces.
16. Install the fasteners.
17. Install the sidewall panels and insulation that were removed to get access to the repair area.
18. Apply the finish to the repair area. Refer to the applicable Boeing production drawing and AMM 51-21.

Fuselage Skin Repair for Damage at the Window Belt
Figure 38 (Sheet 1)

NOTES

- THIS IS A CATEGORY A REPAIR. THE INSPECTIONS GIVEN IN THE BASELINE ZONAL INSPECTION (BZI) ARE SUFFICIENT TO MAINTAIN THE DAMAGE TOLERANCE OF THE INITIAL STRUCTURE WITH THIS REPAIR INSTALLED. REFER TO 51-00-06 FOR REPAIR CATEGORIES, BZI DEFINITION AND REPAIR ASSESSMENT INFORMATION.
- THIS REPAIR WILL NOT HAVE AN EFFECT ON THE STRUCTURAL SIGNIFICANT ITEMS (SSI) GIVEN IN SRM 51-00-4, FIGURE 3.
- D = THE FASTENER DIAMETER
- MACHINED SURFACES MUST HAVE A FINISH OF 125 MICROINCHES R , UNLESS A DIFFERENT FINISH IS SPECIFIED.
- WHEN YOU USE THIS REPAIR REFER TO:
  - AMM 51-21 FOR INTERIOR AND EXTERIOR FINISHES
  - NDT PART 6, 51-00-00 FOR EDDY CURRENT INSPECTION OF THE FUSELAGE SKIN
  - NDT PART 6, 53-30-00 FOR EDDY CURRENT INSPECTION OF FASTENER HOLES IN THE FUSELAGE SKIN
  - SOPM 20-44-04 FOR APPLICATION OF CORROSION RESISTANT PRIMER
  - SRM 51-10-1 FOR DAMAGE CLASSIFICATION
  - SRM 51-10-2 FOR PROTECTIVE TREATMENT OF METAL
  - SRM 51-20-4 FOR REPAIR SEALING
  - SRM 51-30 FOR FASTENER CODE, REMOVAL, INSTALLATION, HOLE SIZES AND EDGE MARGINS
  - SRM 51-30-8 FOR COUNTERSINKING AND USE OF COUNTERSINK REPAIR WASHERS
  - SRM 51-70 FOR AERODYNAMIC SMOOTHNESS

[A] DO NOT CHAMFER THE EDGE OF THE PART 1 OR PART 4 DOUBLERS OR THE PART 2 TRIPLER THAT IS ALONG THE CUTOUT AROUND THE WINDOW.

[B] DO AN HFEC TEST ON THE INITIAL COUNTERSUNK FASTENER HOLES AS GIVEN IN NDT PART 6, 53-30-00 BEFORE THE HOLES ARE OVERSIZED. REFER TO SERVICE BULLETINS 737-53-1078 OR 737-53-1125 FOR THE INSPECTION PROCEDURES.

[C] IF THERE ARE INITIAL STEEL FASTENERS IN THE REPAIR AREA, DO AS FOLLOWS:
- DO AN HFEC TEST ON THE INITIAL COUNTERSUNK FASTENER HOLES. REFER TO NDT PART 6, 51-00-00.
- IF YOU OVERSIZE THE FASTENER HOLE, USE A 1/16 INCH DIAMETER OVERSIZE BACB30FM()A BOLT. DO NOT USE A FASTENER THAT IS LARGER THAN 5/16 INCH IN DIAMETER.
- INSTALL THE FASTENER WET WITH BMS 5-95 SEALANT IN A TRANSITION FIT HOLE.

[D] EXAMINE THE EDGE MARGIN OF THE WINDOW FORGING BEFORE YOU OVERSIZE A FASTENER HOLE. REFER TO SERVICE BULLETIN 737-53-1078 IF AN EDGE MARGIN WOULD BE LESS THAN 1.7D AFTER YOU OVERSIZE THE FASTENER HOLE.

[E] FOR THE REPAIR FASTENER LOCATIONS, MAKE THE FASTENER SPACING 4D TO 6D IN POSITIONS SIMILAR TO THOSE SHOWN.

[F] USE THE SAME GAGE AS THE SUM OF THE GAGES OF THE INITIAL SKIN AND BONDED DOUBLER.

[G] USE THE SAME GAGE AS THE INITIAL SKIN.

[H] IF TWO ADJACENT WINDOWS OR TWO TO FOUR ADJACENT CORNERS OF THE SAME WINDOW SKIN ARE CRACKED, DO AS FOLLOWS:
- USE ONE CONTINUOUS DOUBLER (OR DOUBLER AND TRIPLER) THAT WILL GO ON ALL OF THE DAMAGED CORNERS
- MAKE THE FASTENER LOCATIONS AND THE SHAPE OF EACH QUADRANT OF THE REPAIR AS SYMMETRICAL AS POSSIBLE.

Fuselage Skin Repair for Damage at the Window Belt
Figure 38 (Sheet 2)

FASTENER SYMBOLS

REFERENCE FASTENER LOCATION

REPAIR FASTENER LOCATION
INSTALL A BACR15BB6D RIVET.

REPAIR FASTENER LOCATION
INSTALL A BACR15CE6D RIVET.

INITIAL FASTENER LOCATION [B] [C] [D]
INSTALL A BACR15ET7D RIVET.

INITIAL FASTENER LOCATION [B] [C] [D]
INSTALL A BACR15BB8D RIVET.

INITIAL FASTENER LOCATION [B] [C] [D]
INSTALL A BACR15BB10D RIVET.

REPAIR MATERIAL			
PART		QTY	MATERIAL
1	DOUBLER	1	0.050 2024-T3 CLAD
2	TRIPLER	1	0.063 2024-T3 CLAD
3	FILLER	AS NECESSARY	2024-T3 CLAD [F]
4	DOUBLER	1	0.063 2024-T3 CLAD
5	FILLER	AS NECESSARY	2024-T3 CLAD [G]

TABLE I

Fuselage Skin Repair for Damage at the Window Belt
Figure 38 (Sheet 3)

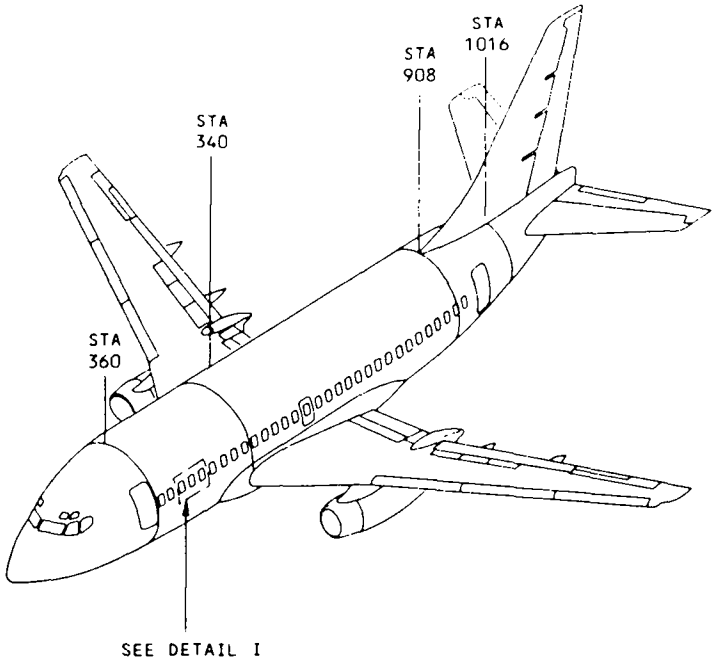

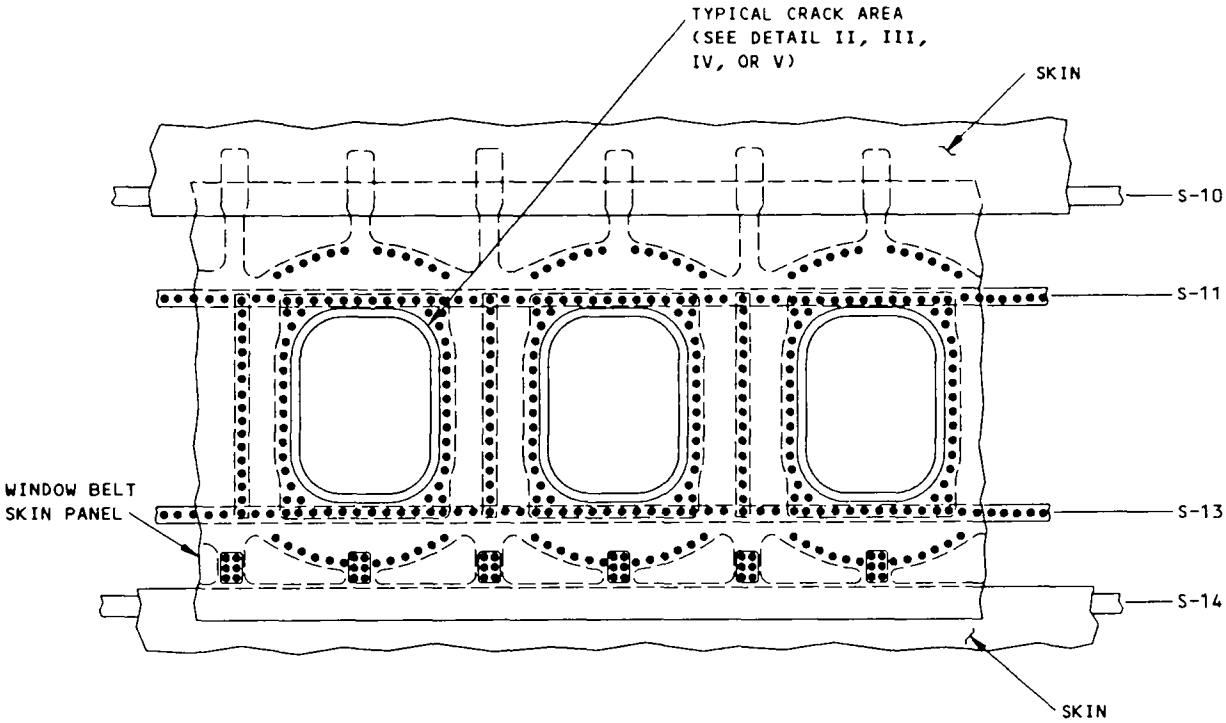

WINDOW BELT SKIN PANEL
(TYPICAL SECTION IN AN AREA WITH SHEAR TIES SHOWN)

DETAIL I

Fuselage Skin Repair for Damage at the Window Belt
Figure 38 (Sheet 4)

E87937

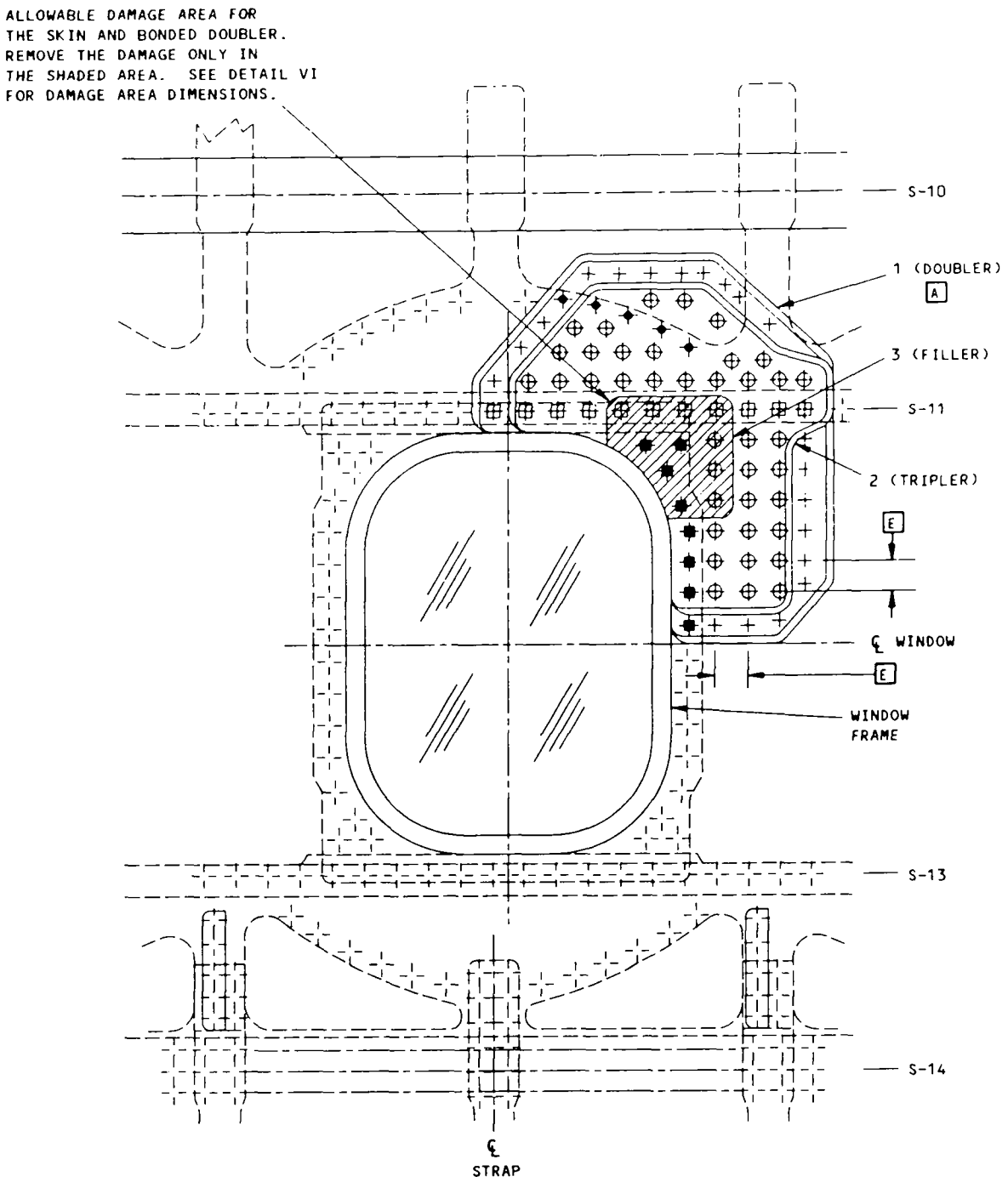

TYPICAL REPAIR FOR DAMAGE TO THE SKIN AND BONDED DOUBLER
AT THE WINDOW SKIN CUTOUT H
DETAIL II

Fuselage Skin Repair for Damage at the Window Belt
Figure 38 (Sheet 5)

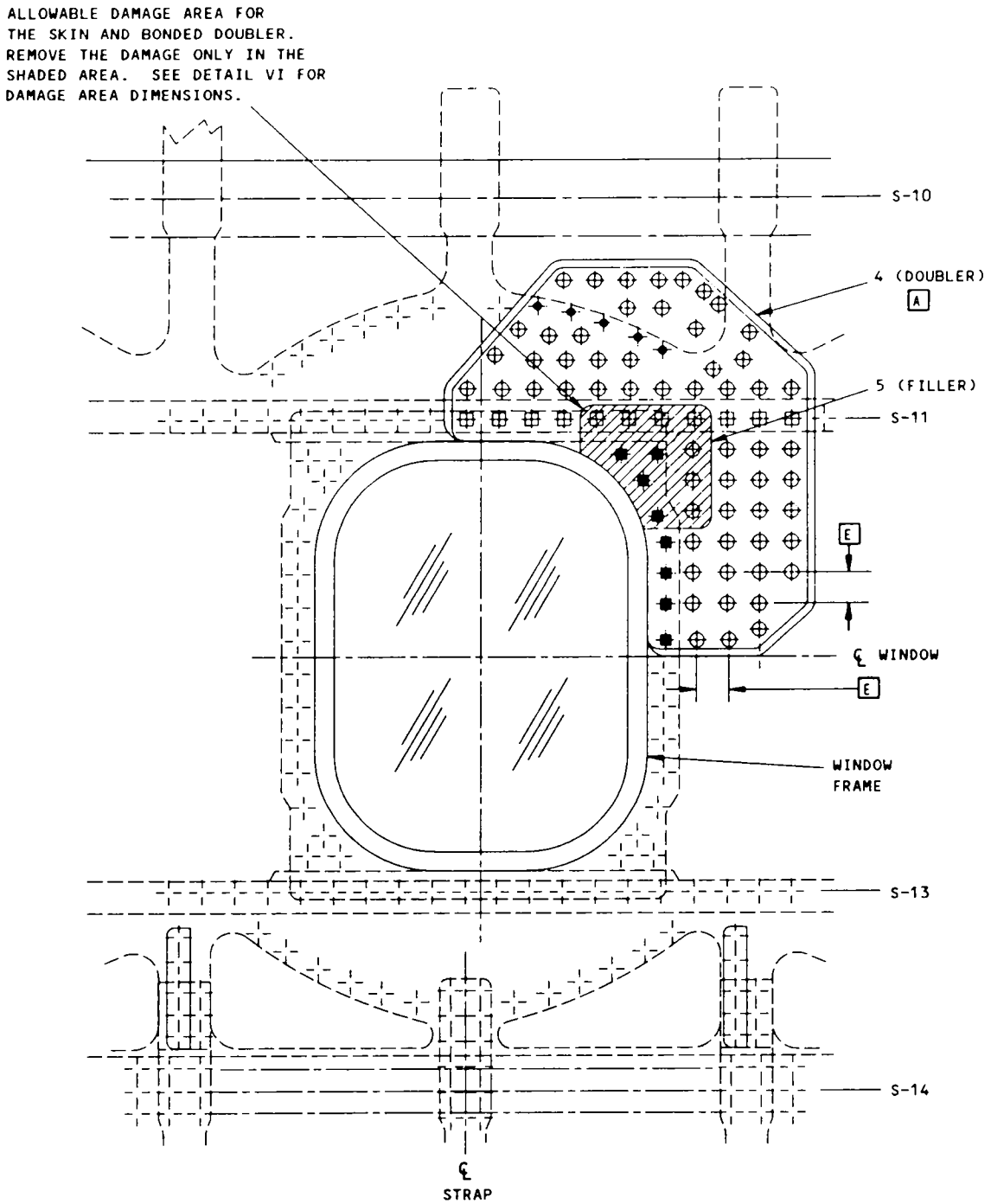

TYPICAL REPAIR FOR DAMAGE TO THE SKIN ONLY AT THE WINDOW SKIN CUTOUT H

DETAIL III

Fuselage Skin Repair for Damage at the Window Belt
Figure 38 (Sheet 6)

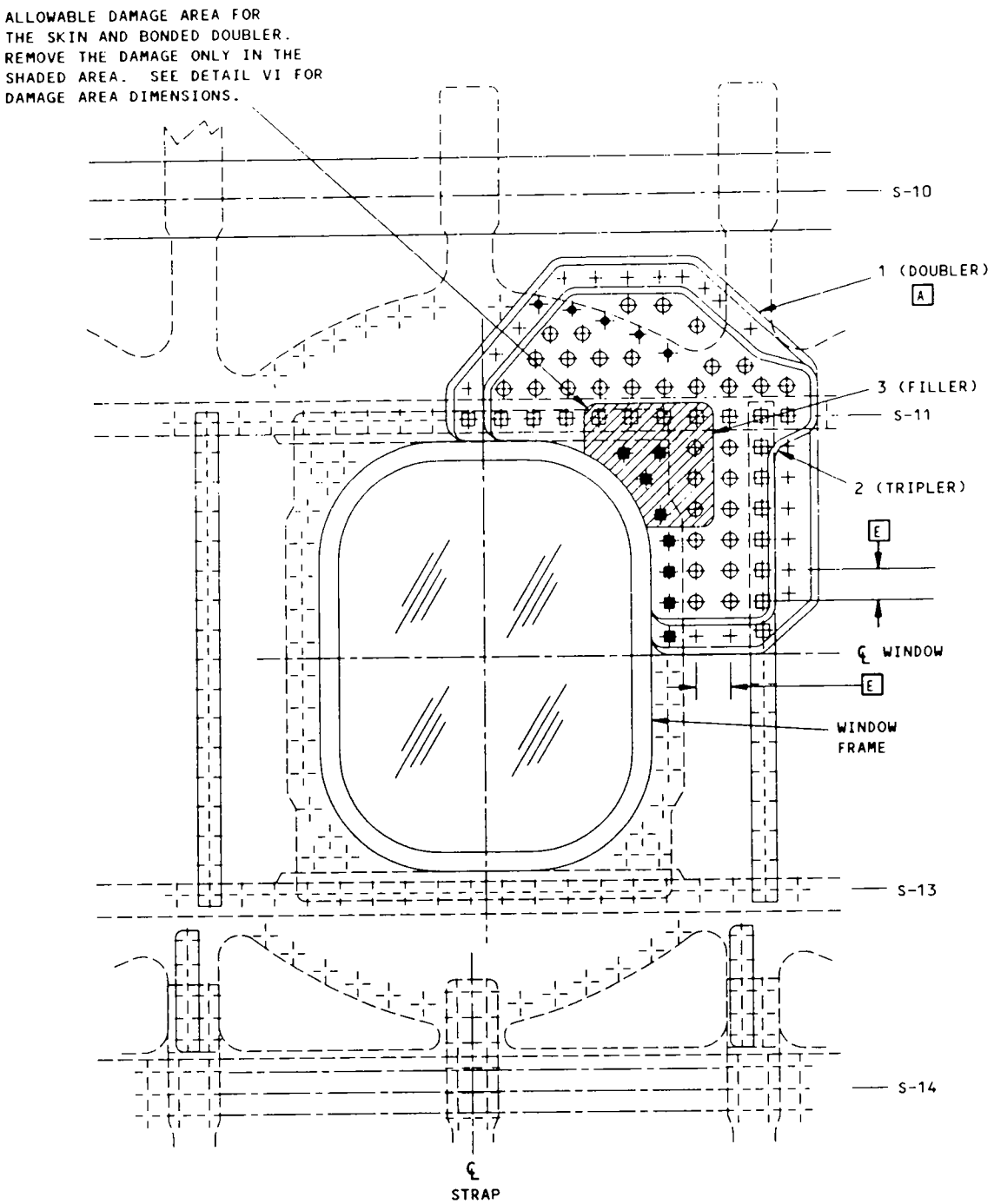

TYPICAL REPAIR FOR DAMAGE TO THE SKIN AND BONDED DOUBLER AT THE WINDOW SKIN CUTOUT, IN AN AREA WITH SHEAR TIES H
DETAIL IV

Fuselage Skin Repair for Damage at the Window Belt
Figure 38 (Sheet 7)

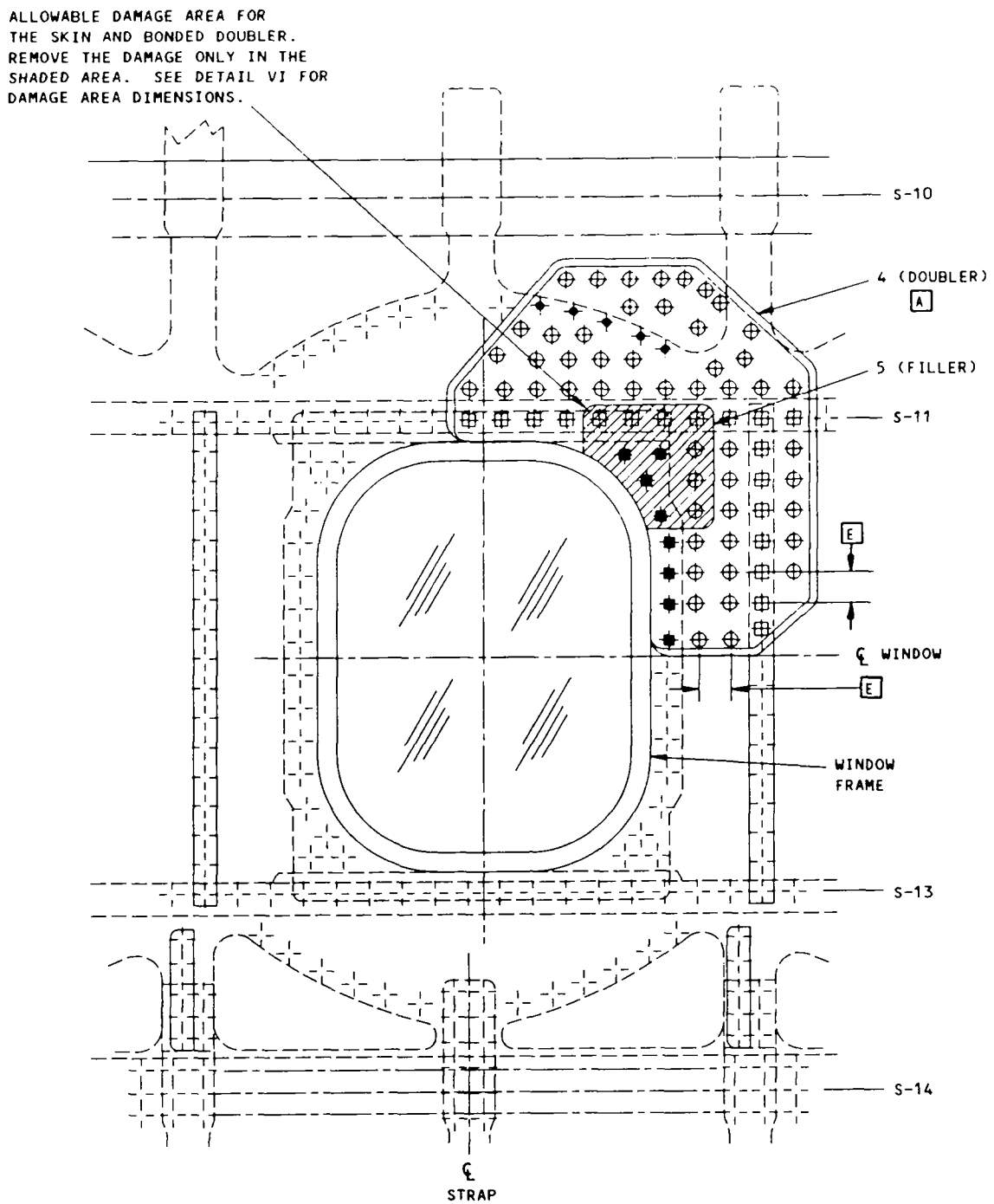

TYPICAL REPAIR FOR DAMAGE TO THE SKIN ONLY AT THE WINDOW SKIN CUTOUT, IN AN AREA WITH SHEAR TIES H

DETAIL V

Fuselage Skin Repair for Damage at the Window Belt
Figure 38 (Sheet 8)

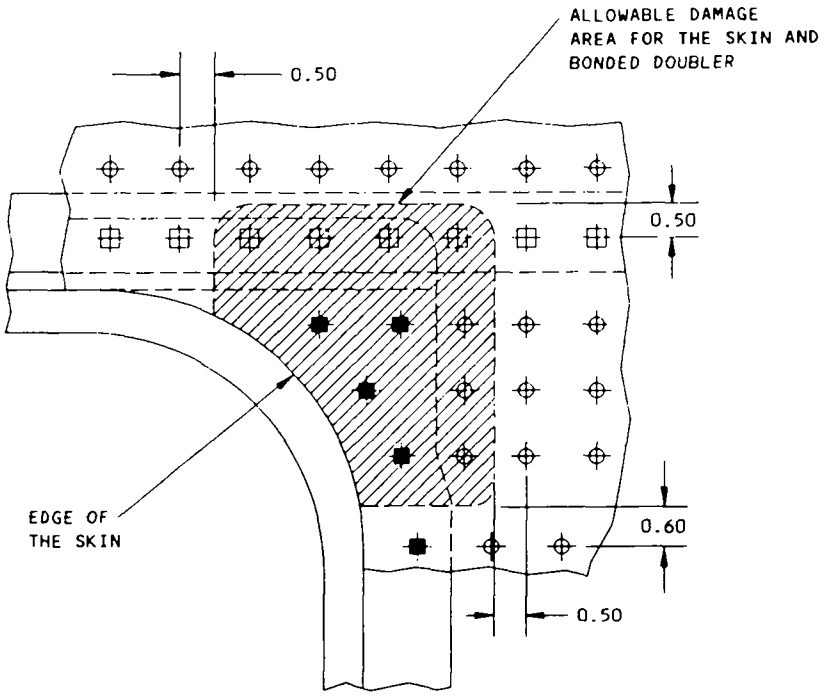

ALLOWABLE DAMAGE AREA
DETAIL VI

Fuselage Skin Repair for Damage at the Window Belt
Figure 38 (Sheet 9)

Figure 39 (Fuselage Skin Longitudinal Lap Splice Repair for Damaged Overlapping and Overlapped Skins at a Tear Strap) has been removed. Refer to 53-30-3, Figure 42, for the repair that replaces Figure 39.

APPLICABILITY

THIS REPAIR IS APPLICABLE TO CRACKS IN THE LOWER SKIN OF THE KEEL BEAM BETWEEN B.S. 660 AND B.S. 724. REFER TO DETAIL I. A CRACK MUST NOT BE MORE THAN 4.0 INCHES IN LENGTH.

THIS REPAIR CAN BE INSTALLED AS A TEMPORARY OR A PERMANENT REPAIR. TO DO A PERMANENT REPAIR, YOU MUST GAIN ACCESS TO THE INTERNAL PART OF THE AIRPLANE. REFER TO SB 737-53-1104.

REPAIR INSTRUCTIONS

1. Get access to the keel beam structure that is located between the main landing gear wheel well forward and aft bulkheads. Refer to SB 737-53-1104 for access and inspection procedures.
2. Stop drill the ends of the cracks. Refer to SRM 51-10-1.
3. Remove the fasteners as necessary from the repair area.
4. Make the repair parts. See Table I and Details I and II.
5. Assemble the repair parts and drill the fastener holes. See Table II for the applicable fasteners.
6. Disassemble the repair parts.
7. Remove the nicks, scratches, burrs, sharp edges and corners from the repair parts and the initial parts.
8. Apply a chemical conversion coating to the repair parts and the bare edges of the initial parts. Refer to SRM 51-10-2.
9. Apply one layer of BMS 10-11, Type I primer to the repair parts and to the bare surfaces of the initial structure. Refer to SOPM 20-41-02.
10. Install repair washers in countersink holes as necessary. Refer to SRM 51-40-08.
11. Install the repair parts with BMS 5-95 sealant between the mating surfaces.
12. Install the fasteners. Fasteners that are not made of aluminum must be installed wet with BMS 5-95 sealant. See Detail II.
13. Apply a fillet seal with BMS 5-95 sealant along the edges of the repair parts. Refer to SRM 51-20-4.
14. Apply the finish to the repair area as given in AMM 51-21.
15. Apply corrosion inhibiting compound to the internal surfaces of the repair area. Refer to SRM 51-10-2.

NOTES

- THIS REPAIR WILL NOT HAVE AN EFFECT ON A STRUCTURALLY SIGNIFICANT ITEM (SSI) GIVEN IN SRM 51-00-4, FIG. 3. THUS, NO CHANGE TO THE SUPPLEMENTAL STRUCTURAL INSPECTION DOCUMENT (SSID) INSPECTION PROGRAM IS NECESSARY.
- D = THE DIAMETER OF THE FASTENER.
- ALL DIMENSIONS ARE IN INCHES, UNLESS GIVEN DIFFERENTLY.
- EDGE MARGINS MUST BE A MINIMUM OF 2D ON ALL REPAIR PARTS AND INITIAL PARTS UNLESS GIVEN DIFFERENTLY. REFER TO SRM 51-30.
- USE CAUTION WHEN YOU DRILL NEW FASTENER HOLES THROUGH THE EXTERIOR PART OF THE SKIN. MAKE SURE THERE IS SUFFICIENT CLEARANCE BETWEEN STRUCTURES THAT ARE ON THE INTERIOR OF THE FUSELAGE. MAKE SURE YOU KEEP SUFFICIENT FASTENER SPACING AND EDGE MARGINS.
- IF BLIND FASTENER REPAIRS ARE USED, EXAMINE THE BLIND FASTENERS 3,000 FLIGHT CYCLES AFTER INSTALLATION, AND EACH 3,000 FLIGHT CYCLES AFTER THAT. IT IS RECOMMENDED THAT THE BLIND FASTENER REPAIR BE REPLACED WITH A SOLID RIVET REPAIR DURING THE SUBSEQUENT OVERHAUL NOT TO EXCEED 10,000 CYCLES.
- WHEN YOU USE THIS REPAIR REFER TO:
  - AMM 51-21 FOR INTERIOR AND EXTERIOR FINISHES
  - SOPM 20-41-02 FOR APPLICATION OF FINISHES
  - SRM 51-30-3 FOR FASTENER SUBSTITUTION
  - SRM 51-10-1 FOR DAMAGE CLASSIFICATION
  - SRM 51-20-01 FOR PROTECTIVE TREATMENT OF METAL REPAIR PARTS
  - SRM 51-20-4 FOR REPAIR SEALING
  - SRM 51-30 FOR FASTENER CODE, REMOVAL AND INSTALLATION, HOLE SIZES AND EDGE MARGINS
  - SRM 51-30-3 FOR FASTENER SUBSTITUTION
  - SRM 51-30-8 FOR COUNTERSINKING AND COUNTERSINK REPAIR WASHERS.

[A] THERE MUST BE A MINIMUM OF TWO REPAIR FASTENER ROWS INBOARD OF THE CRACK AS SHOWN.

[B] THIS REPAIR HAS FAA (DER) APPROVAL CONTINGENT ON ACCOMPLISHMENT OF THE INSPECTIONS AT THE INTERVAL CONTAINED HEREIN.

FASTENER SYMBOLS

- REFERENCE FASTENER LOCATION.
- REPAIR FASTENER LOCATION. SEE TABLE II.
- INITIAL FASTENER LOCATION. SEE TABLE II.
- INITIAL FASTENER LOCATION. SEE TABLE II.

Keel Beam Lower Skin Repair Between BS 660 and BS 724
Figure 40 (Sheet 1)

BOEING PROPRIETARY - Copyright © - Unpublished Work - See title page for details.

REPAIR MATERIAL			
PART		QTY	MATERIAL
1	DOUBLER	1	.080 2024-T3 CLAD
2	DOUBLER	1	.080 2024-T3 CLAD

TABLE I

FASTENER CODE	BLIND FASTENERS (FOR A TEMPORARY REPAIR) B	SOLID FASTENERS (FOR A PERMANENT REPAIR)
(NEW)	BACR15FR5E RIVET (PREFERRED) NAS1738E5 RIVET (OPTIONAL)	BACR15BB6D RIVET
(INITIAL)	BACR15FR6E RIVET (PREFERRED) NAS1738E6 RIVET (OPTIONAL)	BACR15ET7D RIVET
(INITIAL)	BACB30VW6P()U (PREFERRED) MS21141-6P RIVET (OPTIONAL)	BACB30KK6A HEX DRIVE BOLT AND BACC30M COLLAR

TABLE II

Keel Beam Lower Skin Repair Between BS 660 and BS 724
Figure 40 (Sheet 2)

BOEING PROPRIETARY - Copyright © - Unpublished Work - See title page for details.

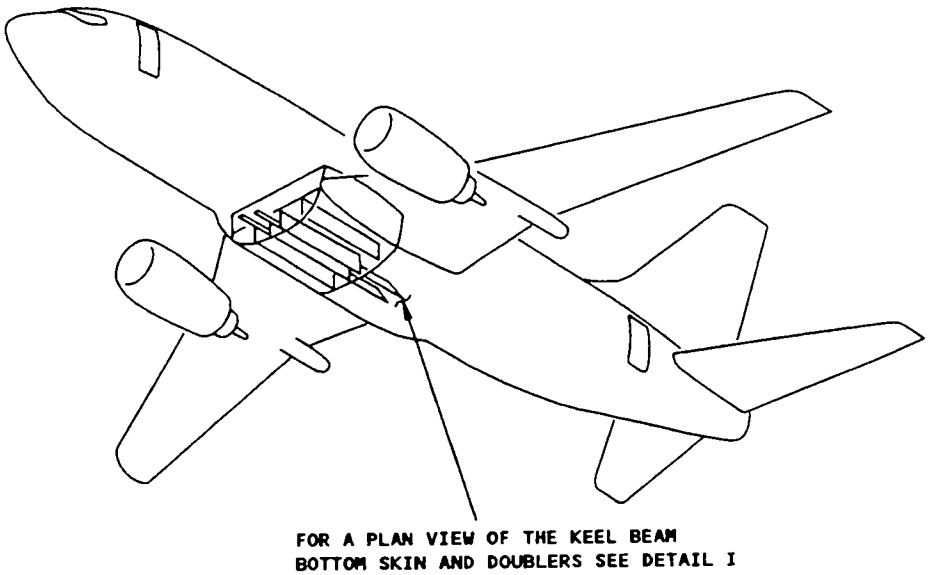

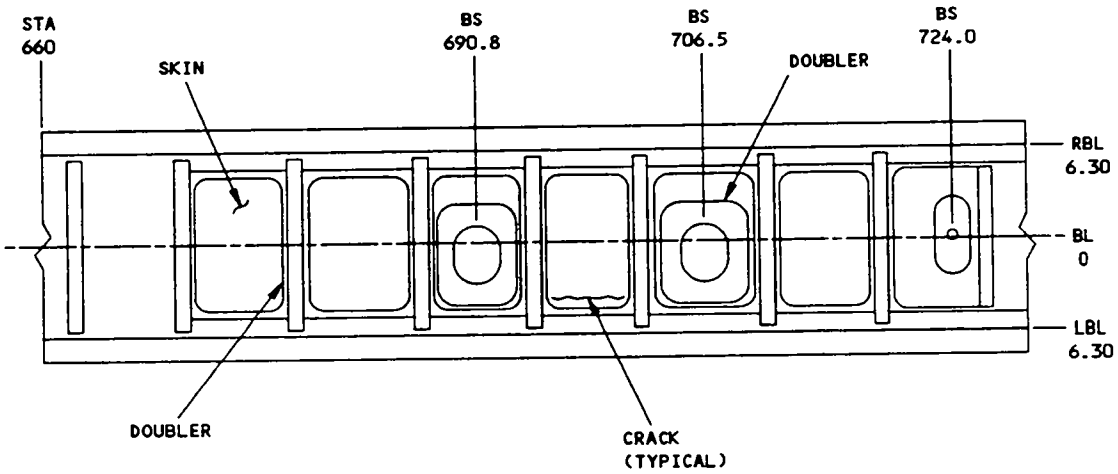

PLAN VIEW OF BOTTOM SKIN AND DOUBLERS
VIEW LOOKING DOWN
DETAIL I

Keel Beam Lower Skin Repair Between BS 660 and BS 724
Figure 40 (Sheet 3)

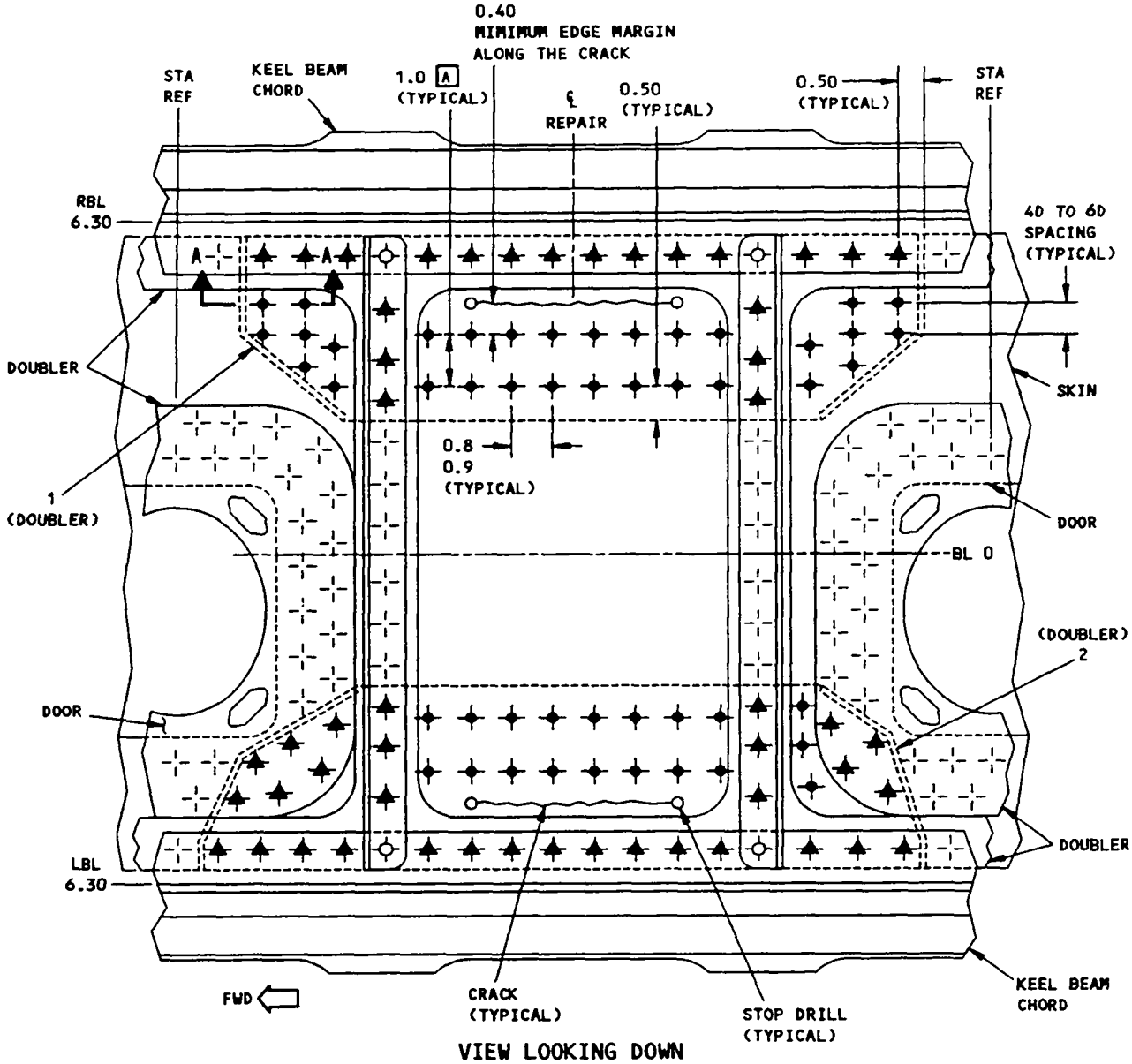

VIEW LOOKING DOWN
DETAIL II

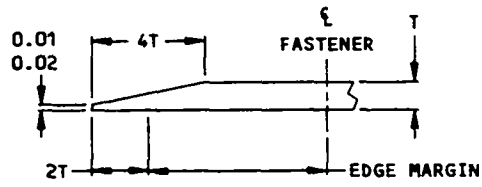

SECTION A-A
(TYPICAL)

Keel Beam Lower Skin Repair Between BS 660 and BS 724
Figure 40 (Sheet 4)

APPLICABILITY

THIS REPAIR IS APPLICABLE TO DAMAGE THAT:

- IS NOT MORE THAN 1.00 INCH (25 MM) IN DIAMETER
- IS IN AN AREA WHERE THE SKIN THICKNESS IS LESS THAN OR EQUAL TO 0.071 INCH.

BECAUSE OF ITS EFFECT ON AERODYNAMIC SMOOTHNESS, A PROTRUDING HEAD FASTENER REPAIR IS NOT PERMITTED IN THESE REGIONS:

- STATIC PRESSURE PORTS
- PITOT-STATIC PROBES
- ANGLE OF AIRFLOW SENSORS.

THESE REGIONS ARE SPECIFIED IN SRM 51-70, FIGURE 3.

REPAIR INSTRUCTIONS

1. Get access to the damaged area.
2. Clean out the damage to a 1.0 inch maximum diameter hole in the skin only. See Detail III. [A]

   NOTE: If there is hole damage in a bonded doubler, go to the Boeing Company for instructions. See Detail III.
3. Make the Part 1 doubler. See Table I, Detail I, and Detail II.
4. Assemble the Part 1 doubler and drill the fastener holes. Use a drill stop to limit the depth of the drill. The maximum drill depth is 0.06 inch more than the skin thickness.
5. Remove the Part 1 doubler.
6. Remove the nicks, scratches, gouges, burrs, and sharp edges from the repair doubler and bare surfaces of the skin.
7. Apply a chemical conversion coating to the Part 1 doubler and bare surfaces of the skin. Refer to SRM 51-10-2.
8. Apply two layers of BMS 10-79, Type II or III, primer to the Part 1 doubler and bare surfaces of the skin. Refer to SOPM 20-44-04.
9. Install the Part 1 doubler with BMS 5-95 sealant between the mating surfaces and add a fillet seal. Refer to SRM 53-30-4.
10. Install the fasteners as given in Table II. Install the fasteners wet with BMS 5-95 sealant.
11. Apply a layer of BMS 10-60, Type II finish to the repair area.

NOTES

- D = THE FASTENER DIAMETER
- ALL DIMENSIONS ARE IN INCHES, UNLESS GIVEN DIFFERENTLY.
- THE BLIND FASTENER REPAIR IS CATEGORY C. THE CATEGORY C REPAIR HAS FAA APPROVAL IF YOU DO THE INSPECTIONS AT THE SPECIFIED THRESHOLD AND INTERVALS, AND REPLACE THE REPAIR AT THE SPECIFIED TIME LIMIT, GIVEN IN TABLE III. REFER TO SRM 51-00-6 FOR REPAIR CATEGORIES, DEFINITIONS AND REPAIR ASSESSMENT PROGRAM DATA.
- THIS REPAIR WILL HAVE AN EFFECT ON THE STRUCTURAL SIGNIFICANT ITEM (SSI) NUMBER F-41 WHEN INSTALLED UNDER THE WING-TO-BODY AND LOWER LOBE FAIRINGS, BUT THE INSPECTION ALTERNATIVES ARE STILL APPLICABLE. THEREFORE, NO NEW INSPECTION ALTERNATIVES ARE NECESSARY FOR THIS REPAIR UNTIL IT IS REPLACED WITH A PERMANENT REPAIR. ASSESSMENT OF THE PERMANENT REPAIR TO MEET DAMAGE TOLERANCE REQUIREMENTS IS NECESSARY. DO THE INSPECTIONS FOR F-41, IF NECESSARY, AT THE SUBSEQUENT SUPPLEMENTAL STRUCTURAL INSPECTION DOCUMENT (SSID) INSPECTION ON THIS AIRPLANE. REFER TO SRM 51-00-4, FIGURE 3 FOR THE APPLICABLE SSI INFORMATION.
- BLIND RIVET REPAIRS MUST NOT BE USED WHERE DOUBLERS, TRIPLERS, AND NONTYPICAL STRUCTURES ARE FOUND UNLESS THE BLIND RIVETS ARE CORRECTLY INSTALLED ON THE INTERNAL STRUCTURE
- WHEN YOU DO THIS REPAIR, REFER TO THE FOLLOWING:
  - SOPM 20-44-04 FOR APPLICATION OF URETHANE COMPATIBLE PRIMER
  - SRM 51-10-1 FOR INSPECTION AND REMOVAL OF DAMAGE
  - SRM 51-10-2 FOR PROTECTIVE TREATMENT OF METAL
  - SRM 51-20-4 FOR SEALING REPAIR
  - SRM 51-30 FOR FASTENER CODE, REMOVAL AND INSTALLATION, HOLE SIZES, EDGE MARGINS AND SUBSTITUTION
  - SRM 51-70 FOR AERODYNAMIC SMOOTHNESS
  - SRM 53-30-4 FOR SEALING OF FUSELAGE SKIN REPAIRS.

[A] THE DISTANCE FROM THE CENTER OF THE HOLE TO AN EDGE OR CUTOUT MUST NOT BE LESS THAN 4 TIMES THE DIAMETER OF THE HOLE.

[B] THERE MUST BE A MINIMUM SPACING OF 4D FROM A REFERENCE FASTENER.

[C] TO MAKE THIS CATEGORY C REPAIR A CATEGORY A REPAIR, REPLACE THE BLIND FASTENERS WITH BACR15BB()D SOLID FASTENERS.

NOTE: WHEN A BLIND FASTENER IS REPLACED WITH A SOLID FASTENER, THE SOLID FASTENER MUST BE A MINIMUM OF 1/32 INCH LARGER IN DIAMETER THAN THE NOMINAL SIZE OF THE BLIND FASTENER BEING REPLACED.

Fuselage Skin - Small External Repair with Blind Fasteners
Figure 41 (Sheet 1)

BOEING PROPRIETARY - Copyright © - Unpublished Work - See title page for details.

FASTENER SYMBOLS

- REFERENCE FASTENER LOCATION. USE REFERENCE FASTENERS TO FIND THE LOCATION OF INTERNAL BONDED DOUBLERS.
- REPAIR FASTENER LOCATION. SEE TABLE II FOR BLIND FASTENERS.

REPAIR MATERIAL			
PART		QTY	MATERIAL
1	DOUBLER	1	2024-T3 CLAD SEE TABLE II FOR THE GAGE

TABLE I

FASTENER	SKIN GAGE (INCHES)	REPAIR PART 1 GAGE (INCHES)	A (INCHES)	B (INCHES)	C (INCHES)	INNER RIVET CIRCLE		OUTER RIVET CIRCLE	
						QTY	DIA (INCHES)	QTY	DIA (INCHES)
NAS1738E() OR NAS1738MW() OR BACR15FR()E()R	0.032	0.036	4.10	1.70	3.10	7	1/8	14	1/8
	0.036	0.040	4.10	1.70	3.10	7	1/8	14	1/8
	0.040	0.045	4.10	1.70	3.10	7	1/8	14	1/8
	0.045	0.050	4.10	1.70	3.10	7	1/8	14	1/8
	0.050	0.056	4.40	1.80	3.50	8	1/8	15	1/8
	0.056	0.063	4.60	1.80	3.50	6	5/32	13	5/32
	0.063	0.071	4.60	1.80	3.50	6	5/32	13	5/32
	0.071	0.080	5.40	2.00	4.25	7	5/32	14	5/32

TABLE II

Fuselage Skin - Small External Repair with Blind Fasteners
Figure 41 (Sheet 2)

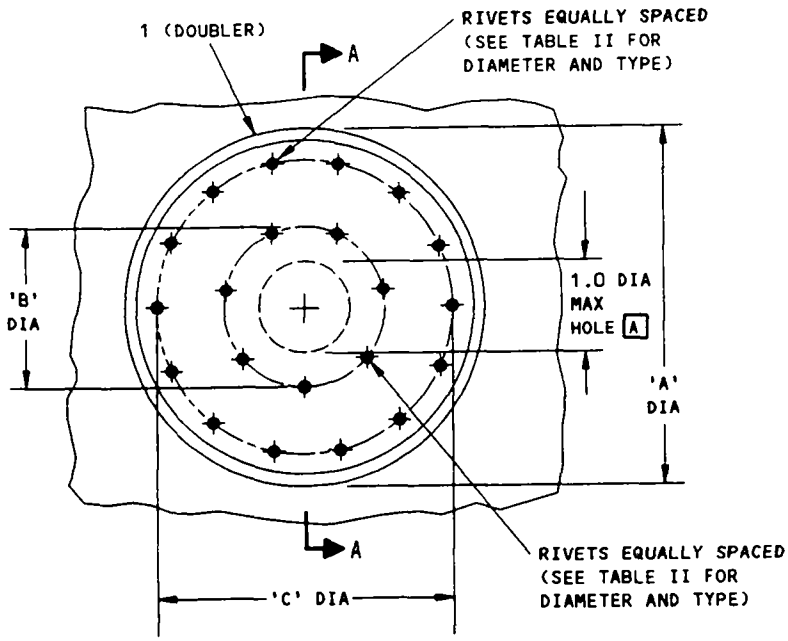

SUBSEQUENT INSPECTIONS ARE NECESSARY FOR CATEGORY C REPAIR. REFER TO TABLE III

INSTALLATION OF THE REPAIR
DETAIL I

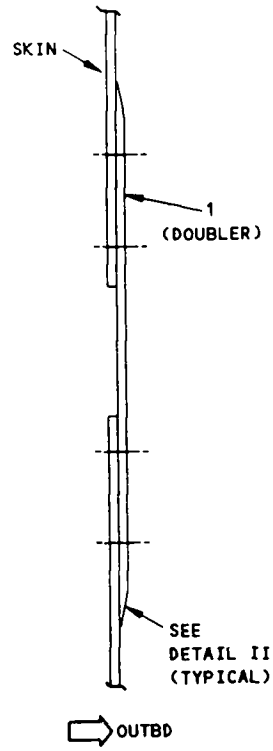

SECTION A-A

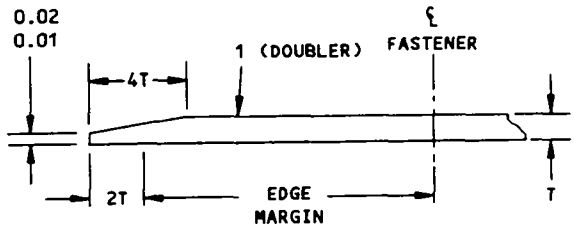

DETAIL II
(TYPICAL ALL EDGES)

Fuselage Skin - Small External Repair with Blind Fasteners
Figure 41 (Sheet 3)

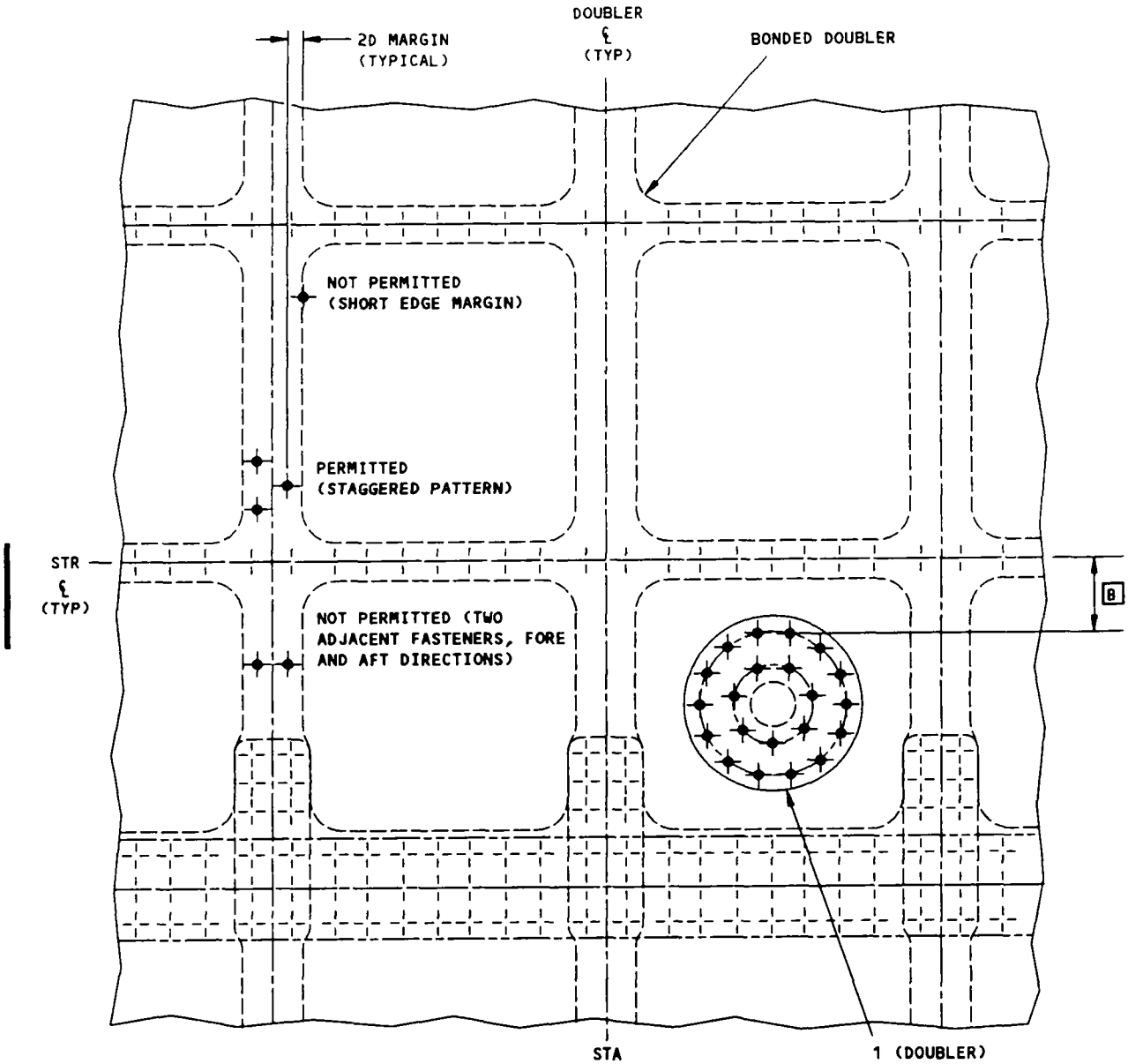

REPAIR FASTENER LOCATIONS AT BONDED DOUBLERS AND A TYPICAL REPAIR DOUBLER
DETAIL III

Fuselage Skin - Small External Repair with Blind Fasteners
Figure 41 (Sheet 4)

CATEGORY C REPAIR INSPECTION REQUIREMENTS				
INSPECTION THRESHOLD	REPEAT INSPECTION			TIME LIMIT
	METHOD	INTERVAL	REFERENCE	
3,000 FLIGHT CYCLES	GENERAL VISUAL	3,000 FLIGHT CYCLES		10,000 FLIGHT CYCLES C
NOTE: INSPECT ALL FASTENER LOCATIONS AT THE DOUBLER FOR MISSING OR LOOSE REPAIR FASTENERS. IF FOUND, REPLACE THE FASTENER. REFER TO DETAIL IV FOR THE AREA WHERE THE EXTERNAL GENERAL VISUAL INSPECTION IS NECESSARY.				

TABLE III

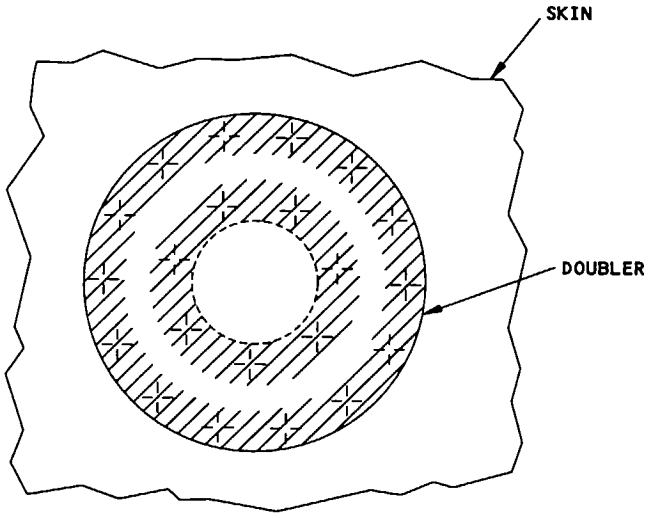

EXTERNAL GENERAL VISUAL INSPECTION AREA

DETAIL IV

Fuselage Skin - Small External Repair with Blind Fasteners
Figure 41 (Sheet 5)

BOEING PROPRIETARY - Copyright © - Unpublished Work - See title page for details.

APPLICABILITY

THIS REPAIR, SHOWN IN DETAIL I, IS FOR LOCAL LAP JOINT LOWER ROW DAMAGE. FOR LAP JOINT DAMAGE THAT IS MORE THAN 30% OF THE LENGTH OF THE SKIN PANEL (BUTT JOINT-TO-BUTT JOINT) CONTACT THE BOEING COMPANY.

THIS REPAIR APPLIES TO:

- CRACKS IN THE LOWER ROW OF FASTENERS IN LONGITUDINAL LAP SPLICES FOR CUM LINE NUMBERS 292 AND ON, AS IDENTIFIED IN SERVICE BULLETIN 737-53A1177. THIS REPAIR ONLY APPLIES TO CRACKS IN THE LAP JOINT LOWER ROW. DO NOT INSTALL THIS REPAIR WHERE THE INITIAL LAPJOINT FASTENERS WERE LOCKBOLTS OR HEX-DRIVE BOLTS.

THIS REPAIR DOES NOT APPLY TO:

- DAMAGE ON STRINGER 20L OR 20R AT BS727A WHERE IT WOULD TOUCH THE STRAP (65-45774-522, LEFT SIDE OR 65-45775-524, RIGHT SIDE) WHICH IS COMMON TO AN INBOARD FLAP, INBOARD TRACK SUPPORT FITTING (65-50813). CONTACT THE BOEING COMPANY FOR REPAIR INSTRUCTIONS AT THESE LOCATIONS.
- DAMAGE AT STRINGER 19L BETWEEN BS 540 AND BS 500A+10 ON CARGO PLANES. CONTACT THE BOEING COMPANY FOR REPAIR INSTRUCTIONS AT THIS LOCATION.
- DAMAGE AT STRINGERS 4L, 10L, OR 14L COMMON TO THE BEAR STRAP OF THE MAIN DECK CARGO DOOR ON CARGO AIRPLANES. CONTACT THE BOEING COMPANY FOR REPAIR INSTRUCTIONS AT THESE LOCATIONS.

Fuselage Skin, Longitudinal Splice -
Repair for Damaged Lower Skin at the Longitudinal Lap Joint Lower Row
Figure 42 (Sheet 1)

BOEING PROPRIETARY - Copyright © - Unpublished Work - See title page for details.

REPAIR INSTRUCTIONS

PROCEDURE I: FIND THE SIZE OF THE CUTOUT

1. Find the location of the area that will be cut out. Do the steps given in Table I. See Examples I thru III which follow Table I.

PROCEDURES NECESSARY TO FIND THE LENGTH OF THE CUTOUT			
STEP	CODE	DESCRIPTION	ACTION
1	⊕	A crack is at this hole, as found by Service Bulletin 737-53A1177.	Find the length of the cutout necessary to remove the crack. See Examples I thru III which follow Table I. Mark the area that will be cut out.
2	⊕	One hole at each end of the area that will be cut out (in the cutout) [A]	Do an HFEC procedure to the holes. Refer to NDT Part 6, 51-00-00, Fig. 16 (0.03 reference standard). If there is a crack, make the hole larger to a diameter of 5/16 inch and do the HFEC procedure again. A. If a crack remains, this hole becomes ⊕. Do step 1 again and adjust the area that will be cut out, as necessary. B. If there is no crack, continue to step 3.
3	⊕	Three holes forward and three holes aft of ends of the area that will be cut out [B]	Do an HFEC procedure to the holes. Refer to NDT Part 6, 51-00-00, Fig. 16 (0.03 reference standard). A. If there is no crack and the hole is 5/32 inch in diameter, you will oversize the hole to 0.221/0.233 inch in diameter. In Procedure VI, you will install a BACR15ET7AD rivet in the repair doubler. B. If there is a crack, make the hole larger to a diameter of 3/16 inch. Do an HFEC procedure to this hole. - If there is no crack, make the hole larger to a diameter of 0.254/0.265 inch. In Procedure VI, you will install a BACR15BB8AD rivet in the repair doubler. If a crack remains, this hole becomes ⊕. Do step 1 again and adjust area that will be cut out, as necessary. C. If there is no crack and the hole is 3/16 inch in diameter, you will oversize the hole to 0.254/0.265 inch in diameter. In procedure VI, you will install a BACR15BB8AD rivet in the repair doubler. If there is a crack, this hole becomes ⊕. Do step 1 again and adjust area that will be cut out, as necessary.

TABLE I

Fuselage Skin, Longitudinal Splice -
Repair for Damaged Lower Skin at the Longitudinal Lap Joint Lower Row
Figure 42 (Sheet 2)

BOEING PROPRIETARY - Copyright © - Unpublished Work - See title page for details.

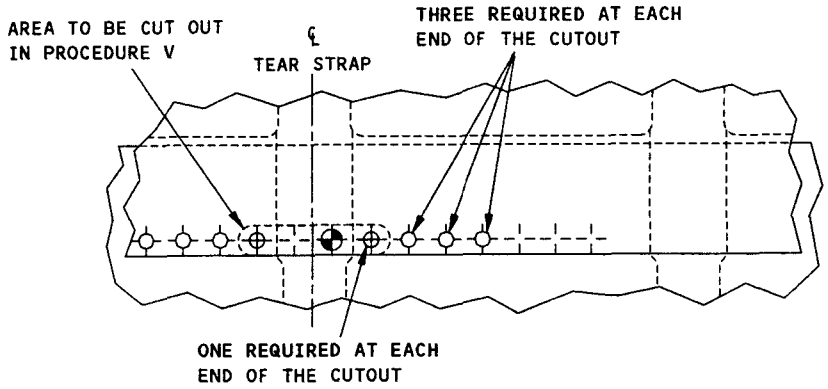

CRACK OR CRACKS AT A TEAR STRAP
EXAMPLE I

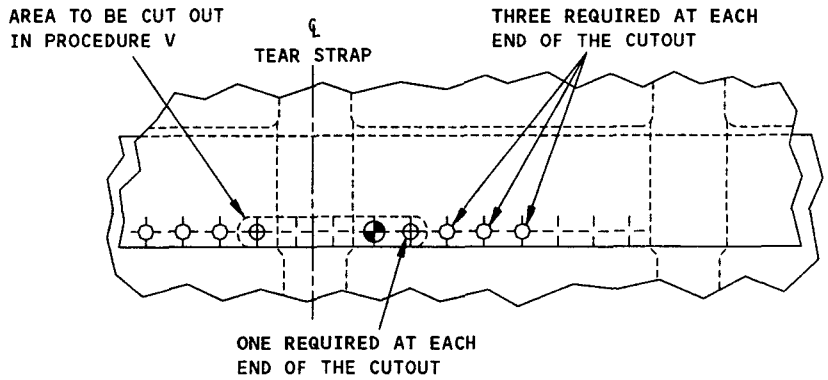

CRACK OR CRACKS AT A FASTENER ADJACENT TO A TEAR STRAP
EXAMPLE II

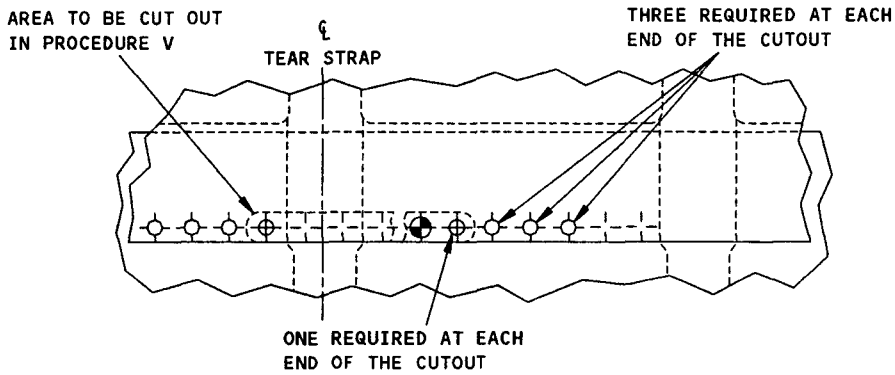

CRACK OR CRACKS AT TWO TO FOUR FASTENERS AWAY FROM A TEAR STRAP
EXAMPLE III

NOTE: CUTOUTS CAN BE SYMMETRICAL ABOUT THE CENTERLINE OF THE TEAR STRAP.

-|- CAN ALSO BE ⊕ IN EACH CONFIGURATION SHOWN.

PROCEDURE I FASTENER AND CUTOUT CONFIGURATIONS
Fuselage Skin, Longitudinal Splice -
Repair for Damaged Lower Skin at the Longitudinal Lap Joint Lower Row
Figure 42 (Sheet 3)

BOEING PROPRIETARY - Copyright © - Unpublished Work - See title page for details.

PROCEDURE II: FIND THE TYPE AND SIZE OF REPAIR TO DO

1. If the cutout will be at only one tear strap without shear ties and:
   - Is not at stringer 10, do the repair shown in Detail II.
   - Is between window frames at stringer 10, do the repair shown in Detail IX.
   - Is above window frames at stringer 10, do the repair shown in Detail X.
2. If the cutout will be at only one tear strap with shear tie attachments and:
   - is not at stringer 10, do the repair shown in Detail V, VI or VII.
3. If the cutout will be at two or more adjacent tear straps and:
   - Is not at stringer 10, do the repair shown in Detail VIII.
   - Is at stringer 10, do the repair shown in Detail XI.
4. If the cutout will be adjacent to a butt splice, do the repair shown in Detail XII.
5. If the cutout will be at a tear strap area near a butt splice in areas of reduced stringer spacing, do the repair shown in Detail XIII.
6. If the cutout will be at a non-typical structure near a butt splice, do the repair shown in Detail XIV.
7. If you replace a Figure 39 repair, do the repair shown in Detail XVIII.
8. If internal access is not possible, a temporary repair can be installed. See procedure VII.

PROCEDURE III: EXAMINE INITIAL HOLES AND INSPECT THE SKIN IN THE REPAIR AREA

1. Remove the remaining fasteners (△ and ⌖) that are necessary for the repair.
2. Do a high frequency eddy current (HFEC) inspection procedure to these holes. If there is a crack, tell the Boeing Company.

   NOTE: It is not necessary to do this inspection:
   - For the holes given in Procedure I
   - For the holes where the fasteners (△) were changed at the lap joint, butt joint, or at the window belt (as given in Service Bulletins 737-53A1039, 737-53-1076, 737-53-1078, 737-53-1124, and 737-53-1179).

- PROCEDURE III (CONT)

  When you install the repair parts (in the area where the fasteners were changed to button-head fasteners as given in the Service Bulletins) install again the initial type of protruding-head fasteners with the same diameter.
- For the holes to which the Service Bulletins in this note are applicable, but have not been done. Do the inspections and the modifications (as given in the Service Bulletins) at the same time that you install the repair parts. Do the Service Bulletins tasks at the repair fastener locations shown in this figure, as applicable. If cracks, corrosion, or delaminations are found as a result of the service bulletin inspections, contact The Boeing Company.

Refer to NDT Part 6, 53-30-00, Figure 3.

If there is no crack and:

- The △ hole has a diameter of 5/32 inch, oversize the hole to 0.221/0.233 inch in diameter. In Procedure VI, install a BACR15ET7AD rivet. [C] [D]
- The △ hole has a diameter of 3/16 inch or 1/4 inch. In Procedure VI, install a BACR15BB8D rivet in a 0.254/0.265 inch diameter hole. [C] [D]
- The ⌖ hole has a diameter of 3/16 inch, install a BACR15BB6D rivet in Procedure VI. If necessary, oversize the hole to 0.221/0.233 in diameter. In Procedure VI, install a BACR15ET7AD rivet. [D] [J] [K]

3. Do an NDT inspection of the chem-mill step above the lap joint in the repair area as given in Service Bulletin 737-53A1210. Contact Boeing if cracks are found.

PROCEDURE IV: SPECIAL INSTRUCTIONS WHEN YOU REPLACE THE FIGURE 39 REPAIR

1. Remove the Figure 39 doubler and filler.
2. Use care when you remove the fasteners to not damage the holes.
3. Inspect the outer row of the initial Figure 39 repair fasteners as shown in Detail XVIII.
4. Inspect the initial holes in the repair area as given in Procedure III and modify as applicable.
5. If no cracks are found, install the fillers and doublers as given in Detail XVIII. Use the fasteners shown in Table II and Table IV.

Fuselage Skin, Longitudinal Splice -
Repair for Damaged Lower Skin at the Longitudinal Lap Joint Lower Row
Figure 42 (Sheet 4)

G76694

BOEING PROPRIETARY - Copyright © - Unpublished Work - See title page for details.

In the area common to the Figure 39 repair:

EXISTING FASTENER	REPLACE WITH:
BACR15DS7D	BACR15ET7AD
BACR15CE8AD	BACR15BB8AD
BACR15CE6AD or BACR15CE6D	BACR15BB6D
Shear Head Hi-lok	BACB30KK*A (Same size as the initial fastener)
Tension Head Hi-lok	BACB30MD*A (Same size as the initial fastener)
Common to the lap joint lower row, if the NACA preventive modification was previously accomplished	BACR15ET7AD (Same size as the initial fastener) or BACR15BB8AD (Same size as the initial fastener)
Common to the lap joint lower row, if the NACA preventive modification was not previously accomplished	BACR15ET7AD or BACR15BB8AD See procedure I.

TABLE II

6. If cracks are found, contact The Boeing Company for repair instructions.

PROCEDURE V: MAKE THE CUTOUT

CAUTION: DO NOT MAKE A NICK OR GOUGE IN THE STRINGER WHEN YOU MAKE THE CUTOUT.

1. Carefully make the cutout as necessary. See Detail III.
2. Keep all cut skin sections. Mark the stringer number, left or right side, forward and aft station locations and the aircraft identification, with airplane cycles, on each section. Send the samples to the address that follows:

   Boeing Commercial Airplane Company
   Spares Distribution Center
   Repair Overhaul and Exchange Services
   2201 South 142nd, Door W10
   Seatac, WA 98168
   USA

   Attention: Airline Support Manager

   Forward to 737 Post Production Fuselage Stress, for engineering evaluation

PROCEDURE VI: MAKE AND INSTALL THE REPAIR PARTS

1. Make the repair parts as given in Table III and shown in Details II and IV thru XVIII. For repair parts that are 0.036 inch and thicker, pre-form or roll the part to match the initial fuselage contour prior to installation.Refer to SRM 51-20-1 and 51-70, Figure 8.
2. Assemble the repair parts. Keep a 0.050 to 0.070 inch clearance between repair parts 3 and 4 and the edges of the initial skins. See Detail IV.
3. Drill the fastener holes.

   NOTE: If there are more than three initial production fastener holes, one after another, in one of the critical fast ener rows, these holes can be zero-timed. For 5/32 inch diameter initial holes, limit the hole size to a maximum of 7/32 inch. For 6/32 inch diameter initial holes, limit the hole size to a maximum of 1/4 inch. For initial holes 1/4 inch and larger, contact Boeing. Maintain 4D to 6D fastener spacing and a minimum 1.7D edge margin. Zero-timing will make the inspection threshold start from the time the repair was installed. Refer to the paragraph "Hole Preparation For Repairs" in SRM 51-10-1 for the zero-timing procedure.
4. Disassemble the repair parts.
5. Remove the nicks, scratches, gouges, burrs and sharp edges from the repair parts and the initial skins.
6. Apply a chemical conversion coating to the repair parts and to the cut edges of the initial skins. Refer to SRM 51-10-2.
7. Apply one layer of BMS 10-79, Type II primer to the repair parts and to the cut edges of the initial skins. Refer to SOPM 20-44-04.
8. Clean the faying surfaces of the fuselage skin and repair doublers and fillers prior to application of faying surface sealant. Refer to SRM 51-20-4.
9. Install countersunk repair washers as necessary. Refer to SRM 51-30-8.
10. Install the repair parts with BMS 5-95 sealant between the mating surfaces. Refer to SRM 51-20-4 and 53-30-4.
11. Install the fasteners. Q
12. Apply a fillet seal with BMS 5-95 sealant along the edges of the repair parts. Refer to SRM 51-20-4.
13. Apply a layer of BMS 10-11, Type II enamel to the repair area. Refer to SOPM 20-41-02.
14. Apply a layer of BMS 3-23 corrosion inhibiting compound on the internal surfaces of the repair area. Refer to SRM 51-10-2.

Fuselage Skin, Longitudinal Splice -
Repair for Damaged Lower Skin at the Longitudinal Lap Joint Lower Row
Figure 42 (Sheet 5)

BOEING PROPRIETARY - Copyright © - Unpublished Work - See title page for details.

PROCEDURE VII: TEMPORARY REPAIR THAT USES BLIND RIVETS [X]

CAUTION: BLIND FASTENERS CAN BE USED ONLY IF YOU ARE SURE THAT THEY WILL BE SEATED CORRECTLY AGAINST THE DOUBLERS, TRIPLERS OR OTHER INTERNAL STRUCTURE (IF PRESENT). KEEP SUFFICIENT FASTENER SPACING AND EDGE MARGINS.

1. Use the blind fasteners listed in Table V.
2. You can not do a temporary repair at the locations that follow:
   - Repairs common to butt joints (Details XII, XIII, and XIV)
   - Stringer 10 repairs common to the window belt doubler from BS 360 to BS 540 and BS 727 to BS 908 (Details IX, X, XI, and XIII) on airplanes L/N 292 through 519
   - Repairs that replace the Figure 39, Procedure IV (Detail XVIII)
   - Repairs with initial rivets that are 7/32 inch or larger.
   - Repairs at locations with initial hex drive bolts or lock bolts.
3. When a temporary repair is installed, the repair Parts 5 and 6 (Internal Doubler) and Part 7 (Taper fillers) are not necessary. When you replace the temporary repair with the permanent repair, install the internal doublers and taper fillers.
4. Follow all other instructions listed in Procedures I, II, III, V, and VI.

NOTES

- S = THE DISTANCE BETWEEN FASTENERS
- D = THE DIAMETER OF THE FASTENER
- ALL DIMENSIONS ARE IN INCHES, UNLESS SHOWN DIFFERENTLY.
- MACHINED SURFACES MUST HAVE A FINISH OF 125 MICROINCHES Ra OR BETTER, UNLESS A DIFFERENT FINISH IS SPECIFIED
- WHEN YOU USE THIS REPAIR REFER TO:
  - AMM 51-21 FOR INTERIOR AND EXTERIOR FINISHES
  - NDT PART 6, 51-00-00, Fig. 16 FOR EDDY CURRENT INSPECTION OF FASTENER HOLES IN ALUMINUM PARTS
  - NDT PART 6, 53-30-00, Fig. 3 FOR THE EDDY CURRENT INSPECTION OF COUNTERSINK HOLES IN ALUMINUM PARTS
  - SOPM 20-44-04 FOR APPLICATION OF URETHANE COMPATIBLE FINISHES
  - SRM 51-00-6 FOR REPAIR CATEGORIES, DEFINITIONS AND REPAIR ASSESSMENT PROGRAM DATA
  - SRM 51-10-1 FOR INSPECTION AND REMOVAL OF DAMAGE AND ZERO-TIMING PROCEDURE
  - SRM 51-10-2 FOR PROTECTIVE TREATMENT OF METAL
  - SRM 51-20-4 FOR REPAIR SEALING
  - SRM 51-30 FOR FASTENER CODE, REMOVAL AND INSTALLATION, HOLE SIZES AND EDGE MARGINS
  - SRM 51-70 FOR AERODYNAMIC SMOOTHNESS.

[A] THIS STEP MAKES SURE THAT A CRACK WILL NOT EXTEND TO THE EDGE OF THE CUTOUT.

[B] THIS STEP MAKES SURE THAT THERE ARE NO CRACKS AT FASTENER HOLES ADJACENT TO THE CUTOUT.

[C] IF THIS FASTENER WAS CHANGED (AS GIVEN IN SERVICE BULLETIN 737-53A1039, 737-53-1076, 737-53-1078, 737-53-1124, OR 737-53-1179) INSTALL AGAIN THE INITIAL TYPE OF PROTRUDING-HEAD FASTENER WITH THE SAME DIAMETER.

[D] INSTALL RIVETS WITH DRIVEN HEADS THAT ARE A MINIMUM OF 1.4D IN DIAMETER. IF THERE ARE STEEL FASTENERS IN THE REPAIR AREA, REPLACE THEM WITH FASTENERS OF THE INITIAL TYPE AND MATERIAL (EXCEPT USE PROTRUDING-HEAD FASTENERS). USE THE DIAMETER THAT IS GIVEN IN THE REPAIR FIGURE.

[E] USE A THICKNESS OF 0.036, 0.040 OR 0.050. MAKE THE THICKNESS OF PARTS 3 PLUS 4 THE SAME AS THE THICKNESS OF THE OVERLAPPING SKIN PLUS BONDED DOUBLER (PLUS OR MINUS 0.01)

[F] REFER TO DETAIL XV THRU XVII FOR TAB GEOMETRY AND THE LOCATIONS OF REPAIR FASTENERS AT THE TEAR STRAP.

[G] ADJUST THE CONFIGURATION OF THE REPAIR PARTS EDGES AS NECESSARY TO KEEP A MINIMUM 1.7D EDGE MARGIN ON INITIAL FASTENERS AND MINIMUM 2.0D EDGE MARGIN ON REPAIR FASTENERS. MAKE THE DISTANCE BETWEEN FASTENERS 0.90 TO 1.2.

[H] IT IS OPTIONAL TO EXTEND THE REPAIR PARTS (TO COMBINE WITH AN ADJACENT REPAIR) AS SHOWN IN DETAILS VIII AND XI.

[I] YOU CAN CHANGE THE LENGTH OF THE REPAIR PARTS IF NECESSARY TO REPAIR THE CUTOUTS MADE IN PROCEDURE V. WHEN YOU EXTEND THE REPAIR DOUBLERS (PARTS 1 AND 2) KEEP THE FASTENER PATTERN AROUND THE CUTOUT AS SHOWN IN THE REPAIR DETAILS. DO NOT STOP THE REPAIR DOUBLERS OR THE REPAIR FILLERS AT A TEAR STRAP.

Fuselage Skin, Longitudinal Splice -
Repair for Damaged Lower Skin at the Longitudinal Lap Joint Lower Row
Figure 42 (Sheet 6)

BOEING PROPRIETARY - Copyright © - Unpublished Work - See title page for details.

[J] INSTALL A COUNTERSINK REPAIR WASHER AS GIVEN IN SRM 51-30-8.

[K] KEEP A MINIMUM EDGE MARGIN OF 1.5D ON THE SHEAR TIE. IF YOU CANNOT KEEP THE MINIMUM EDGE MARGIN, WRITE TO BOEING FOR REPAIR INSTRUCTIONS.

[L] USE ONLY THE THICKNESS OF THE LOWER SKIN TO FIND THE THICKNESS OF THE DOUBLER PART 2. DO NOT INCLUDE THE THICKNESS OF THE LOWER BONDED DOUBLER WHEN YOU FIND THE THICKNESS OF THE LOWER SKIN.

LOWER SKIN THICKNESS	DOUBLER (2) THICKNESS
0.032 INCH	0.040 INCH
0.036 INCH	0.040 INCH
0.040 INCH	0.050 INCH
0.045 INCH	0.050 INCH
0.050 INCH	0.063 INCH

[M] THE MIRROR IMAGE OF THIS DETAIL IS ALSO PERMITTED.

[N] YOU CAN EXTEND THE CUTOUT AS NECESSARY FOR CRACKS BETWEEN THE TEAR STRAPS. SEE PROCEDURE I.

[O] IF POSSIBLE, EXTEND THE REPAIR DOUBLER OR FILLER AN ADDITIONAL ROW PAST THE INITIAL FASTENER ROWS OF INTERNAL STRUCTURE. IF THE REPAIR DOUBLER OR FILLER ENDS ON INTERNAL STRUCTURE, THE REPAIR IS CATEGORY B.

NOTE: INTERNAL STRUCTURE INCLUDES STRINGERS, FRAMES, INTERCOSTALS, REINFORCED STRAPS OR OTHER STRUCTURE THAT IS ATTACHED TO THE SKIN WITH FASTENERS.

[P] REFER TO OPERATOR'S REPAIR ASSESSMENT GUIDELINES FOR THE REPEAT INSPECTION INTERVAL AND METHOD ALTERNATIVES.

[Q] IF THE AIRPLANE HAS LESS THAN 66,000 FLIGHT CYCLES, THE INSPECTION THRESHOLD IS THE EARLIER OF:

- THE INITIAL SCHEDULED INSPECTION AS GIVEN IN THE OPERATOR'S REPAIR ASSESSMENT PROGRAM (RAP)
- 66,000 FLIGHT CYCLES.

IF THE AIRPLANE HAS MORE THAN 66,000 FLIGHT CYCLES AND THE INITIAL SCHEDULED SUPPLEMENTAL STRUCTURAL INSPECTION DOCUMENT (SSID) INSPECTION HAS BEEN PERFORMED, THE INSPECTION THRESHOLD IS:

- THE NEXT SCHEDULED SSID INSPECTION FOR THE STRUCTURALLY SIGNIFICANT ITEMS F-39F, F-39G AND F-39H IN THE REPAIRED AREA.

[R] HIGH FREQENCY EDDY CURRENT (HFEC) INSPECT THE FASTENER HOLES PRIOR TO INSTALLATION OF THE PERMANENT FASTENER. REFER TO NDT PART 6, 51-00-00, FIGURE 16 (0.03 NOTCH STANDARD).

[S] NO BLIND FASTENER OPTION FOR OVERSIZE 7/32 INCH PERMANENT RIVETS COMMON TO SHEAR TIE LOCATIONS.

[T] AT THE EIGHT FASTENER LOCATIONS ABOVE THE DAMAGE CUT OUT, COMMON TO THE TEAR STRAP AND THE REPAIR DOUBLERS, INSTALL BACR15FR6E()R BLIND RIVETS INSTEAD OF BACR15FR5E()R RIVETS. SEE DETAIL XXI FOR THE EIGHT FASTENER LOCATIONS. [AD]

[U] TO MAKE THE CATEGORY C BLIND RIVET REPAIR, A CATEGORY A OR B REPAIR, REPLACE THE BLIND RIVETS WITH THE PERMANENT RIVETS LISTED IN TABLE V. WHEN YOU REPLACE THE TEMPORARY REPAIR WITH THE PERMANENT REPAIR, INSTALL THE INTERNAL DOUBLER (SPLICE STRAP) AND TAPER FILLERS.

[V] DO NOT END THE NUMBER 3 FILLER ON THE FASTENERS COMMON TO THE STRINGER. IF NECESSARY, EXTEND THE FILLER ONE ROW BELOW THE STRINGER.

[W] THE SOLID RIVET REPAIR IS CATEGORY A AND NO SUPPLEMENTAL INSPECTIONS ARE NECESSARY IF CONDITION 1, 2 OR 3 IS MET:

1. A. THE CRITICAL FASTENER ROWS IN THE SKIN, DOUBLER AND TEAR STRAP, CAN BE VISUALLY INSPECTED FROM THE INSIDE.
   B. THE BASE SKIN THICKNESS IS EQUAL TO OR GREATER THAN 0.056 INCH
   C. THE REPAIR IS NOT WITHIN 10 INCHES OF A CUTOUT.
2. A. THE LENGTH AND WIDTH OF THE REPAIR DOUBLER IS LESS THAN OR EQUAL TO 12 INCHES.
   B. THE CRITICAL FASTENER ROWS IN THE SKIN, DOUBLER AND TEAR STRAP CAN BE VISUALLY INSPECTED FROM THE INSIDE.
   C. NO OTHER REPAIR DOUBLER IS INSTALLED WITHIN 3 INCHES IN EITHER DIRECTION.
   D. THE REPAIR IS NOT WITHIN 10 INCHES OF A CUTOUT.
3. A. THE LENGTH OF THE REPAIR DOUBLER, IN THE LONGITUDINAL DIRECTION, IS LESS THAN OR EQUAL TO 12 INCHES.
   B. THE REPAIR DOUBLER IS LOCATED BELOW S-10L OR S-10R.
   C. THE CRITICAL FASTENER ROWS IN THE SKIN, DOUBLER AND TEAR STRAP CAN BE VISUALLY INSPECTED FROM THE INSIDE.
   D. NO OTHER REPAIR DOUBLER IS INSTALLED WITHIN 3 INCHES IN THE LONGITUDINAL DIRECTION.
   E. THE REPAIR IS NOT WITHIN 10 INCHES OF A CUTOUT.

Fuselage Skin, Longitudinal Splice -
Repair for Damaged Lower Skin at the Longitudinal Lap Joint Lower Row
Figure 42 (Sheet 7)

BOEING PROPRIETARY - Copyright © - Unpublished Work - See title page for details.

IF THIS REPAIR IS NOT A CATEGORY A, THEN IT IS A CATEGORY B. THE CATEGORY B REPAIR HAS FAA APPROVAL IF YOU DO THE SUPPLEMENTAL INSPECTIONS GIVEN IN TABLE VII. INCORPORATION OF THESE REQUIREMENTS INTO THE AIRPLANE'S MAINTENANCE PROGRAM SATISFIES THE DAMAGE TOLERANCE ASSESSMENT OF THE REPAIR SPECIFIED BY THE REPAIR ASSESSMENT PROGRAM. THIS ASSESSMENT CAN BE DONE AFTER YOU RELEASE THE AIRPLANE TO SERVICE. REFER TO SRM 51-00-6 FOR GENERAL DATA ABOUT THE REPAIR ASSESSMENT PROGRAM. SEE DETAILS XXIII AND XXIV FOR THE INSPECTION AREA.

X IF THIS REPAIR USES BLIND RIVETS UNDER PROCEDURE VII, THEN IT IS A CATEGORY C REPAIR. THE CATEGORY C REPAIR HAS FAA APPROVAL IF YOU DO THE INSPECTIONS AT THE SPECIFIED THRESHOLD AND INTERVALS, AND REPLACE THE REPAIR AT THE SPECIFIED TIME LIMIT, GIVEN IN TABLE VIII. U

Y THIS REPAIR WILL HAVE AN EFFECT ON THE STRUCTURAL SIGNIFICANT ITEM (SSI):

- NUMBER F-39 WHEN INSTALLED IN THE CROWN AREA, BUT THE SUPPLEMENTAL INSPECTIONS GIVEN IN TABLE VII WILL MEET THE SSID INSPECTION REQUIREMENTS FOR F-39F, G AND H IN THE REPAIR AREA. HOWEVER, THE INTERNAL INSPECTION ALTERNATIVES OF F-39A, B AND C ARE STILL APPLICABLE.
- NUMBER F-41 WHEN INSTALLED IN THE LOWER LOBE AND WING-TO-BODY FAIRING AREAS; BUT THE SUPPLEMENTAL INSPECTIONS GIVEN IN TABLE VII WILL MEET THE SSID EXTERNAL INSPECTION REQUIREMENT FOR F-41. HOWEVER, THE INTERNAL INSPECTION OF F-41 IS STILL APPLICABLE.

DO THE INTERNAL INSPECTIONS FOR F-39A, B, C AND F-41, IF NECESSARY, AT THE SUBSEQUENT SUPPLEMENTAL STRUCTURAL INSPECTION DOCUMENT (SSID) INSPECTION ON THIS AIRPLANE. REFER TO SRM 51-00-4, FIGURE 3 FOR THE APPLICABLE SSI DATA.

Z THIS REPAIR WILL HAVE AN EFFECT ON THE STRUCTURAL SIGNIFICANT ITEM (SSI):

- NUMBER F-38 WHEN INSTALLED ABOVE STRINGER S-10; BUT THE INSPECTION ALTERNATIVES OF F-38B THRU F ARE STILL APPLICABLE. THUS, NO NEW INSPECTION ALTERNATIVES ARE NECESSARY FOR F-38
- NUMBER F-39 WHEN INSTALLED IN THE CROWN AREA, BUT THE SUPPLEMENTAL INSPECTIONS GIVEN IN TABLE VII WILL MEET THE SSID INSPECTION REQUIREMENTS FOR F-39F, G AND H IN THE REPAIR AREA. HOWEVER, THE INTERNAL INSPECTION ALTERNATIVES OF F-39A, B AND C ARE STILL APPLICABLE.
- NUMBER F-41 WHEN INSTALLED IN THE LOWER LOBE AND WING-TO-BODY FAIRING AREAS; BUT THE SUPPLEMENTAL INSPECTIONS GIVEN IN TABLE VII WILL MEET THE SSID EXTERNAL INSPECTION REQUIREMENT FOR F-41. HOWEVER, THE INTERNAL INSPECTION OF F-41 IS STILL APPLICABLE.

DO THE INTERNAL INSPECTIONS FOR F-38A THRU G, F-39A THRU C AND F-41, IF NECESSARY, AT THE SUBSEQUENT SUPPLEMENTAL STRUCTURAL INSPECTION DOCUMENT (SSID) INSPECTION ON THIS AIRPLANE. REFER TO SRM 51-00-4, FIGURE 3 FOR THE APPLICABLE SSI DATA.

AA THIS REPAIR WILL HAVE AN EFFECT ON THE STRUCTURAL SIGNIFICANT ITEM (SSI):

- NUMBER F-39 WHEN INSTALLED IN THE CROWN AREA, BUT THE SUPPLEMENTAL INSPECTIONS GIVEN IN TABLE VII WILL MEET THE SSID INSPECTION REQUIREMENTS FOR F-39F, G AND H IN THE REPAIR AREA. HOWEVER, THE INTERNAL INSPECTION ALTERNATIVES OF F-39A, B AND C ARE STILL APPLICABLE.

DO THE INTERNAL INSPECTIONS FOR F-39A, B, AND C, IF NECESSARY, AT THE SUBSEQUENT SUPPLEMENTAL STRUCTURAL INSPECTION DOCUMENT (SSID) INSPECTION ON THIS AIRPLANE. REFER TO SRM 51-00-4, FIGURE 3 FOR THE APPLICABLE SSI DATA.

AB LAY OUT THE NEW FASTENER PATTERN TO BEST MATCH THE EXISTING PRODUCTION LAP JOINT IN THE FORWARD AND AFT DIRECTION. INSTALL A MINIMUM OF 3 FASTENER ROWS COMMON TO THE REPAIR DOULBERS BELOW THE CUTOUT. INSTALL A MINIMUM OF 4 FASTENER ROWS COMMON TO THE REPAIR DOUBLERS ABOVE THE CUTOUT.

AC FOR TEMPORARY REPAIRS USING BLIND RIVETS, USE EXTREME CARE WHEN YOU DRILL RIVET HOLES FROM THE OUTSIDE TO AVOID SHORT EDGE MARGIN.

AD NAS1738E(*) IS AN ALTERNATIVE FASTENER.

AE MAKE THE TAPERED FILLER WITH A 50 TO 1 TAPER RATIO. APPLY A CHEMICAL CONVERSION COATING TO THE BARE SURFACES OF THE FILLER. REFER TO SRM 51-10-2. THEN APPLY ONE LAYER OF BMS 10-79, TYPE II PRIMER. REFER TO SOPM 20-44-04.

AF SEE DETAILS XV AND XXII FOR THE INSTALLATION OF INTERNAL DOUBLERS.

Fuselage Skin, Longitudinal Splice -
Repair for Damaged Lower Skin at the Longitudinal Lap Joint Lower Row
Figure 42 (Sheet 8)

BOEING PROPRIETARY - Copyright © - Unpublished Work - See title page for details.

FASTENER SYMBOLS

- REFERENCE FASTENER LOCATION.
- INITIAL FASTENER LOCATION. INSTALL A BACR15ET7AD RIVET OR A BACR15BB8AD RIVET, UNLESS THE PRODUCTION FASTENER WAS A 1/4 INCH RIVET, THEN INSTALL A BACR15BB8D FASTENER. SEE PROCEDURE III. [C] [D]
- INITIAL FASTENER LOCATION INSTALL A BACR15ET7AD RIVET OR A BACR15BB8AD RIVET. SEE PROCEDURE I. [C] [D]
- INITIAL FASTENER LOCATION INSTALL A BACR15BB6D RIVET OR A BACR15ET7AD RIVET. SEE PROCEDURE III. [D] [J] [K]
- INITIAL AND REPAIR FASTENER LOCATIONS SEE TABLE IV. [D]
- REPAIR FASTENER LOCATION. INSTALL A BACR15BB6D RIVET. [D]
- REPAIR FASTENER LOCATION. INSTALL A BACR15BB5D RIVET CENTERED ON BONDED DOUBLER. [D]
- REFERENCE FASTENER LOCATION. SEE PROCEDURE I.
- REFERENCE FASTENER LOCATION. SEE PROCEDURE I.
- REPAIR FASTENER COMMON TO SRM 53-30-3, FIGURE 39. INSTALL AS GIVEN IN TABLE II. [D] [J] [K]

REPAIR MATERIAL			
	PART	QTY	MATERIAL
1	DOUBLER	1	0.032 CLAD 2024-T3
2	DOUBLER	1	2024-T3 CLAD [L]
3	FILLER, STRUCTURAL	1	0.032 CLAD 2024-T3
4	FILLER, STRUCTURAL	1	2024-T3 CLAD [E]
5	INTERNAL DOUBLER (SPLICE STRAP)	1	0.032 CLAD 2024-T3
6	INTERNAL DOUBLER (SPLICE STRAP)	1	0.032 CLAD 2024-T3
7	FILLER (TAPERED)	2	0.032 CLAD 2024-T3 [AE]

TABLE III

IF THE INITIAL FASTENER IS:	INSTALL:
NONE	BACR15BB6AD
BACR15CE5D	BACR15BB6AD [J]
BACR15CE6D	BACR15BB6D [J]
BACR15CE8D	BACR15BB8D [J]
NAS333CPA5	BACB30FP6A [J]
HEX DRIVE BOLT/ LOCKBOLT	BACB30FP*A [J] (SAME SIZE AS INITIAL)
OTHER	BUTTON HEAD EQUIVALENT AS GIVEN IN SRM 51 OR CONTACT THE BOEING COMPANY FOR MORE INFORMATION [J]

TABLE IV

Fuselage Skin, Longitudinal Splice -
Repair for Lower Skin at the Longitudinal Lap Joint Lower Row
Figure 42 (Sheet 9)

BOEING PROPRIETARY - Copyright © - Unpublished Work - See title page for details.

BLIND AND PERMANENT REPLACEMENT FASTENERS FOR THE CATEGORY C REPAIR					
ORIGINAL PRODUCTION FASTENER	INTENDED FASTENER		INSTALL BLIND RIVET FASTENER		REPLACE BLIND RIVET WITH PERMANENT RIVET [R]
	SYMBOL	TYPE	TYPE [AD]	HOLE DIAMETER	
NONE		BACR15BB5D	BACR15FR5E(*)R	0.176 - 0.180	BACR15BB6AD(*) [D]
NONE		BACR15BB6D	BACR15FR6E(*)R	0.205 - 0.209	BACR15ET7AD(*)
BACR15CE6D		BACR15BB6D	BACR15FR6E(*)R [J]	0.205 - 0.209	BACR15ET7AD(*)
NONE		BACR15BB6AD	BACR15FR5E(*)R	0.176 - 0.180	BACR15BB6AD(*) [D]
BACR15CE5D		BACR15BB6AD	BACR15FR5E(*)R [J]	0.176 - 0.180	BACR15BB6AD(*) [D]
BACR15CE6D		BACR15BB6D	BACR15FR6E(*)R [J]	0.205 - 0.209	BACR15ET7AD(*)
BACR15CE5D		BACR15ET7AD	BACR15FR5E(*)R [J]	0.176 - 0.180	BACR15ET7AD
BACR15CE5D		BACR15BB8AD	BACR15FR6E(*)R [J]	0.205 - 0.209	BACR15BB8AD
BACR15CE6D		BACR15BB8AD	BACR15FR6E(*)R [J]	0.205 - 0.209	BACR15BB8AD
BACR15CE5D		BACR15ET7AD	BACR15FR5E(*)R [J]	0.176 - 0.180	BACR15ET7AD
BACR15CE5D	[T]	BACR15ET7AD	BACR15FR6E(*)R [J] [T]	0.205 - 0.209	BACR15ET7AD
BACR15CE6D		BACR15BB8AD	BACR15FR6E(*)R [J]	0.205 - 0.209	BACR15BB8AD

TABLE V

Fuselage Skin, Longitudinal Splice -
Repair for Damaged Lower Skin at the Longitudinal Lap Joint Lower Row
Figure 42 (Sheet 9A)

G76778

BOEING PROPRIETARY - Copyright © - Unpublished Work - See title page for details.

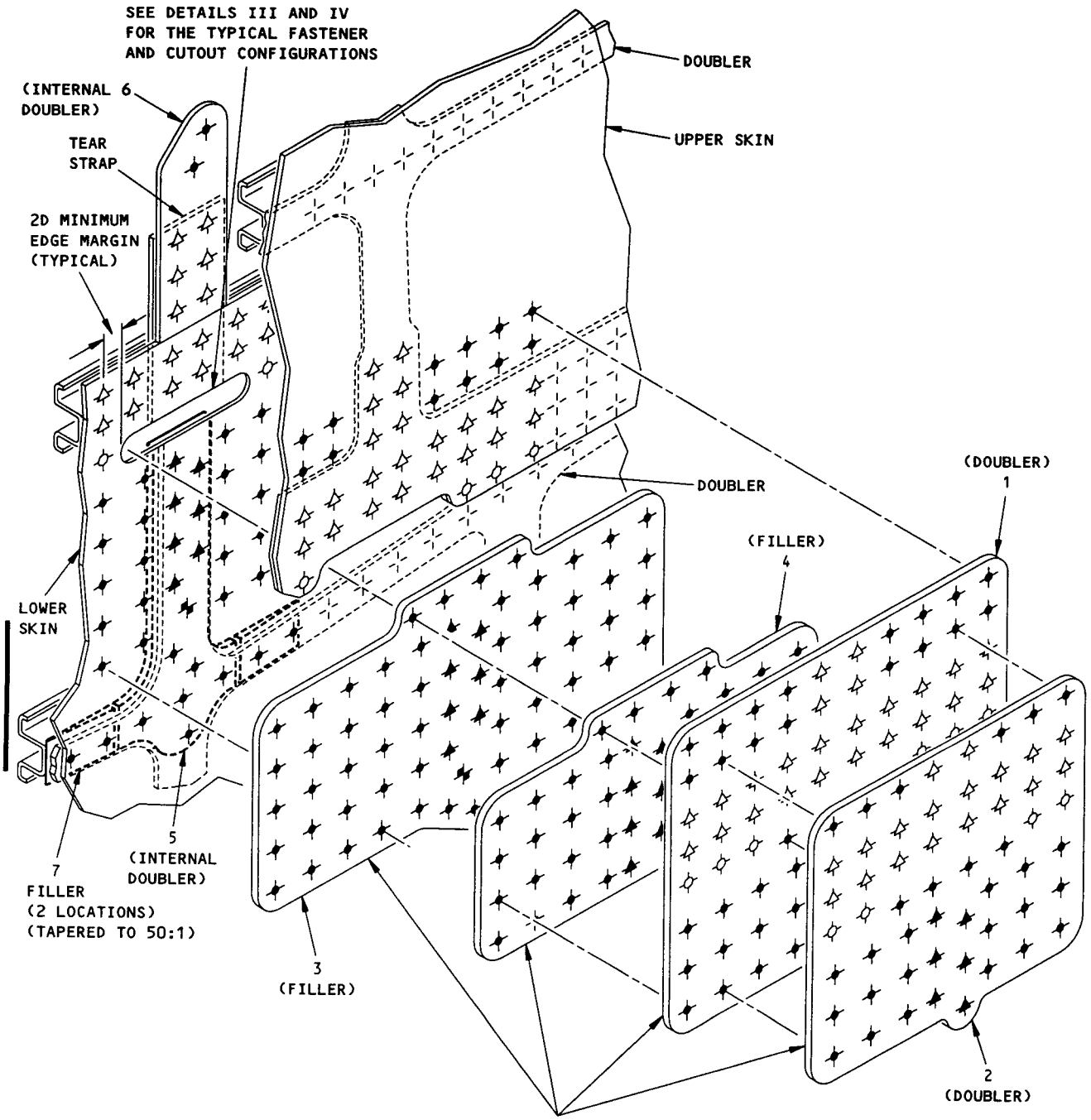

SEE DETAIL II FOR THE TYPICAL REPAIR SHOWN. SEE DETAILS V THRU XIV FOR THE TYPICAL REPAIRS AT ADJACENT TEAR STRAPS, SHEAR TIES, STRINGER S-10, AND BUTT JOINTS

SCHEMATIC OF REPAIR FOR A TYPICAL SKIN SECTION
DETAIL I

Fuselage Skin, Longitudinal Splice -
Repair for Damaged Lower Skin at the Longitudinal Lap Joint Lower Row
Figure 42 (Sheet 10)

BOEING PROPRIETARY - Copyright © - Unpublished Work - See title page for details.

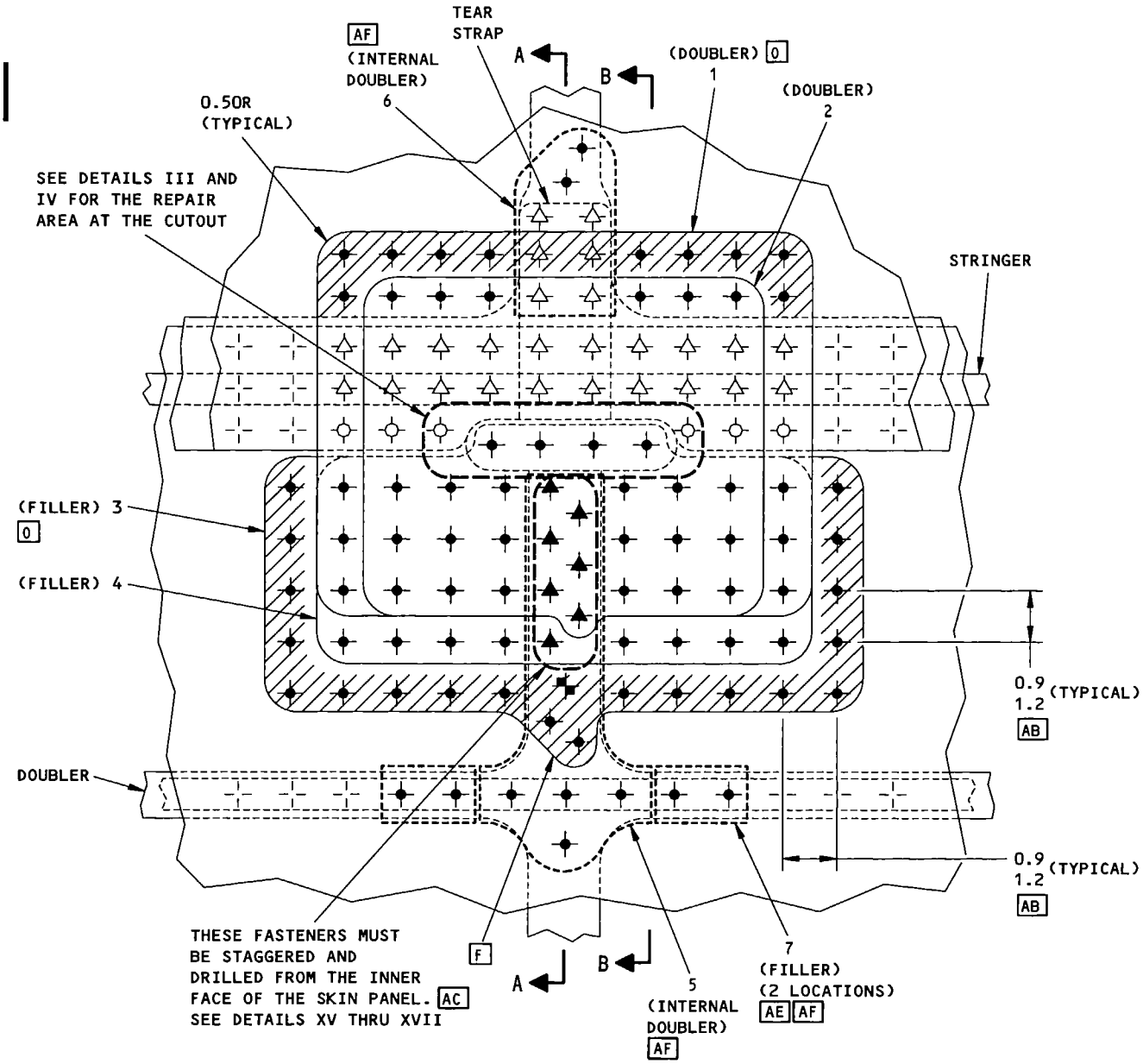

CRITICAL FASTENER ROW

SUBSEQUENT INSPECTIONS ARE NECESSARY FOR CATEGORY B AND C REPAIRS. REFER TO TABLE VII FOR CATEGORY B INSPECTION REQUIREMENTS. REFER TO TABLE VIII FOR CATEGORY C INSPECTION REQUIREMENTS

REPAIR AT A TEAR STRAP WITHOUT SHEAR TIES ATTACHED
(EXCEPT AT STRINGER S-10)
DETAIL II G H I W X Y

Fuselage Skin, Longitudinal Splice -
Repair for Damaged Lower Skin at the Longitudinal Lap Joint Lower Row
Figure 42 (Sheet 11)

BOEING PROPRIETARY - Copyright © - Unpublished Work - See title page for details.

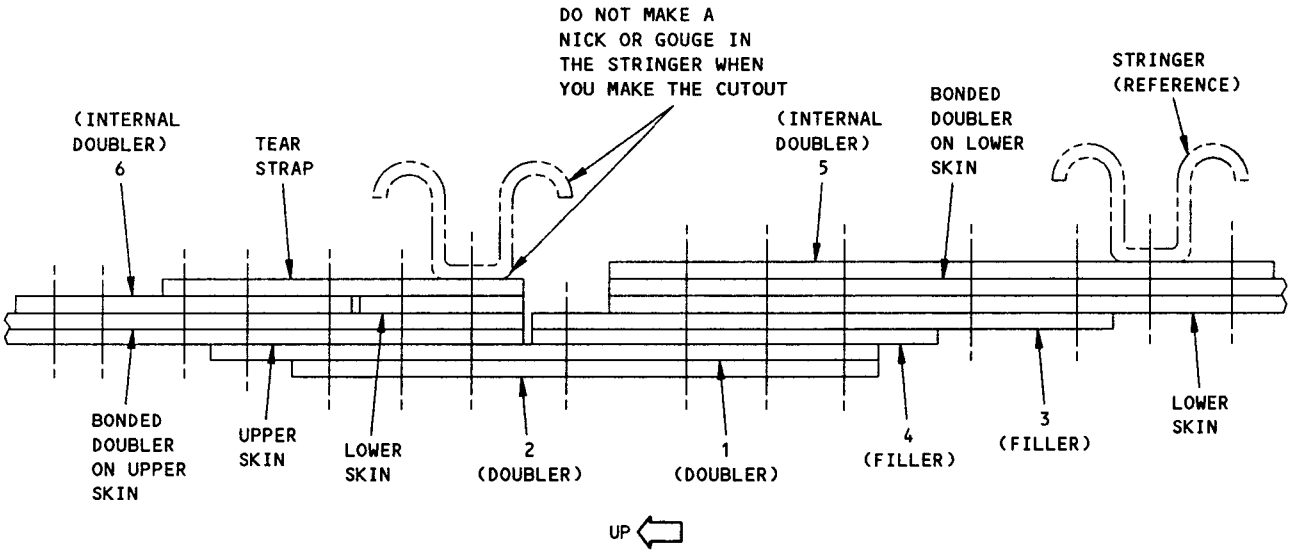

THE TYPICAL SECTION IS SHOWN FOR ALL REPAIRS
ROTATED 90°

SECTION A-A

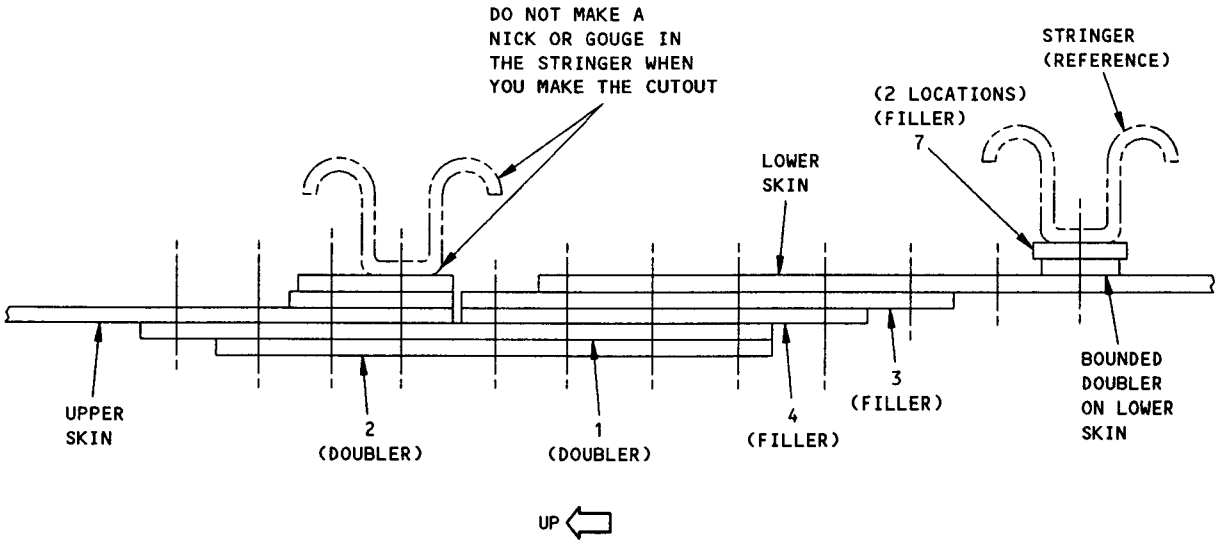

A TYPICAL SECTION IS SHOWN, BUT SECTION AT STRINGER S-10 IS NOT SHOWN
ROTATED 90°

5 (INTERNAL DOUBLER) AND 7 (FILLERS) ARE NOT USED ON S-10 REPAIRS)
SECTION B-B

Fuselage Skin, Longitudinal Splice -
Repair for Damaged Lower Skin at the Longitudinal Lap Joint Lower Row
Figure 42 (Sheet 12)

G76785

BOEING PROPRIETARY - Copyright © - Unpublished Work - See title page for details.

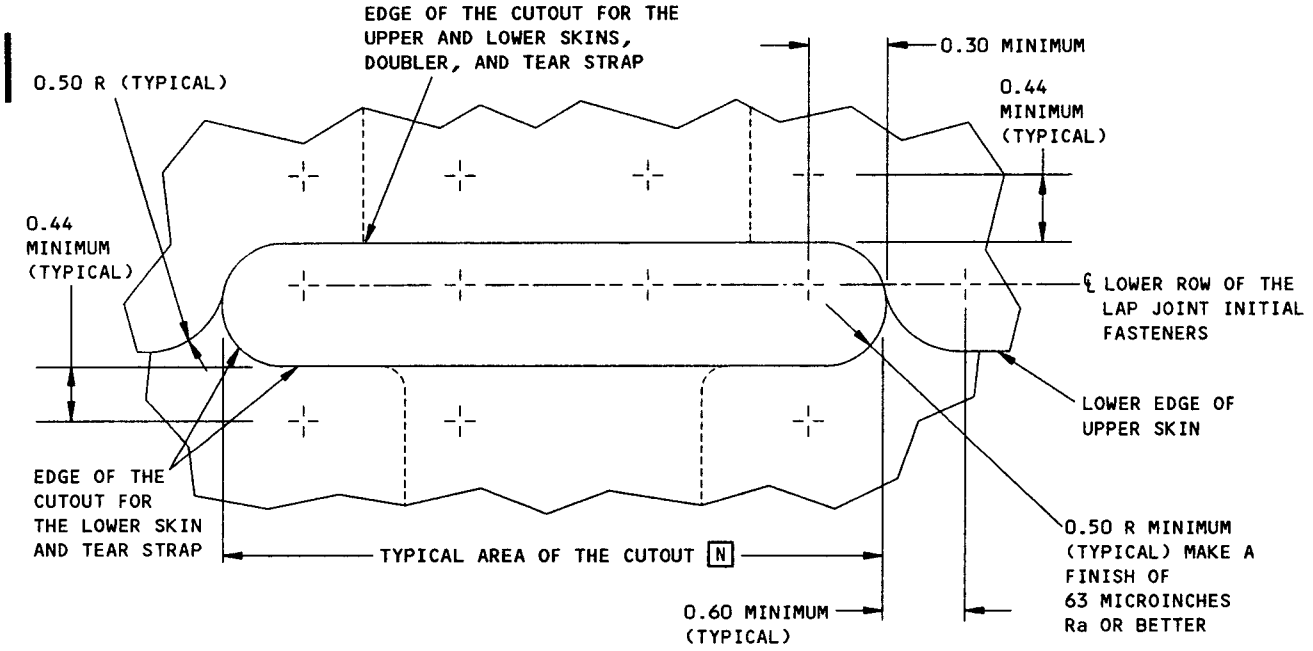

TYPICAL CUTOUT CONFIGURATION WITHOUT SHEAR TIE ATTACHMENT

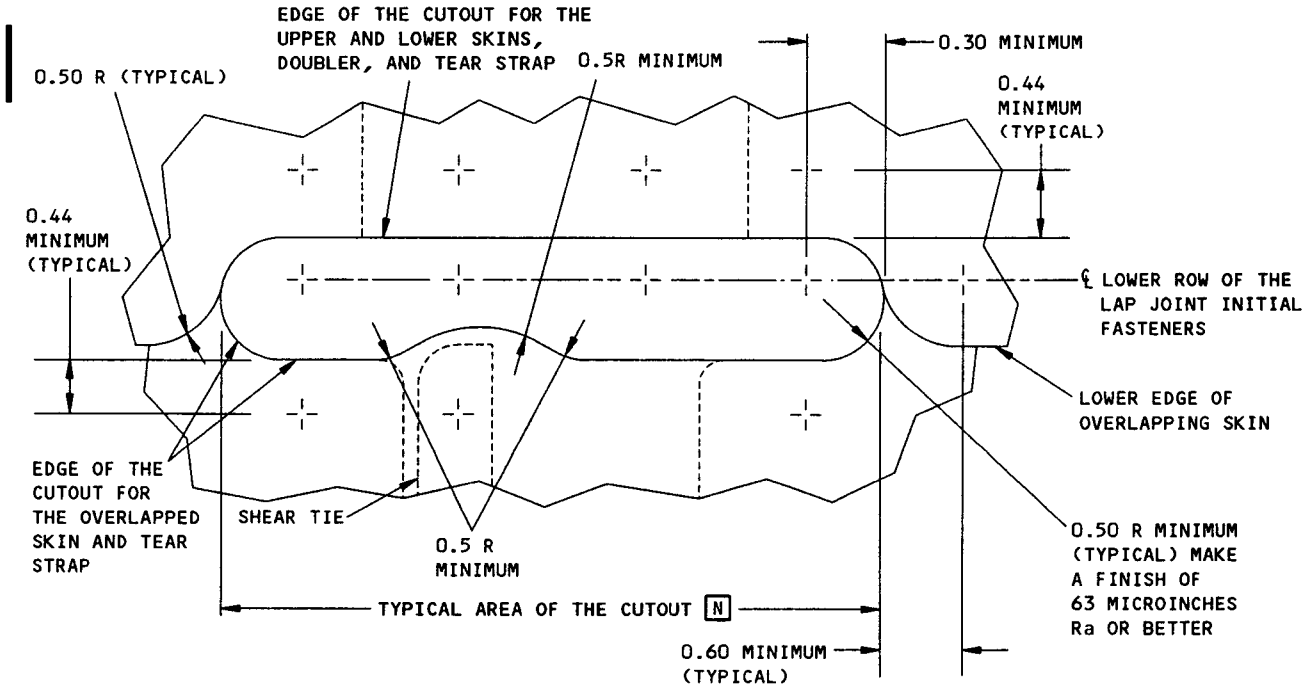

TYPICAL CUTOUT CONFIGURATION WITH SHEAR TIE ATTACHMENT
DETAIL III

Fuselage Skin, Longitudinal Splice -
Repair for Damaged Lower Skin at the Longitudinal Lap Joint Lower Row
Figure 42 (Sheet 13)

BOEING PROPRIETARY - Copyright © - Unpublished Work - See title page for details.

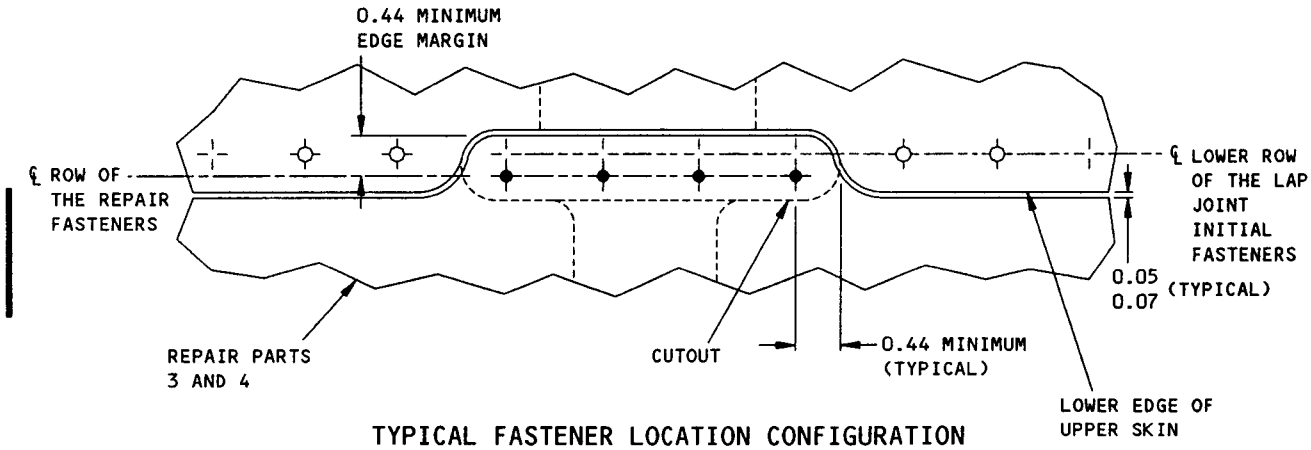

TYPICAL FASTENER LOCATION CONFIGURATION
DETAIL IV

Fuselage Skin, Longitudinal Splice -
Repair for Damaged Lower Skin at the Longitudinal Lap Joint Lower Row
Figure 42 (Sheet 14)

BOEING PROPRIETARY - Copyright © - Unpublished Work - See title page for details.

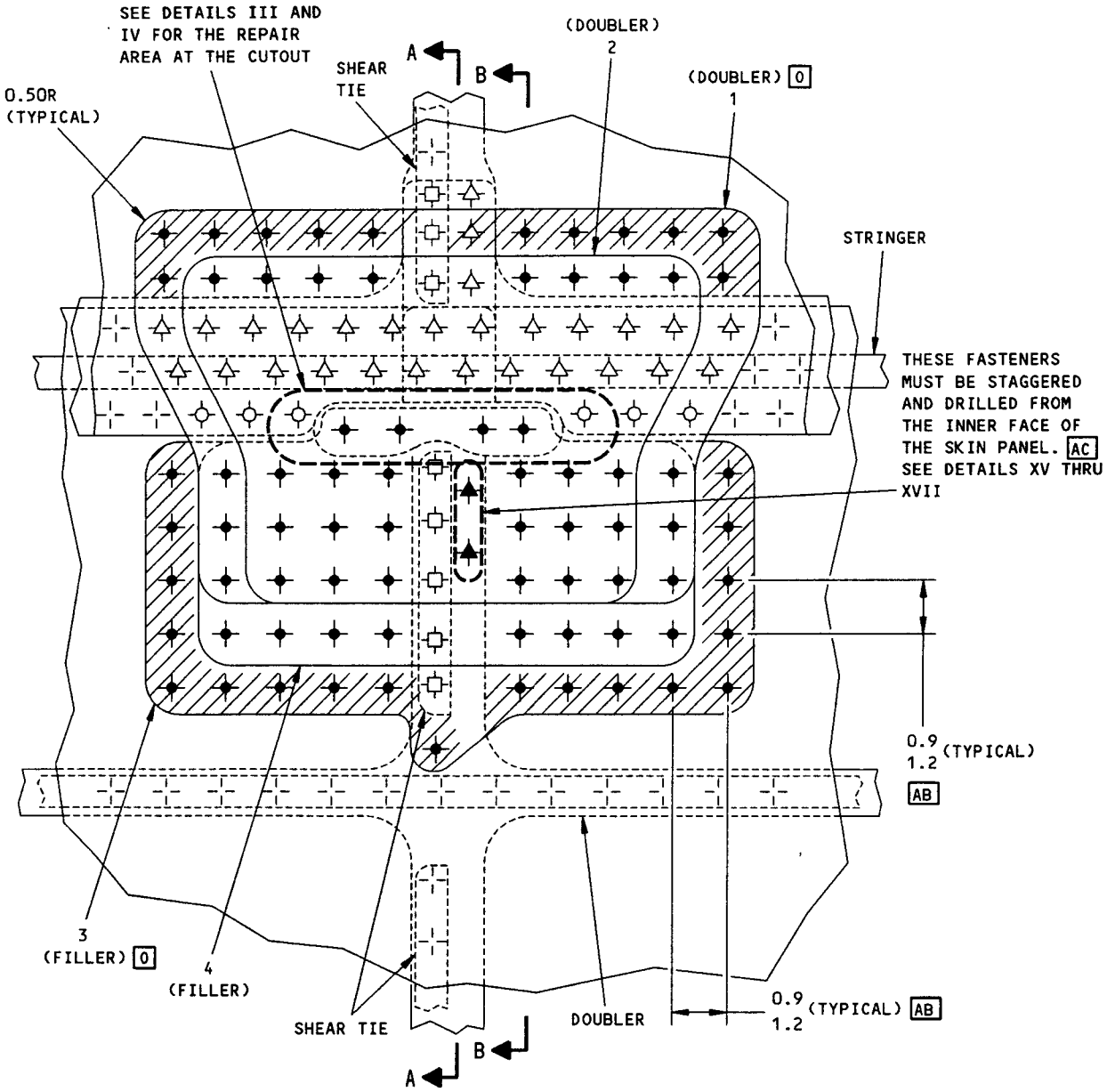

CRITICAL FASTENER ROW

NOTE: SEE DETAIL II FOR SECTIONS A-A AND B-B.

SUBSEQUENT INSPECTIONS ARE NECESSARY FOR CATEGORY B AND C REPAIRS. REFER TO TABLE VII FOR CATEGORY B INSPECTION REQUIREMENTS. REFER TO TABLE VIII FOR CATEGORY C INSPECTION REQUIREMENTS

REPAIR AT A TEAR STRAP WITH ONE-ROW SHEAR TIE ATTACHMENT
(EXCEPT AT STRINGER S-10)
DETAIL V G H I W X Y

Fuselage Skin, Longitudinal Splice -
Repair for Damaged Lower Skin at the Longitudinal Lap Joint Lower Row
Figure 42 (Sheet 15)

BOEING PROPRIETARY - Copyright © - Unpublished Work - See title page for details.

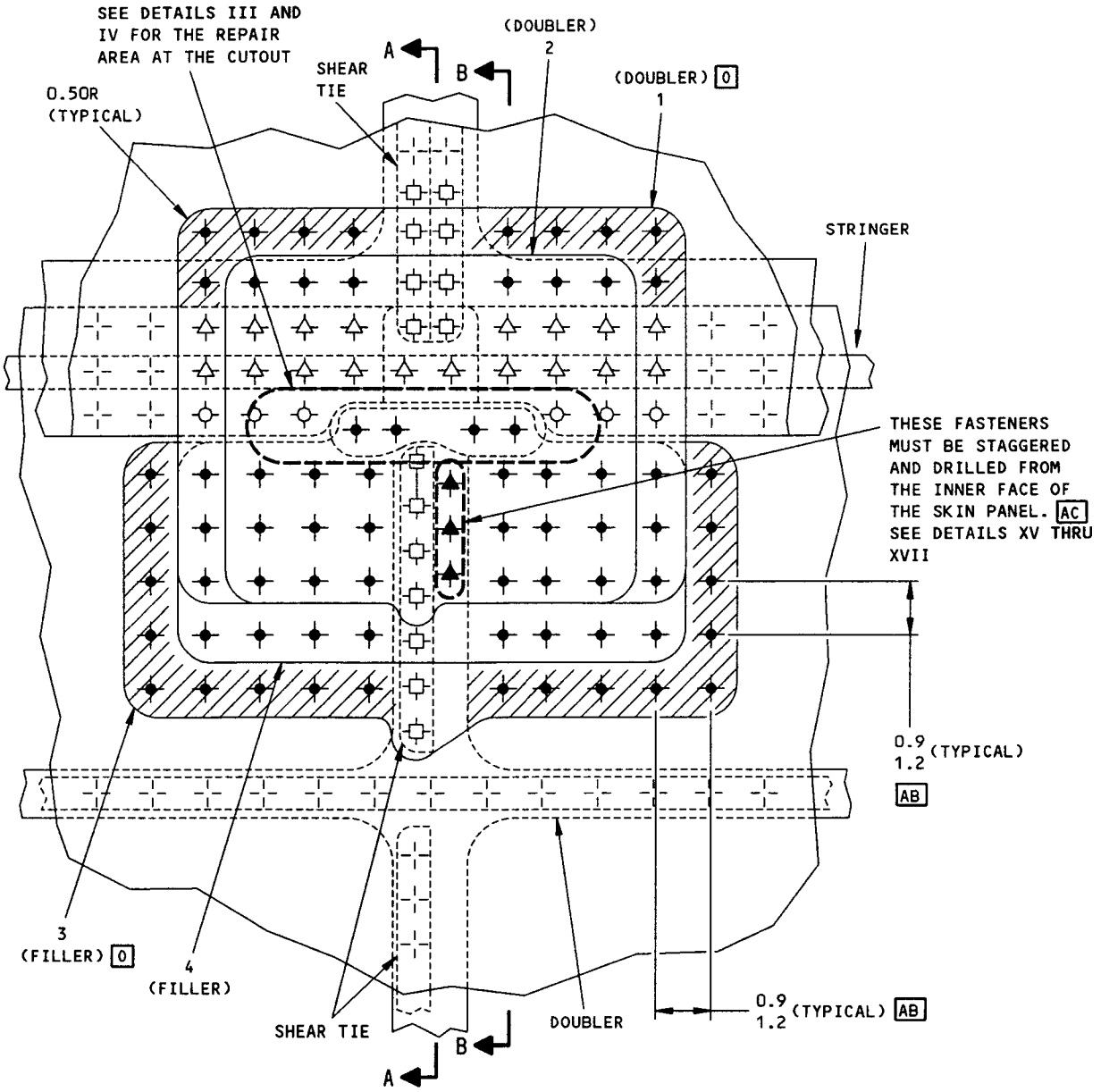

CRITICAL FASTENER ROW

NOTE: SEE DETAIL II FOR SECTIONS A-A AND B-B.

SUBSEQUENT INSPECTIONS ARE NECESSARY FOR CATEGORY B AND C REPAIRS. REFER TO TABLE VII FOR CATEGORY B INSPECTION REQUIREMENTS. REFER TO TABLE VIII FOR CATEGORY C INSPECTION REQUIREMENTS

REPAIR AT A TEAR STRAP WITH A TWO-ROW SHEAR TIE ATTACHMENT
(EXCEPT AT STRINGER S-10)
DETAIL VI G H I W X Y

Fuselage Skin, Longitudinal Splice -
Repair for Damaged Lower Skin at the Longitudinal Lap Joint Lower Row
Figure 42 (Sheet 16)

G76825

BOEING PROPRIETARY - Copyright © - Unpublished Work - See title page for details.

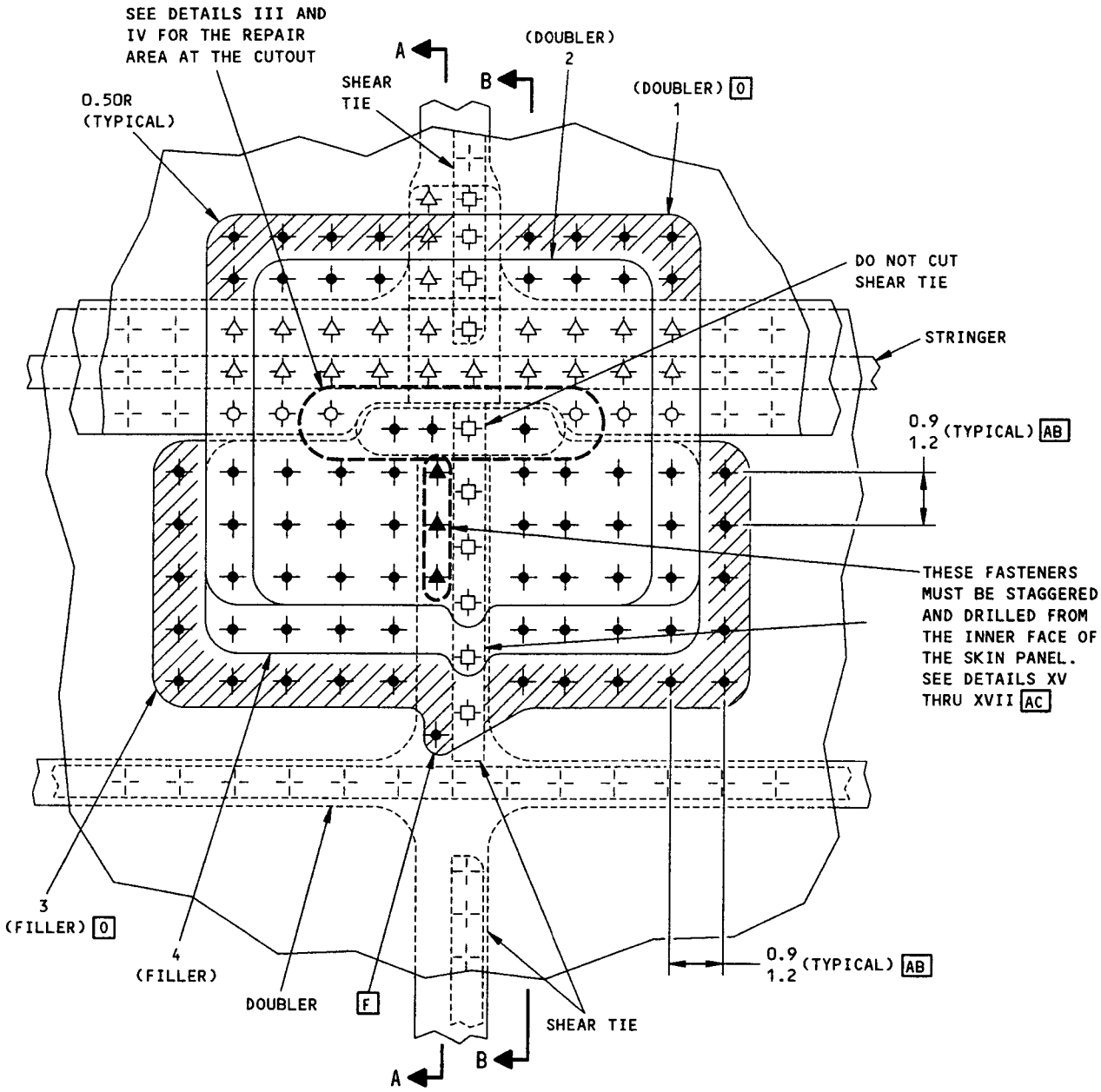

CRITICAL FASTENER ROW

NOTE: SEE DETAIL II FOR SECTIONS A-A AND B-B.

SUBSEQUENT INSPECTIONS ARE NECESSARY FOR CATEGORY B AND C REPAIRS. REFER TO TABLE VII FOR CATEGORY B INSPECTION REQUIREMENTS. REFER TO TABLE VIII FOR CATEGORY C INSPECTION REQUIREMENTS

REPAIR AT A TEAR STRAP WITH A SHEAR TIE THAT EXTENDS INTO THE DAMAGE CUTOUT AREA OF THE LAP SPLICE (EXCEPT AT STRINGER S-10)
DETAIL VII [G] [H] [I] [W] [X] [Y]

Fuselage Skin, Longitudinal Splice -
Repair for Damaged Lower Skin at the Longitudinal Lap Joint Lower Row
Figure 42 (Sheet 17)

BOEING PROPRIETARY - Copyright © - Unpublished Work - See title page for details.

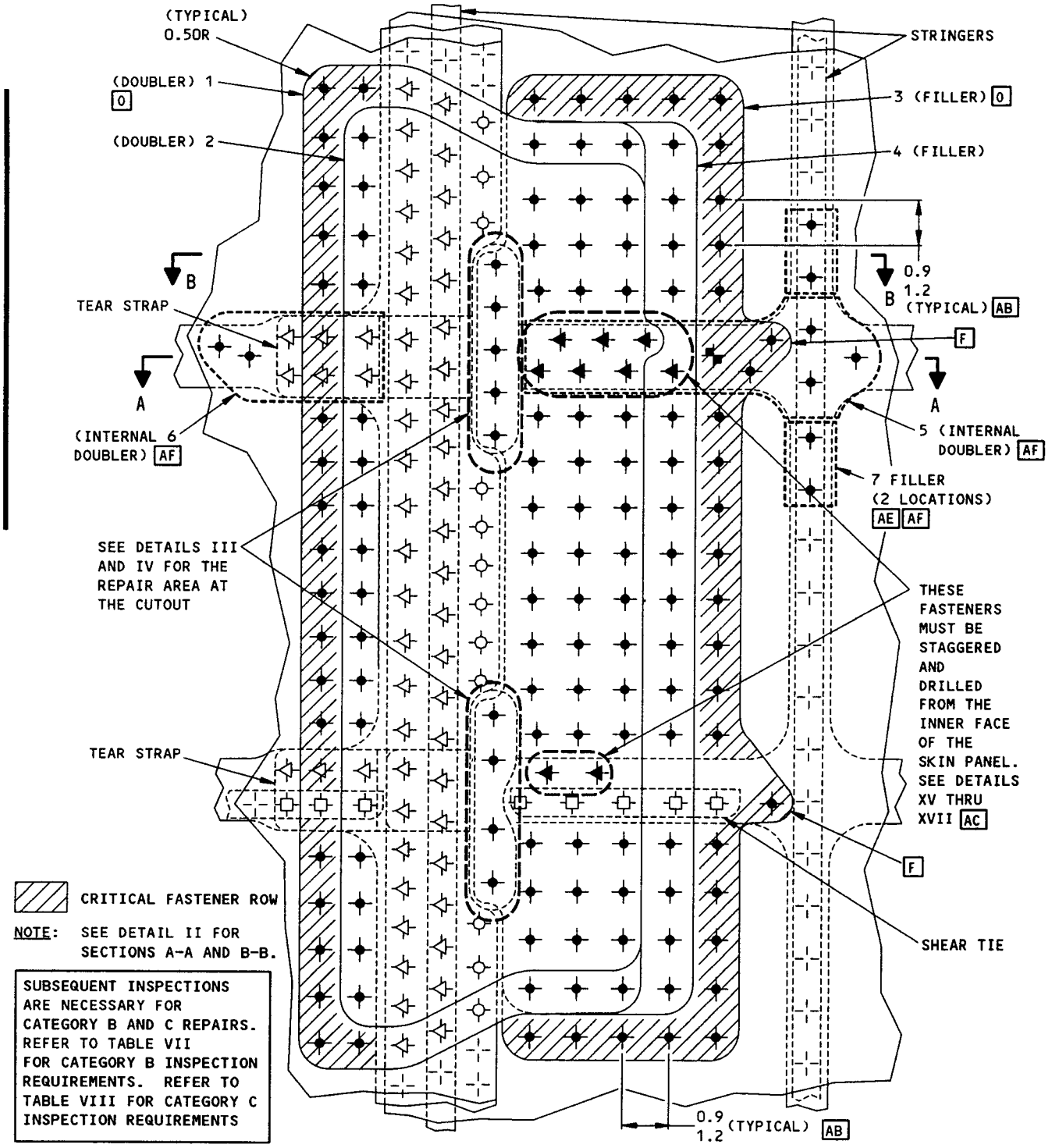

REPAIR FOR ADJACENT TEAR STRAP AREAS (NOT APPLICABLE TO STRINGER S-10)
ROTATED 90 DEGREES
DETAIL VIII G H I W X Y
Fuselage Skin, Longitudinal Splice -
Repair for Damaged Lower Skin at the Longitudinal Lap Joint Lower Row
Figure 42 (Sheet 18)

BOEING PROPRIETARY - Copyright © - Unpublished Work - See title page for details.

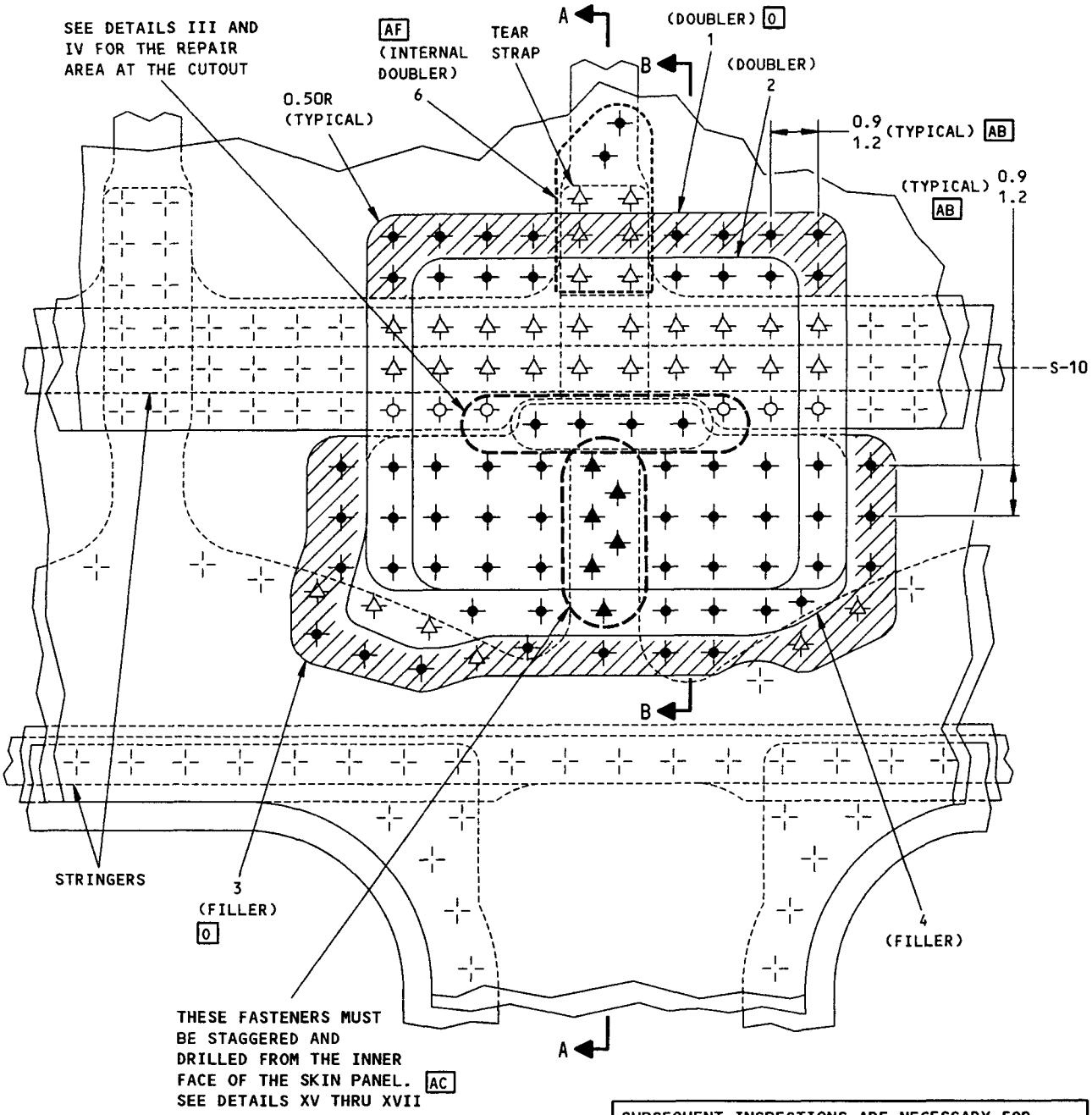

CRITICAL FASTENER ROW

NOTE: SEE DETAIL II FOR SECTION A-A AND B-B.

SUBSEQUENT INSPECTIONS ARE NECESSARY FOR CATEGORY B AND C REPAIRS. REFER TO TABLE VII FOR CATEGORY B INSPECTION REQUIREMENTS. REFER TO TABLE VIII FOR CATEGORY C INSPECTION REQUIREMENTS.

REPAIR FOR A TEAR STRAP AREA AT A STRINGER S-10
(REPAIR 1 BETWEEN WINDOW FRAMES)
DETAIL IX G H I W X AA

Fuselage Skin, Longitudinal Splice -
Repair for Damaged Lower Skin at the Longitudinal Lap Joint Lower Row
Figure 42 (Sheet 19)

BOEING PROPRIETARY - Copyright © - Unpublished Work - See title page for details.

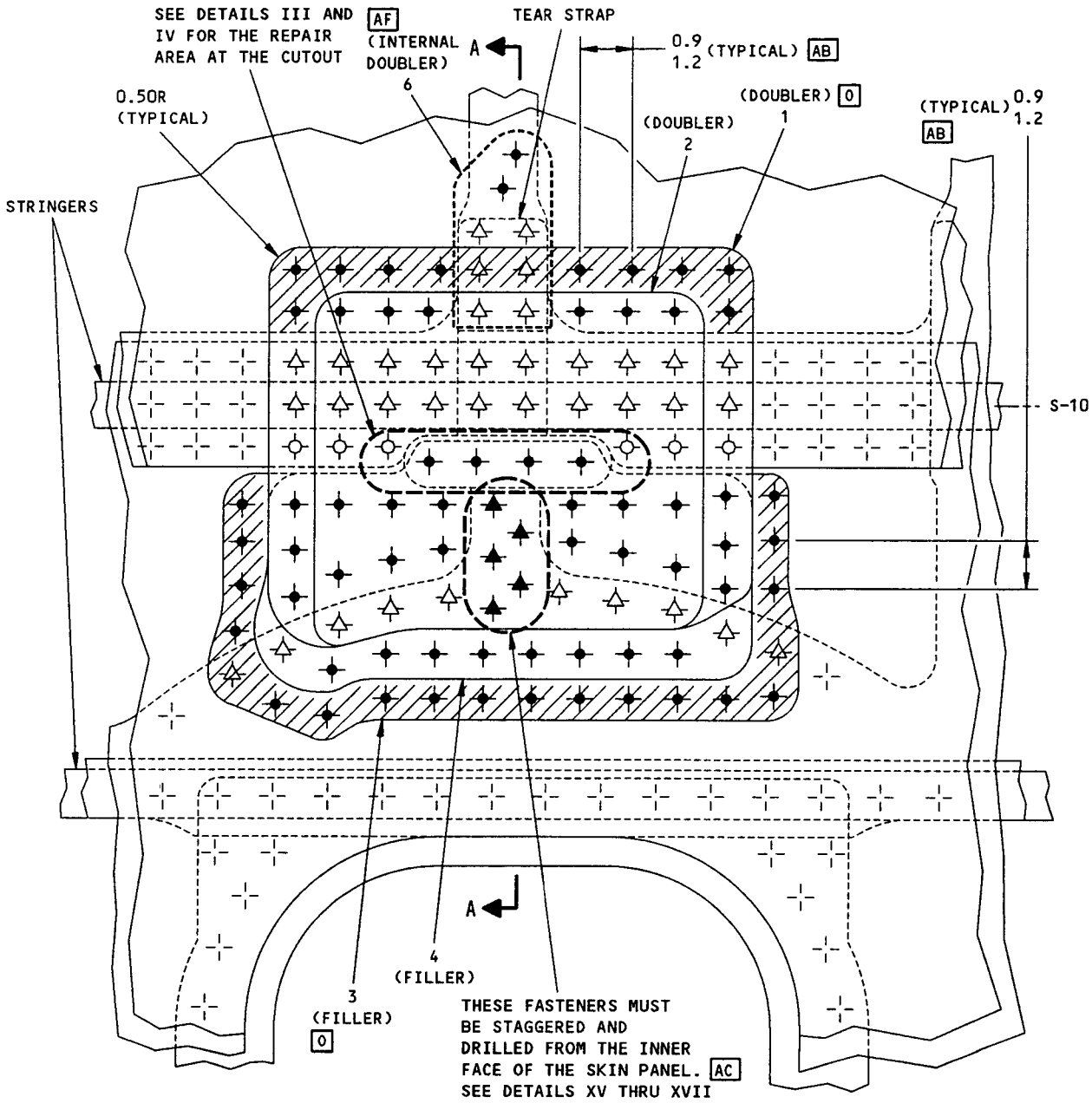

CRITICAL FASTENER ROW

NOTE: SEE DETAIL II FOR SECTION A-A.

SUBSEQUENT INSPECTIONS ARE NECESSARY FOR CATEGORY B AND C REPAIRS. REFER TO TABLE VII FOR CATEGORY B INSPECTION REQUIREMENTS. REFER TO TABLE VIII FOR CATEGORY C INSPECTION REQUIREMENTS.

REPAIR FOR TEAR STRAP AREA AT STRINGER S-10
(REPAIR 2 ABOVE WINDOW FRAME)
DETAIL X G H I W X AA

Fuselage Skin, Longitudinal Splice -
Repair for Damaged Lower Skin at the Longitudinal Lap Joint Lower Row
Figure 42 (Sheet 20)

K73042

BOEING PROPRIETARY - Copyright © - Unpublished Work - See title page for details.

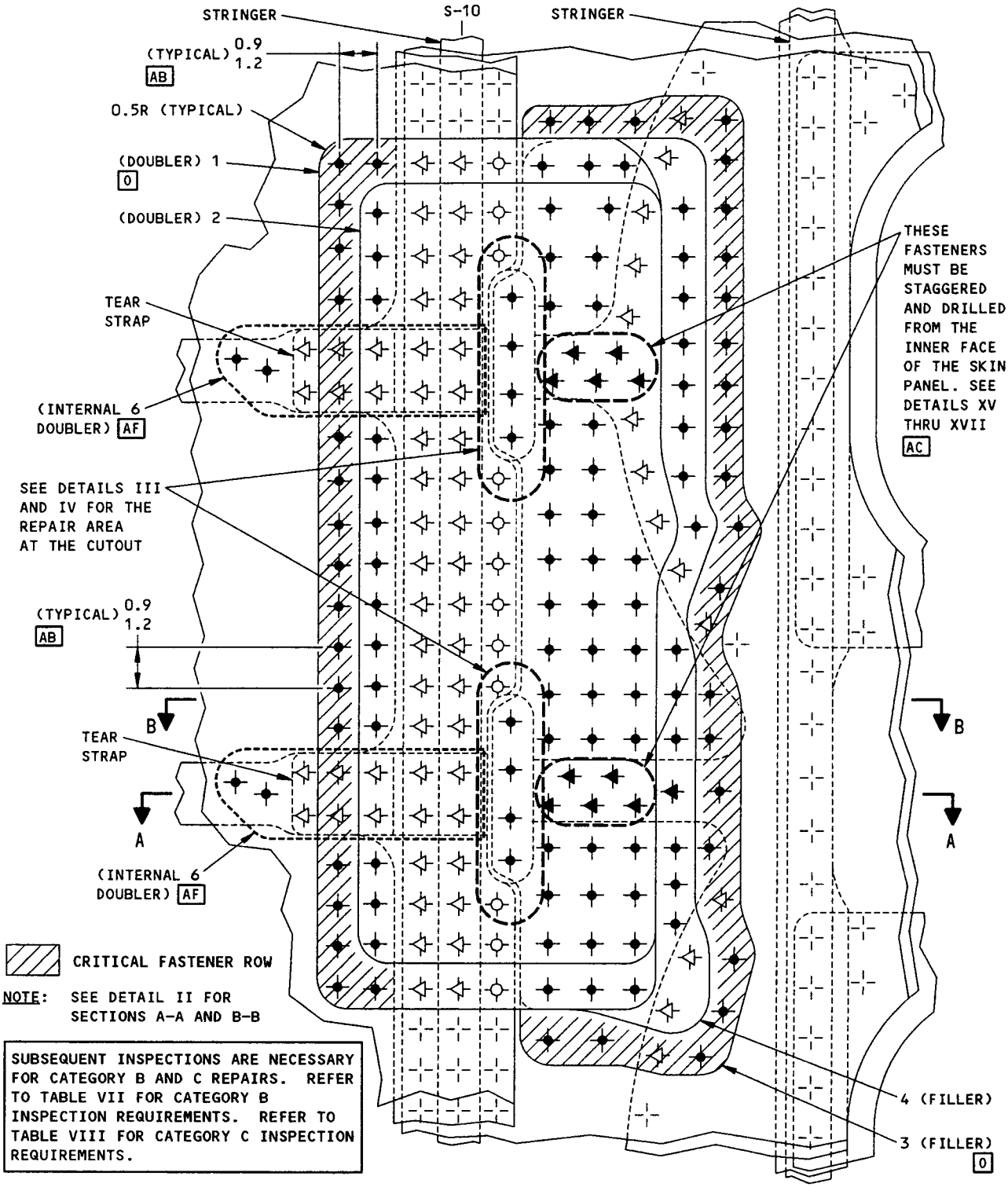

REPAIR FOR ADJACENT TEAR STRAP AREAS AT STRINGER S-10 (ROTATED 90 DEGREES)
DETAIL XI G I W X AA
Fuselage Skin, Longitudinal Splice -
Repair for Damaged Lower Skin at the Longitudinal Lap Joint Lower Row
Figure 42 (Sheet 21)

BOEING PROPRIETARY - Copyright © - Unpublished Work - See title page for details.

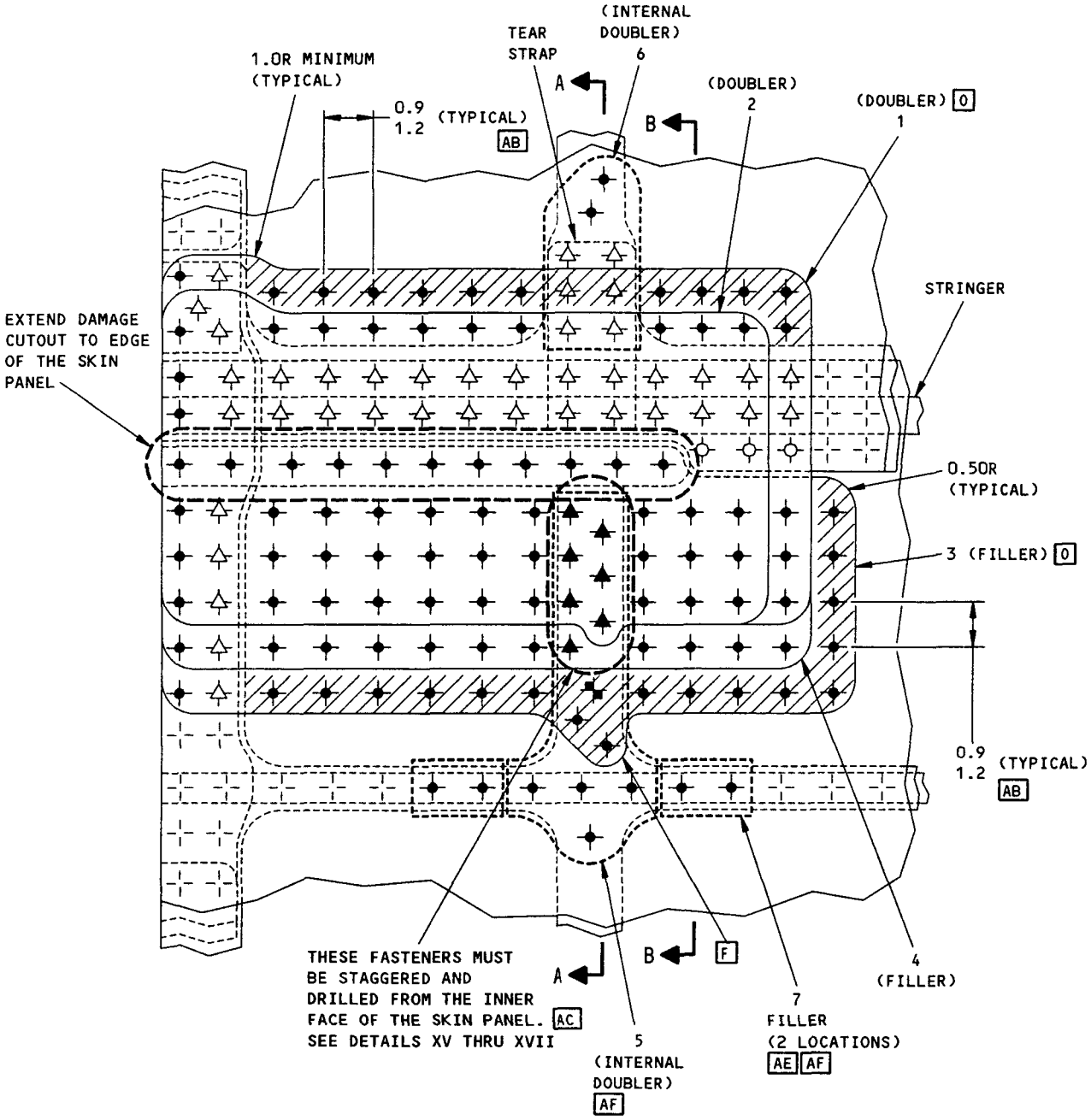

CRITICAL FASTENER ROW

NOTE: SEE DETAIL II FOR SECTIONS A-A AND B-B.

SUBSEQUENT INSPECTIONS ARE NECESSARY FOR CATEGORY B AND C REPAIRS. REFER TO TABLE VII FOR CATEGORY B INSPECTION REQUIREMENTS. REFER TO TABLE VIII FOR CATEGORY C INSPECTION REQUIREMENTS.

REPAIR FOR DAMAGE ADJACENT TO A BUTT SPLICE
DETAIL XII G H I W X Z
Fuselage Skin, Longitudinal Splice -
Repair for Damaged Lower Skin at the Longitudinal Lap Joint Lower Row
Figure 42 (Sheet 22)

BOEING PROPRIETARY - Copyright © - Unpublished Work - See title page for details.

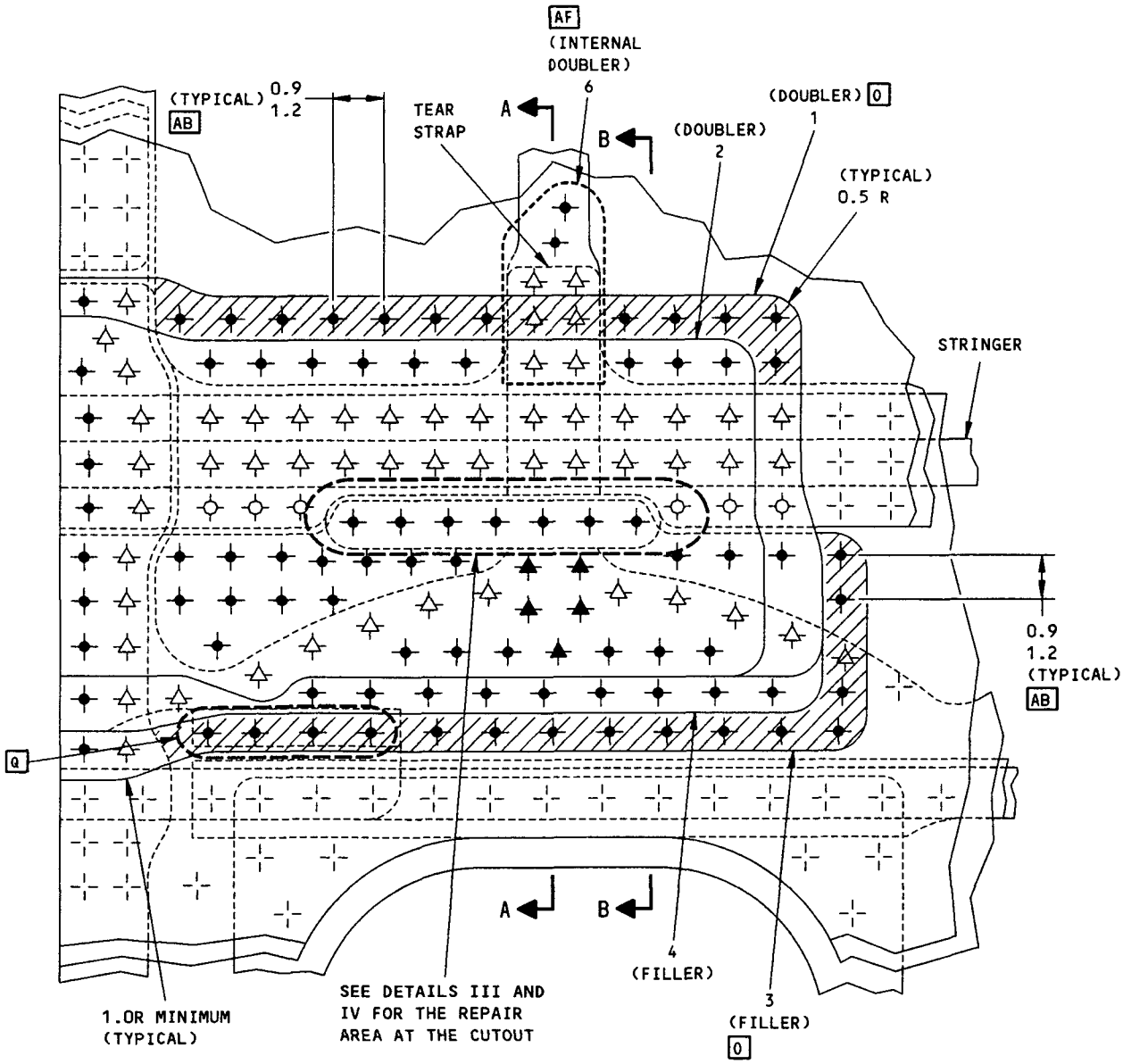

CRITICAL FASTENER ROW

NOTE: SEE DETAIL II FOR SECTIONS A-A AND B-B.

SUBSEQUENT INSPECTIONS ARE NECESSARY FOR CATEGORY B AND C REPAIRS. REFER TO TABLE VII FOR CATEGORY B INSPECTION REQUIREMENTS. REFER TO TABLE VIII FOR CATEGORY C INSPECTION REQUIREMENTS.

REPAIR FOR ADJACENT TEAR STRAP AREA NEAR A BUTT SPLICE
(IN AREAS OF REDUCED STRINGER SPACING)
DETAIL XIII G H I W X Z

Fuselage Skin, Longitudinal Splice -
Repair for Damaged Lower Skin at the Longitudinal Lap Joint Lower Row
Figure 42 (Sheet 23)

BOEING PROPRIETARY - Copyright © - Unpublished Work - See title page for details.

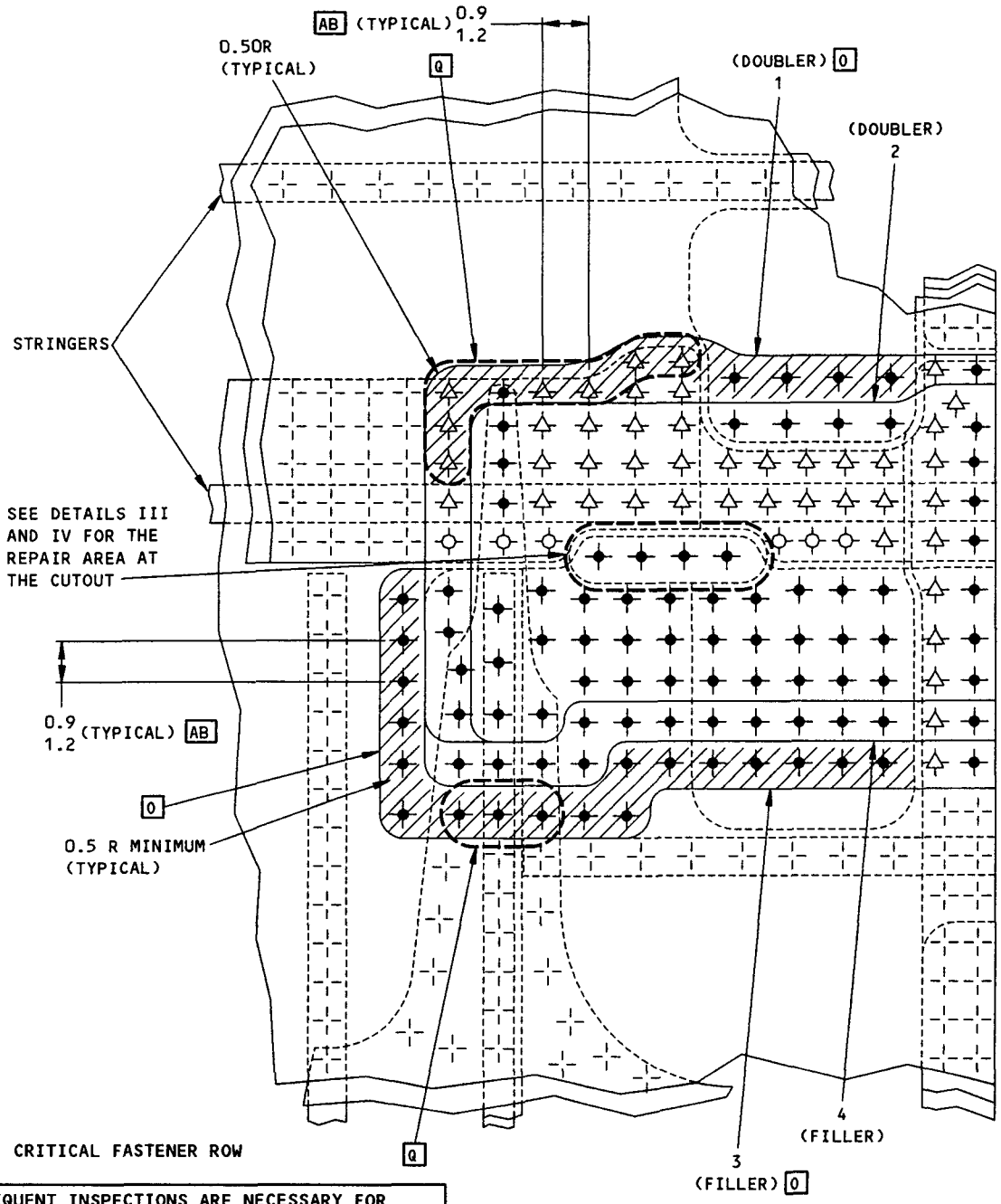

SUBSEQUENT INSPECTIONS ARE NECESSARY FOR CATEGORY B AND C REPAIRS. REFER TO TABLE VII FOR CATEGORY B INSPECTION REQUIREMENTS. REFER TO TABLE VIII FOR CATEGORY C INSPECTION REQUIREMENTS.

REPAIR FOR DAMAGE NEAR A BUTT SPLICE AND NON-TYPICAL STRUCTURE G H I W X Z
DETAIL XIV

Fuselage Skin, Longitudinal Splice -
Repair for Damaged Lower Skin at the Longitudinal Lap Joint Lower Row
Figure 42 (Sheet 24)

BOEING PROPRIETARY - Copyright © - Unpublished Work - See title page for details.

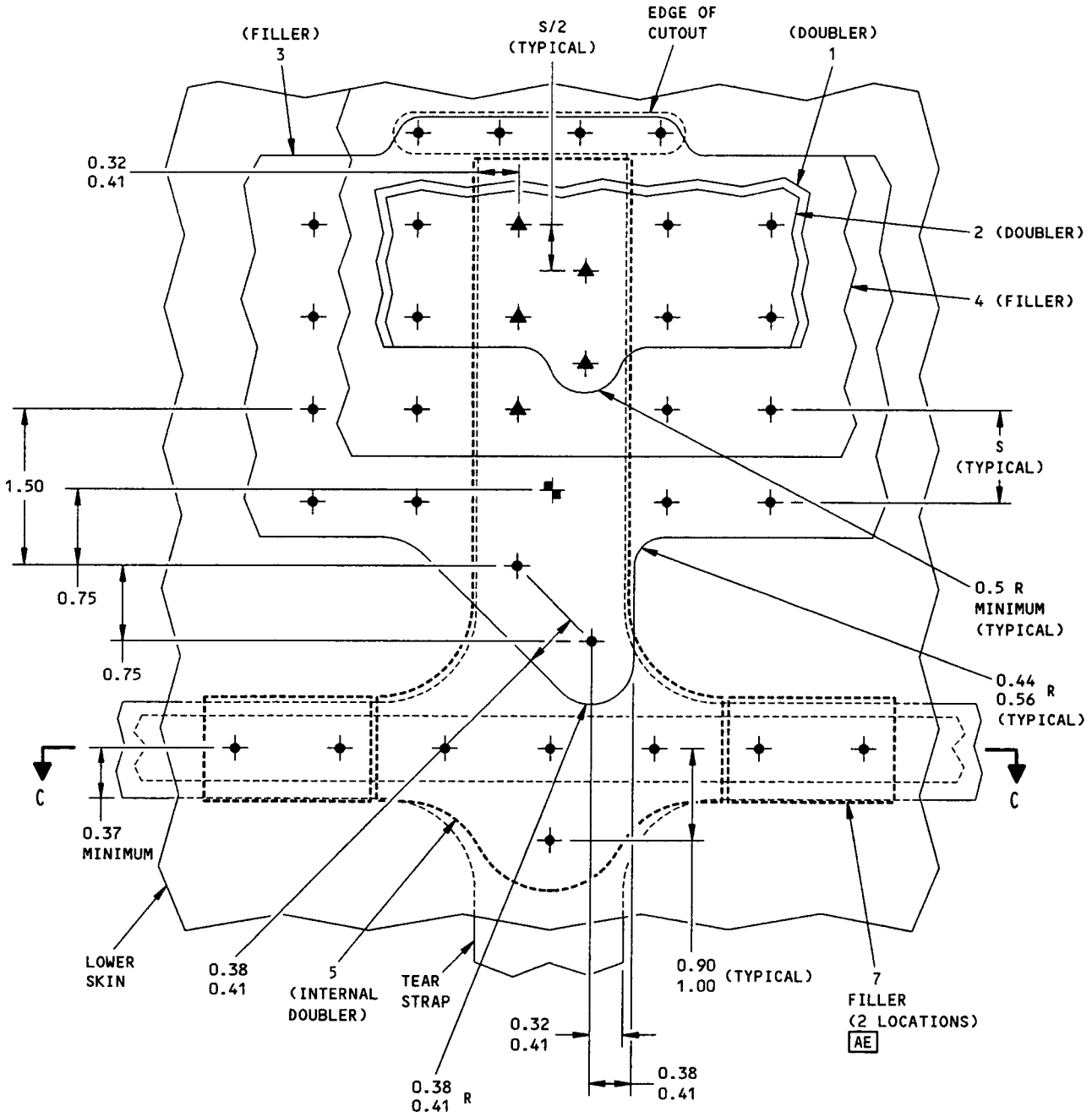

BOTTOM TAB GEOMETRY AND FASTENER LOCATIONS THROUGH A TEAR STRAP WITH NO SHEAR TIE
DETAIL XV M

Fuselage Skin, Longitudinal Splice -
Repair for Damaged Lower Skin at the Longitudinal Lap Joint Lower Row
Figure 42 (Sheet 25)

BOEING PROPRIETARY - Copyright © - Unpublished Work - See title page for details.

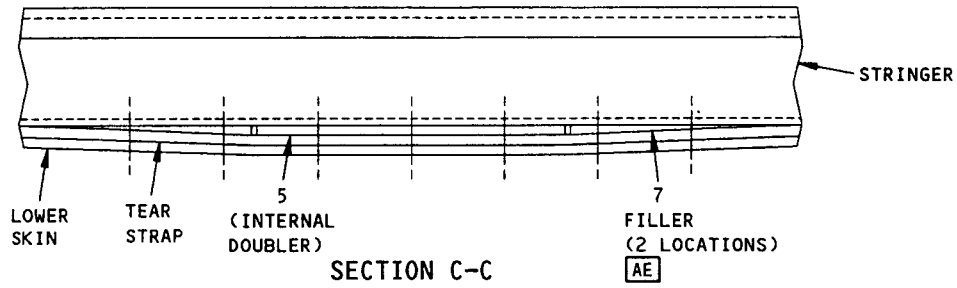

SECTION C-C

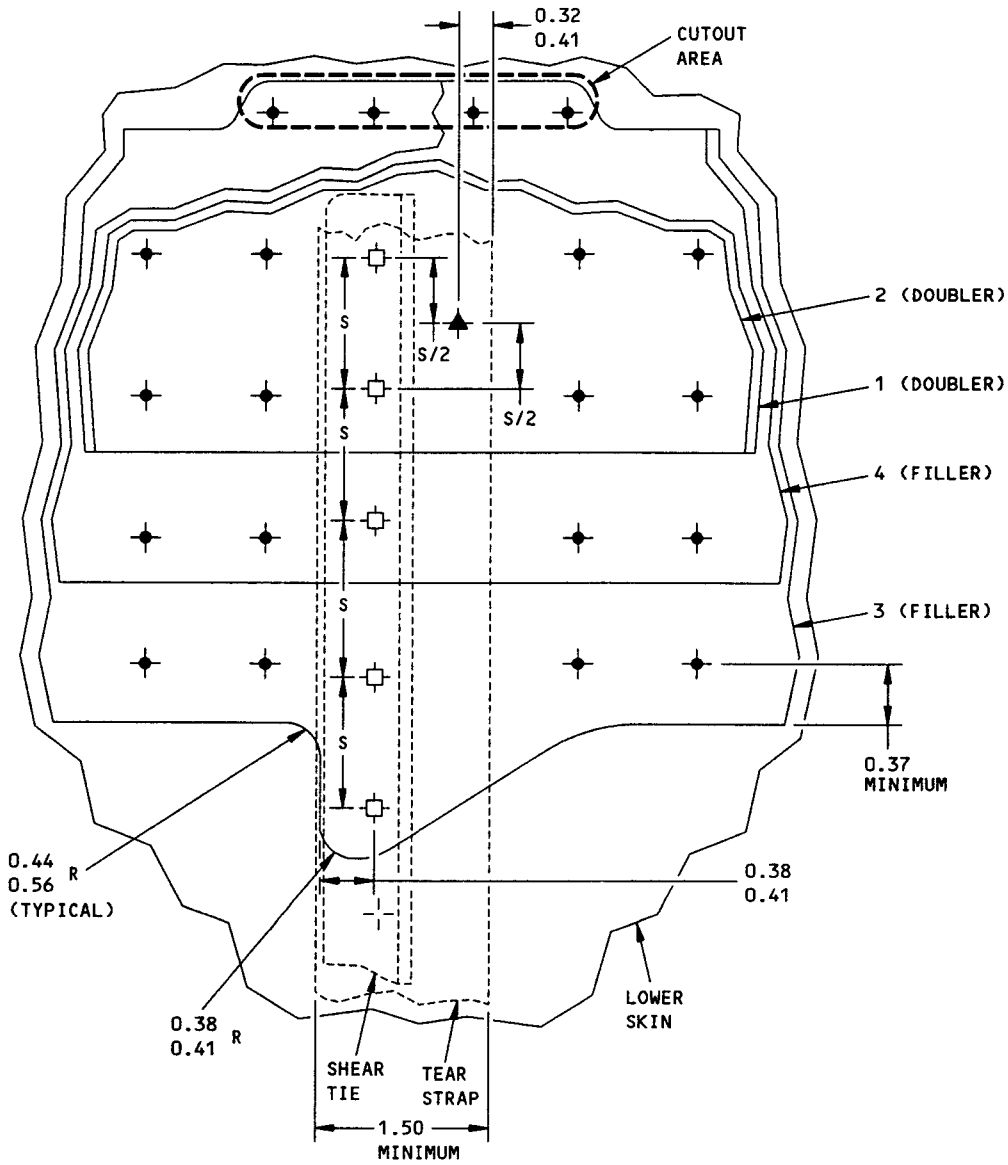

BOTTOM TAB GEOMETRY AND FASTENER LOCATIONS THROUGH A TEAR STRAP THAT IS 1.50 WIDE OR MORE WITH A SHEAR TIE

DETAIL XVI M

Fuselage Skin, Longitudinal Splice -
Repair for Damaged Lower Skin at the Longitudinal Lap Joint Lower Row
Figure 42 (Sheet 26)

BOEING PROPRIETARY - Copyright © - Unpublished Work - See title page for details.

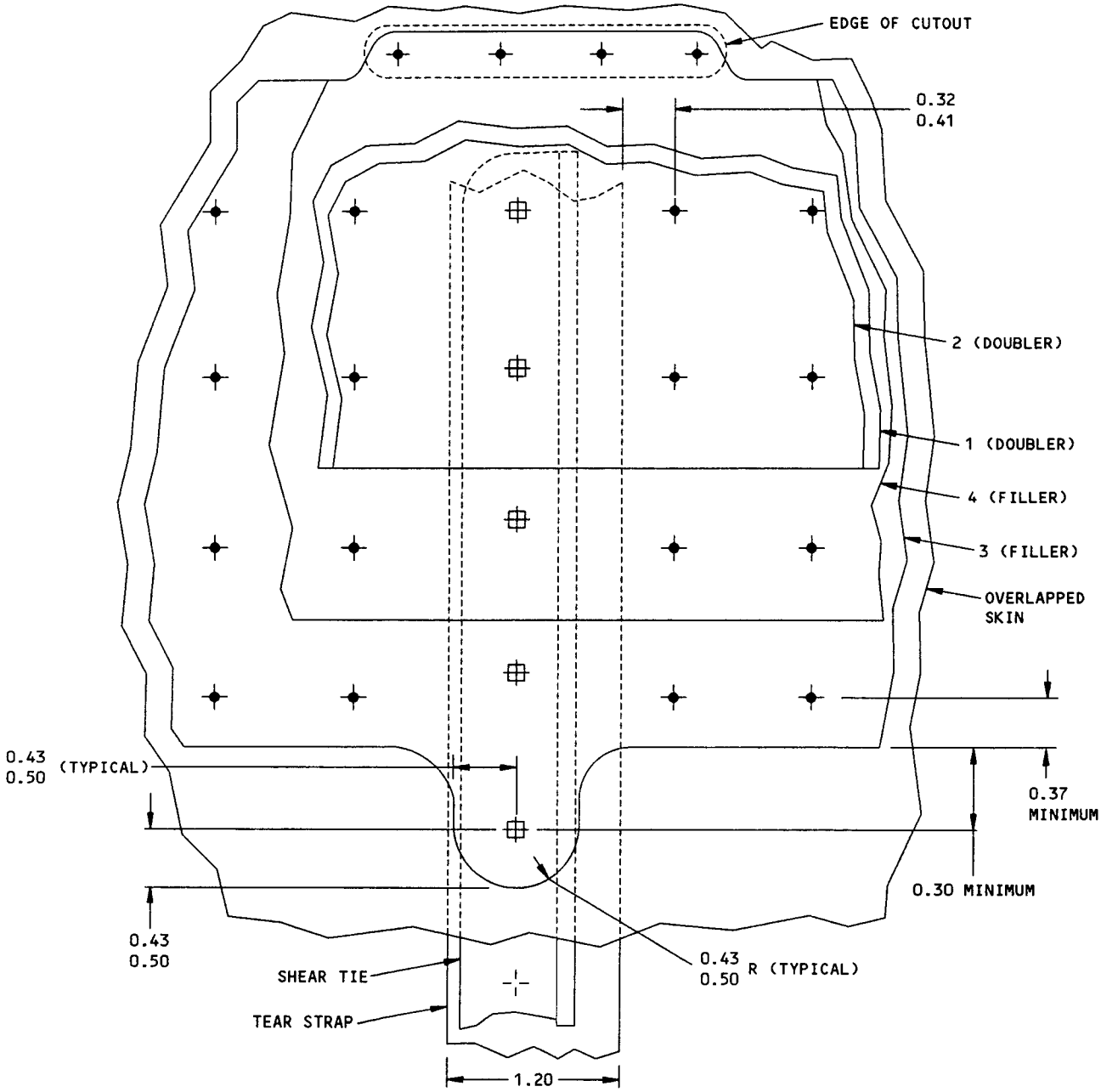

BOTTOM TAB GEOMETRY AND FASTENER LOCATIONS
AT A TEAR STRAP THAT IS 1.20 WIDE
WITH A SHEAR TIE (IN SECTION 41 ONLY)
DETAIL XVII [M]

Fuselage Skin, Longitudinal Splice -
Repair for Damaged Lower Skin at the Longitudinal Lap Joint Lower Row
Figure 42 (Sheet 27)

BOEING PROPRIETARY - Copyright © - Unpublished Work - See title page for details.

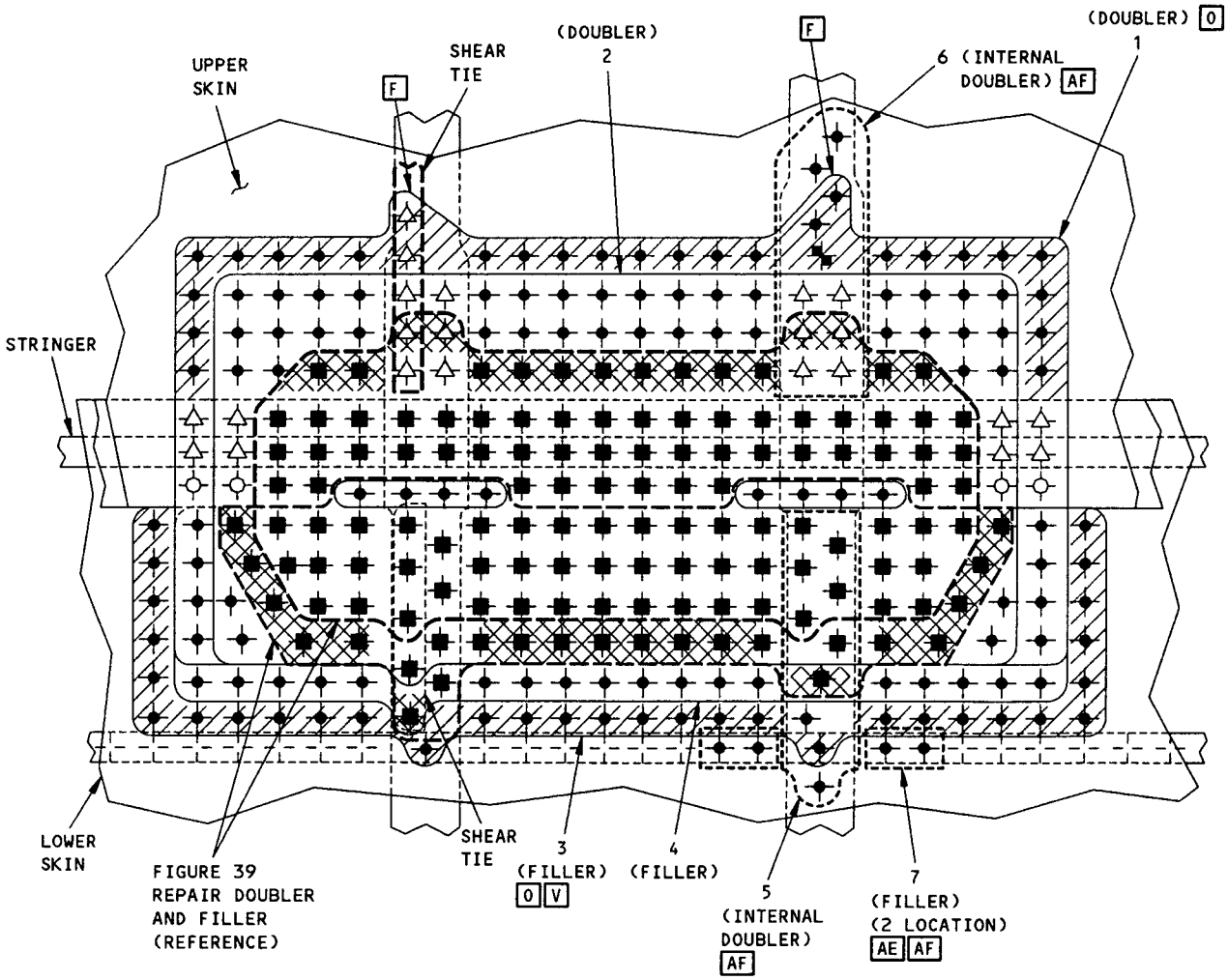

CRITICAL FASTENER ROW

FASTENERS TO INSPECT PER DETAILS XIX AND XX. REFERENCE FROM PROCEDURE IV, STEP 3.

SUBSEQUENT INSPECTIONS ARE NECESSARY FOR CATEGORY B REPAIRS. REFER TO TABLE VII FOR INSPECTION REQUIREMENTS.

NOTE: THE REPAIR CONFIGURATION SHOWN IS FOR REPLACEMENT OF A FIGURE 39 REPAIR AT A GENERIC LOCATION. REPAIRS AT OTHER STRINGERS MAY BE DIFFERENT. USE DETAILS V THROUGH XIV AS A GUIDE OR CONTACT BOEING. WHEN LAYING OUT A REPAIR, EXTEND THE FIGURE 42 FILLERS AND DOUBLERS ABOVE, BELOW, FORWARD, AND AFT OF THE FIGURE 39 REPAIR AS SHOWN. ALSO, DO NOT PUT NEW FASTENERS SIDE-BY-SIDE COMMON TO THE TEAR STRAPS.

REPLACEMENT REPAIR FOR SRM 53-30-3, FIGURE 39 REPAIR
DETAIL XVIII G H I W Y

Fuselage Skin, Longitudinal Splice -
Repair for Damaged Lower Skin at the Longitudinal Lap Joint Lower Row
Figure 42 (Sheet 28)

K73108

BOEING PROPRIETARY - Copyright © - Unpublished Work - See title page for details.

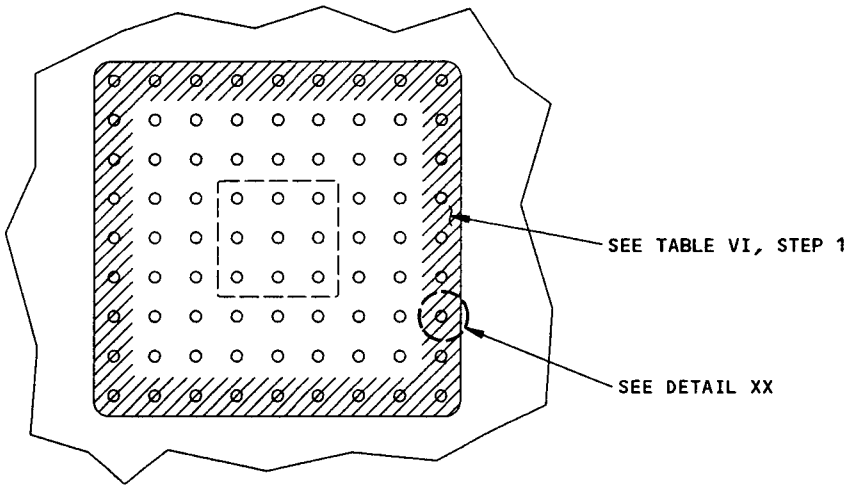

CRACK INSPECTION ZONE

EXISTING REPAIR - OUTER ROW INSPECTION REQUIREMENTS
DETAIL XIX

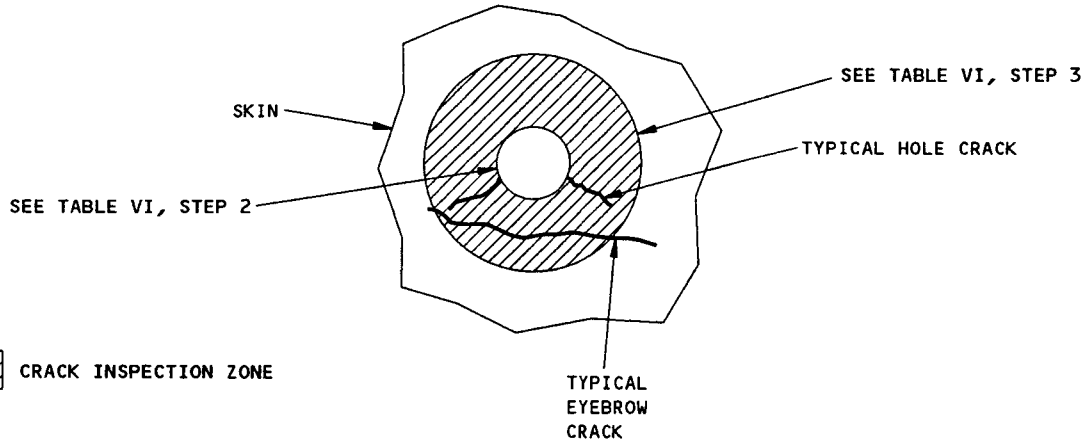

CRACK INSPECTION ZONE

STEP	TASK
1	REMOVE REPAIR DOUBLER AND INSPECT ALL OUTER ROW FASTENERS AS SPECIFIED IN STEPS 2 AND 3.
2	HOLE CRACKS - OPEN HOLE OUTER ROW: INSPECT WITH HFEC OPEN HOLE ROTATING PROBE AS GIVEN IN 737 NDT PART 6, 51-00-00, FIGURE 16. (.03 REFERENCE STANDARD)
3	EYEBROW CRACK INSPECTION ZONE - 4X DIAMETER ALL AROUND THE OPEN HOLE: WITH DOUBLER REMOVED, HFEC INSPECT FAYING SURFACE (OUTBOARD) AS GIVEN IN 737 NDT PART 6, 51-00-00, FIGURE 4 OR FIGURE 23.

TABLE VI

EXISTING REPAIR - OUTER ROW INSPECTION REQUIREMENTS
DETAIL XX

Fuselage Skin, Longitudinal Splice -
Repair for Damaged Lower Skin at the Longitudinal Lap Joint Lower Row
Figure 42 (Sheet 29)

BOEING PROPRIETARY - Copyright © - Unpublished Work - See title page for details.

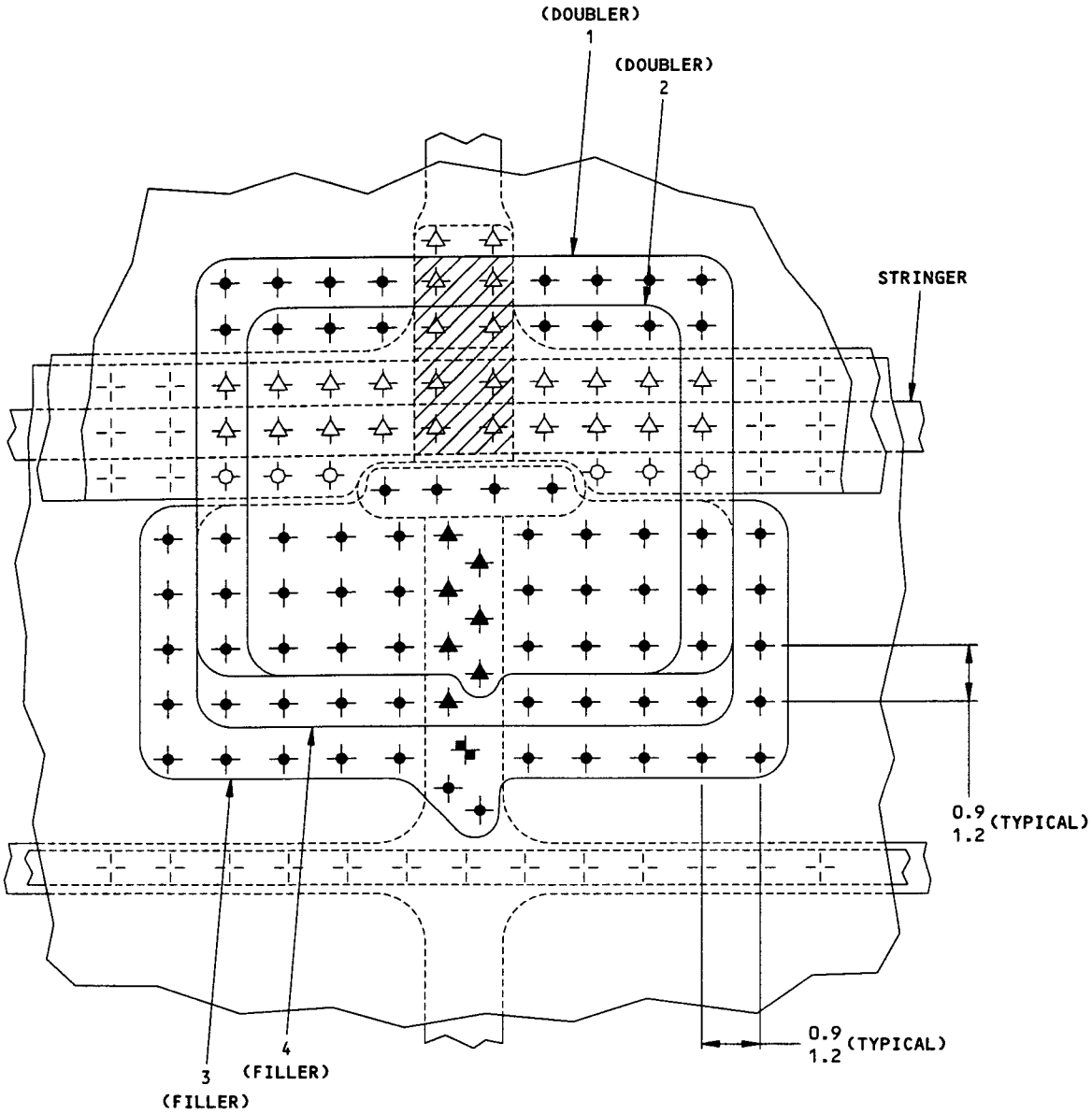

INSTALL BACR15FR6E RIVETS AT THESE EIGHT LOCATIONS. T AD

BLIND FASTENER CALLOUT AT TEAR STRAPS
(EXCEPT AT STRINGER S-10)
DETAIL XXI

Fuselage Skin, Longitudinal Splice -
Repair for Damaged Lower Skin at the Longitudinal Lap Joint Lower Row
Figure 42 (Sheet 30)

BOEING PROPRIETARY - Copyright © - Unpublished Work - See title page for details.

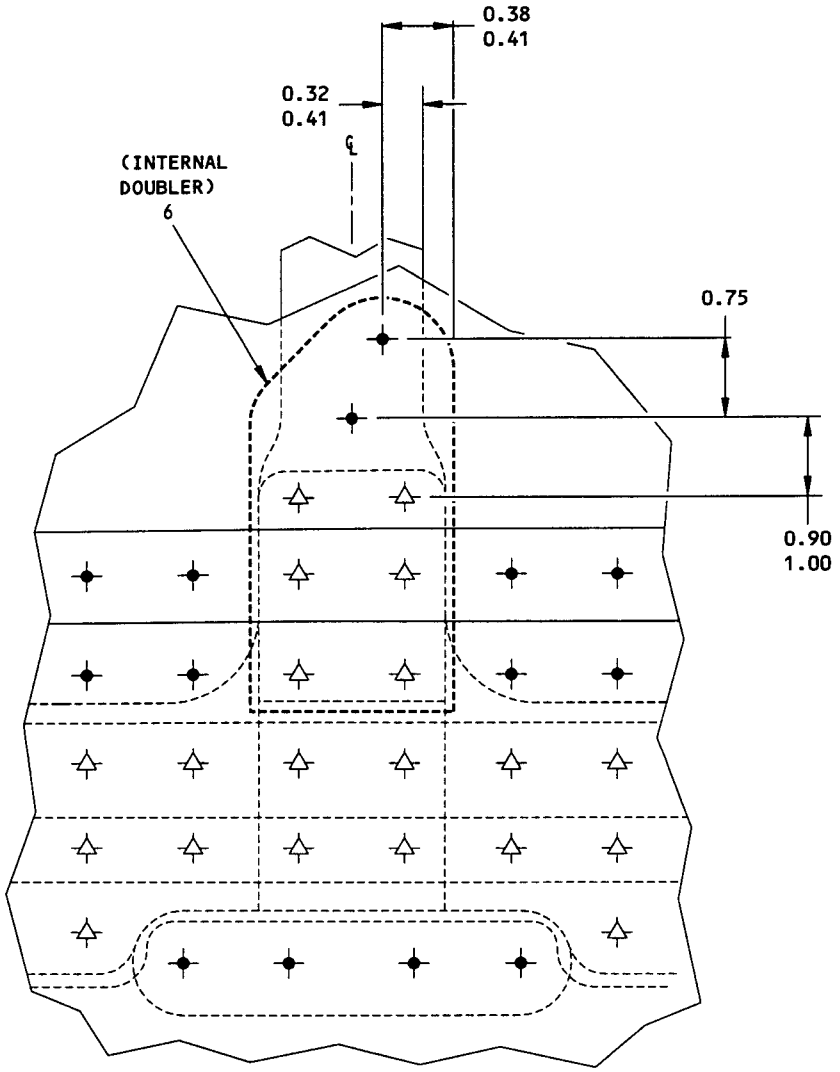

INTERNAL DOUBLER INSTALLATION AT ABOVE THE SKIN LAP SPLICE
DETAIL XXII

Fuselage Skin, Longitudinal Splice -
Repair for Damaged Lower Skin at the Longitudinal Lap Joint Lower Row
Figure 42 (Sheet 31)

BOEING PROPRIETARY - Copyright © - Unpublished Work - See title page for details.

CATEGORY B REPAIR AND SSI F-39F, G AND H INSPECTION REQUIREMENTS		
INSPECTION THRESHOLD	REPEAT INSPECTION ALTERNATIVES	
	METHOD	INTERVAL
Q	P	P

NOTE: INSPECT THE SKIN, TEAR STRAP, AND BONDED DOUBLER, AT THE FIRST ROW OF FASTENERS ALONG THE EDGE OF THE REPAIR DOUBLER AND STRUCTURAL FILLER AS SHOWN IN DETAILS XXIII OR XXIV, AS APPLICABLE.

TABLE VII

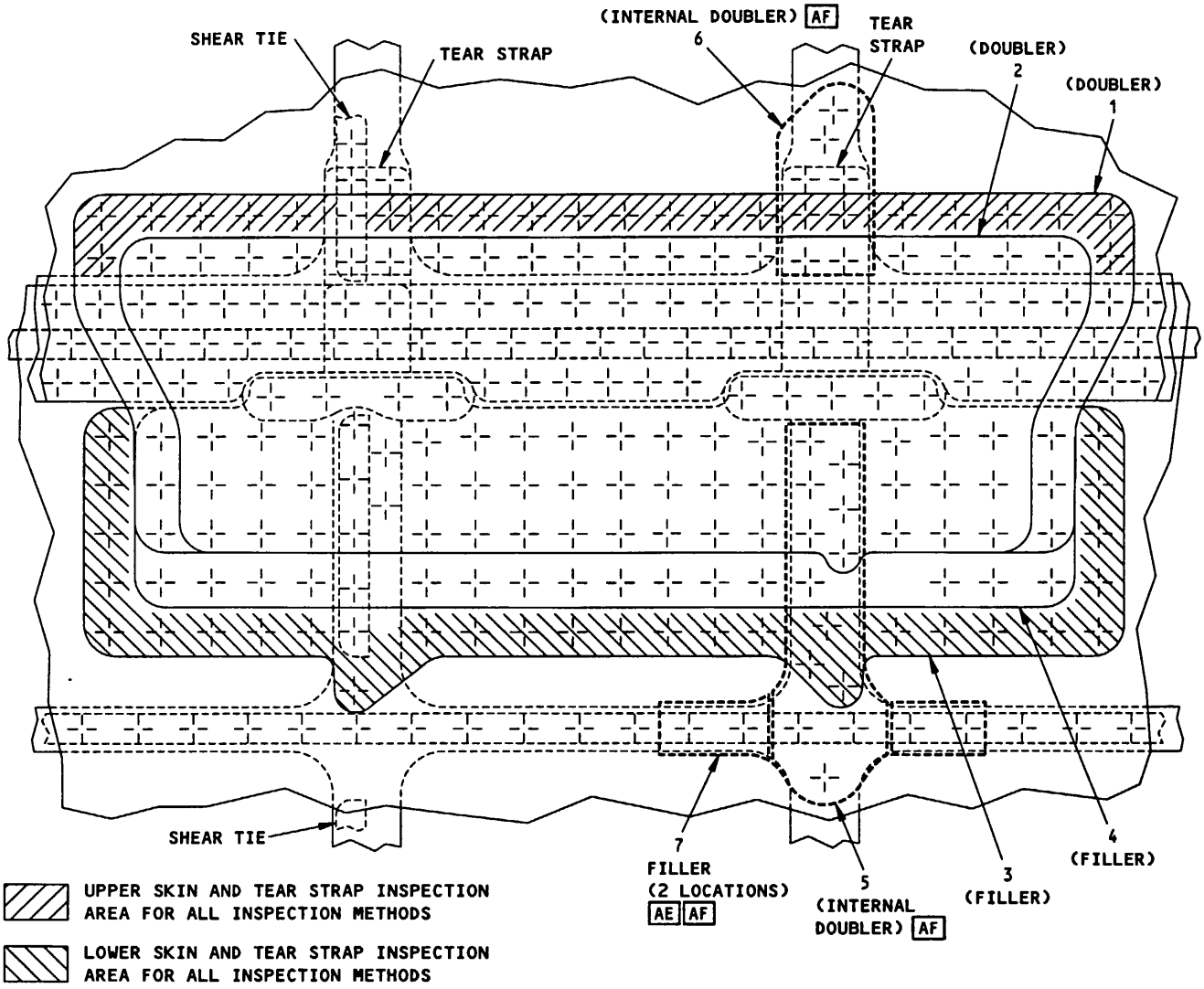

INSPECTION OF DETAIL VIII IS SHOWN,
INSPECTION OF DETAILS II, V, VI, VII, XII, XIV, AND XVIII ARE SIMILAR
DETAIL XXIII
Fuselage Skin, Longitudinal Splice -
Repair for Damaged Lower Skin at the Longitudinal Lap Joint Lower Row
Figure 42 (Sheet 32)

BOEING PROPRIETARY - Copyright © - Unpublished Work - See title page for details.

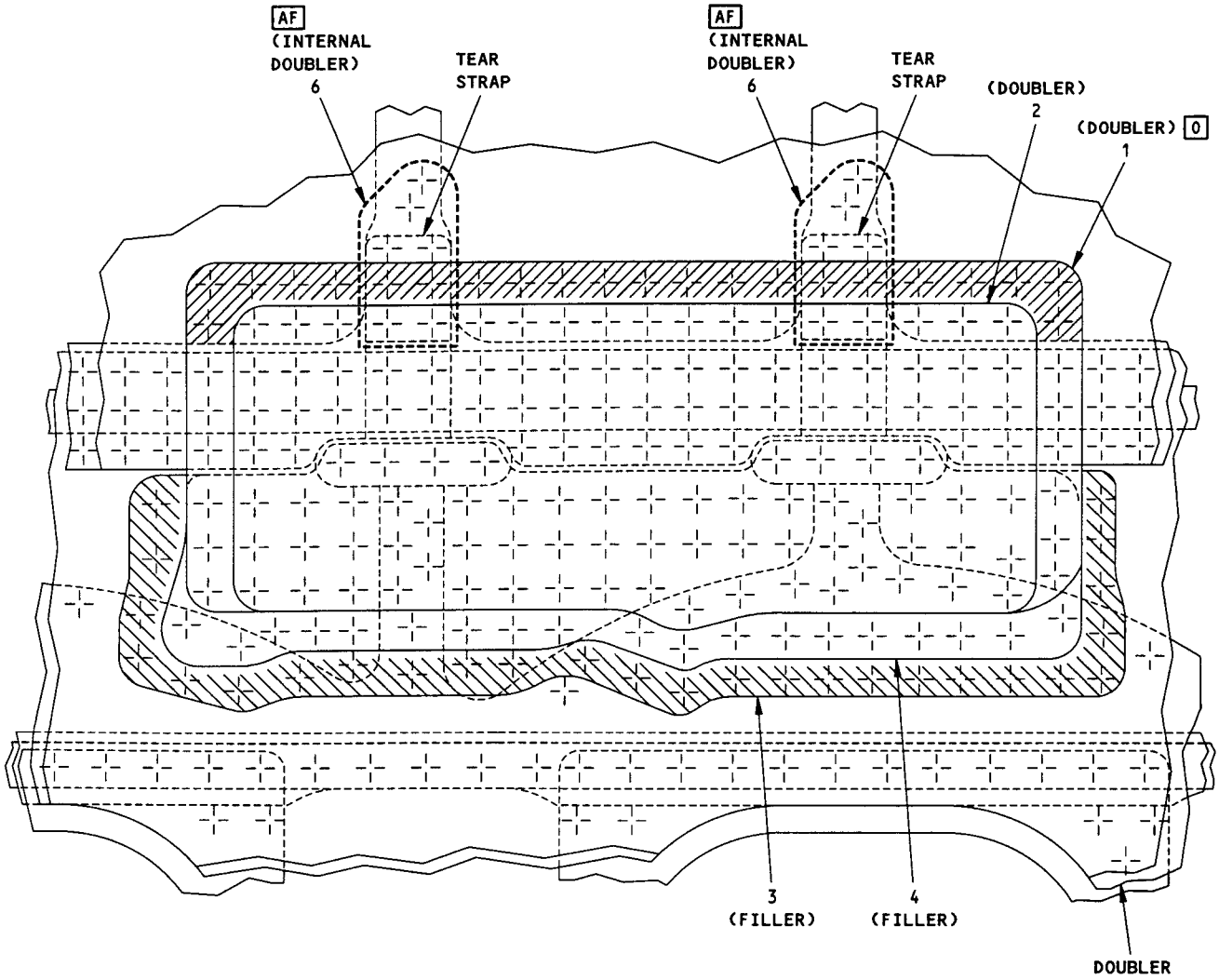

UPPER SKIN AND TEAR STRAP INSPECTION AREA FOR ALL INSPECTION METHODS

LOWER SKIN, TEAR STRAP AND DOUBLER INSPECTION AREA FOR ALL INSPECTION METHODS

INSPECTION OF DETAIL XI IS SHOWN,
INSPECTION OF DETAILS IX, X, AND XIII IS SIMILAR
DETAIL XXIV

Fuselage Skin, Longitudinal Splice -
Repair for Damaged Lower Skin at the Longitudinal Lap Joint Lower Row
Figure 42 (Sheet 33)

BOEING PROPRIETARY - Copyright © - Unpublished Work - See title page for details.

CATEGORY C REPAIR INSPECTION REQUIREMENTS			
INSPECTION THRESHOLD	REPEAT INSPECTION		TIME LIMIT
	METHOD	INTERVAL	
3,000 FLIGHT CYCLES AFTER REPAIR INSTALLATION	GENERAL VISUAL (SURVEILLANCE) INSPECTION	3,000 FLIGHT CYCLES	10,000 FLIGHT CYCLES R U

NOTE: INSPECT ALL FASTENER LOCATIONS AT THE REPAIR DOUBLERS AND REPAIR FILLERS FOR MISSING OR LOOSE FASTENERS. IF FOUND, REPLACE THE FASTENER. REFER TO DETAIL XXV FOR THE AREA WHERE THE EXTERNAL GENERAL VISUAL INSPECTION IS NECESSARY. REFER TO SERVICE BULLETIN 737-53A1177 FOR ADDITIONAL INSPECTION, REPAIR AND MODIFICATION REQUIREMENTS OF LAP JOINTS.

TABLE VIII

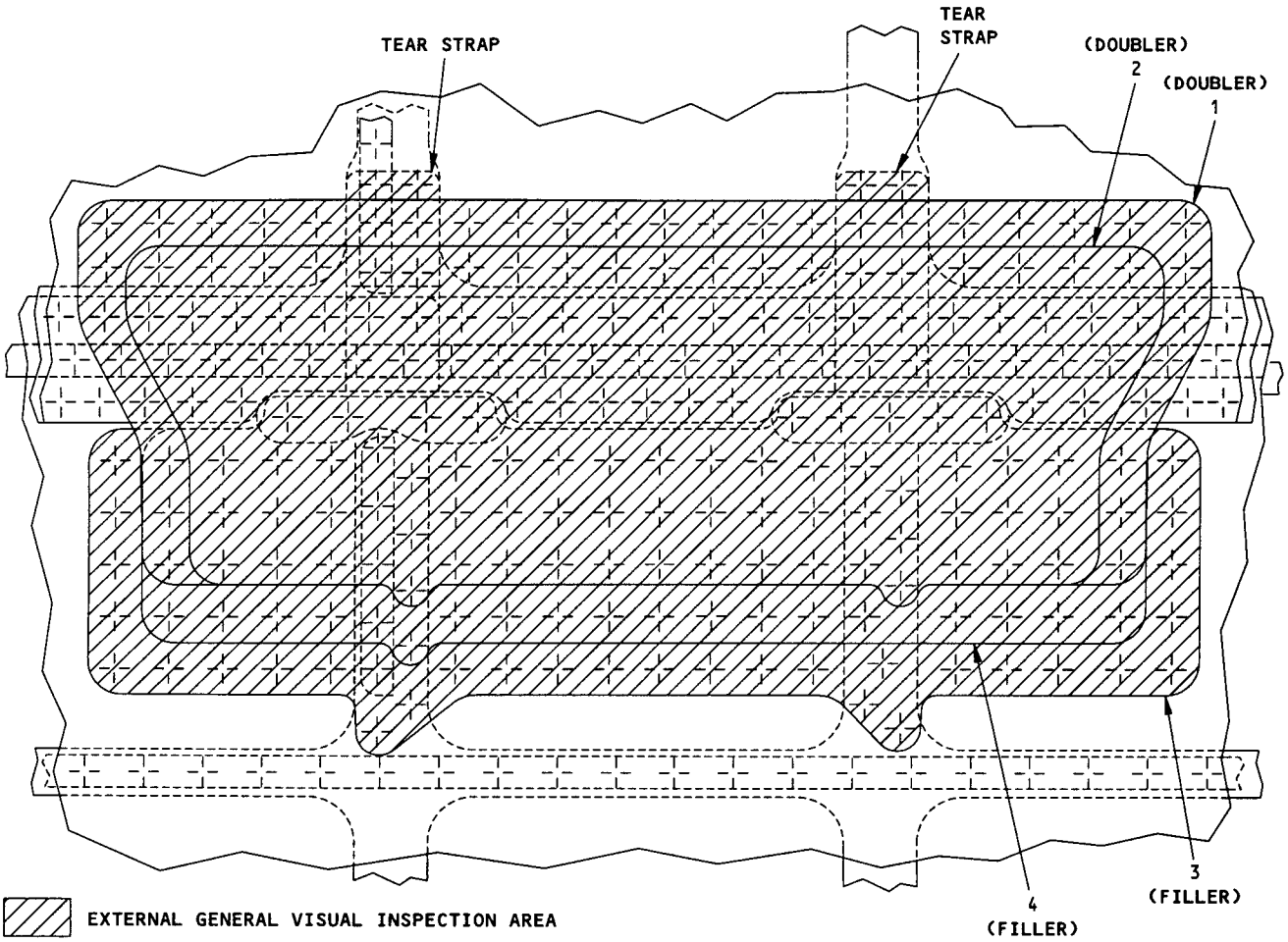

INSPECTION AREA FOR A TYPICAL BLIND FASTENER REPAIR

DETAIL XXV

Fuselage Skin, Longitudinal Splice -
Repair for Damaged Lower Skin at the Longitudinal Lap Joint Lower Row
Figure 42 (Sheet 34)

BOEING PROPRIETARY - Copyright © - Unpublished Work - See title page for details.

APPLICABILITY

THIS REPAIR IS APPLICABLE TO DAMAGE THAT:

- IS NOT MORE THAN 1.00 INCH (25 MM) IN DIAMETER
- IS IN AN AREA WHERE THE SKIN THICKNESS IS LESS THAN OR EQUAL TO 0.071 INCH.

BECAUSE OF ITS EFFECT ON AERODYNAMIC SMOOTHNESS, A PROTRUDING HEAD FASTENER REPAIR IS NOT PERMITTED IN THESE REGIONS:

- STATIC PRESSURE PORTS
- PITOT-STATIC PROBES
- ANGLE OF AIRFLOW SENSORS.

THESE REGIONS ARE SPECIFIED IN SRM 51-70, FIGURE 3.

REPAIR INSTRUCTIONS

1. Get access to the damaged area.
2. Clean out the damage to a 1.0 inch maximum diameter hole in the skin only. See Detail III. [A]

   NOTE: If there is hole damage in a bonded doubler, go to the Boeing Company for instructions.
3. Make the part 1 doubler. See Table I, Detail I, and Detail II.
4. Assemble the part 1 doubler and drill the fastener holes. Use a drill stop to limit the depth of the drill. The maximum drill depth is 0.06 inch more than the skin thickness.
5. Remove the part 1 doubler.
6. Remove the nicks, scratches, gouges, burrs, and sharp edges from the repair doubler and bare surfaces of the skin.
7. Apply a chemical conversion coating to the part 1 doubler and bare surfaces of the skin. Refer to SRM 51-10-2.
8. Apply two layers of BMS 10-79, Type II or III, primer to the part 1 doubler and bare surfaces of the skin. Refer to SOPM 20-44-04.
9. Install the part 1 doubler with BMS 5-95 sealant between the mating surfaces and add a fillet seal. Refer to SRM 53-30-4.
10. Install the fasteners as given in Table II.
11. Apply a layer of BMS 10-60, Type II finish to the repair area.

NOTES

- THIS SOLID FASTENER REPAIR IS A CATEGORY A REPAIR. THE INSPECTIONS GIVEN IN THE BASELINE ZONAL INSPECTION (BZI) ARE SUFFICIENT TO MAINTAIN THE DAMAGE TOLERANCE OF THE INITIAL STRUCTURE WITH THE REPAIR INSTALLED. REFER TO SRM 51-00-6 FOR REPAIR CATEGORIES, BZI DEFINITION AND REPAIR ASSESSMENT INFORMATION.
- THIS REPAIR WILL HAVE AN EFFECT ON THE STRUCTURAL SIGNIFICANT ITEM (SSI) NUMBER F-41 WHEN INSTALLED UNDER THE WING-TO-BODY AND LOWER LOBE FAIRINGS, BUT THE INSPECTION ALTERNATIVES ARE STILL APPLICABLE. THEREFORE, NO NEW INSPECTION ALTERNATIVES ARE NECESSARY FOR THIS REPAIR. DO THE INSPECTIONS FOR F-41, IF NECESSARY, AT THE SUBSEQUENT SUPPLEMENTAL STRUCTURAL INSPECTION DOCUMENT (SSID) INSPECTION ON THIS AIRPLANE. REFER TO SRM 51-00-4, FIGURE 3 FOR THE APPLICABLE SSI INFORMATION.
- D = THE FASTENER DIAMETER
- ALL DIMENSIONS ARE IN INCHES, UNLESS GIVEN DIFFERENTLY.
- WHEN YOU DO THIS REPAIR, REFER TO THE FOLLOWING:
  - SOPM 20-44-04 FOR APPLICATION OF CHEMICAL AND SOLVENT RESISTANT FINISH
  - SRM 51-00-6 FOR REPAIR CATEGORIES AND DEFINITIONS
  - SRM 51-10-1 FOR DAMAGE CLASSIFICATION
  - SRM 51-10-2 FOR PROTECTIVE TREATMENT OF METAL
  - SRM 51-20-4 FOR SEALING REPAIR
  - SRM 51-30 FOR FASTENER CODE, REMOVAL AND INSTALLATION, HOLE SIZES, EDGE MARGINS AND SUBSTITUTION
  - SRM 51-70 FOR AERODYNAMIC SMOOTHNESS
  - SRM 53-30-4 FOR SEALING OF FUSELAGE SKIN REPAIRS.

[A] THE DISTANCE FROM THE CENTER OF THE HOLE TO AN EDGE OR CUTOUT MUST NOT BE LESS THAN 4 TIMES THE DIAMETER OF THE HOLE.

[B] THERE MUST BE A MINIMUM DISTANCE OF 4D FROM A REFERENCE FASTENER.

FASTENER SYMBOLS

REFERENCE FASTENER LOCATION. USE REFERENCE FASTENERS TO FIND THE LOCATION OF INTERNAL BONDED DOUBLERS.

REPAIR FASTENER LOCATION. SEE TABLE II FOR FASTENERS.

Fuselage Skin - Small External Repair with Solid Fasteners
Figure 43 (Sheet 1)

BOEING PROPRIETARY - Copyright © - Unpublished Work - See title page for details.

REPAIR MATERIAL			
PART		QTY	MATERIAL
1	DOUBLER	1	2024-T3 CLAD SEE TABLE II FOR THE GAGE

TABLE I

FASTENER	SKIN GAGE (INCHES)	REPAIR PART 1 GAGE (INCHES)	A (INCHES)	B (INCHES)	C (INCHES)	INNER RIVET CIRCLE		OUTER RIVET CIRCLE	
						QTY	DIA (INCHES)	QTY	DIA (INCHES)
BACR15BB5D	0.032 0.036 0.040	0.036 0.040 0.045	4.10 4.10 4.10	1.70 1.70 1.70	3.10 3.10 3.10	7 7 7	5/32 5/32 5/32	14 14 14	5/32 5/32 5/32
BACR15BB5D OR BACR15CE5D	0.045 0.050	0.050 0.056	4.10 4.40	1.70 1.80	3.10 3.50	7 8	5/32 5/32	14 15	5/32 5/32
BACR15BB6D	0.056	0.063	4.60	1.80	3.50	6	3/16	13	3/16
BACR15CE6D OR BACR15BB6D	0.063 0.071	0.071 0.080	4.60 5.40	1.80 2.00	3.50 4.25	6 7	3/16 3/16	13 14	3/16 3/16

TABLE II

Fuselage Skin - Small External Repair with Solid Fasteners
Figure 43 (Sheet 2)

BOEING PROPRIETARY - Copyright © - Unpublished Work - See title page for details.

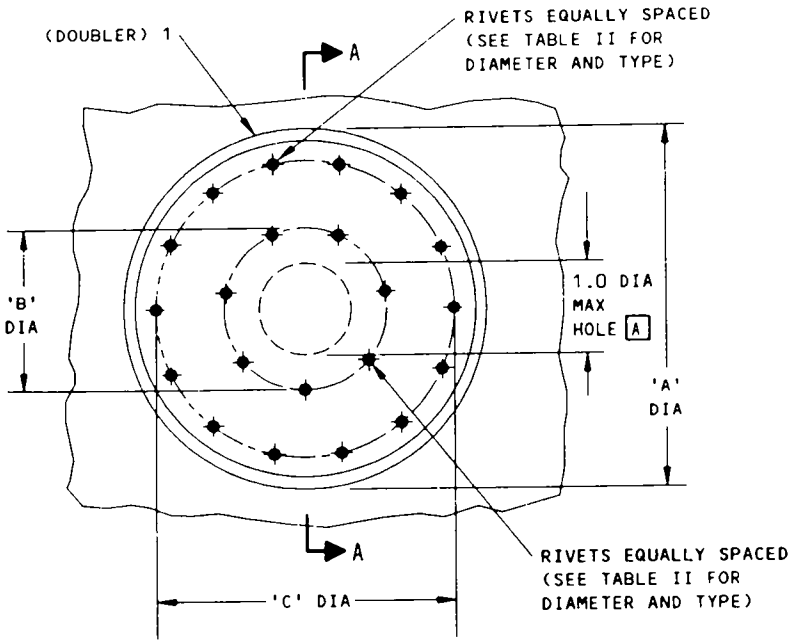

INSTALLATION OF THE REPAIR
DETAIL I

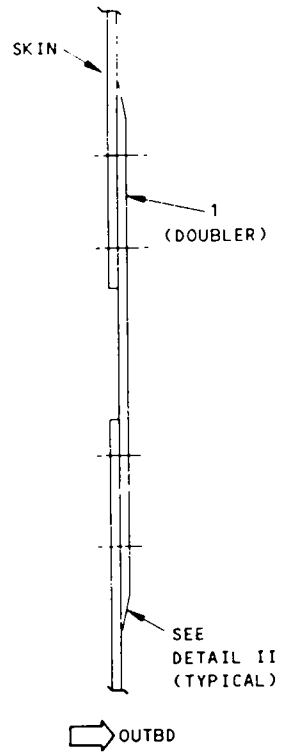

SECTION A-A

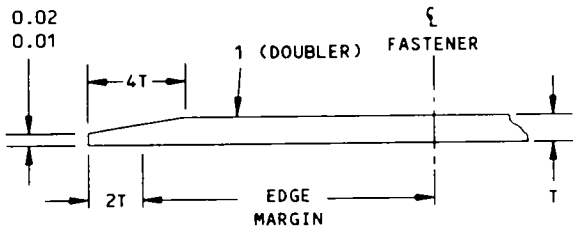

DETAIL II

Fuselage Skin - Small External Repair with Solid Fasteners
Figure 43 (Sheet 3)

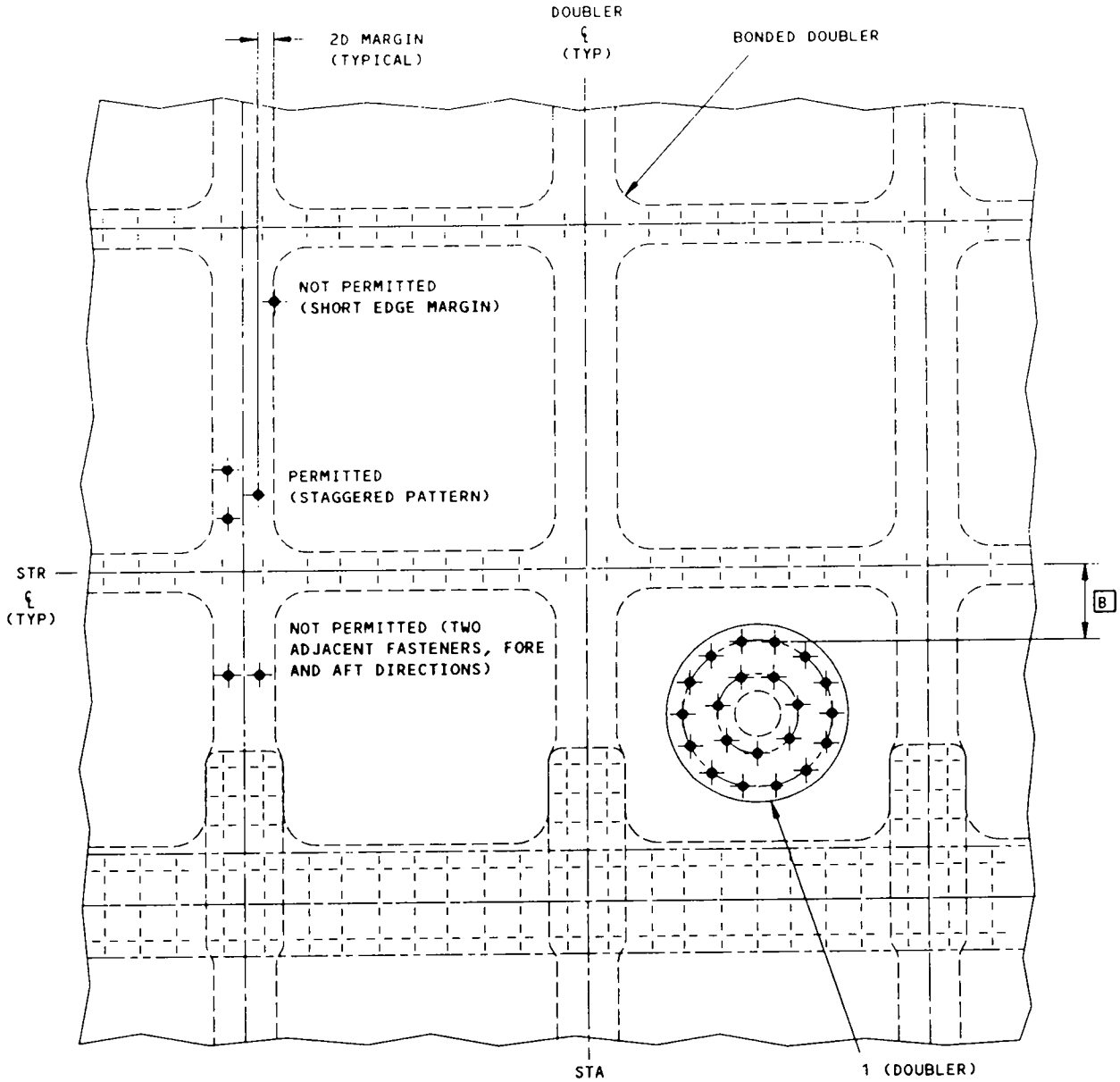

REPAIR FASTENER LOCATIONS AT BONDED DOUBLERS AND A TYPICAL REPAIR DOUBLER
DETAIL III

Fuselage Skin - Small External Repair with Solid Fasteners
Figure 43 (Sheet 4)

APPLICABILITY

THIS REPAIR IS APPLICABLE TO 737-200 AIRPLANES, CUM LINE NUMBERS 1-291, AS IDENTIFIED IN SERVICE BULLETIN 737-53A1177. USE THIS REPAIR FOR CRACKS IN THE LOWER ROW OF FASTENERS IN THE SPECIFIED AREAS OF LONGITUDINAL LAP SPLICES ON STRINGERS 10 AND 14. DO NOT INSTALL THIS REPAIR WHERE THE INITIAL FASTENERS WERE LOCKBOLTS OR HEX-DRIVE BOLTS IN THE LAP JOINT.

REPAIR INSTRUCTIONS

PROCEDURE I: MAKE SURE THE SIZE OF THE CUTOUT IS AS SHOWN IN DETAIL I AND II

1. Find the location of the area that will be cutout. Do the step given in Table I.

CODE	DESCRIPTION	ACTION
⊕	One hole at each end of the cutout area. [A]	Do a HFEC inspection to the holes. Refer to NDT Part 6, 51-00-00, Fig. 16. A. If there is no crack, make the cutout. B. If there is a crack, oversize the hole by 1/16 inch diameter. Do the HFEC inspection again. 1. If there is no crack, make the cutout. 2. If a crack remains, contact The Boeing Company.

TABLE I

PROCEDURE II: EXAMINE THE REPAIR AREA

CAUTION: If there is an existing repair common to the repair area defined here, except for the full length repair given in Fig. 2 of the Service Bulletin 737-53-1135, contact the Boeing Company for repair instructions.

1. Remove the remaining fasteners (△ and ⊕) that are necessary for the repair.

   CAUTION: DO NOT SEPARATE THE LAP JOINTS TO INSPECT FOR DAMAGE. IF THE UPPER AND LOWER SKINS OF THE LAP JOINTS ARE SEPARATED DURING ACCOMPLISHMENT OF THIS SERVICE BULLETIN, REPAIR OF THAT SEGMENT OF THE LAP JOINT IS NECESSARY. DO NOT RE-FASTEN THE LAP JOINT BACK TOGETHER AS THIS MAY LEAVE DAMAGE REMAINING IN THE JOINT.

2. Inspect the areas of the lap joint that are not cut by the repair but will be included by the repair doublers. Refer to Boeing Service Bulletin 737-53A1224, Revision 1. Do Accomplishment Instructions and Figure 1 through 7. Inspect for cracks, pillowing, corrosion, delamination, or loose or missing fasteners. If differences are found, contact the Boeing Company for repair instructions.

3. Do a high frequency eddy current (HFEC) procedure to these holes. If there is a crack, tell the Boeing Company.

   NOTE: It is not necessary to do this inspection:

   - For the holes given in Procedure I
   - For the holes where the fasteners (△) were changed at the Lap joint or at the window belt (as given in Service Bulletins 737-53-1039 and 737-53-1078). When you install the repair parts (in the area where the fasteners were changed to button-head fasteners as given in the Service Bulletins) install again the initial type of protruding-head fasteners with the same diameter.
   - For the holes to which the Service Bulletins in this note are applicable, but have not been done. Do the inspections and the Service Bulletins at the same time that you install the repair parts. Do the Service Bulletin tasks at the repair fastener locations shown in this figure, as applicable.

Fuselage Skin, Longitudinal Splice -
Repair for Damaged Lower Skin at S-10 and S-14 Between BS 727 and BS 727B
Figure 44 (Sheet 1)

BOEING PROPRIETARY - Copyright © - Unpublished Work - See title page for details.

PROCEDURE II (CONTINUED)

Refer to NDT Part 6, 53-30-00, Figure 3.

If there is no crack and:

- The ⊹ hole has a diameter of 5/32 inch, you will oversize the hole to 0.221/0.233 inch in diameter. In Procedure IV you will install a BACR15ET7AD rivet. [D] [E]
- The ⊹ hole has a diameter of 3/16 inch, you will oversize the hole to 0.254/0.265 inch in diameter. In Procedure IV you will install a BACR15BB8AD rivet. [D] [E]
- The ⊹ hole has a diameter of 5/32 inch, you will oversize the hole to 0.191/0.202 inch in diameter. In Procedure IV you will install a BACR15BB6D rivet. If necessary, you will oversize the hole to 0.221/0.233 inch in diameter and, in Procedure IV you will install a BACR15ET7AD rivet. [E] [H]
- The ⊹ hole has a diameter of 3/16 inch, you will install a BACR15BB6D rivet in Procedure IV. If necessary, you will oversize the hole to 0.221/0.233 inch in diameter and, in Procedure IV you will install a BACR15ET7AD rivet. [E] [H]

NOTE: If cracks, disbond, or corrosion in the tear straps or lap joint is found as a result of the service bulletin inspections, contact the Boeing Company for repair instructions. Corrosion damage in the fuselage skin should not be blended out. Repair of corrosion damage requires a cutout repair.

PROCEDURE III: MAKE THE CUTOUT

CAUTION: DO NOT MAKE A NICK OR GOUGE IN THE STRINGER WHEN YOU MAKE THE CUTOUT.

1. Carefully make the cutout as required. See Detail V.
2. Keep all cut skin sections. Mark the stringer number, forward and aft station locations, and the aircraft identification, including airplane cycles, on each section. Forward the samples to the following address:

   Boeing Commercial Airplane Company
   Spares Distribution Center
   Warranty and Overhaul Area
   2201 South 142nd, Door W10
   M/C 34-02
   SeaTac, WA 98168
   USA

   Attention: Airline Support Manager
   Forward to 737 Post Production
   Fuselage Stress for
   Engineering evaluation

PROCEDURE IV: MAKE AND INSTALL THE REPAIR PARTS

1. Make the repair parts as given in Table III and shown in Details I and II. For repair parts that are 0.036 inch and thicker, pre-form or roll the part to match the existing fuselage contour prior to installation.
2. Assemble to repair parts. Keep a 0.050 to 0.070 inch clearance between repair parts 3 and 4 and the edges of the initial skins. See Detail VI.
3. Drill the fastener holes. See Details I and II.
4. Disassemble repair parts.
5. Remove the nicks, scratches, gouges, burrs and sharp edges from the repair parts and the initial skins.
6. Apply a chemical conversion coating to the repair parts and to the cut edges of the initial skins. Refer to SRM 51-10-2.
7. Apply one layer of BMS 10-79, Type III primer to the repair parts and to the cut edges of the initial skins. Refer to SOPM 20-44-04.
8. Install countersunk repair washers as necessary. Refer to SRM 51-30-8.
9. Install the repair parts with BMS 5-95 sealant between the mating surface. Refer to SRM 53-30-4.
10. Install the fasteners. Install non-aluminum fasteners wet with BMS 5-95 sealant in transition fit holes.
11. Apply a fillet seal with BMS 5-95 sealant along the edges of the repair parts. Refer to SRM 53-30-4.
12. Apply a layer of BMS 10-11, Type II enamel to the repair area. Refer to SOPM 20-41-02.
13. Apply a layer of BMS 3-23 corrosion inhibiting compound on the internal surfaces of the repair area. Refer to SRM 51-10-2.

Fuselage Skin, Longitudinal Splice -
Repair for Damaged Lower Skin at S-10 and S-14 Between BS 727 and BS 727B
Figure 44 (Sheet 2)

BOEING PROPRIETARY - Copyright © - Unpublished Work - See title page for details.

NOTES

- REPAIRS MADE AS GIVEN IN THIS FIGURE ARE AN ALTERNATE METHOD OF COMPLIANCE UNDER THE REPAIR, TO:
  - SB 737-53A1224 R1 AND PARAGRAPH (b) OF FAA AD 2003-23-03, AMENDMENT 39-13367 IN THE AREAS COVERED BY THIS REPAIR.
- S = THE DISTANCE BETWEEN FASTENERS
- D = THE DIAMETER OF THE FASTENER
- ALL DIMENSIONS ARE IN INCHES, UNLESS SHOWN DIFFERENTLY
- MACHINED SURFACES MUST HAVE A FINISH OF 63 MICROINCHES Ra OR BETTER, UNLESS A DIFFERENT FINISH IS SPECIFIED
- WHEN YOU USE THIS REPAIR REFER TO:
  - AMM 51-21 FOR INTERIOR AND EXTERIOR FINISHES
  - NDT PART 6, 51-00-00, FIG. 16 FOR EDDY CURRENT INSPECTION OF FASTENER HOLES IN ALUMINUM PARTS
  - NDT PART 6, 53-30-00, FIG. 3 FOR EDDY CURRENT INSPECTION OF COUNTERSUNK HOLES IN ALUMINUM PARTS
  - SOPM 20-41-02 FOR APPLICATION OF CHEMICAL AND SOLVENT RESISTANT FINISHES
  - SOPM 20-44-04 FOR APPLICATION OF URETHANE COMPATIBLE PRIMER
  - SRM 51-00-6 FOR REPAIR CATEGORIES, DEFINITIONS AND REPAIR ASSESSMENT PROGRAM DATA
  - SRM 51-10-1 FOR DAMAGE CLASSIFICATION AND ZERO-TIMING PROCEDURE
  - SRM 51-10-2 FOR PROTECTIVE TREATMENT OF METAL
  - SRM 51-20-4 FOR REPAIR SEALING
  - SRM 51-30 FOR FASTENER CODE, REMOVAL AND INSTALLATION, HOLE SIZES AND EDGE MARGINS
  - SRM 51-70 FOR AERODYNAMIC SMOOTHNESS.

[A] THIS STEP MAKES SURE THAT A CRACK WILL NOT EXTEND TO THE EDGE OF THE CUTOUT.

[B] FOR DETAIL I (S-10 REPAIR), THE FILLER THICKNESS IS 0.032 INCH. FOR DETAIL II (S-14 REPAIR), THE FILLER THICKNESS IS 0.032 INCH OR 0.040 INCH TO MAKE THE THICKNESS OF PARTS 3 PLUS 4 THE SAME AS THE THICKNESS OF THE UPPER SKIN PLUS BONDED DOUBLER (± 0.01 INCH).

[C] TAPER FILLER FROM 0.040 INCH AT BS 727A + 11.50 DOWN TO 0.010 INCH TO MATCH THE INITIAL 90-9195-1664 TAPERED FILLER (IN SHADED AREA).

[D] IF THIS FASTENER WAS CHANGED (AS GIVEN IN SERVICE BULLETINS 737-53A1039 OR 737-53-1078) INSTALL AGAIN THE INITIAL TYPE OF PROTRUDING HEAD FASTENER WITH THE SAME DIAMETER.

[E] INSTALL RIVETS WITH DRIVEN HEADS THAT ARE A MINIMUM 1.4D IN DIAMETER. IF THERE ARE STEEL FASTENERS IN THE REPAIR AREA, REPLACE THEM WITH FASTENERS OF THE INITIAL TYPE AND MATERIAL (EXCEPT USE PROTRUDING HEAD FASTENERS). USE THE DIAMETER THAT IS GIVEN IN THE REPAIR FIGURE.

[F] REFER TO DETAILS III AND IV FOR TAB GEOMETRY AND LOCATIONS OF REPAIR FASTENERS.

[G] ADJUST THE CONFIGURATION OF THE REPAIR PARTS EDGES AS NECESSARY TO KEEP A MINIMUM 1.7D EDGE MARGIN ON INITIAL FASTENERS AND MINIMUM 2.0D EDGE MARGIN ON REPAIR FASTENERS. MAKE THE DISTANCE BETWEEN FASTENERS 0.90 TO 1.2 INCH.

[H] INSTALL A REPAIR WASHER AS GIVEN IN SRM 51-30-8.

[I] KEEP A MINIMUM EDGE MARGIN OF 1.5D ON THE SHEAR TIE. IF YOU CANNOT KEEP THE MINIMUM EDGE MARGIN, CONTACT THE BOEING COMPANY FOR INSTRUCTIONS.

[J] REFER TO OPERATOR'S REPAIR ASSESSMENT GUIDELINES FOR THE REPEAT INSPECTION INTERVAL AND METHOD ALTERNATIVES.

[K] THE SOLID RIVET REPAIR IS CATEGORY A AND NO SUPPLEMENTAL INSPECTIONS ARE NECESSARY IF CONDITIONS 1 AND 2 ARE MET:

1. THE LENGTH AND WIDTH OF THE REPAIR DOUBLER IS LESS THAN OR EQUAL TO 12 INCHES.
2. NO OTHER REPAIR DOUBLER IS INSTALLED WITHIN 3 INCHES IN THE LONGITUDINAL DIRECTION.

IF THIS REPAIR IS NOT CATEGORY A, THEN IT IS A CATEGORY B REPAIR. THE CATEGORY B REPAIR HAS FAA APPROVAL IF YOU DO THE SUPPLEMENTAL INSPECTIONS GIVEN IN TABLE IV. INCORPORATION OF THESE REQUIREMENTS INTO THE AIRPLANE'S MAINTENANCE PROGRAM SATISFIES THE DAMAGE TOLERANCE ASSESSMENT OF THE REPAIR SPECIFIED BY THE REPAIR ASSESSMENT PROGRAM. THIS ASSESSMENT CAN BE DONE AFTER YOU RELEASE THE AIRPLANE TO SERVICE. REFER TO SRM 51-00-6 FOR GENERAL DATA ABOUT THE REPAIR ASSESSMENT PROGRAM. SEE DETAIL VII FOR THE INSPECTION AREA.

Fuselage Skin, Longitudinal Splice -
Repair for Damaged Lower Skin at S-10 and S-14 Between BS 727 and BS 727B
Figure 44 (Sheet 3)

BOEING PROPRIETARY - Copyright © - Unpublished Work - See title page for details.

NOTES (CONTINUED)

[L] THE SOLID RIVET REPAIR IS A CATEGORY B REPAIR. THE CATEGORY B REPAIR HAS FAA APPROVAL IF YOU DO THE SUPPLEMENTAL INSPECTIONS GIVEN IN TABLE IV. INCORPORATION OF THESE REQUIREMENTS INTO THE AIRPLANE'S MAINTENANCE PROGRAM SATISFIES THE DAMAGE TOLERANCE ASSESSMENT OF THE REPAIR SPECIFIED BY THE REPAIR ASSESSMENT PROGRAM. THIS ASSESSMENT CAN BE DONE AFTER YOU RELEASE THE AIRPLANE TO SERVICE. REFER TO SRM 51-00-6 FOR GENERAL DATA ABOUT THE REPAIR ASSESSMENT PROGRAM. SEE DETAIL VIII FOR THE INSPECTION AREA.

[M] THIS REPAIR (DETAIL I) WHEN INSTALLED AT STRINGER S-10L/R WILL HAVE AN EFFECT ON THE STRUCTURALLY SIGNIFICANT ITEM (SSI):

- NUMBER F-39C AND H, BUT THE SUPPLEMENTAL INSPECTIONS GIVEN IN TABLE IV WILL MEET THE SSID INSPECTION REQUIREMENTS FOR F-39H IN THE REPAIR AREA. HOWEVER, THE INTERNAL INSPECTION ALTERNAIVE OF F-39C IS STILL APPLICABLE.
- NUMBER F-48A, BUT THE SUPPLEMENTAL INSPECTIONS GIVEN IN THE TABLE IV FOR THE NEW CRITICAL DETAIL WILL MEET THE SSID INSPECTION REQUIREMENTS OF F-48 IN THE REPAIR AREA.

DO THE INTERNAL INSPECTIONS FOR F-39C, IF NECESSARY, AT THE SUBSEQUENT SUPPLEMENTAL STRUCTURAL INSPECTION DOCUMENT (SSID) INSPECTION ON THIS AIRPLANE. REFER TO SRM 51-00-4, FIG. 3 FOR THE APPLICABLE SSI DATA.

[N] THIS REPAIR (DETAIL II) WHEN INSTALLED AT STRINGER S-14L/R WILL HAVE AN EFFECT ON THE STRUCTURALLY SIGNIFICANT ITEM (SSI):

- NUMBER F-48A, BUT THE SUPPLEMENTAL INSPECTIONS GIVEN IN TABLE IV FOR THE NEW CRITICAL DETAIL WILL MEET THE SSID INSPECTON REQUIREMENTS OF F-48 IN THE REPAIR AREA. REFER TO SRM 51-00-4, FIGURE 3, FOR THE APPLICABLE SSI DATA.

[O] IF THE AIRPLANE HAS LESS THAN 66,000 FLIGHT CYCLES, THE INSPECTION THRESHOLD IS THE EARLIER OF:

- THE INITIAL SCHEDULED INSPECTION AS GIVEN IN THE OPERATOR'S REPAIR ASSESSMENT PROGRAM (RAP)
- 66,000 FLIGHT CYCLES.

IF THE AIRPLANE HAS MORE THAN 66,000 FLIGHT CYCLES AND THE INITIAL SCHEDULED SUPPLEMENTAL STRUCTURAL INSPECTION DOCUMENT (SSID) INSPECTION HAS BEEN PERFORMED, THE INSPECTION THRESHOLD IS:

- THE NEXT SCHEDULED SSID INSPECTION FOR THE STRUCTURALLY SIGNIFICANT ITEM F-39H IN THE REPAIRED AREA.

[P] FOR AIRPLANE WITH BASIC NUMBERS:

P2507-P2716, P2801-P2807, P3501-P3513 AND P3601-P3604 IS SHOWN. OTHER AIRPLANES ARE SIMILAR.

[Q] FABRICATE AND INSTALL THE PART 5 AND 6 (FILLERS) AT STRINGER S-14L/R TO CORRESPOND WITH THE CONFIGURATION OF THE PRODUCTION LOWER SKIN AND BONDED DOUBLER. [P]

FASTENER SYMBOLS

- REFERENCE FASTENER LOCATION
- INITIAL FASTENER LOCATION. SEE TABLE II. SEE PROCEDURE II. [D] [E] [H]
- INITIAL FASTENER LOCATION. INSTALL A BACR15BB6D RIVET. IF NECESSARY, OVERSIZE THE HOLE TO 0.221-0.233 IN DIAMETER AND INSTALL A BACR15ET7AD RIVET. [E] [H] [I]
- INITIAL FASTENER LOCATION. SEE PROCEDURE I. INSTALL BACR15BB6AD. [E]
- REPAIR FASTENER LOCATION. INSTALL A BACR15BB6AD RIVET. [E]
- REPAIR FASTENER LOCATION. INSTALL A BACR15BB6D RIVET. [E]
- REPAIR FASTENER LOCATION. INSTALL A BACR15BB5D RIVET CENTERED ON BONDED DOUBLER. [E]

Fuselage Skin, Longitudinal Splice -
Repair for Damaged Lower Skin at S-10 and S-14 Between BS 727 and BS 727B
Figure 44 (Sheet 4)

BOEING PROPRIETARY - Copyright © - Unpublished Work - See title page for details.

IF THE INITIAL FASTENER IS:	OVERSIZE TO (INCH)	INSTALL
BACR15CE5D	0.221 - 0.232	BACR15ET7AD*
BACR15CE6D	0.254 - 0.265	BACR15BB8AD*
BACB30GY6A	0.247 - 0.250	BACB30FM8A*
OTHER		BUTTON HEAD EQUIVALENT AS GIVEN IN SRM 51 OR CONTACT THE BOEING COMPANY FOR MORE INFORMATION

TABLE II

REPAIR MATERIAL			
PART		QTY	MATERIAL
1	DOUBLER	1	0.032 INCH CLAD 2024-T3
2	DOUBLER	1	0.050 INCH CLAD 2024-T3
3	FILLER	1	0.032 INCH OR 0.040 INCH CLAD 2024-T3 B
4	TAPPERED FILLER	1	0.040 INCH CLAD 2024-T3 C
5	FILLER	1	CLAD 2024-T3 SAME THICKNESS AS LOWER SKIN AND DOUBLER Q
6	FILLER	1	CLAD 2024-T3 SAME THICKNESS AS LOWER SKIN Q

TABLE III

Fuselage Skin, Longitudinal Splice -
Repair for Damaged Lower Skin at S-10 and S-14 Between BS 727 and BS 727B
Figure 44 (Sheet 5)

BOEING PROPRIETARY - Copyright © - Unpublished Work - See title page for details.

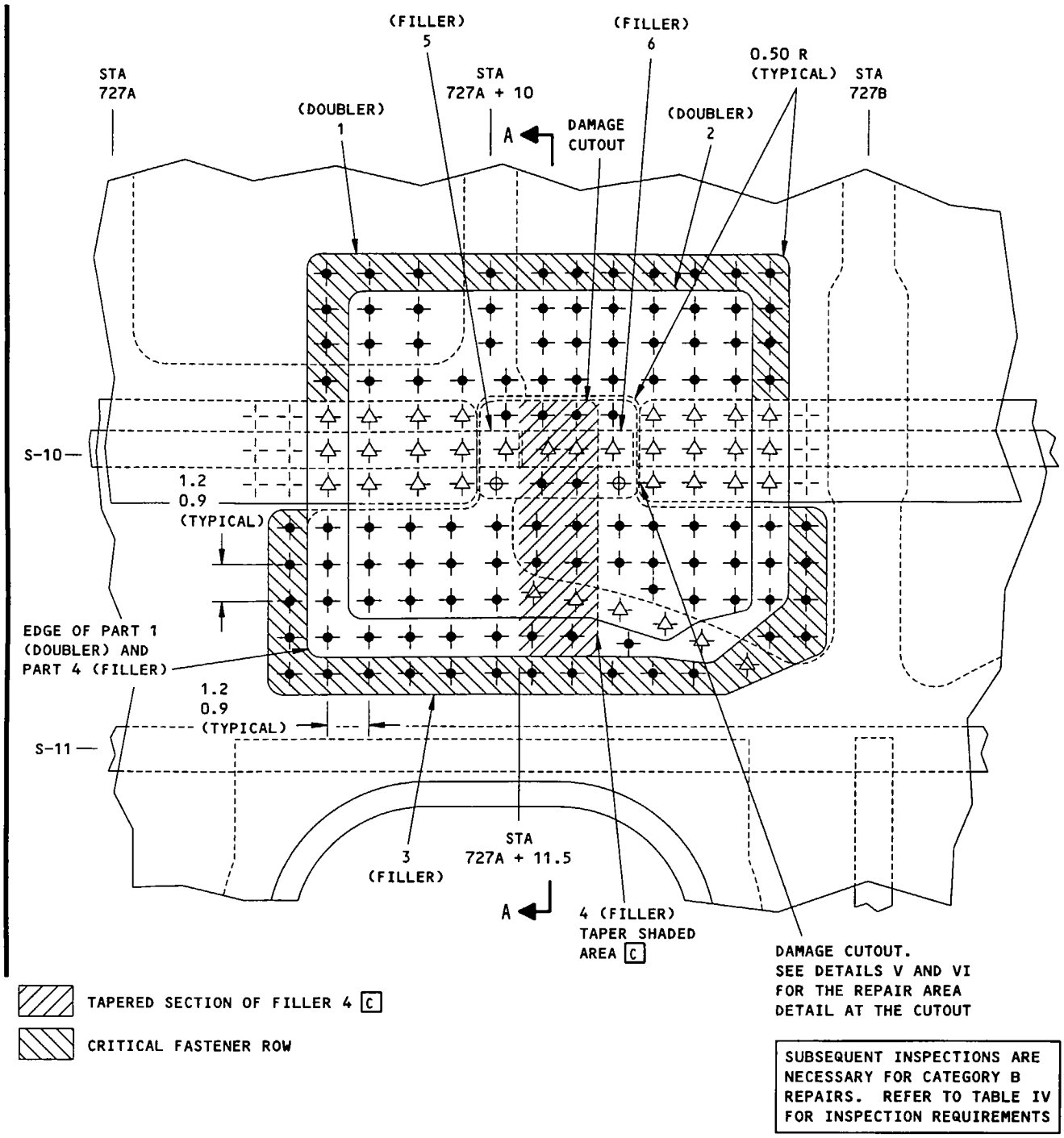

SUBSEQUENT INSPECTIONS ARE NECESSARY FOR CATEGORY B REPAIRS. REFER TO TABLE IV FOR INSPECTION REQUIREMENTS

REPAIR FOR DAMAGE AT STR S-10
DETAIL I K M

Fuselage Skin, Longitudinal Splice -
Repair for Damaged Lower Skin at S-10 and S-14 Between BS 727 and BS 727B
Figure 44 (Sheet 6)

BOEING PROPRIETARY - Copyright © - Unpublished Work - See title page for details.

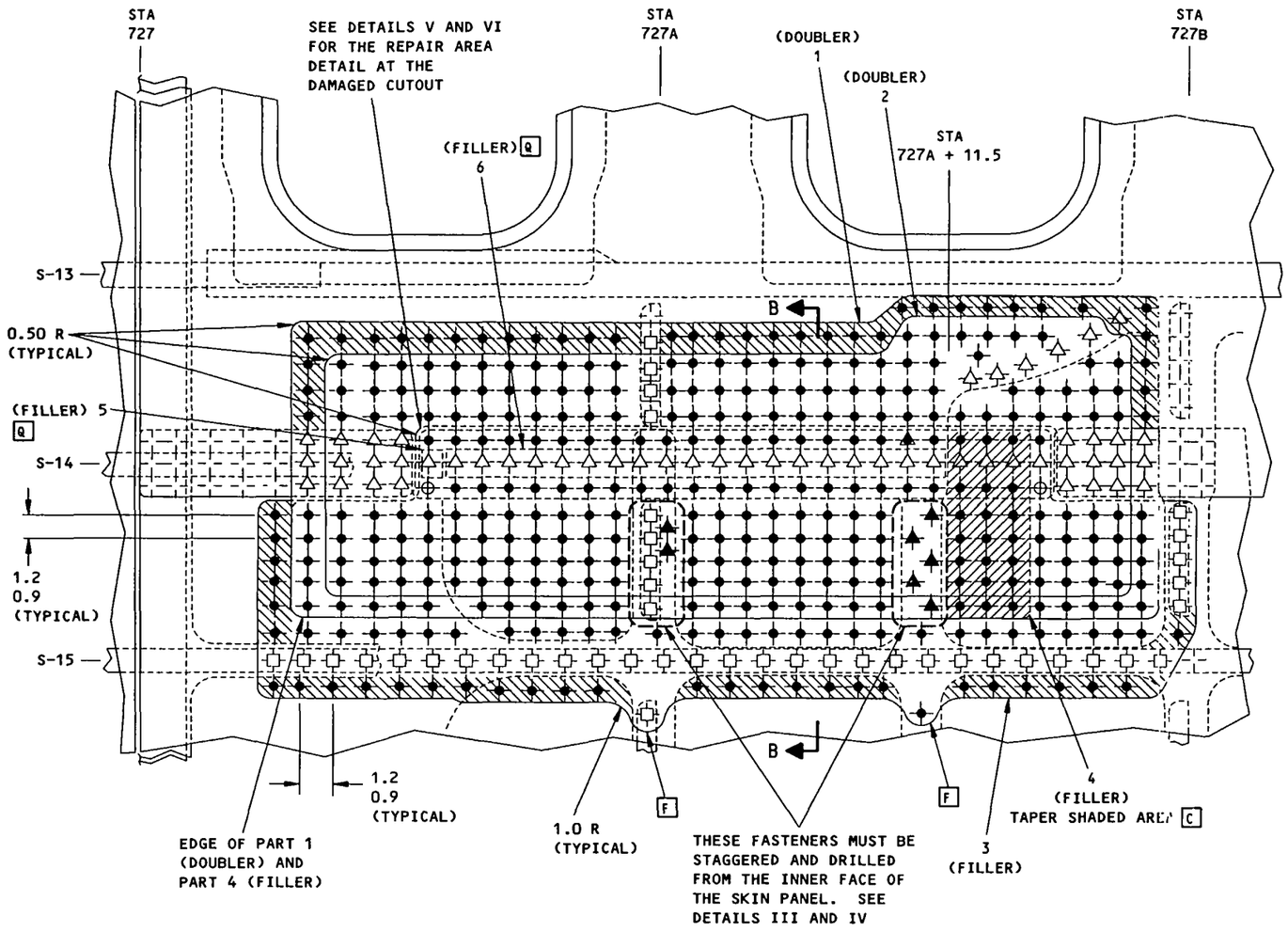

TAPERED SECTION OF FILLER 4 C

CRITICAL FASTENER ROW

SUBSEQUENT INSPECTIONS ARE NECESSARY FOR CATEGORY B REPAIRS. REFER TO TABLE IV FOR INSPECTION REQUIREMENTS

REPAIR FOR DAMAGE AT STR S-14
DETAIL II L N P

Fuselage Skin, Longitudinal Splice -
Repair for Damaged Lower Skin at S-10 and S-14 Between BS 727 and BS 727B
Figure 44 (Sheet 7)

BOEING PROPRIETARY - Copyright © - Unpublished Work - See title page for details.

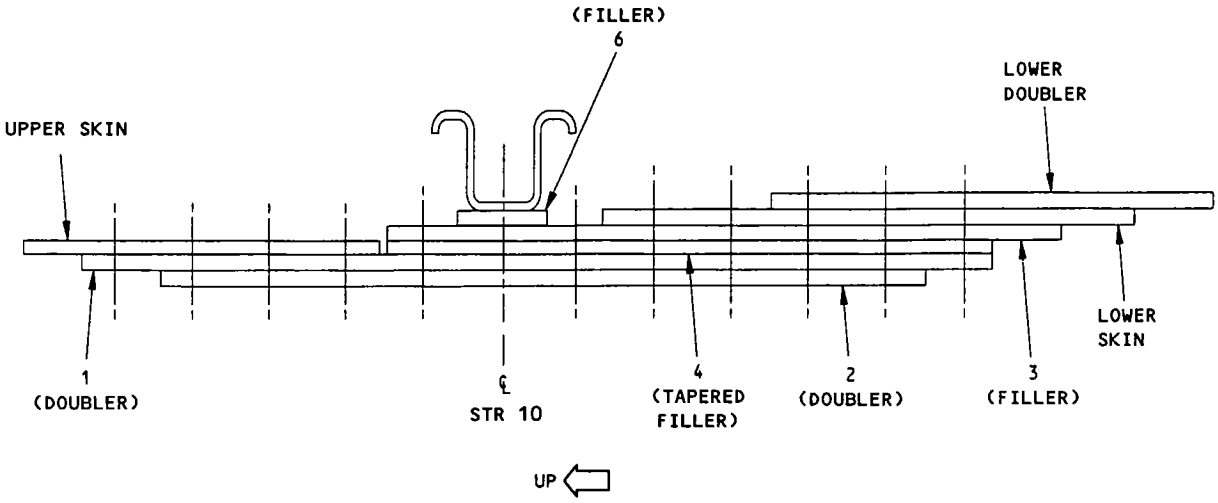

(ROTATED 90° CCW)
SECTION A-A

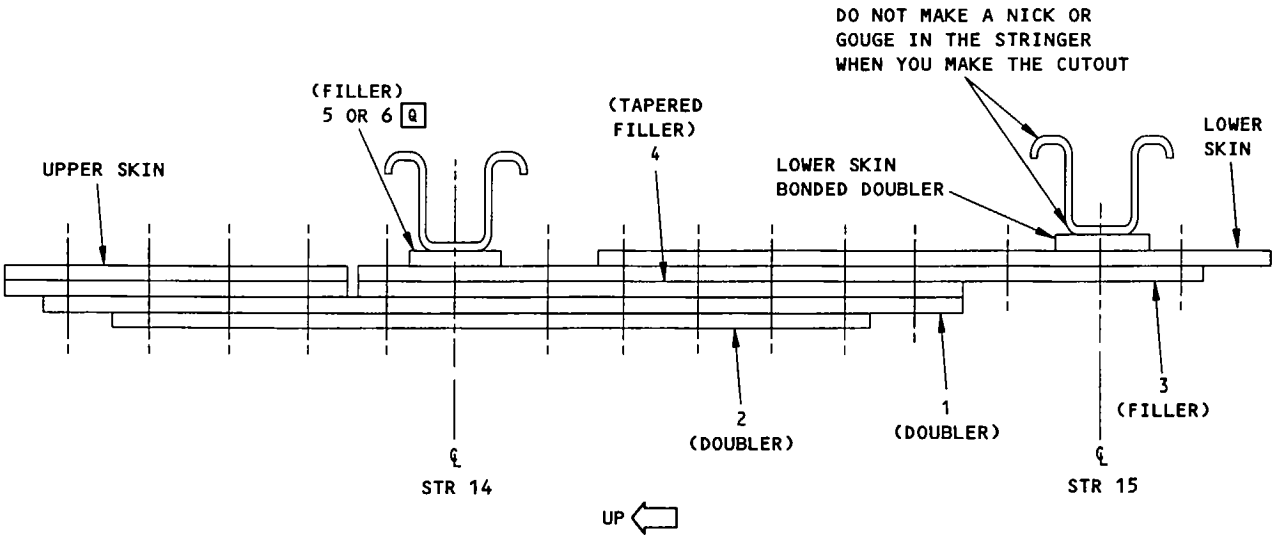

(ROTATED 90° CCW)
SECTION B-B

Fuselage Skin, Longitudinal Splice -
Repair for Damaged Lower Skin at S-10 and S-14 Between BS 727 and BS 727B
Figure 44 (Sheet 8)

BOEING PROPRIETARY - Copyright © - Unpublished Work - See title page for details.

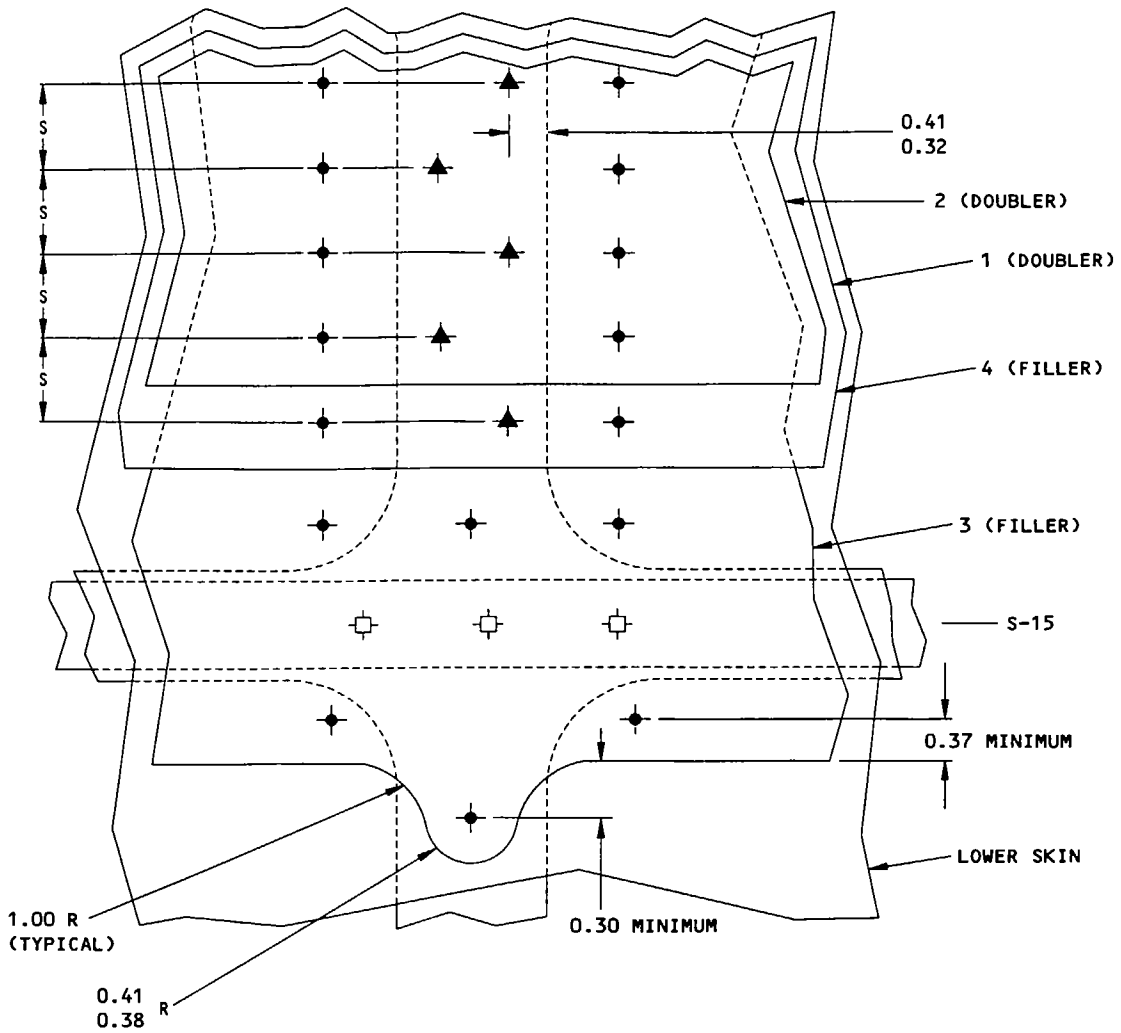

BOTTOM TAB GEOMETRY AND FASTENER LOCATIONS THRU A TEAR STRAP
STRINGER S-14 REPAIR AT STA 727A+10

DETAIL III

Fuselage Skin, Longitudinal Splice -
Repair for Damaged Lower Skin at S-10 and S-14 Between BS 727 and BS 727B
Figure 44 (Sheet 9)

BOEING PROPRIETARY - Copyright © - Unpublished Work - See title page for details.

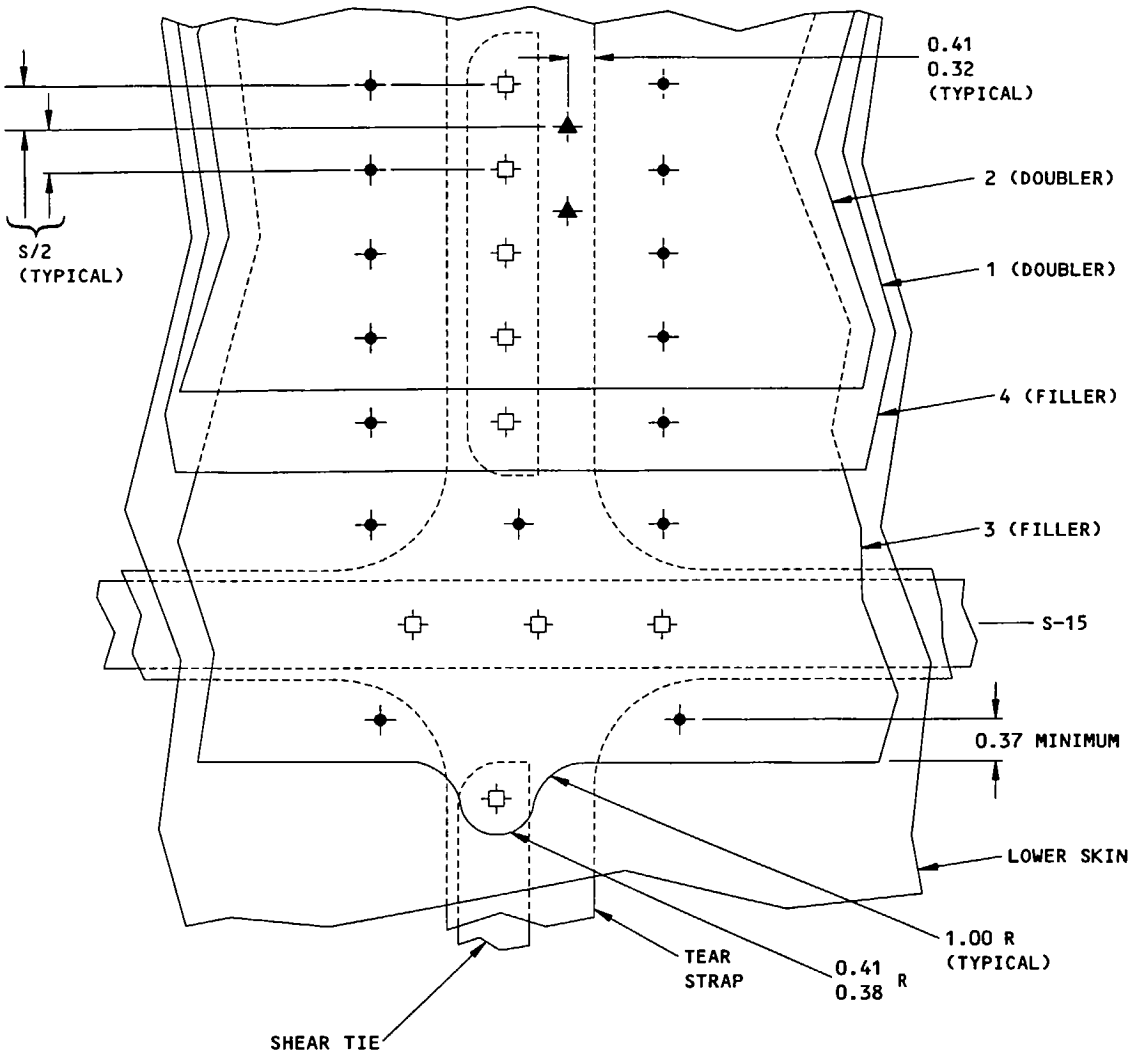

BOTTOM TAB GEOMETRY AND FASTENER LOCATIONS THRU A TEAR STRAP
STRINGER S-14 REPAIR AT STA 727A
DETAIL IV

Fuselage Skin, Longitudinal Splice -
Repair for Damaged Lower Skin at S-10 and S-14 Between BS 727 and BS 727B
Figure 44 (Sheet 10)

BOEING PROPRIETARY - Copyright © - Unpublished Work - See title page for details.

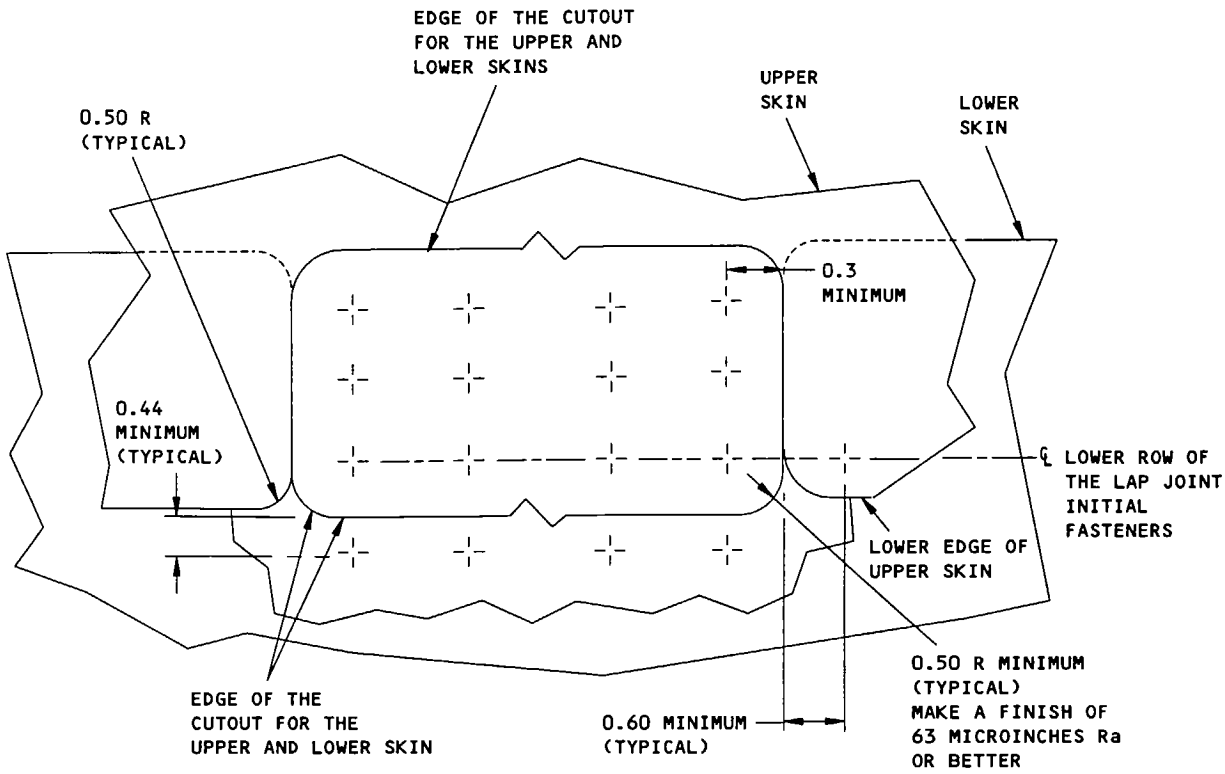

TYPICAL CUTOUT CONFIGURATION
DETAIL V

Fuselage Skin, Longitudinal Splice -
Repair for Damaged Lower Skin at S-10 and S-14 Between BS 727 and BS 727B
Figure 44 (Sheet 11)

BOEING PROPRIETARY - Copyright © - Unpublished Work - See title page for details.

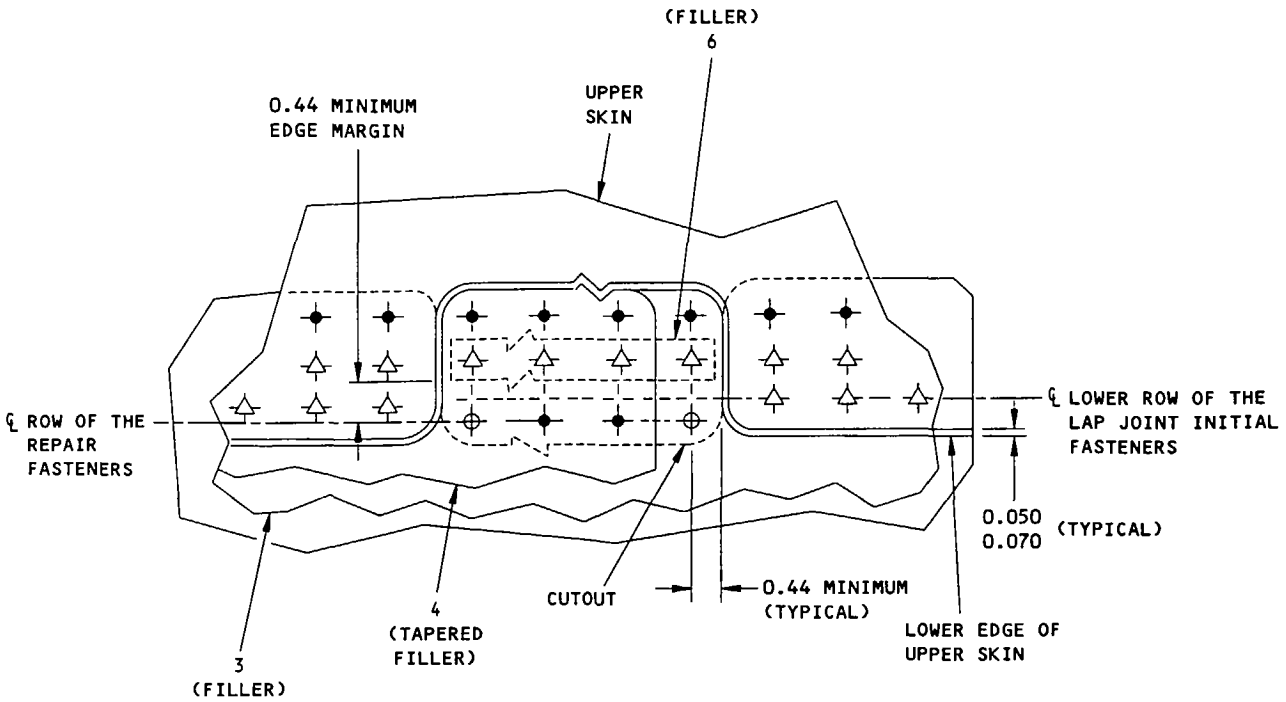

TYPICAL FASTENER LOCATION CONFIGURATION
DETAIL VI

Fuselage Skin, Longitudinal Splice -
Repair for Damaged Lower Skin at S-10 and S-14 Between BS 727 and BS 727B
Figure 44 (Sheet 12)

BOEING PROPRIETARY - Copyright © - Unpublished Work - See title page for details.

CATEGORY B REPAIR AND SSI F-39H INSPECTION REQUIREMENTS		
INSPECTION THRESHOLD	REPEAT INSPECTION ALTERNATIVES	
	METHOD	INTERVAL
0	J	J
NOTE: INSPECT THE SKIN, TEARSTRAP, AND BONDED DOUBLER, AT THE FIRST ROW OF FASTENERS ALONG THE EDGE OF THE PART 1 DOUBLER AND PART 3 FILLER AS SHOWN IN DETAILS VII OR VIII, AS APPLICABLE.		

TABLE IV

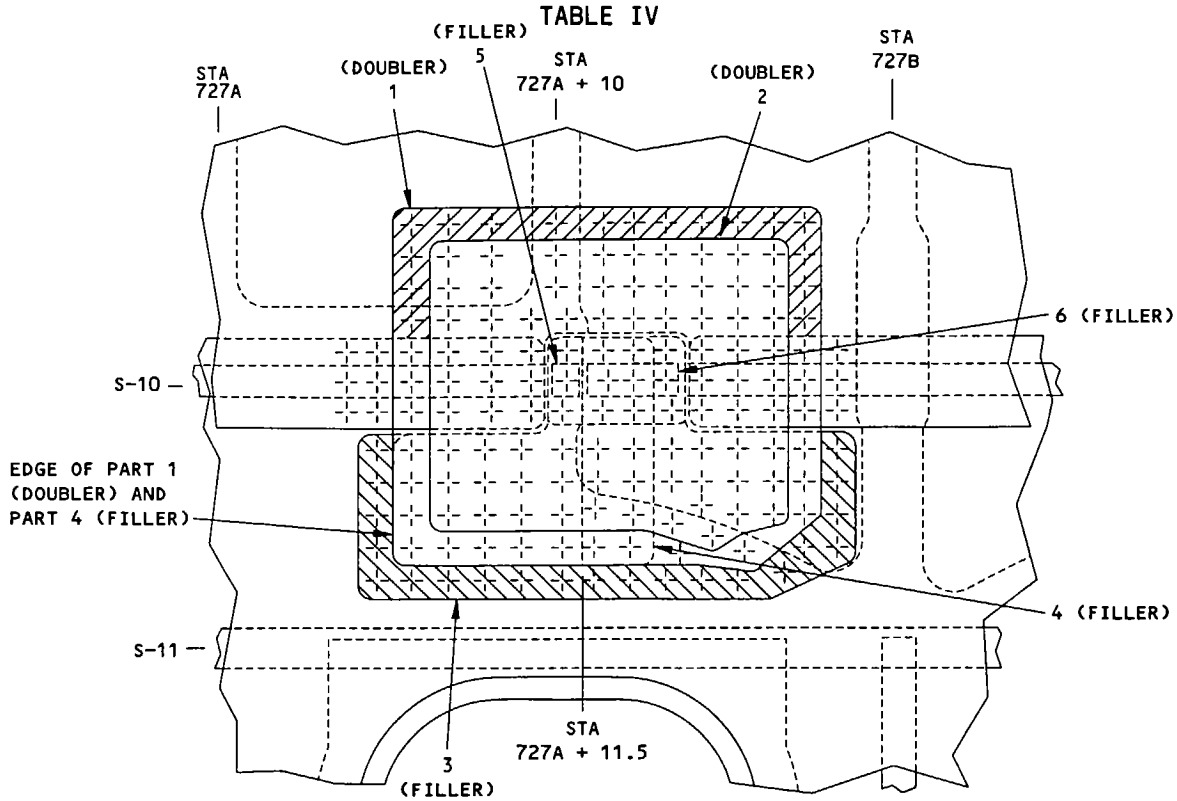

UPPER SKIN AND TEARSTRAP INSPECTION AREA
- FOR MEDIUM FREQUENCY EDDY CURRENT (MFEC) OR DETAILED VISUAL METHOD, INSPECT THE UPPER SKIN AND TEAR STRAP INTERNALLY ALONG THE OUTER FASTENER ROWS EXCEPT FOR THE SKIN AND TEARSTRAP UNDER THE INTERNAL STRUCTURE.
- FOR LOW FREQUENCY EDDY CURRENT (LFEC) METHOD, INSPECT THE UPPER SKIN EXTERNALLY THROUGH PART 1 DOUBLER ALONG THE ENTIRE OUTER FASTENER ROWS.

LOWER SKIN AND TEARSTRAP INSPECTION AREA
- FOR MFEC OR DETAILED VISUAL METHOD, INSPECT THE LOWER SKIN AND TEARSTRAP INTERNALLY ALONG THE OUTER FASTENER ROWS EXCEPT FOR THE SKIN AND TEARSTRAP UNDER THE INTERNAL STRUCTURE.
- FOR LFEC METHOD, INSPECT THE LOWER SKIN EXTERNALLY THROUGH PART 3 STRUCTURAL FILLER ALONG THE ENTIRE OUTER FASTENER ROWS.

INSPECTION AREAS FOR DETAIL I
DETAIL VII

Fuselage Skin, Longitudinal Splice -
Repair for Damaged Lower Skin at S-10 and S-14 Between BS 727 and BS 727B
Figure 44 (Sheet 13)

BOEING PROPRIETARY - Copyright © - Unpublished Work - See title page for details.

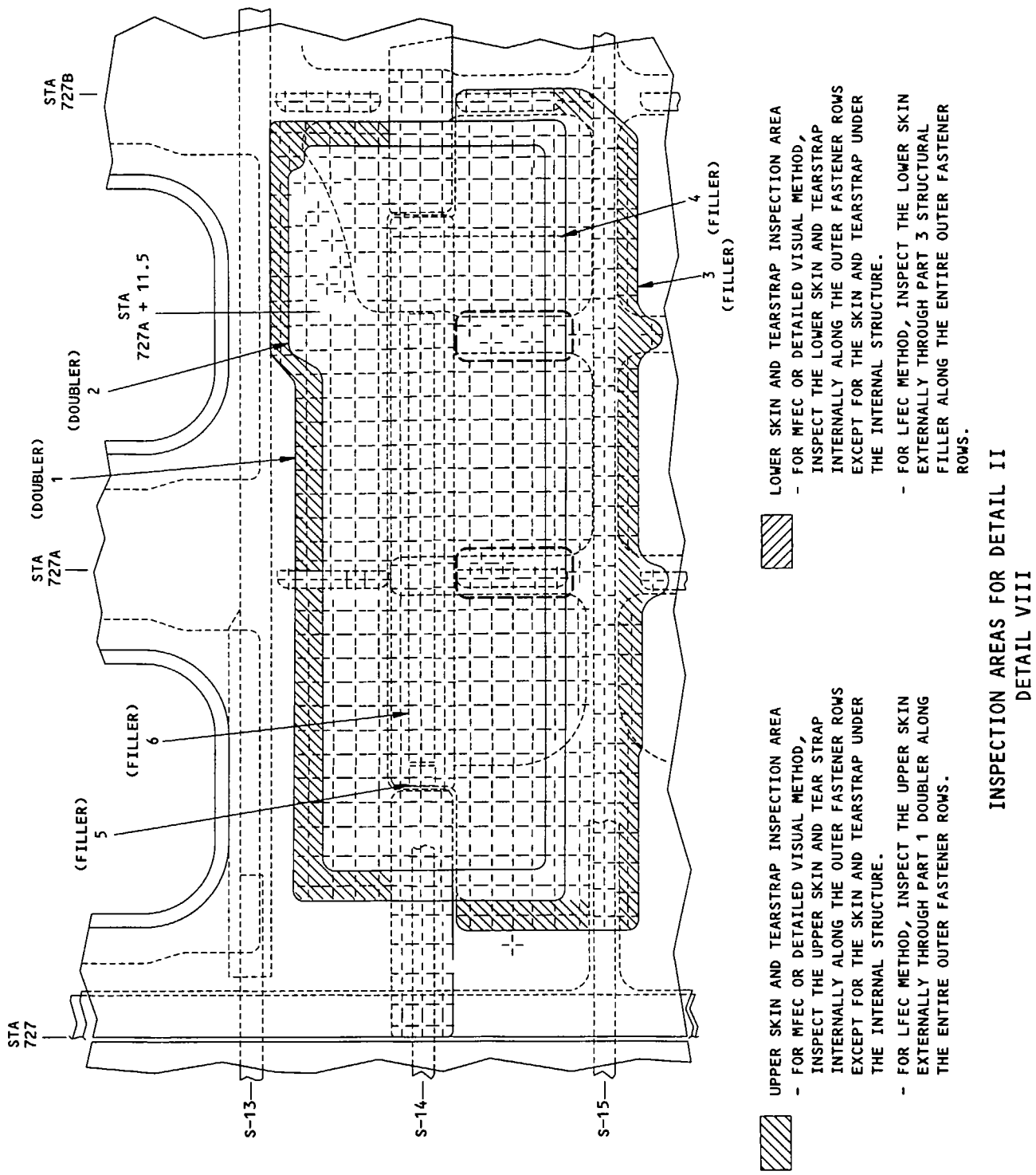

Fuselage Skin, Longitudinal Splice -
Repair for Damaged Lower Skin at S-10 and S-14 Between BS 727 and BS 727B
Figure 44 (Sheet 14)

BOEING PROPRIETARY - Copyright © - Unpublished Work - See title page for details.

APPLICABILITY

THIS REPAIR APPLIES TO AIRPLANES THAT HAVE A CRACK IN THE SKIN, DOUBLER AND BEAR STRAP.

THIS REPAIR DOES NOT APPLY IF THE DAMAGE IS LARGER THAN THE PERMITTED CUTOUT. THE MAXIMUM PERMITTED CUTOUT IS SHOWN IN DETAIL VI.

REPAIR INSTRUCTIONS

PART I - TRIM OFF THE UPPER SKIN TAB F

1. Remove all the fasteners that are common to the repair as necessary to trim off the tab in the upper skin panel. See Detail III.

WARNING: WEAR PROTECTIVE CLOTHING AND EYE PROTECTION WHEN YOU USE SOLID CARBON DIOXIDE (DRY ICE). MAKE SURE YOU HAVE SUFFICIENT VENTILATION AND DO NOT USE DRY ICE IN AN ENCLOSED SPACE. DRY ICE CAN INJURE YOUR SKIN OR CAUSE BREATHING PROBLEMS.

CAUTION: USE SPECIAL CARE TO CUT AND REMOVE THE UPPER SKIN PANEL TAB. DO NOT GOUGE, SCRATCH, OR BUCKLE THE STRUCTURE ADJACENT TO THE TAB. IF YOU DAMAGE THE ADJACENT STRUCTURE, MORE REPAIR WORK WILL BE NECESSARY.

2. Carefully drive nylon or hardwood wedges between the upper skin panel and the lower skin panel in the repair area. Use sufficient wedges to gradually separate the parts and prevent buckling.

   NOTE: To help separate the sealed parts, cold soak the area with solid carbon dioxide (dry ice) for approximately 30 minutes before you use the wedges.

3. Carefully cut off the upper skin panel tab. Use a thin steel sheet between the upper skin panel and the lower skin panel to prevent damage to the adjacent structure. Make the cut continuous with the skin edge forward of the skin tab. Do not damage the lower skin. See Detail III.
4. Remove all nicks, scratches, gouges, burrs, and sharp edges from the cut edge of the skin.
5. Remove the steel sheet.
6. Apply a chemical conversion coating to the cut edge of the skin. Refer to SRM 51-10-2.
7. Apply one layer of BMS 10-79, Type II primer to the cut edge of the skin. Refer to SOPM 20-44-04.
8. Remove the wedges.

PART II - REPAIR INSTRUCTIONS F

1. Remove the fasteners that remain from the repair area as shown in Detail IV. If necessary (to move the bear strap apart from the outboard chord of the body station 951 frame) remove more fasteners that are installed through the bear strap and the frame chord.

WARNING: WEAR PROTECTIVE CLOTHING AND EYE PROTECTION WHEN YOU USE SOLID CARBON DIOXIDE (DRY ICE). MAKE SURE YOU HAVE SUFFICIENT VENTILATION AND DO NOT USE DRY ICE IN AN ENCLOSED SPACE. DRY ICE CAN INJURE YOUR SKIN OR CAUSE BREATHING PROBLEMS.

CAUTION: USE SPECIAL CARE TO CUT AND REMOVE THE DAMAGED PART OF THE BEAR STRAP. DO NOT GOUGE, SCRATCH, OR BUCKLE THE STRUCTURE ADJACENT TO THE CUTOUT. IF YOU DAMAGE THE ADJACENT STRUCTURE MORE REPAIR WORK WILL BE NECESSARY.

2. Carefully drive nylon or hardwood wedges between the bear strap and the outboard chord of the body station 951 frame in the repair area. Use sufficient wedges to gradually separate the parts and prevent buckling.

   NOTE: To help separate the sealed parts, cold soak the area with solid carbon dioxide (dry ice) for approximately 30 minutes before you use the wedges.

3. Carefully cut out the damaged part of the bear strap and the small mating area of the lower skin and bonded doubler. See Details V and VI. Use a thin steel sheet between the bear strap and the outboard chord of the body station 951 frame to prevent damage to the adjacent structure.
4. Do a high frequency eddy current inspection along the edge of the cutout area to make sure there are no cracks. If there are no cracks, make the cutout larger by 0.04 inch. Refer to NDT Part 6, 51-00-00, Fig. 4, for the high frequency eddy current inspection procedure.
5. Remove the steel sheet.
6. Remove the wedges.

Skin, Doubler, and Bear Strap Repair at the Aft Galley and Entry Doors Lower Hinge
Figure 45 (Sheet 1)

BOEING PROPRIETARY - Copyright © - Unpublished Work - See title page for details.

REPAIR INSTRUCTIONS PART II (CONT)

7. Do the inspections that follow:
   - Do a High Frequency Eddy Current (HFEC) inspection for skin cracks along the fasteners at the skin lap joints where fastener holes are countersunk into the skin at repair area. Refer to NDT Part 6, 53-30-00, Figure 1. At the lower row of skin splice do an open hole inspection as given in NDT Manual Part 6, 51-00-00, Figure 16.
   - Do an external close visual inspection of each skin lap joint for cracks, and evidence of corrosion or delamination. Look for bulges in the skin between blistered paint, dished or popped rivet heads, or loose fasteners.
   - Do an internal inspection of the bonded tear strap/doubler. Look for delamination and evidence of corrosion in an area of two stringer bays above and one below the skin lap joints.
   - If you find cracks, evidence of corrosion or delamination, contact Boeing.
8. Make the repair parts. See Details V and VII and Table I. Make sure the repair parts match the contour of the skin.
9. Assemble the aluminum repair parts.

CAUTION: YOU CAN BACK DRILL THROUGH THE PART 1 ALUMINUM FILLER AND THE PART 4 ALUMINUM FILLER. DO NOT BACK DRILL THROUGH THE PART 2 STEEL DOUBLER OR THE PART 3 STEEL TRIPLER. THE STEEL SHAVINGS CAN CAUSE DAMAGE TO THE HOLES IN THE ALUMINUM PARTS. USE ANOTHER PROCEDURE TO DRILL THE HOLES THROUGH THE STEEL PARTS, SUCH AS THE HOLE-LOCATING TEMPLATE PROCEDURE OR THE HOLE-FINDER PROCEDURE. REFER TO SRM 51-30 FOR THE HOLE-FINDER TOOL.

10. Drill the fastener holes through the aluminum repair parts. See Detail V. [E]
11. If you use the hole-finder tool, put the steel doubler and the steel tripler in position on the airplane. Drill the fastener holes through the part 2 (Doubler) and the part 3 (Tripler).
12. Remove the repair parts.
13. Drive the wedges again and put the steel sheet in position again.
14. Remove all nicks, scratches, gouges, burrs, and sharp edges from the repair parts, the bear strap, and the skin panels. Make sure the 0.75 radius on repair parts 1, 2, and 3, and the edge of the crack cutout have a finish of 63 microinches Ra or smoother.
15. Remove the steel sheet.
16. Apply a chemical conversion coating to the part 1 (Filler), the part 4 (Filler), and the bare surfaces of the skin panels. Refer to SRM 51-10-2.
17. Apply cadmium plating to the repair parts 2 and 3. Refer to SRM 51-10-2. As a less preferred alternative, do not apply cadmium plating to the parts 2 and 3 and continue with Step 18.
18. Apply two layers of BMS 10-79, Type II primer to the repair parts 2 and 3. Apply one layer of BMS 10-79, Type II primer to the part 1 (Filler),the part 4 (Filler), and the bare surfaces of the skin panels. Refer to SOPM 20-44-04.
19. Apply BMS 5-95 sealant to the mating surfaces between the bear strap and the outboard chord of the body station 951 frame in the repair area.
20. Apply BMS 5-95 sealant to all of the mating surfaces between the upper skin panel and the lower skin panel.
21. Remove the wedges.
22. Install the fasteners at the ⊹ locations as shown in Detail IV. Install the rivets without sealant. [G]
23. If you removed reference fasteners -|- in Step 1 as shown in Detail IV, replace them with fasteners of the same type and diameter.
24. Install the repair washers in the countersink holes in the skin panels. Install them with BMS 5-95 sealant. Refer to SRM 51-30-08.
25. Assemble the repair parts with BMS 5-95 sealant on all of the mating surfaces. Put BMS 5-95 sealant in the gap between the part 1 (Filler) and the upper skin. Put sealant in the gap all around the edge of part 4. The maximum permitted space between the mating surfaces is 0.010 inch before installation of the fasteners. Use shims if necessary. Install the shims with BMS 5-95 sealant on the mating surfaces.

Skin, Doubler, and Bear Strap Repair at the Aft Galley and Entry Doors Lower Hinge
Figure 45 (Sheet 2)

BOEING PROPRIETARY - Copyright © - Unpublished Work - See title page for details.

25. Install the hex drive bolts wet with BMS 5-95 sealant. Install the hex drive bolts that go through only aluminum parts in transition fit holes. Install the hex drive bolts that go through the part 2 doubler or the part 3 tripler in close ream holes. Torque the bolts to 25 to 35 inch pounds.
26. Retorque the hex drive bolts in less than the squeeze-out time for the sealant as given in the BMS 5-95 specification. Refer to SRM 51-30.
27. Apply a layer of finish to the repair area. Refer to AMM 51-21.
28. Apply BMS 3-23, Type 2 corrosion inhibiting compound to the inner surface of the repair area. Refer to SRM 51-10-2.

NOTES

- REPAIRS MADE IN ACCORDANCE WITH THIS REPAIR FIGURE ARE ALTERNATE MEANS OF COMPLIANCE TO:
  - SB 737-53-1076 AND FAA AD 92-25-09, AMENDMENT 39-8424 AND AMENDMENT 39-6978 IN THE AREAS COVERED BY THIS REPAIR;
  - SB 737-53A1039 AND FAA AD 88-22-11 R1, AMENDMENT 39-6432 AND AD 89-09-03, AMENDMENT 39-6184; AND
  - SB 737-53A1177 AND FAA AD 97-22-07, AMENDMENT 39-10179 IN THE AREAS OF SKIN LAP JOINT COVERED BY THIS REPAIR.
- THIS REPAIR IS CATEGORY B. THE CATEGORY B REPAIR HAS FAA APPROVAL IF YOU DO THE SUPPLEMENTAL INSPECTIONS GIVEN IN TABLE II. INCORPORATION OF THESE INSPECTION REQUIREMENTS INTO THE AIRPLANE'S MAINTENANCE PROGRAM SATISFIES THE DAMAGE TOLERANCE ASSESSMENT OF THE REPAIR SPECIFIED BY THE REPAIR ASSESSMENT PROGRAM. REFER TO SRM 51-00-6 FOR GENERAL DATA ABOUT THE REPAIR ASSESSMENT PROGRAM. SEE DETAIL VIII FOR THE INSPECTION AREA.
- THIS REPAIR WILL HAVE AN EFFECT ON THE STRUCTURAL SIGNIFICANT ITEM (SSI):
  - NUMBER F-16A, B AND C WHEN INSTALLED AT THE AFT GALLEY DOOR CUTOUT, BUT THE SUPPLEMENTAL INSPECTIONS GIVEN IN TABLE II WILL MEET THE SSID INSPECTION REQUIREMENTS FOR F-16A IN THE REPAIR AREA. HOWEVER, THE INTERNAL INSPECTION ALTERNATIVES FOR F-16B AND C ARE STILL APPLICABLE. ALSO, A NEW INSPECTION METHOD IS NECESSARY FOR THE EXTERNAL INSPECTIONS OF F-16C. SEE TABLE III FOR NEW REQUIREMENTS FOR F-16C.
  - NUMBER F-17A, B AND C WHEN INSTALLED AT THE AFT ENTRY DOOR CUTOUT WITHOUT AIRSTAIRS, BUT THE SUPPLEMENTAL INSPECTIONS GIVEN IN TABLE II WILL MEET THE SSID INSPECTION REQUIREMENTS FOR F-17A IN THE REPAIR AREA. HOWEVER, THE INTERNAL INSPECTION ALTERNATIVES FOR F-17B AND C ARE STILL APPLICABLE. ALSO, A NEW INSPECTION METHOD IS NECESSARY FOR THE EXTERNAL INSPECTIONS OF F-17C. SEE TABLE III FOR NEW REQUIREMENTS FOR F-17C.

  DO THE INTERNAL INSPECTIONS FOR F-16B AND C, AND F-17B AND C, IF NECESSARY, AT THE SUBSEQUENT SUPPLEMENTAL STRUCTURAL INSPECTION DOCUMENT (SSID) INSPECTION ON THIS AIRPLANE. REFER TO SRM 51-00-4, FIGURE 3 FOR THE APPLICABLE SSI DATA.
- ALL MACHINED SURFACES MUST HAVE A FINISH OF 125 MICROINCHES Ra, OR SMOOTHER, UNLESS OTHERWISE SPECIFIED.
- AFT GALLEY DOOR IS SHOWN. ENTRY DOOR IS OPPOSITE.
- ALL DIMENSIONS ARE IN INCHES, UNLESS SHOWN DIFFERENTLY.
- D = FASTENER DIAMETER
- WHEN YOU USE THIS REPAIR, REFER TO:
  - AMM 51-21 FOR INTERIOR AND EXTERIOR FINISHES
  - NDT PART 6, 51-00-00, FIGURE 4, HIGH FREQUENCY EDDY CURRENT (HFEC) FOR SURFACE INSPECTION OF ALUMINUM PARTS
  - NDT PART 6, 51-00-00, FIGURE 16, (HFEC) FOR ALUMINUM PART FASTENER HOLE INSPECTION
  - NDT PART 6, 53-30-00, FIGURE 1, (HFEC) INSPECTION FOR COUNTERSINK IN ALUMINUM PARTS
  - SOPM 20-44-04 FOR APPLICATION OF URETHANE COMPATIBLE FINISHES
  - SRM 51-00-4 FOR STRUCTURAL CLASSIFICATION
  - SRM 51-00-6 FOR REPAIR CATEGORIES, DEFINITIONS AND REPAIR ASSESSMENT PROGRAM INFORMATION
  - SRM 51-10-2 FOR PROTECTIVE TREATMENT OF METALS
  - SRM 51-20-4 FOR REPAIR SEALING
  - SRM 51-30 FOR FASTENER CODE, REMOVAL AND INSTALLATION, HOLE SIZES, EDGE MARGINS AND SUBSTITUTION
  - SRM 51-30-8 FOR COUNTERSINKING
  - SRM 51-40-5 FOR REPAIR OF BONDED METAL STRUCTURE
  - SRM 51-70 FOR AERODYNAMIC SMOOTHNESS

Skin, Doubler, and Bear Strap Repair at the Aft Galley and Entry Doors Lower Hinge
Figure 45 (Sheet 3)

BOEING PROPRIETARY - Copyright © - Unpublished Work - See title page for details.

NOTES (CONT)

[A] MAKE THE THICKNESS OF PART 4 EQUAL TO THE TOTAL THICKNESS OF THE BEAR STRAP PLUS LOWER SKIN PLUS LOWER BONDED DOUBLER AT THE DAMAGE LOCATION.

[B] THIS DETAIL SHOWS THE MAXIMUM PERMITTED CUTOUT. IF THE DAMAGE CANNOT BE REMOVED WITH THIS CUTOUT, TELL THE BOEING COMPANY.

[C] MAKE THE THICKNESS OF PART 1 EQUAL TO THE THICKNESS OF THE UPPER SKIN ASSEMBLY.

[D] MAKE THE EDGE HAVE A FINISH OF 63 MICRO-INCHES R_a OR SMOOTHER.

[E] WHEN YOU DRILL NEW FASTENER HOLES USE CARE NOT TO DRILL NEAR THE EDGE OF THE BEAR STRAP.

[F] IF THERE IS A TAB ON THE UPPER SKIN PANEL ADJACENT TO THE LOWER HINGE ARM LOCATION, DO PART I AND PART II OF THE REPAIR INSTRUCTIONS. IF THERE IS NOT A TAB AT THAT LOCATION, DO ONLY PART II OF THE REPAIR INSTRUCTIONS.

[G] REPLACE THESE FASTENERS (AT THE ⊹ LOCATIONS) ONLY IF THE FASTENERS WERE REMOVED AT THESE LOCATIONS TO CUT OFF THE TAB AS GIVEN IN PART I OF THE REPAIR INSTRUCTIONS.

[H] DO NOT CHAMFER THE EDGES AT THE DOOR CUTOUT. CHAMFER ALL OTHER EDGES THAT ARE NOT ADJACENT TO THE LOWER EDGE OF THE UPPER SKIN PANEL.

[J] IF THE AIRPLANE HAS LESS THAN 66,000 FLIGHT CYCLES, THE INSPECTION THRESHOLD IS THE EARLIER OF:

- THE INITIAL SCHEDULED INSPECTION AS GIVEN IN THE OPERATOR'S REPAIR ASSESSMENT PROGRAM (RAP)
- 66,000 FLIGHT CYCLES.

IF THE AIRPLANE HAS MORE THAN 66,000 FLIGHT CYCLES AND THE INITIAL SCHEDULED SUPPLEMENTAL STRUCTURAL INSPECTION DOCUMENT (SSID) INSPECTION HAS BEEN PERFORMED, THE INSPECTION THRESHOLD IS:

- THE NEXT SCHEDULED SSID INSPECTION FOR THE STRUCTURALLY SIGNIFICANT ITEMS F-16A AND F-17A IN THE REPAIRED AREA.

[K] ENTRY DOOR ONLY.

[L] THE UPPER SKIN WITH A TAB RIVET PATTERN IS SHOWN. THE UPPER SKIN WITH NO TAB HAS 3 ROWS OF FASTENERS INSTEAD OF 4 ROWS OF FASTENERS.

[M] IF THE AIRPLANE HAS MORE THAN 66,000 FLIGHT CYCLES, DO THE NEW INSPECTION ALTERNATIVE AT THE SUBSEQUENT SCHEDULED SSID INSPECTION FOR F-16 AND F-17 ON THIS AIRPLANE.

FASTENER SYMBOLS

REFERENCE FASTENER LOCATION. IF THEY ARE REMOVED, INSTALL THE SAME TYPE AND DIAMETER FASTENER.

INITIAL FASTENER LOCATION. REMOVE THE FASTENER.

INITIAL FASTENER LOCATION. INSTALL A BACB30FQ6A HEX DRIVE BOLT WITH A BACC30M6 COLLAR (1/64 OVERSIZE). IF THE FASTENER HOLE GETS DAMAGED, YOU CAN USE A 1/32 OVERSIZE BACB30KF6A HEX DRIVE BOLT WITH A BACC30R6 COLLAR.

INITIAL LAP JOINT FASTENER LOCATION. INSTALL A BACR15BB8AD RIVET. RIVETS AT THE LAP JOINT MUST BE OVERDRIVEN TO 1.4D MINIMUM BUTTON DIAMETER.

INITIAL FASTENER LOCATION. INSTALL A BACB30FQ6A HEX DRIVE BOLT WITH A BACC30M6 COLLAR (1/64 OVERSIZE). IF THE FASTENER HOLE GETS DAMAGED, YOU CAN USE A 1/32 OVERSIZE BACB30KF6A HEX DRIVE BOLT WITH A BACC30R6 COLLAR.

REPAIR FASTENER LOCATION. INSTALL A BACB30FN6A HEX DRIVE BOLT WITH A BACC30M6 COLLAR [E].

INITIAL LAP JOINT FASTENER LOCATION. INSTALL A BACB30FP8A HEX DRIVE BOLT WITH A BACC30M8 COLLAR.

REPAIR MATERIAL			
PART		QTY	MATERIAL
1	FILLER	1	2024-T3 CLAD [C]
2	DOUBLER	1	0.063 CRES 1/2 HARD 301
3	TRIPLER	1	0.063 CRES 1/2 HARD 301
4	FILLER	1	2024-T3 CLAD [A]

TABLE I

Skin, Doubler, and Bear Strap Repair at the Aft Galley and Entry Doors Lower Hinge
Figure 45 (Sheet 4)

BOEING PROPRIETARY - Copyright © - Unpublished Work - See title page for details.

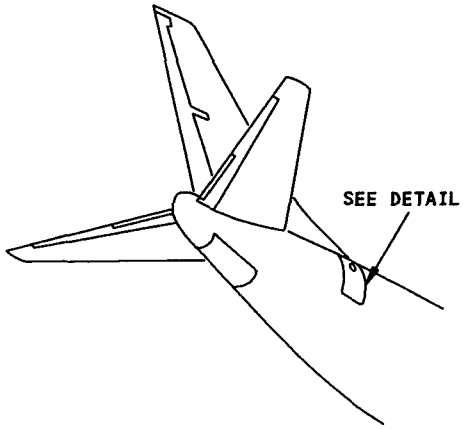

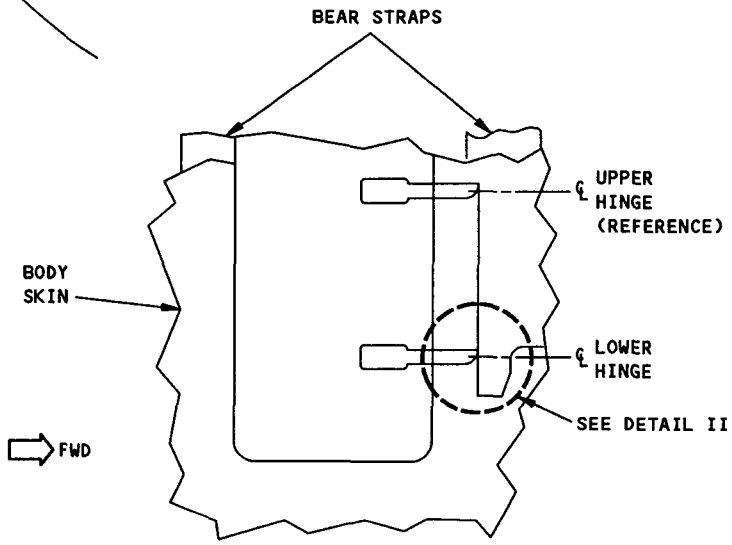

AFT GALLEY DOOR LOWER HINGE AREA IS SHOWN
ENTRY DOOR IS OPPOSITE
DETAIL I

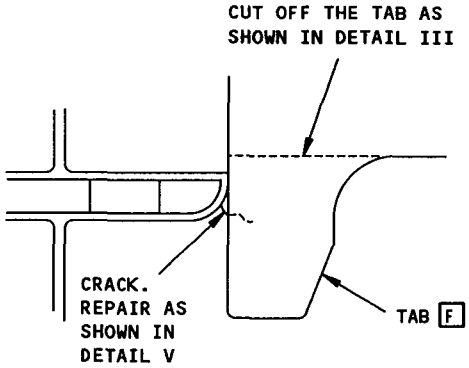

DETAIL II

Skin, Doubler, and Bear Strap Repair at the Aft Galley and Entry Doors Lower Hinge
Figure 45 (Sheet 5)

BOEING PROPRIETARY - Copyright © - Unpublished Work - See title page for details.

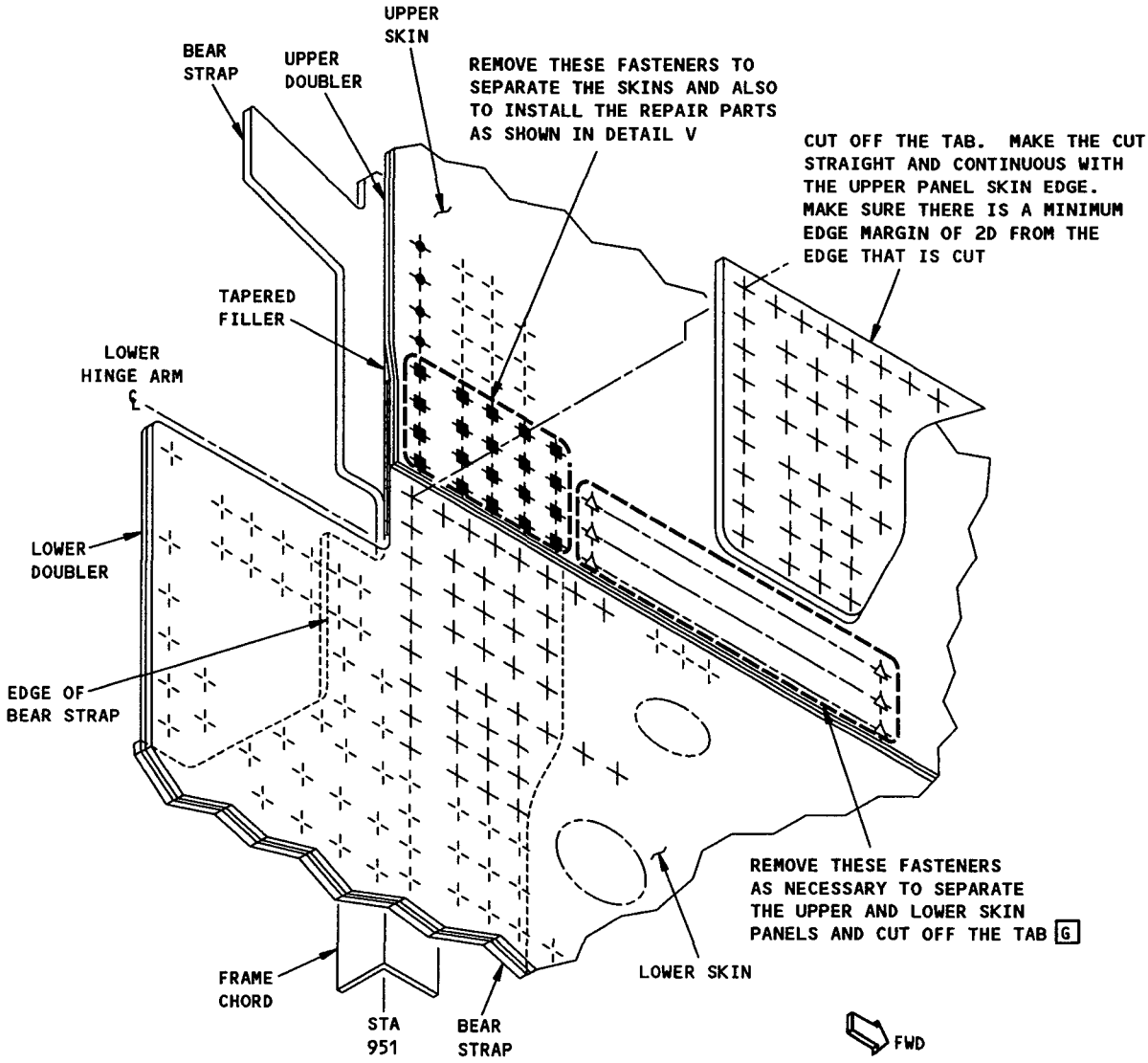

REMOVAL OF THE UPPER SKIN PANEL TAB F
DETAIL III

Skin, Doubler, and Bear Strap Repair at the Aft Galley and Entry Doors Lower Hinge
Figure 45 (Sheet 6)

BOEING PROPRIETARY - Copyright © - Unpublished Work - See title page for details.

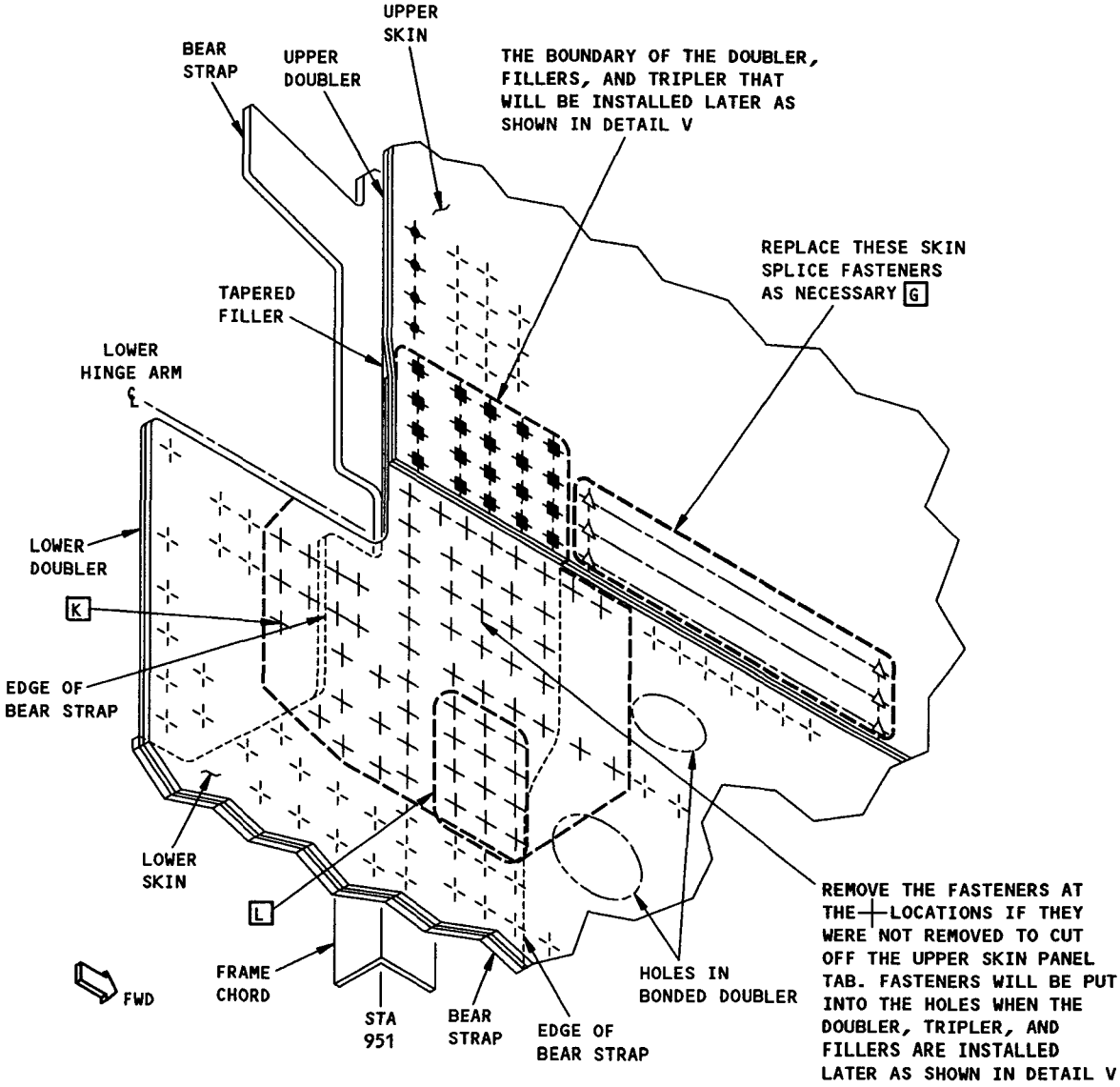

REMOVAL AND INSTALLATION OF FASTENERS F
DETAIL IV

Skin, Doubler, and Bear Strap Repair at the Aft Galley and Entry Doors Lower Hinge
Figure 45 (Sheet 7)

BOEING PROPRIETARY - Copyright © - Unpublished Work - See title page for details.

SUBSEQUENT INSPECTIONS ARE NECESSARY FOR CATEGORY B REPAIR. REFER TO TABLE II FOR INSPECTION REQUIREMENTS.

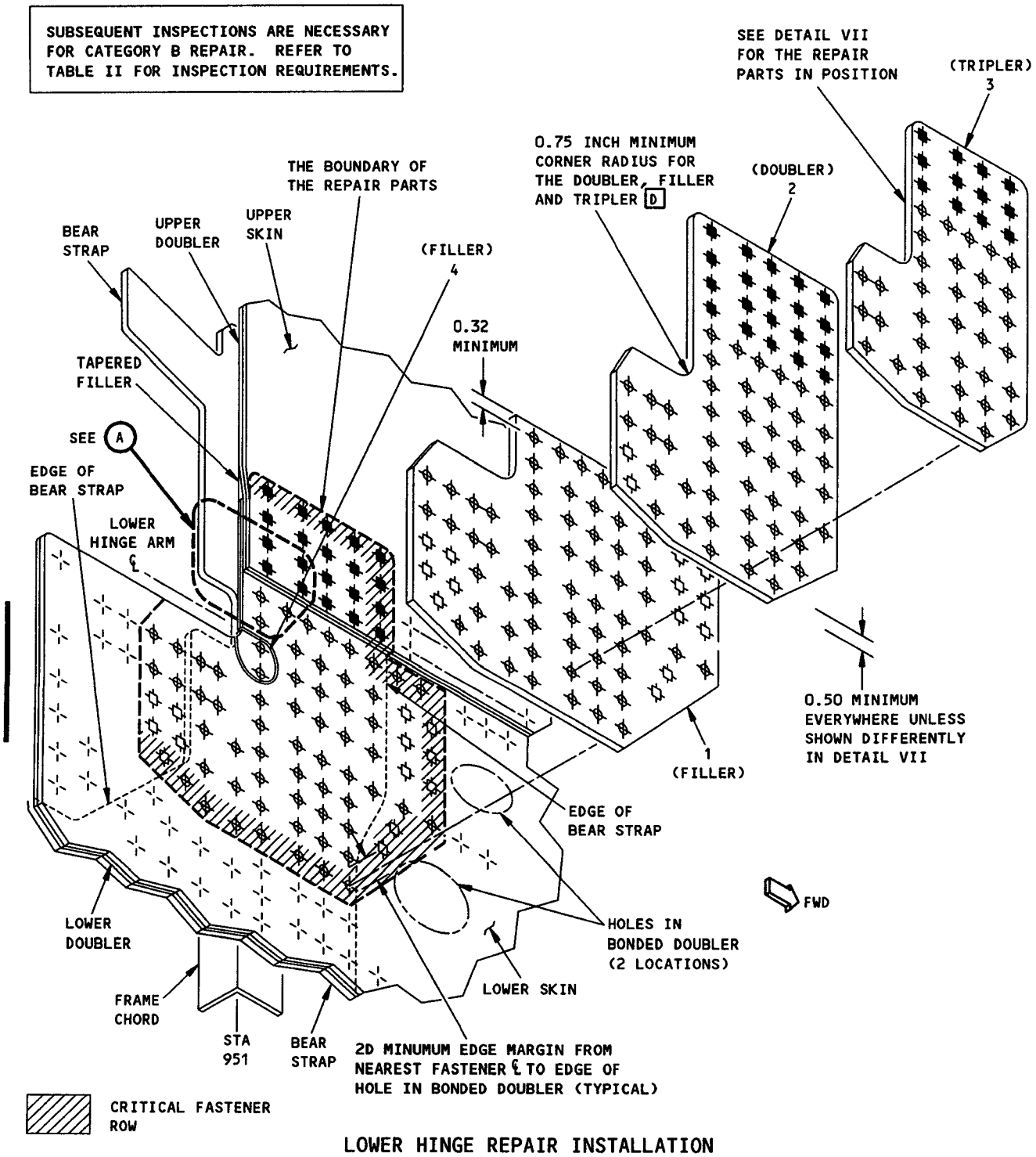

LOWER HINGE REPAIR INSTALLATION
DETAIL V

Skin, Doubler, and Bear Strap Repair at the Aft Galley and Entry Doors Lower Hinge
Figure 45 (Sheet 8)

BOEING PROPRIETARY - Copyright © - Unpublished Work - See title page for details.

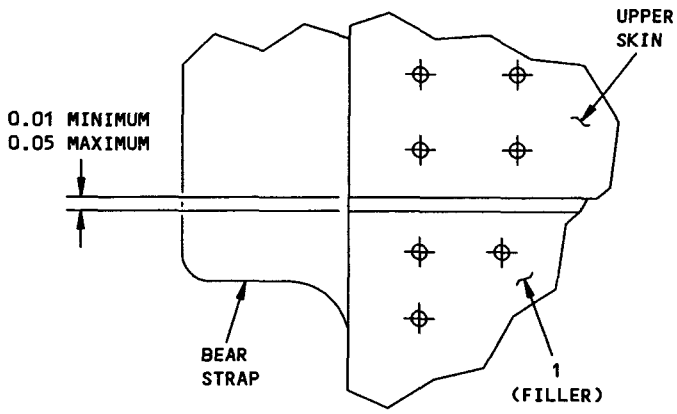

GAP AT THE LOWER EDGE OF THE LAP SPLICE

(A)

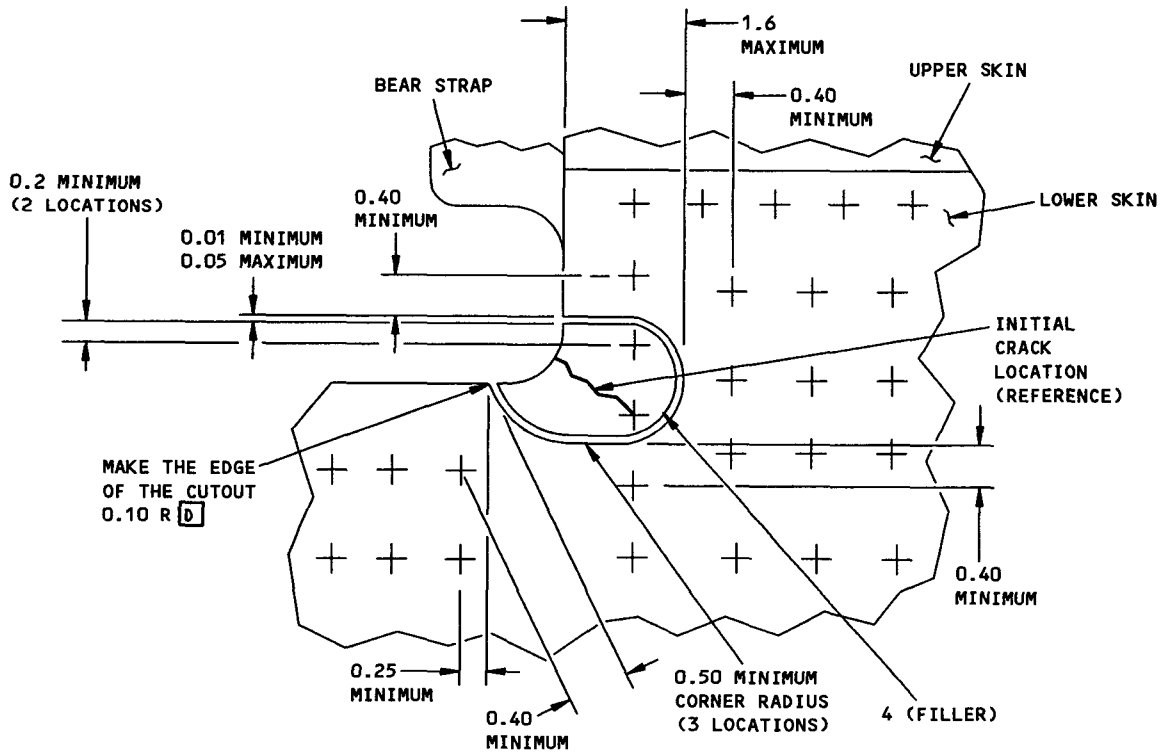

BEAR STRAP, SKIN AND DOUBLER CRACK CUTOUT B
DETAIL VI

Skin, Doubler, and Bear Strap Repair at the Aft Galley and Entry Doors Lower Hinge
Figure 45 (Sheet 9)

L11942

BOEING PROPRIETARY - Copyright © - Unpublished Work - See title page for details.

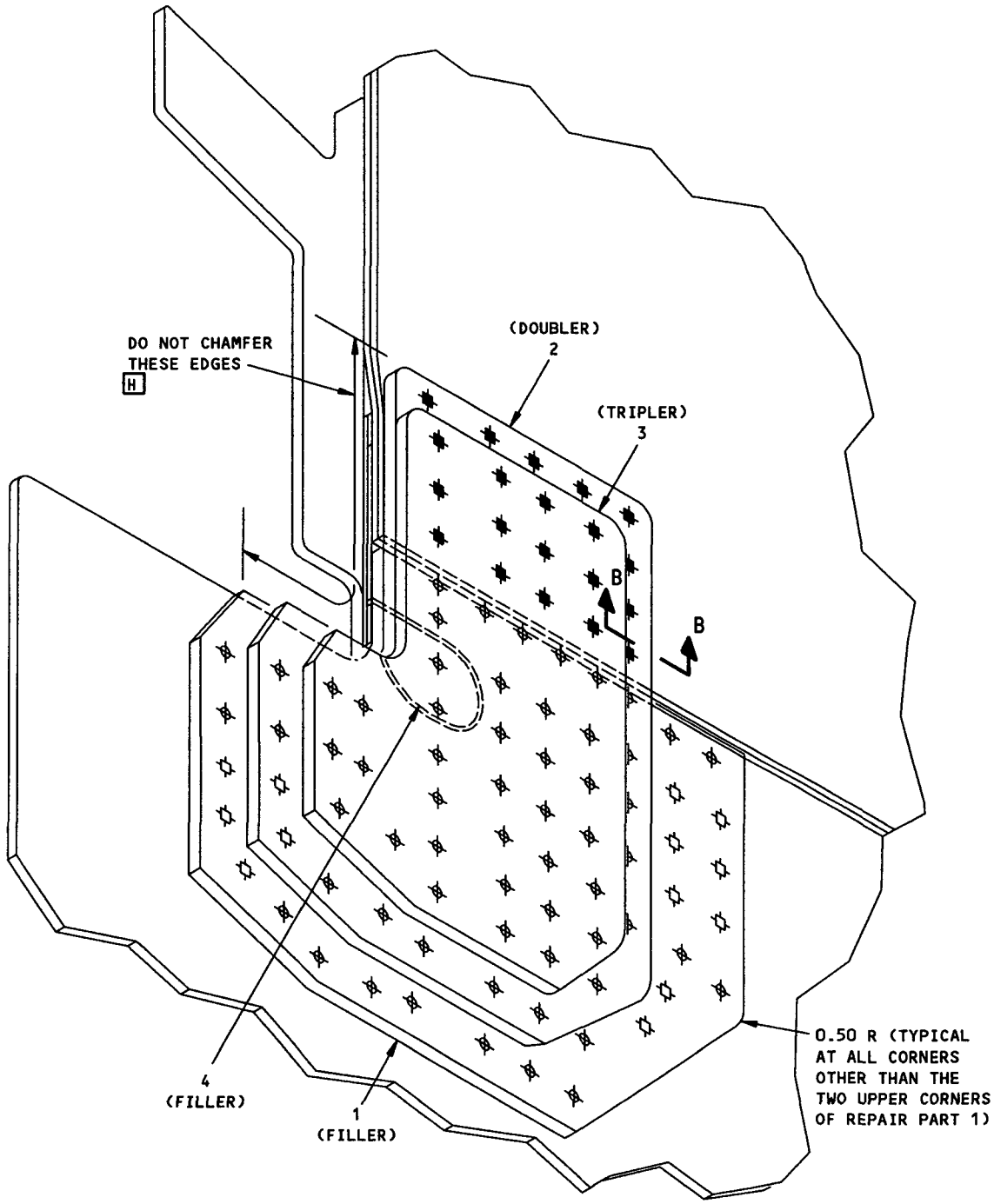

REPAIR PARTS 1, 2, AND 3
(SHOWN IN POSITION ON THE AIRPLANE)
DETAIL VII

FWD

Skin, Doubler, and Bear Strap Repair at the Aft Galley and Entry Doors Lower Hinge
Figure 45 (Sheet 10)

L11943

BOEING PROPRIETARY - Copyright © - Unpublished Work - See title page for details.

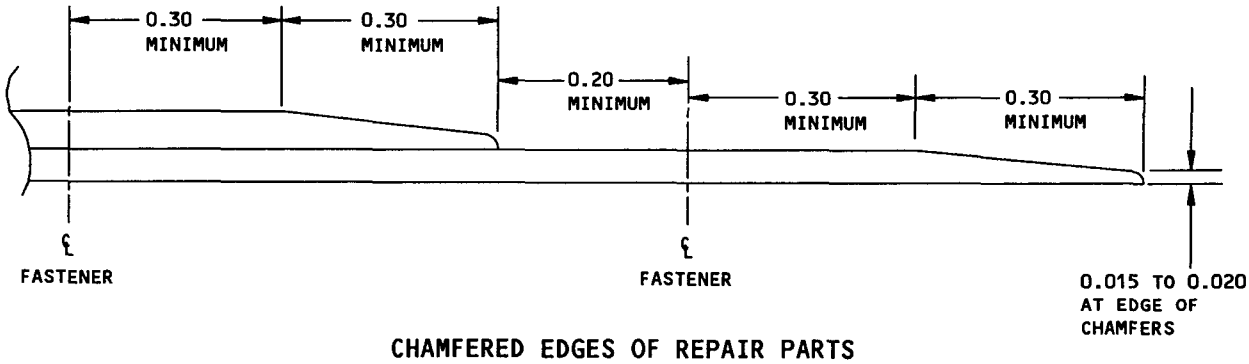

CHAMFERED EDGES OF REPAIR PARTS
(TYPICAL)

SECTION B-B

Skin, Doubler, and Bear Strap Repair at the Aft Galley and Entry Doors Lower Hinge
Figure 45 (Sheet 11)

L11945

BOEING PROPRIETARY - Copyright © - Unpublished Work - See title page for details.

CATEGORY B REPAIR AND SSI F-16A AND F-17A INSPECTION REQUIREMENTS			
INSPECTION THRESHOLD	REPEAT INSPECTION ALTERNATIVES		
	METHOD	INTERVAL	REFERENCES
[J]	DETAILED VISUAL	4,000 FLIGHT CYCLES	
	MEDIUM FREQUENCY EDDY CURRENT (MFEC)	15,000 FLIGHT CYCLES	737 NDT, PART 6, 53-30-00, FIG. 6
	DETAILED VISUAL		

NOTE:
1) AT EVERY 4,000 FLIGHT CYCLES:
- DO A DETAILED VISUAL INSPECTION OF THE UPPER AND LOWER SKINS EXTERNALLY AROUND THE PART 1 FILLER AND PART 2 DOUBLER AS SHOWN IN DETAIL VIII.

2) AT EVERY 15,000 FLIGHT CYCLES:
- DO AN MFEC INSPECTION OF THE BEARSTRAP INTERNALLY (OR EXTERNALLY) AT THE UPPER ROW AND INTERNALLY AT THE LOWER ROW OF THE REPAIR PART AS SHOWN IN DETAIL VIII.
- DO A DETAILED VISUAL INSPECTION OF THE FRAME WEB INTERNALLY AS SHOWN IN DETAIL VIII.

TABLE II

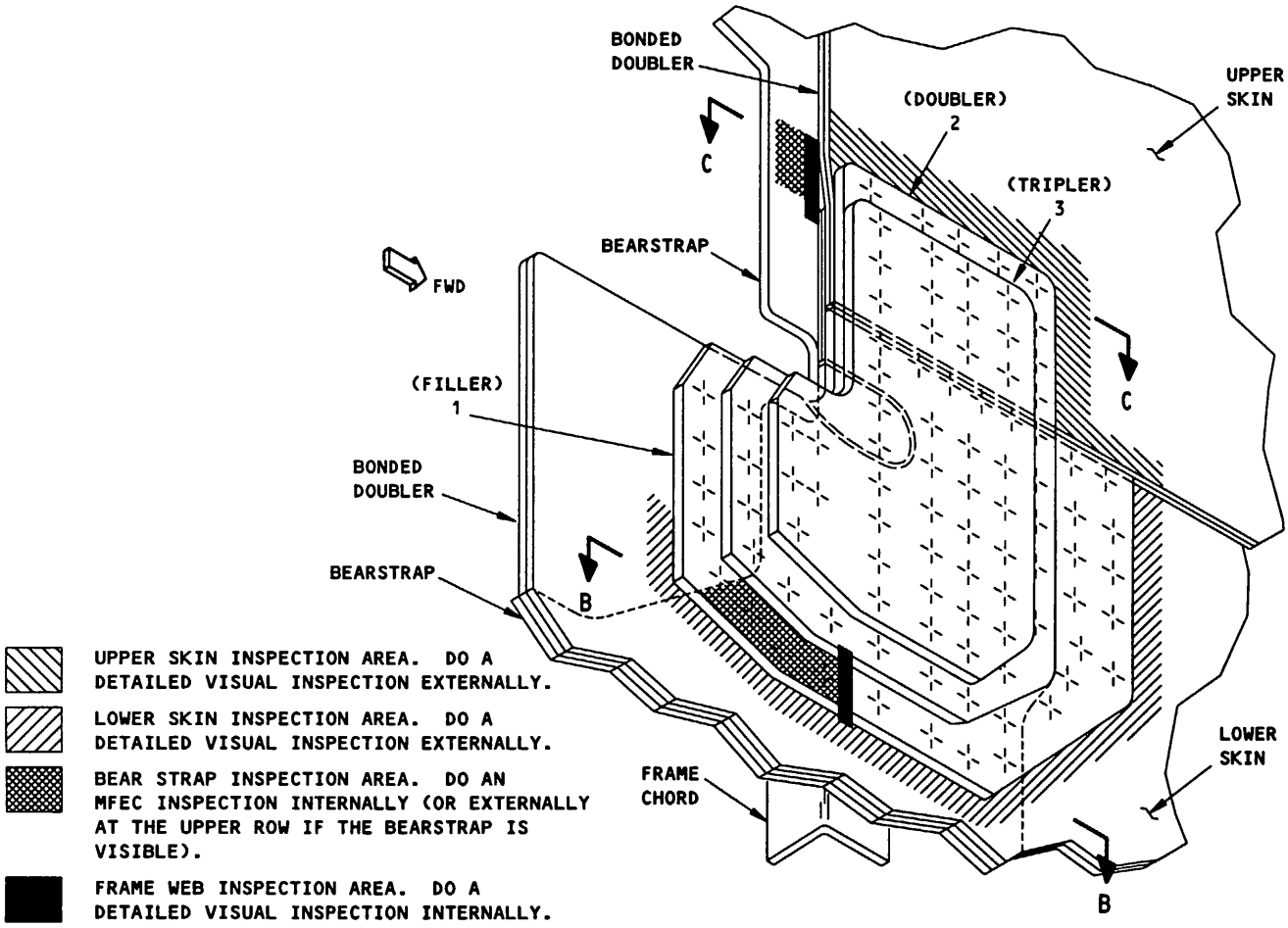

INSPECTION AREAS
DETAIL VIII

Skin, Doubler, and Bear Strap Repair at the Aft Galley and Entry Doors Lower Hinge
Figure 45 (Sheet 12)

BOEING PROPRIETARY - Copyright © - Unpublished Work - See title page for details.

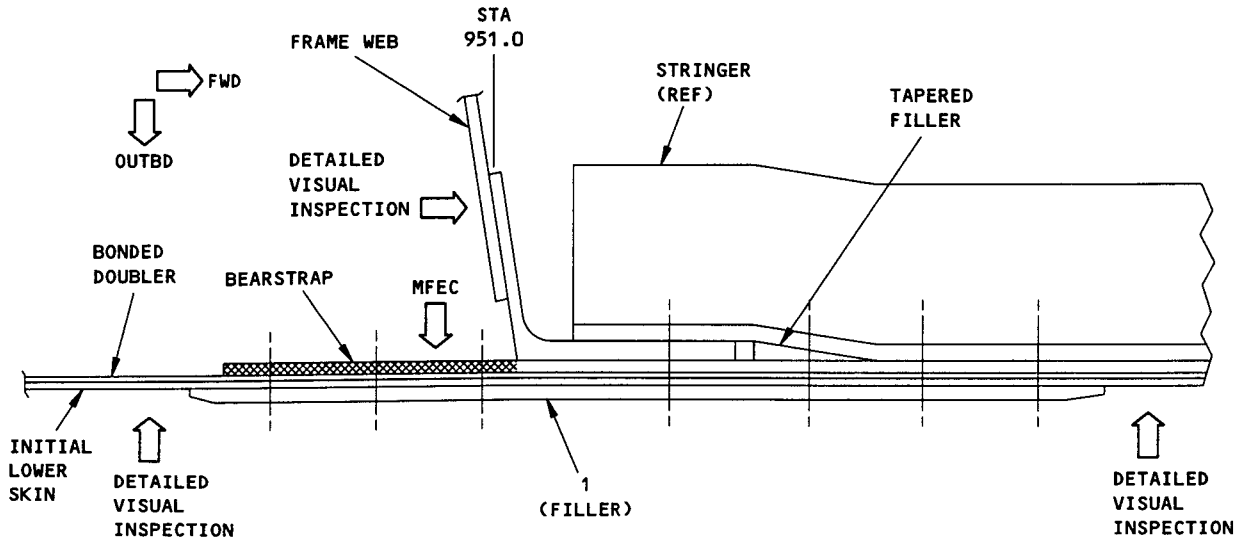

SECTION B-B

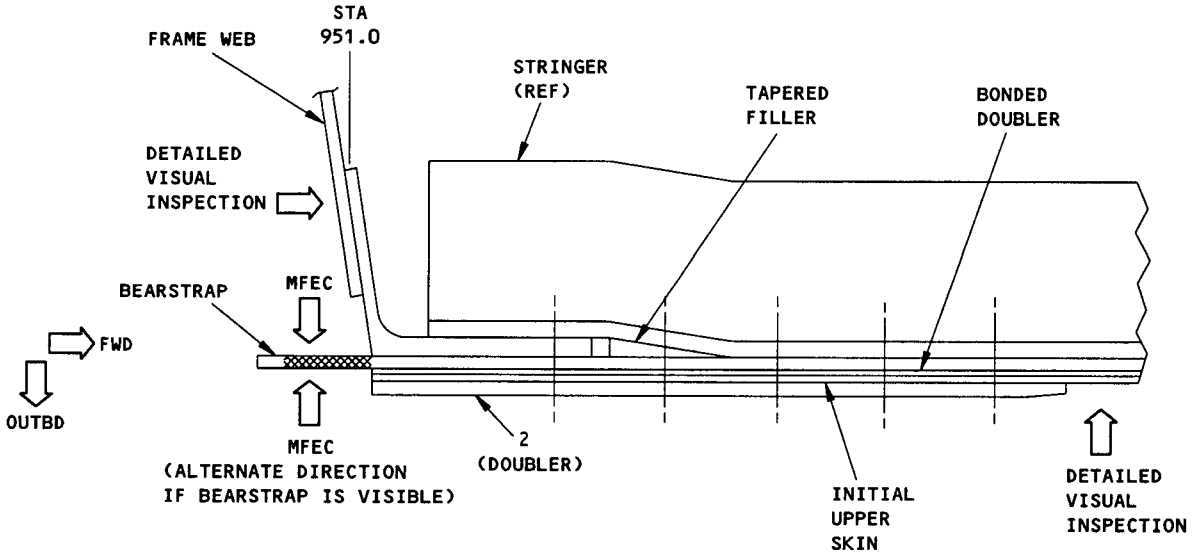

SECTION C-C

Skin, Doubler, and Bear Strap Repair at the Aft Galley and Entry Doors Lower Hinge
Figure 45 (Sheet 13)

BOEING PROPRIETARY - Copyright © - Unpublished Work - See title page for details.

SSI NUMBER F-16C AND F-17C INSPECTION REQUIREMENTS			
INSPECTION THRESHOLD	REPEAT INSPECTION		
	METHOD	INTERVAL	REFERENCE
66,000 FLIGHT CYCLES AFTER AIRPLANE DELIVERY [M]	HIGH FREQUENCY EDDY CURRENT (HFEC)	24,000 FLIGHT CYCLES	737 NDT, D6-37239, PART 6, 51-00-00, FIG. 4 OR 23
NOTE: INSPECT THE FRAME CHORD WITH HFEC METHOD INTERNALLY IN THE REPAIR AREA AS SHOWN IN DETAIL IX. IN ADDITION, INSPECT THE SKIN, BEARSTRAP, FRAMES AND SILLS PER THE EXISTING INTERNAL INSPECTIONS GIVEN IN THE 737 SSID DOCUMENT FOR F-16C AND F-17C.			

TABLE III

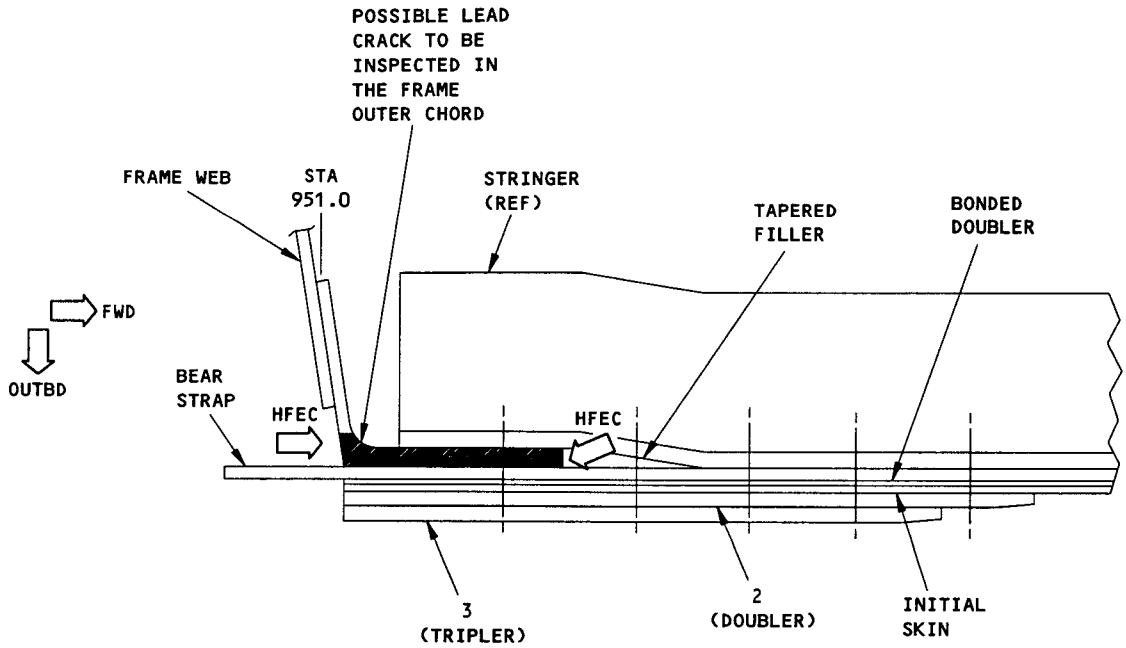

TYPICAL INSPECTION AREA FOR F-16C IS SHOWN,
FOR F-17C IS ALMOST THE SAME
DETAIL IX

Skin, Doubler, and Bear Strap Repair at the Aft Galley and Entry Doors Lower Hinge
Figure 45 (Sheet 14)

BOEING PROPRIETARY - Copyright © - Unpublished Work - See title page for details.

APPLICABILITY

THIS REPAIR IS APPLICABLE TO THE AFT GALLEY AND ENTRY DOOR CUTOUTS, AND THE FORWARD AND AFT CARGO DOOR CUTOUTS THAT HAVE DAMAGE AT THE:

- BEAR STRAP, OR
- SKIN AND BONDED DOUBLER, OR
- BONDED DOUBLER AND BEAR STRAP, OR
- BEAR STRAP, SKIN AND BONDED DOUBLER.

YOU CAN USE THIS REPAIR AS AN ALTERNATIVE TO THE FIG. 24, AND TO REPAIR LOCALIZED BLENDOUTS ON THE BEAR STRAP. [T][K]

DO NOT USE THIS REPAIR FOR DAMAGE AT THE DOOR HINGE CUTOUTS.

DO NOT USE THIS REPAIR FOR DAMAGE TO THE 737-100 FORWARD CARGO DOOR IN THE AREA OF THE STATIC PORT.

TELL BOEING:

- IF THE DAMAGE IS LARGER THAN THE PERMITTED CUTOUT. THE MAXIMUM PERMITTED DAMAGE IS SHOWN IN DETAIL I AND DETAIL VII.
- IF THERE IS DELAMINATION BETWEEN THE SKIN AND THE DOUBLER THAT CAN NOT BE CUTOUT AS SHOWN IN DETAIL I AND VII.

DO NOT USE THIS REPAIR IF:

- THE MAXIMUM SIZE OF A SINGLE, CONTINUOUS REPAIR WILL BE MORE THAN 1600 SQUARE INCHES. CONTACT THE BOEING COMPANY FOR AN AERODYNAMIC ANALYSIS.
- THE SUM OF THE REPAIRS DONE WITH THIS FIGURE, FIGURE 48 AND FIGURE 49 ON THE SAME AIRPLANE IS MORE THAN 32,400 SQUARE INCHES. CONTACT THE BOEING COMPANY.

IF THE SUM OF ALL REPAIRS DONE WITH THIS FIGURE, FIGURE 48 AND FIGURE 49 ON THE SAME AIRPLANE IS MORE THAN 8100 SQUARE INCHES THEN A PERFORMANCE ADJUSTMENT MUST BE APPLIED. [AH]

REPAIR INSTRUCTIONS

1. Get access to the damaged area.
2. Do a visual inspection of the damaged area. If the damaged area is within the limits of Detail I, continue with Step 3. If the damaged area is not within the limits of Detail I, contact The Boeing Company.
3. If there is a modified skin lap joint as given in Service Bulletin 737-53A1039 Part II, par. B.3 instruction in the damaged area, go to Procedure I.
4. If there is any other repair in the damaged area, go to Procedure II.
5. For all other configurations go to Procedure III.

Procedure I:

1. Remove the skin lap joint fasteners that are in the repair area.
2. Do not separate the skin lap joint.
3. Oversize the fastener hole to the size as given in Table III. Continue to Procedure IV.

Procedure II:

1. Remove the initial repair parts that are in the repair area.
2. Record the initial repair fastener spacing and hole sizes.
3. If the fastener data is within the limits given in Table II, then combine both repairs into one repair as given in this figure, then go to Procedure III.
4. If the fastener data is not within the limits given in Table II, then contact The Boeing Company with both the new and initial damage and fastener data.

Procedure III:

1. If this repair is made to airplanes with cum line numbers 1 to 291, and if this repair extends over any row of fasteners at a skin lap joint, do the steps that follow:
   A. Do a close visual inspection for signs of corrosion or disbonding in the area of the repair. Look for bulges between fasteners, missing or dished fastener heads or white powder when the fasteners are drilled out.
   B. If corrosion or disbonding is found that can be repaired within the limits of this repair, then cut out the damage and do the repair.
   C. If corrosion or disbonding is found that can not be repaired within the limits of this repair, then contact Boeing for repair instruction.
   D. Do a High Frequency Eddy Current (HFEC) countersink and hole probe inspection of all the fastener holes of the lap joint where fasteners have been removed in the area of the repair for cracks. Refer to 737 NDT Part 6, 53-30-00, Fig. 4 and 737 NDT Part 6, 51-00-00 Fig. 16.
      - If there is no crack, oversize the fastener hole as given in Table III.
      - If there is a crack in the fastener hole, cut and remove the damaged part of the lap joint. Combine both repairs into one repair as given in this figure. Then go to Procedure IV.
2. If this repair is made to airplanes with cum line numbers 292 to 2565, and if this repair extends over any row of fasteners at a skin lap joint, do the steps that follow:
   A. Do a HFEC inspection in the lower row of the lap joint fasteners that are in the area of the repair for cracks. Refer to 737 NDT Part 6, 51-00-00, Fig. 16.
   B. If there is no crack, oversize the lower row fastener hole as given in Table III.

Skin, Doubler, and Bear Strap Repair at Door Cutouts
Figure 46 (Sheet 1)

BOEING PROPRIETARY - Copyright © - Unpublished Work - See title page for details.

C. If there is a crack in a fastener hole cut and remove the damaged part of the lap joint. Combine both repairs into one repair as given in this figure. Then go to Procedure IV.

Procedure IV:

WARNING: WEAR PROTECTIVE CLOTHING AND EYE PROTECTION WHEN YOU USE SOLID CARBON DIOXIDE (DRY ICE). MAKE SURE YOU HAVE SUFFICIENT VENTILATION AND DO NOT USE DRY ICE IN AN ENCLOSED SPACE. DRY ICE CAN INJURE YOUR SKIN OR CAUSE BREATHING PROBLEMS.

CAUTION: USE SPECIAL CARE TO CUT AND REMOVE THE DAMAGED PART OF THE BEAR STRAP AND/OR SKIN AND DOUBLER. DO NOT GOUGE, SCRATCH, OR BUCKLE THE STRUCTURE ADJACENT TO THE CUTOUT. IF YOU DAMAGE THE ADJACENT STRUCTURE MORE REPAIR WORK WILL BE NECESSARY.

1. Cold soak the area with solid carbon dioxide (dry ice) for approximately 30 minutes as necessary, before you use the wedges.
2. Carefully install nylon or hardwood wedges between the bear strap, skin and doubler, frame structure, or other structure as necessary in the repair area. Use sufficient wedges to gradually separate the parts and prevent buckling.
3. Use a thin steel sheet between the bear strap and skin and doubler, or frame structure, or other adjacent structure as required to prevent damage to the adjacent structure.
4. Carefully cut and remove the damaged part of the bear strap and/or skin and doubler. Refer to Detail VII.
5. Remove the steel sheet
6. Do a (HFEC) inspection along the edge of the cutout. Make sure there are no cracks, corrosion and disbond between the bear strap, skin and doubler. If there is no more damage, make the cutout larger by 0.04 inch. Refer to NDT Part 6, 51-00-00 Fig. 4 for the HFEC procedure.
7. Remove the wedges.
8. Do a (HFEC) inspection of all the production holes that are removed in the repair area. Refer to NDT Part 6, 51-00-00 Fig. 16 and 53-30-00 Fig. 4.
9. Make the repair parts as given in the applicable details and Tables IV through VI. If applicable, make sure the Part 1 (Repair Plate) extends a minimum of 3 rows above and below the skin lap joint (Refer to Detail X).
10. Preform the repair parts to match the fuselage skin contour. Refer to SRM 51-20-1 for Sheet Metal Materials and SRM 51-70 Fig. 8 for repair part surface smoothness.
11. Assemble the repair parts. See the applicable details.
12. Drill the Threshold/Scuff Plate attachment holes through the repair parts only. Do not damage the initial parts.
13. Drill fastener holes. Refer to Table I, II, III, and IV. [E] [O]
14. Remove the repair parts.
15. If necessary install the wedges again and put the steel sheet back in position.
16. Remove all nicks, scratches, gouges, burrs, and sharp edges from the repair parts, bear strap and skin/doubler. The edges of the repair parts that are common to the cutout must have a finish smoothness of 63 microinches Ra or better. All other machined surfaces must have a finish of 125 microinches Ra or better.
17. Remove the steel sheet and wedges.
18. Apply a chemical conversion coating to the repair parts and the bare surfaces of the initial parts. Refer to SRM 51-10-2.
19. Apply one layer of BMS 10-11, Type I primer to the repair parts and the bare surfaces of the initial parts. Refer to SOPM 20-44-04.
20. Install repair washers in the countersink holes in the skin panels between repair or filler plates and the skin. Install them with BMS 5-95 sealant. Refer to SRM 51-30-8.
21. Clean initial and repair parts mating surfaces to be sealed. Refer to SRM 51-20-4. Assemble the repair parts with BMS 5-95 sealant on all of the mating surfaces and in all the gaps. The maximum permitted gap between the mating surfaces is 0.010 inch before you install the fasteners. If the gap is more than 0.010 inch, install shims as necessary. Refer to SRM 51-20-1. If the gap more than 0.060 inch contact The Boeing Company.
22. Install the fasteners within the squeeze-out life of the sealant. Refer to SRM 51-20-4. Fasteners that are not made of aluminum must be installed wet with BMS 5-95 sealant in transition fit holes. Torque the hex drive bolts to 25 to 35 inch-pounds.
23. Retorque the hex drive bolts in less than the squeeze-out time for the sealant as given in the BMS 5-95 specification. Refer to SRM 51-30-4.
24. Apply a fillet seal along the edges of the repair parts.
25. Apply a layer of BMS 3-23 Type 2 corrosion inhibiting compound onto the internal surface of the entire repair area. Refer to SRM 51-10-02.
26. Apply a finish to the external surface of the repair area. Refer to AMM 51-21.

Skin, Doubler, and Bear Strap Repair at Door Cutouts
Figure 46 (Sheet 2)

BOEING PROPRIETARY - Copyright © - Unpublished Work - See title page for details.

27. If the threshold/scuff plates were removed to install the repair parts, repair the threshold/scuff plates as necessary and install as follows:

    NOTE: Scuff plate is not a structural part. You can do your own repair procedure to repair or do correct installation of scuff plate Incorrect installation of scuff plate could cause a pressure leak around the door edges.

    A. Cut the crest of the threshold/scuff plates as necessary to fit over the repair parts. See Detail VIII for typical repair details.

    B. Weld the threshold/scuff plates. Refer to BAC5975.

    C Sand the edges and outer surfaces, in a constant direction, with 120-grit abrasive.

    D. Apply one layer of BMS 10-11, Type I primer to the inner surfaces of the threshold.

    E. Apply a coat of strippable parting agent to all faying surfaces of the threshold/scuff plates and fuselage skin/repair parts.

    F Apply BMS 3-23 Type 2 corrosion inhibiting compound to the surfaces under threshold where no parting agent was applied.

    G. Pack BMS 5-95 sealant into the threshold/scuff plates before installing.

    H. Install the threshold/scuff plates with the same type fasteners as the initial fasteners. Make sure the fasteners have the correct grip length. Make sure that the sealant that squeezes out along the bottom of the threshold/scuff plates is continuous and without gaps. Remove the excess sealant.

    NOTE. There can be excessive cabin noise and air leaks if there are sealant gaps along the bottom of the threshold/scuff plates.

    I Make a ramp of fairing compound in the upper corners of the scuff plates to the doorway frame to give a smooth transition for the door seal. Refer to SRM 51-40-1 Fig. 1 for suggested fairing compounds. Protect the threshold with tape and sand the seal ramp smooth. Refer to Detail IX.

NOTES

- THE REPAIRS AS GIVEN IN DETAIL II THROUGH DETAIL X ARE CATEGORY B REPAIRS. THE CATEGORY B REPAIR HAS FAA APPROVAL IF YOU DO THE SUPPLEMENTAL INSPECTIONS GIVEN IN TABLES VII THROUGH XII. INCORPORATION OF THESE INSPECTION REQUIREMENTS INTO THE AIRPLANE'S MAINTENANCE PROGRAM SATISFIES THE DAMAGE TOLERANCE ASSESSMENT OF THE REPAIR SPECIFIED BY THE REPAIR ASSESSMENT PROGRAM. THIS ASSESSMENT CAN BE DONE AFTER YOU RELEASE THE AIRPLANE TO SERVICE. REFER TO SRM 51-00-6 FOR GENERAL DATA ABOUT THE REPAIR ASSESSMENT PROGRAM. SEE DETAIL XI THROUGH XXIII FOR INSPECTION AREAS AS APPLICABLE
- REPAIRS MADE AS GIVEN IN THIS FIGURE ARE ALTERNATE MEANS OF COMPLIANCE TO·
  - SB 737-53-53-1076 AND FAA AD 92-25-09, AMENDMENT 39-8424 AND AMENDMENT 39-6978 IN THE AREAS COVERED BY THIS REPAIR.
  - SB 737-53A1039 AND FAA AD 88-22-11 R1, AMENDMENT 39-6432 AND AD 89-09-03, AMENDMENT 39-6184; AND
  - SB 737-53A1177 AND FAA AD 97-22-07, AMENDMENT 39-10179 (WHICH SUPERSEDES AD 94-25-05) IN THE AREAS OF SKIN LAP JOINT COVERED BY THIS REPAIR.
- ALL DIMENSIONS ARE IN INCHES, UNLESS SHOWN DIFFERENTLY.
- D = FASTENER DIAMETER.
- USE A MINIMUM OF 2D EDGE MARGIN, UNLESS SHOWN DIFFERENTLY.
- KEEP A MINIMUM OF 0 5 INCH EXTERNAL RADIUS AND 2.0 INCHES INTERNAL RADIUS ON REPAIR PART CORNERS.
- CHAMFER ALL EDGES OF REPAIR PARTS NOT COMMON TO THE DOOR CUTOUT.

Skin, Doubler, and Bear Strap Repair at Door Cutouts
Figure 46 (Sheet 3)

BOEING PROPRIETARY - Copyright © - Unpublished Work - See title page for details.

WHEN YOU USE THIS REPAIR REFER TO:

- AMM 34-11-21 FOR STATIC PRESSURE PORT-REMOVAL/INSTALLATION
- AMM 51-21 FOR INTERIOR AND EXTERIOR FINISHES
- AMM 51-31 FOR SEALS AND SEALING
- NDT PART 6, 51-00-00, FIG. 16, FOR HFEC ALUMINUM PART FASTENER HOLE INSPECTION
- NDT PART 6, 53-30-00, FIG. 4, FOR HFEC COUNTERSINK INSPECTION OF ALUMINUM PARTS
- SOPM 20-44-04 FOR APPLICATION OF URETHANE COMPATIBLE PRIMER
- SRM 51-00-4 FOR A LIST OF STRUCTURALLY SIGNIFICANT ITEMS (SSID DETAILS)
- SRM 51-00-06 FOR REPAIR CATEGORIES AND DEFINITIONS
- SRM 51-10-1 FOR INVESTIGATION AND CLEAN UP OF DAMAGE
- SRM 51-10-2 FOR PROTECTIVE TREATMENT OF METAL
- SRM 51-10-6 FOR CORROSION REMOVAL AND SURFACE FINISHING REQUIREMENTS
- SRM 51-20-1 FOR SHEET METAL MATERIALS
- SRM 51-20-4 FOR REPAIR SEALING
- SRM 51-30 FOR FASTENER CODE REMOVAL AND INSTALLATION, HOLE SIZES AND EDGE MARGINS
- SRM 51-30-8 FOR COUNTERSINKING OF HOLES AND USE OF COUNTERSINK REPAIR WASHERS
- SRM 51-40-01 FOR REPAIR FOR MINOR DENTS
- SRM 51-70 FOR AERODYNAMIC SMOOTHNESS REQUIREMENTS.

[A] THE THICKNESS OF THE PART 4 [FILLER] MUST BE EQUAL TO THE TOTAL THICKNESS OF THE CUTOUT (BEAR STRAP AND/OR SKIN/DOUBLER).

[B] THIS DETAIL SHOWS THE MAXIMUM PERMITTED CUTOUT. IF THE DAMAGE CANNOT BE REMOVED WITH THIS CUTOUT, TELL THE BOEING COMPANY.

[C] THE THICKNESS OF THE PART 5 [FILLER] MUST BE EQUAL TO THE THICKNESS OF THE UPPER SKIN AND THE BONDED DOUBLER.

[D] MAKE THE EDGES THAT ARE COMMON TO THE DOOR CUTOUT EDGE HAVE A FINISH OF 63 MICROINCHES Ra OR SMOOTHER.

[E] WHEN YOU DRILL NEW FASTENER HOLES USE CARE NOT TO DRILL NEAR THE EDGE OF THE BEAR STRAP.

[F] REFER TO DETAIL VI AND SRM 51-70 FIGURE 8 FOR REPAIR REQUIREMENTS AT THE FORWARD CARGO DOOR CUTOUT IN THE AREA OF A STATIC PRESSURE PORT. ALSO, REFER TO AMM 34-11-21 FOR STATIC PRESSURE PORT REMOVAL/INSTALLATION PROCEDURE.

[G] REPAIR PLATES CAN EXTEND FARTHER THAN THE DIMENSIONS ARE SHOWN, BUT NOT LESS THAN THESE DIMENSIONS.

[H] DO NOT END ANY REPAIR PLATES OR PART 5 [FILLER] INSIDE OF ZONE C. A REPAIR THAT GOES INTO THIS ZONE MUST BE COMBINED WITH A ZONE C REPAIR. SEE DETAILS IV, V AND VI.

[I] IF POSSIBLE, EXTEND THE PART 1 [REPAIR PLATE] OR PART 5 [FILLER] ONE MORE ROW PAST THE INITIAL FASTENER ROWS OF THE INTERNAL STRUCTURES. IF THE REPAIR PART ENDS ON INTERNAL STRUCTURE, IT WILL PREVENT INTERNAL INSPECTION OF THE CRITICAL FASTENER ROW.

NOTE: INTERNAL STRUCTURE INCLUDES STRINGER, FRAME, INTERCOSTALS, REINFORCING STRAPS OR OTHER STRUCTURE THAT IS FASTENED TO THE SKIN.

[J] DO NOT END THE REPAIR PARTS ON THE LOWER ROW OF THE LAP JOINT. IF THE REPAIR PART ENDS ON INTERNAL STRUCTURE, IT WILL PREVENT INTERNAL INSPECTION OF THE CRITICAL FASTENER ROW.

[K] IF YOU SEE DAMAGE ON THE BEAR STRAP, REMOVE THE DAMAGE. IF THE BLENDOUT DEPTH IS MORE THAN HALF THE THICKNESS OF THE BEAR STRAP, THEN CUT AND REMOVE THE DAMAGED AREA. IF THE BLENDOUT DEPTH IS LESS THAN THE HALF THE THICKNESS OF THE BEAR STRAP DO NOT CUT THE DAMAGED AREA IN THE BEAR STRAP. YOU CAN USE THIS REPAIR FOR A BLENDOUT OR A CUTOUT OF THE BEAR STRAP. REFER TO SRM 51-10-6 FOR DAMAGE REMOVAL.

[L] REFER TO TABLE I, II AND III FOR INITIAL FASTENER REPLACEMENT.

[M] USE THE 1/64 OVERSIZE FASTENER. YOU CAN USE A 1/32 OVERSIZE UP TO A MAXIMUM 0.250 INCH DIAMETER IF MINIMUM 4D SPACING IS KEPT.

[N] PROTRUDING HEAD FASTENERS ARE NOT APPROVED IN DETAIL VI OF THIS FIGURE.

Skin, Doubler, and Bear Strap Repair at Door Cutouts
Figure 46 (Sheet 4)

BOEING PROPRIETARY - Copyright © - Unpublished Work - See title page for details.

O THE EDGE MARGIN BETWEEN THE EDGE OF THE PART 4 FILLER AND THE NEAREST FASTENER MUST BE 1.5D MINIMUM.

P STEP THE REPAIR PLATES AS FOLLOWS:

- EXTEND THE EDGE OF PART 2 A MINIMUM OF ONE FASTENER ROW BEYOND THE EDGE OF PART 3.
- EXTEND THE EDGE OF PART 1 A MINIMUM OF ONE FASTENER ROW BEYOND THE EDGE OF PART 2. IF PART 1 AND 3 ARE USED WITHOUT PART 2, THEN EXTEND PART 1 ONE ROW BEYOND PART 3.
- EXTEND THE EDGE OF PART 5 A MINIMUM OF ONE FASTENER ROW BEYOND THE EDGE OF PART 1. IF PART 1 IS NOT USED, EXTEND EDGE OF PART 5 A MINIMUM OF ONE ROW BEYOND THE EDGE OF PART 2.
- HOWEVER, PART 1, 2, AND 3 REPAIR PLATES AND PART 5 FILLER MUST END AT THE SAME FASTENER ROW AT THE EDGE OF THE DOOR CUTOUT.

Q MAKE SURE THE DEPTH OF THE COUNTERSINK WILL NOT BE MORE THAN 80 PERCENT OF THE REPAIR PART THICKNESS, WHEN YOU USE THE COUNTERSINK FASTENERS. USE OPTIONAL PROTRUDING HEAD FASTENERS AS GIVEN IN TABLE I TO PREVENT COUNTERSINK DEPTHS LARGER THAN 80 PERCENT OF THE SHEET THICKNESS.

R DO NOT USE THIS REPAIR IF IT ENDS WITHIN THREE ROWS OF A HINGE CUTOUT.

S IF POSSIBLE, EXTEND THE PART 1 REPAIR PLATE OR PART 5 FILLER AN ADDITIONAL ROW PAST THE INITIAL FASTENER ROW OF THE BEAR STRAP. IF THE REPAIR PART ENDS ON THE END OF A BEAR STRAP, IT WILL PREVENT INTERNAL INSPECTION OF THE CRITICAL FASTENER ROW OF THE FUSELAGE SKIN/DOUBLER.

T IT IS PERMITTED TO LIGHTLY SPOTFACE THE BLENDOUT ON THE BEAR STRAP TO LET THE HEX DRIVE BOLT COLLARS TO SEAT LEVEL. USE A SPOTFACE TOOL WITH A 0.13 INCH OR LARGER CUTTER RADIUS AT THE BOTTOM EDGE OF THE SPOTFACE. DO NOT SPOTFACE DEEPER THAN THE BLENDOUT AREA.

U YOU CAN USE A SMALLER OPTIONAL REPAIR AT THE FORWARD CARGO DOOR CUTOUT IN THE AREA OF THE STATIC PORT IF:

- DAMAGE IS LIMITED TO THE SKIN AND THE BONDED DOUBLER, AND
- THE DAMAGE IS AFT OF THE FUSELAGE FRAME. CONTACT THE BOEING COMPANY FOR REPAIR INSTRUCTIONS.

V THIS REPAIR (DETAIL II) WILL HAVE AN EFFECT ON THE STRUCTURALLY SIGNIFICANT ITEM (SSI):

- NUMBER F-10 WHEN INSTALLED AT THE FORWARD CARGO DOOR CUTOUT, BUT THE SUPPLEMENTAL INSPECTIONS GIVEN IN TABLE VII WILL MEET THE SSID INSPECTION REQUIREMENTS FOR F-10A AND C IN THE REPAIR AREA. HOWEVER, THE INSPECTIONS FOR F-10B ARE STILL APPLICABLE.
- NUMBER F-11 WHEN INSTALLED AT THE AFT CARGO DOOR CUTOUT, BUT THE SUPPLEMENTAL INSPECTIONS GIVEN IN TABLE VII WILL MEET THE SSID INSPECTION REQUIREMENTS FOR F-11A AND C IN THE REPAIR AREA. HOWEVER, THE INSPECTIONS FOR F-11B ARE STILL APPLICABLE.
- NUMBER F-16 WHEN INSTALLED AT THE AFT GALLEY DOOR CUTOUT, BUT THE SUPPLEMENTAL INSPECTIONS GIVEN IN TABLE VII WILL MEET THE SSID INSPECTION REQUIREMENTS FOR F-16A AND D IN THE REPAIR AREA. HOWEVER, THE INTERNAL INSPECTION ALTERNATIVES FOR F-16B, C AND E ARE STILL APPLICABLE. ALSO, A NEW INSPECTION METHOD IS NECESSARY FOR THE EXTERNAL INSPECTIONS OF F-16C. SEE TABLE XIII FOR NEW REQUIREMENTS FOR F-16C.
- NUMBER F-17 OR F-18 WHEN INSTALLED AT THE AFT ENTRY DOOR CUTOUT, BUT THE SUPPLEMENTAL INSPECTIONS GIVEN IN TABLE VII WILL MEET THE SSID INSPECTION REQUIREMENTS FOR F-17A AND D OR F-18A IN THE REPAIR AREA. HOWEVER, THE INTERNAL INSPECTION ALTERNATIVES FOR F-17B, C AND E OR F-18B ARE STILL APPLICABLE. ALSO, A NEW INSPECTION METHOD IS NECESSARY FOR THE EXTERNAL INSPECTIONS OF F-17C. SEE TABLE XIII FOR NEW REQUIREMENTS FOR F-17C IN THE REPAIR AREA.

DO THE INTERNAL INSPECTIONS FOR F-10B, F-11B, F-16B, C AND E, F-17B, C AND E, OR F-18B, IF NECESSARY, AT THE SUBSEQUENT SUPPLEMENTAL STRUCTURAL INSPECTION DOCUMENT (SSID) INSPECTION ON THIS AIRPLANE. REFER TO SRM 51-00-4, FIGURE 3, FOR THE APPLICABLE SSI DATA.

Skin, Doubler and Bear Strap Repair at Door Cutouts
Figure 46 (Sheet 5)

BOEING PROPRIETARY - Copyright © - Unpublished Work - See title page for details.

W THIS REPAIR (DETAIL X) WILL HAVE AN EFFECT ON THE STRUCTURALLY SIGNIFICANT ITEM (SSI):

- NUMBER F-10 WHEN INSTALLED AT THE FORWARD CARGO DOOR CUTOUT, BUT THE SUPPLEMENTAL INSPECTIONS GIVEN IN TABLE XII WILL MEET THE SSID INSPECTION REQUIREMENTS FOR F-10A AND C IN THE REPAIR AREA. HOWEVER, THE INSPECTIONS FOR F-10B ARE STILL APPLICABLE.
- NUMBER F-11 WHEN INSTALLED AT THE AFT CARGO DOOR CUTOUT, BUT THE SUPPLEMENTAL INSPECTIONS GIVEN IN TABLE XII WILL MEET THE SSID INSPECTION REQUIREMENTS FOR F-11A AND C IN THE REPAIR AREA. HOWEVER, THE INSPECTIONS FOR F-11B ARE STILL APPLICABLE.
- NUMBER F-16 WHEN INSTALLED AT THE AFT GALLEY DOOR CUTOUT, BUT THE SUPPLEMENTAL INSPECTIONS GIVEN IN TABLE XII WILL MEET THE SSID INSPECTION REQUIREMENTS FOR F-16A AND D IN THE REPAIR AREA. HOWEVER, THE INTERNAL INSPECTION ALTERNATIVES FOR F-16B, C AND E ARE STILL APPLICABLE. ALSO, A NEW INSPECTION METHOD IS NECESSARY FOR THE EXTERNAL INSPECTIONS OF F-16C. SEE TABLE XIII FOR NEW REQUIREMENTS FOR F-16C.
- NUMBER F-17 OR F-18 WHEN INSTALLED AT THE AFT ENTRY DOOR CUTOUT, BUT THE SUPPLEMENTAL INSPECTIONS GIVEN IN TABLE XII WILL MEET THE SSID INSPECTION REQUIREMENTS FOR F-17A AND D OR F-18A IN THE REPAIR AREA. HOWEVER, THE INTERNAL INSPECTION ALTERNATIVES FOR F-17B, C AND E OR F-18B ARE STILL APPLICABLE. ALSO, A NEW INSPECTION METHOD IS NECESSARY FOR THE EXTERNAL INSPECTIONS OF F-17C. SEE TABLE XIII FOR NEW REQUIREMENTS FOR F-17C IN THE REPAIR AREA.
- NUMBER 48 WHEN INSTALLED AT THE FORWARD OR AFT CARGO, AFT GALLEY, OR AFT ENTRY DOOR CUTOUTS, BUT THE SUPPLEMENTAL INSPECTIONS GIVEN IN TABLE XII FOR THE NEW CRITICAL DETAIL WILL MEET THE SSID INSPECTION REQUIREMENTS OF F-48 IN THE REPAIR AREA.

DO THE INTERNAL INSPECTIONS FOR F-10B, F-11B, F-16B, C AND E, F-17B, C AND E, OR F-18B, IF NECESSARY, AT THE SUBSEQUENT SUPPLEMENTAL STRUCTURAL INSPECTION DOCUMENT (SSID) INSPECTION ON THIS AIRPLANE. REFER TO SRM 51-00-4, FIGURE 3, FOR THE APPLICABLE SSI DATA.

X THIS REPAIR (DETAIL III) WILL HAVE AN EFFECT ON THE STRUCTURALLY SIGNIFICANT ITEM (SSI):

- NUMBER F-10B WHEN INSTALLED AT THE FORWARD CARGO DOOR CUTOUT, BUT THE INSPECTIONS FOR F-10B ARE STILL APPLICABLE.
- NUMBER F-11B WHEN INSTALLED AT THE AFT CARGO DOOR CUTOUT, BUT THE INSPECTIONS FOR F-11B ARE STILL APPLICABLE.
- NUMBER F-16 WHEN INSTALLED AT THE AFT GALLEY DOOR CUTOUT, BUT THE INTERNAL INSPECTION ALTERNATIVES FOR F-16B AND C ARE STILL APPLICABLE.
- NUMBER F-17 OR F-18 WHEN INSTALLED AT THE AFT ENTRY DOOR CUTOUT, BUT THE INTERNAL INSPECTION ALTERNATIVES FOR F-17B AND C OR F-18B ARE STILL APPLICABLE.

DO THE INTERNAL INSPECTIONS FOR F-10B, F-11B, F-16B AND C, F-17B AND C, OR F-18B, IF NECESSARY, AT THE SUBSEQUENT SUPPLEMENTAL STRUCTURAL INSPECTION DOCUMENT (SSID) INSPECTION ON THIS AIRPLANE. REFER TO SRM 51-00-4, FIGURE 3, FOR THE APPLICABLE SSI DATA.

Y THESE REPAIRS (DETAILS IV AND V) WILL HAVE AN EFFECT ON THE STRUCTURALLY SIGNIFICANT ITEM (SSI):

- NUMBER F-10 WHEN INSTALLED AT THE FORWARD CARGO DOOR CUTOUT, BUT THE SUPPLEMENTAL INSPECTIONS GIVEN IN TABLE IX OR TABLE X WILL MEET THE SSID INSPECTION REQUIREMENTS FOR F-10A AND C IN THE REPAIR AREA. HOWEVER, THE INSPECTIONS FOR F-10B ARE STILL APPLICABLE.
- NUMBER F-11 WHEN INSTALLED AT THE AFT CARGO DOOR CUTOUT, BUT THE SUPPLEMENTAL INSPECTIONS GIVEN IN TABLE IX OR TABLE X WILL MEET THE SSID INSPECTION REQUIREMENTS FOR F-11A AND C IN THE REPAIR AREA. HOWEVER, THE INSPECTIONS FOR F-11B ARE STILL APPLICABLE.
- NUMBER F-16 WHEN INSTALLED AT THE AFT GALLEY DOOR CUTOUT, BUT THE SUPPLEMENTAL INSPECTIONS GIVEN IN TABLE IX OR TABLE X WILL MEET THE SSID INSPECTION REQUIREMENTS FOR F-16A AND D IN THE REPAIR AREA. HOWEVER, THE INTERNAL INSPECTION ALTERNATIVES FOR F-16B, C AND E ARE STILL APPLICABLE. ALSO, A NEW INSPECTION METHOD IS NECESSARY FOR THE EXTERNAL INSPECTIONS OF F-16C. SEE TABLE XIII FOR NEW REQUIREMENTS FOR F-16C.

Skin, Doubler and Bear Strap Repair at Door Cutouts
Figure 46 (Sheet 6)

BOEING PROPRIETARY - Copyright © - Unpublished Work - See title page for details.

- NUMBER F-17 OR F-18 WHEN INSTALLED AT THE AFT ENTRY DOOR CUTOUT, BUT THE SUPPLEMENTAL INSPECTIONS GIVEN IN TABLE IX OR TABLE X WILL MEET THE SSID INSPECTION REQUIREMENTS FOR F-17A AND D OR F-18A IN THE REPAIR AREA. HOWEVER, THE INTERNAL INSPECTION ALTERNATIVES FOR F-17B, C AND E OR F-18B ARE STILL APPLICABLE. ALSO, A NEW INSPECTION METHOD IS NECESSARY FOR THE EXTERNAL INSPECTIONS OF F-17C. SEE TABLE XIII FOR NEW REQUIREMENTS FOR F-17C IN THE REPAIR AREA.
- NUMBER F-48 WHEN INSTALLLED AT THE FORWARD OR AFT CARGO, AFT GALLEY, OR AFT ENTRY DOOR CUTOUTS, AND THE DOUBLER EXTENDS OVER A LAP SPLICE. BUT, THE SUPPLEMENTAL INSPECTIONS GIVEN IN TABLE IX OR TABLE X FOR THE NEW CRITICAL DETAIL WILL MEET THE SSID INSPECTION REQUIREMENTS OF F-48 IN THE REPAIR AREA.

DO THE INTERNAL INSPECTIONS FOR F-10B, F-11B, F-16B, C AND E, F-17B, C AND E, OR F-18B, IF NECESSARY, AT THE SUBSEQUENT SUPPLEMENTAL STRUCTURAL INSPECTION DOCUMENT (SSID) INSPECTION ON THIS AIRPLANE. REFER TO SRM 51-00-4, FIGURE 3, FOR THE APPLICABLE SSI DATA.

Z THIS REPAIR (DETAIL VI) WILL HAVE AN EFFECT ON THE STRUCTURALLY SIGNIFICANT ITEM (SSI):

- NUMBER F-10 WHEN INSTALLED AT THE FORWARD CARGO DOOR CUTOUT, BUT THE SUPPLEMENTAL INSPECTIONS GIVEN IN TABLE XI WILL MEET THE SSID INSPECTION REQUIREMENTS FOR F-10A AND C IN THE REPAIR AREA. HOWEVER, THE INSPECTIONS FOR F-10B ARE STILL APPLICABLE.

DO THE INTERNAL INSPECTIONS FOR F-10B AT THE SUBSEQUENT SUPPLEMENTAL STRUCTURAL INSPECTION DOCUMENT (SSID) INSPECTION ON THIS AIRPLANE. REFER TO SRM 51-00-4, FIGURE 3, FOR THE APPLICABLE SSI DATA.

AA DO NOT COUNT THRESHOLD/SCUFF PLATE ATTACHMENT FASTENERS AS REPAIR FASTENERS.

AB IF IT IS POSSIBLE, MAKE SURE THAT THE REPAIR FASTENER ROWS ARE IN LINE WITH THE INITIAL FASTENERS AS SHOWN IN RELATED DETAILS. REFER TO DETAILS II THROUGH VI AND X, AND USE THE FASTENER SPACING GIVEN IN TABLE II. IF INITAL FASTENERS ARE SPACED GREATER THAN 1.00 INCH, THEN SPACE NEW FASTENERS AT 1.00 TO 1.10 INCHES.

AC IF THE AIRPLANE HAS LESS THAN 66,000 FLIGHT CYCLES, THE INSPECTION THRESHOLD IS THE EARLIER OF:

- THE INITIAL SCHEDULED INSPECTION AS GIVEN IN THE OPERATOR'S REPAIR ASSESSMENT PROGRAM (RAP)
- 66,000 FLIGHT CYCLES.

IF THE AIRPLANE HAS MORE THAN 66,000 FLIGHT CYCLES AND THE INITIAL SCHEDULED SUPPLEMENTAL STRUCTURAL INSPECTION DOCUMENT (SSID) INSPECTION HAS BEEN PERFORMED, THE INSPECTION THRESHOLD IS:

- 24,000 FLIGHT CYCLES AFTER THE REPAIR WAS INSTALLED.

AD DRILL A 0.94 TO 0.92 INCH DIAMETER HOLE AND COUNTERSINK THE HOLE FOR 100 DEGREES X 1.080 ± 0.010 INCHES DIAMETER.

AE CHANGE THE INNER DIAMETER OF THE WASHER TO 0.94 TO 0.92 INCH. CHAMFER THE REWORKED EDGES.

AF IF THE AIRPLANE HAS MORE THAN 66,000 FLIGHT CYCLES, DO THE NEW INSPECTION ALTERNATIVE AT THE SUBSEQUENT SCHEDULED SSID INSPECTION FOR F-16 AND F-17 ON THIS AIRPLANE.

AG IF THE CRITICAL FASTENER ROWS HAVE THREE OR LESS INITIAL FASTENER HOLES, IN A SEQUENCE, THE INSPECTION THRESHOLD IS THE LATER OF:

- THE INITIAL SCHEDULED INSPECTION AS GIVEN IN THE OPERATOR'S REPAIR ASSESSMENT PROGRAM (RAP)
- 60,000 FLIGHT CYCLES AFTER THE REPAIR WAS INSTALLED.

IF ONE OR MORE OF THE CRITICAL FASTENER ROWS HAS MORE THAN THREE INITIAL FASTENER HOLES, IN A SEQUENCE, THE INSPECTION THRESHOLD IS THE LATER OF:

- THE INITIAL SCHEDULED INSPECTION AS GIVEN IN THE OPERATOR'S REPAIR ASSESSMENT PROGRAM (RAP)
- 60,000 FLIGHT CYCLES AFTER THE REPAIR WAS INSTALLED, IF THE INITIAL FASTENER HOLES HAVE BEEN ZERO-TIMED
- 4,000 FLIGHT CYCLES AFTER THE REPAIR WAS INSTALLED, IF THE INITIAL FASTENER HOLES HAVE NOT BEEN ZERO-TIMED.

AH THE PERFORMANCE ADJUSTMENTS ARE GIVEN IN THE AIRPLANE FLIGHT MANUAL APPENDIX TITLED "PERFORMANCE ADJUSTMENTS FOR OPERATIONS WITH EXTENSIVE FUSELAGE REPAIRS". GIVE THE SUM OF ALL THE REPAIRS DONE WITH THIS FIGURE, FIGURE 48 AND FIGURE 49 IN SQUARE INCHES TO THE DISPATCHER FOR SELECTION OF THE APPROPRIATE PERFORMANCE ADJUSTMENT.

Skin, Doubler and Bear Strap Repair at Door Cutouts
Figure 46 (Sheet 7)

BOEING PROPRIETARY - Copyright © - Unpublished Work - See title page for details.

FASTENER SYMBOLS

REFERENCE FASTENER LOCATION. IF THIS FASTENER IS REMOVED, INSTALL A FASTENER AS GIVEN IN TABLE I. FOR SKIN LAP JOINT FASTENERS, REFER TO TABLE III.

INITIAL FASTENER LOCATION. REFER TO TABLES I AND III FOR FASTENERS THAT ARE NOT PART OF AN INITIAL REPAIR. REFER TO TABLES II AND III FOR FASTENERS THAT ARE PART OF AN INITIAL REPAIR. [N]

REPAIR FASTENER LOCATION. INSTALL A BACB30FN6A OR BACB30FM6A HEX DRIVE BOLT WITH A BACC30M COLLAR. [N]

INITIAL FASTENER	REPLACEMENT FASTENER FOR FRAME, STRINGER AND BEAR STRAP
DOUBLE COUNTERSINK RIVET	DOUBLE COUNTERSINK BACR15CE6D
RIVET	SAME DIAMETER BACB30KF()A OR OPTIONALLY A BACB30KK()A 1/32 OVERSIZE WITH A BACC30R COLLAR. [Q] [N]
COUNTERSINK SHEAR HEAD HEX DRIVE BOLT	SAME DIAMETER BACB30FQ()A 1/64 OVERSIZE WITH A BACC30M COLLAR, OR BACB30KF( )A 1/32 OVERSIZE WITH A BACC30R COLLAR. OPTIONALLY, USE SAME DIAMETER BACB30FP()A 1/64 OVERSIZE WITH A BACC30M COLLAR, OR BACB30KK()A 1/32 OVERSIZE WITH A BACC30R COLLAR. [M] [Q] [N]
COUNTERSINK TENSION HEAD HEX DRIVE BOLT	USE SAME DIAMETER BACB30MC()A 1/64 OVERSIZE WITH A BACC30M COLLAR OR A BACB30MD()A 1/32 OVERSIZE WITH A BACC30R COLLAR. [M] [N]
PROTRUDING SHEAR HEAD HEX DRIVE BOLT	USE SAME DIAMETER BACB30FP()A 1/64 OVERSIZE WITH A BACC30M COLLAR OR BACB30KK()A 1/32 OVERSIZE WITH A BACC30R COLLAR. [M] [N]
PROTRUDING TENSION HEAD HEX DRIVE BOLT	SAME DIAMETER BACB30MC()A 1/64 OVERSIZE WITH A BACC30M COLLAR OR BACB30MD()A 1/32 OVERSIZE WITH A BACC30R COLLAR. [M] [N]
SCREW	SAME TYPE AND DIAMETER SCREW [N]

REPLACEMENT FASTENER FOR INITIAL FASTENER LOCATIONS THAT ARE NOT PART OF AN INITIAL REPAIR

TABLE I

Skin, Doubler, and Bear Strap Repair at Door Cutouts
Figure 46 (Sheet 8)

BOEING PROPRIETARY - Copyright © - Unpublished Work - See title page for details.

INITIAL FASTENER HOLE SIZES (INCH)	FOR HOLES WHERE CLEAN-UP IS NOT NECESSARY		FOR HOLES WHERE CLEAN-UP IS NECESSARY	
	NECESSARY FASTENER SPACING	REAM HOLE AS NECESSARY TO INSTALL THE FASTENER IN A TRANSITION FIT HOLE	NECESSARY FASTENER SPACING	REAM HOLE AS NECESSARY TO INSTALL THE FASTENER IN A TRANSITION FIT HOLE
0.165 to 0.190	0.76 to 1.14	BACB30FN6A or BACB30FM6A [N]	0.88 to 1.30	BACB30KF6A or BACB30KK6A [N]
0.191 to 0.216	0.88 to 1.30	BACB30KF6A or BACB30KK6A [N]	1.0 to 1.5	BACB30FM8A [N]
0.217 to 0.261	1.0 to 1.5	BACB30FM8A [N]	CONTACT BOEING	CONTACT BOEING
GREATER THAN 0.261	CONTACT BOEING	CONTACT BOEING	CONTACT BOEING	CONTACT BOEING

NOTES:

- CONTACT BOEING IF YOU HAVE A HOLE SIZE OR FASTENER SPACING THAT IS NOT SHOWN.
- IF ANY INITIAL REPAIR HOLES ARE COUNTERSUNK IN THE SKIN, CONTACT BOEING WITH THE HOLE SIZES, SPACING AND COUNTERSINK DEPTH/TYPE.
- WHEN YOU OVERSIZE THE HOLES, MAKE SURE THAT YOU HAVE A 1.70D MINIMUM EDGE MARGIN IN ALL STRUCTURE COMMON TO THE OVERSIZE HOLES.

REPLACEMENT FASTENER FOR INITIAL FASTENER LOCATIONS THAT ARE PART OF AN INITIAL REPAIR
TABLE II

INITIAL FASTENER TYPE AND SIZE	OVERSIZE THE INITIAL FASTENER HOLE TO:	REPLACEMENT SKIN LAP JOINT FASTENER THAT ARE NOT IN THE REPAIR AREA	REPLACEMENT SKIN LAP JOINT FASTENER THAT ARE IN THE REPAIR AREA
RIVET 5/32 OR 7/32	0.216 - 0.219		BACB30KK6A BACC30R()
	0.219 - 0.221	BACR15ET7AD	
RIVET 3/16 OR 1/4	0.247- 0.250	MS20470AD8	
	0.263 – 0.266		BACB30FP8A BACC30M()
HEX DRIVE BOLT 3/16	0.247- 0.250	BACB30FM8A BACC30M()	
3/16 OR 1/4	0.263- 0.266		BACB30FP8A BACC30M()

REPLACEMENT FASTENER FOR SKIN LAP JOINT
TABLE III

Skin, Doubler, and Bear Strap Repair at Door Cutouts
Figure 46 (Sheet 9)

BOEING PROPRIETARY - Copyright © - Unpublished Work - See title page for details.

REPAIR ZONE (SEE DEATAIL I)	FASTENERS	MINIMUM NUMBER OF FASTENER ROWS BEYOND THE DAMAGE COMMON TO OUTER REPAIR PART SEE DETAILS	
		FORWARD-AFT DIRECTION	UP-DOWN DIRECTION
A	L	3	5
B	L	5	3
C	L	5	5

FASTENER REQUIREMENTS FOR REPAIRS
TABLE IV

MATERIAL REMOVED	NECESSARY REPAIR PARTS
SKIN ONLY	[1], [4], AND [5] (IF [5] IS NECESSARY)
SKIN AND BONDED DOUBLER	[1], [2], [4], AND [5] (IF [5] IS NECESSARY)
SKIN, BONDED DOUBLER AND BEAR STRAP	[1], [2], [3],[4], AND [5](IF [5] IS NECESSARY)
SKIN AND BEAR STRAP	[1], [3], [4], AND [5] (IF [5] IS NECESSARY)
BONDED DOUBLER AND BEAR STRAP	[1], [3], [4], AND [5] (IF [5] IS NECESSARY)
BEAR STRAP	[2], [3],[4], AND [5] (IF [5] IS NECESSARY)

NECESSARY REPAIR PARTS
TABLE V

NUMBER	PART		QTY	MATERIAL
1	INNER PLATE	P	1	0.063 INCH THICK, CLAD 2024-T3
2	PLATE	P	1	0.063 INCH THICK, CLAD 2024-T3
3	OUTER PLATE	P	1	0.125 INCH THICK, CLAD 2024-T3
4	FILLER	A	1	CLAD 2024-T3
5	FILLER	C	1	CLAD 2024-T3
6	WASHER	AE	1	NAS1252-1416L
7	NUT		1	BACN10DR-10

REPAIR MATERIAL
TABLE VI

Skin, Doubler, and Bear Strap Repair at Door Cutouts
Figure 46 (Sheet 10)

BOEING PROPRIETARY - Copyright © - Unpublished Work - See title page for details.

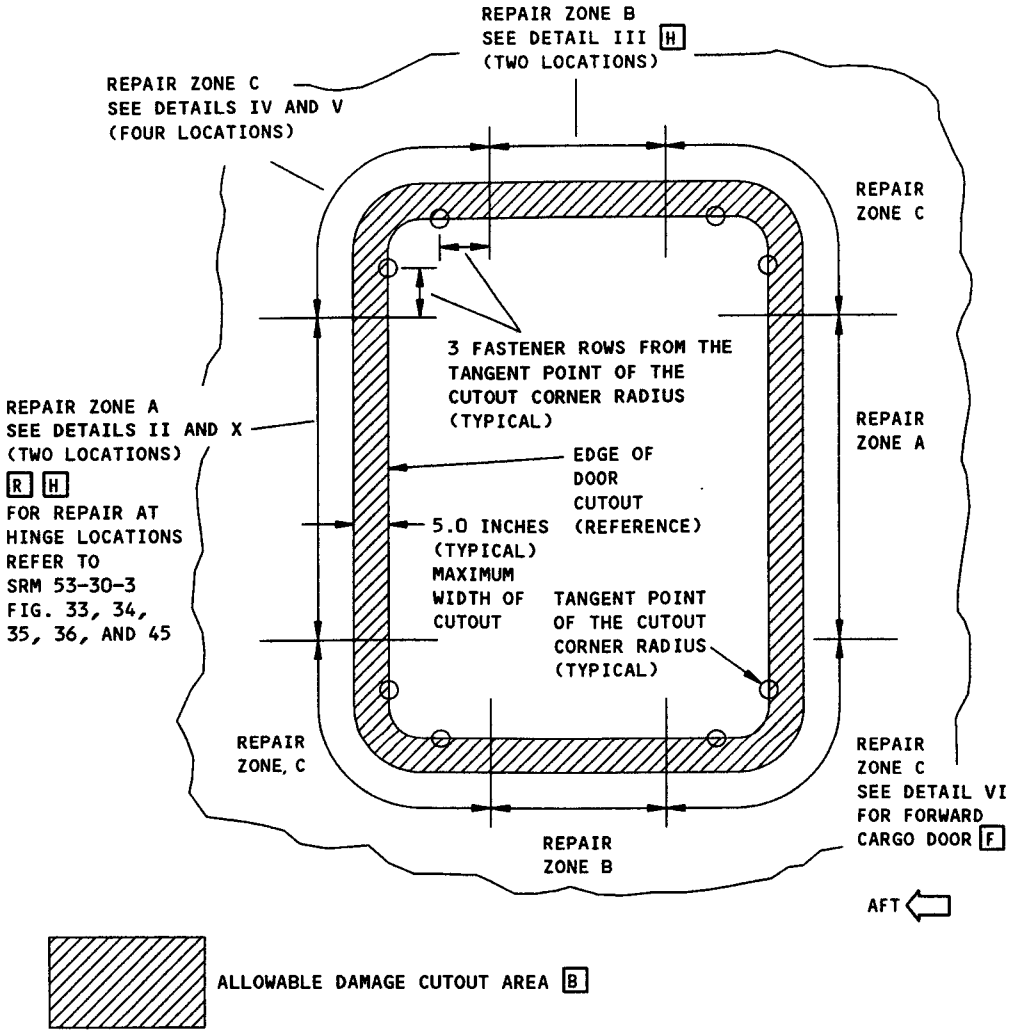

GENERAL REPAIR AROUND FUSELAGE DOOR CUTOUTS
DETAIL I
(TYPICAL)

Skin, Doubler and Bear Strap Repair at Door Cutouts
Figure 46 (Sheet 11)

BOEING PROPRIETARY - Copyright © - Unpublished Work - See title page for details.

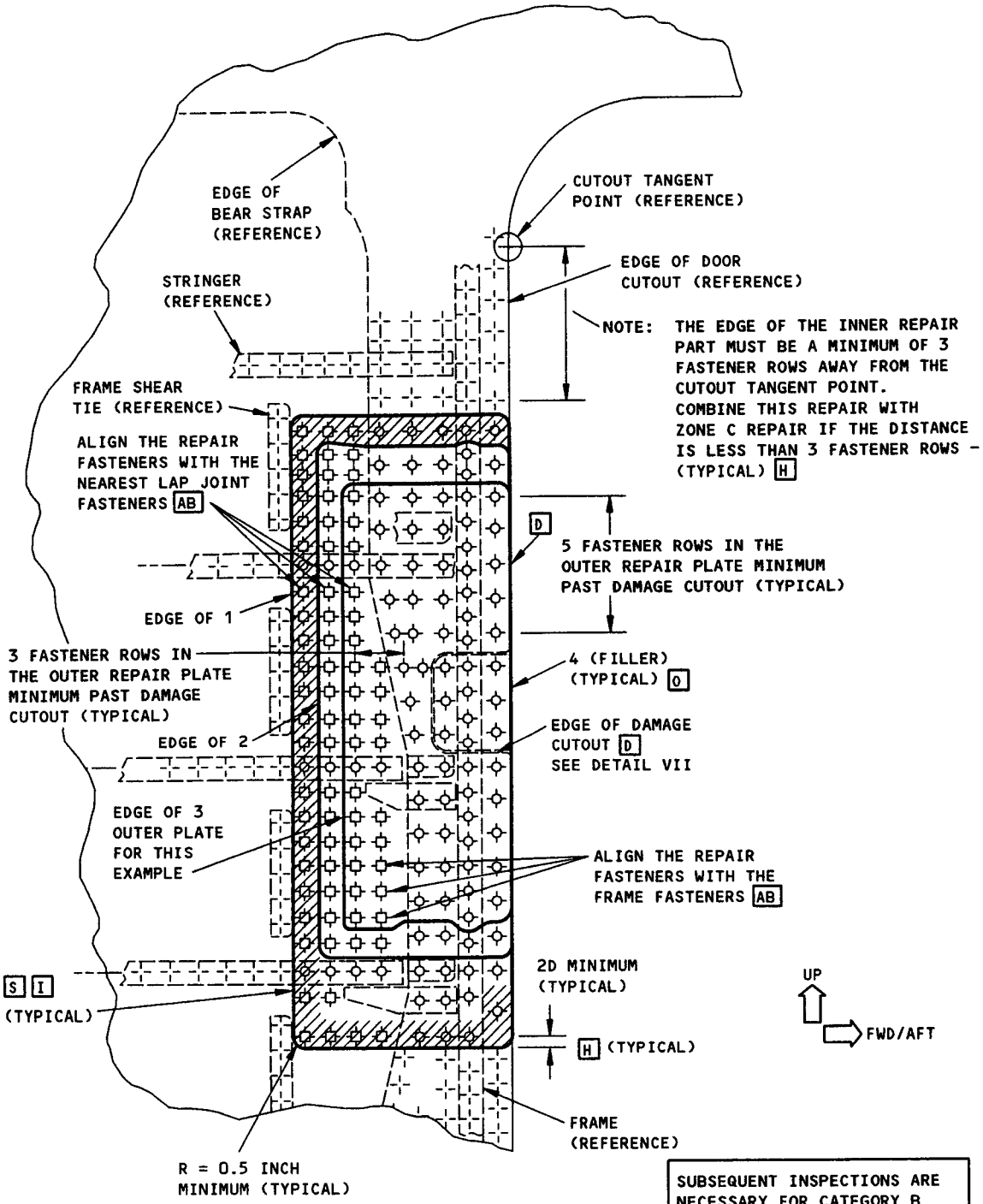

Skin, Doubler and Bear Strap Repair at Door Cutouts
Figure 46 (Sheet 12)

BOEING PROPRIETARY - Copyright © - Unpublished Work - See title page for details.

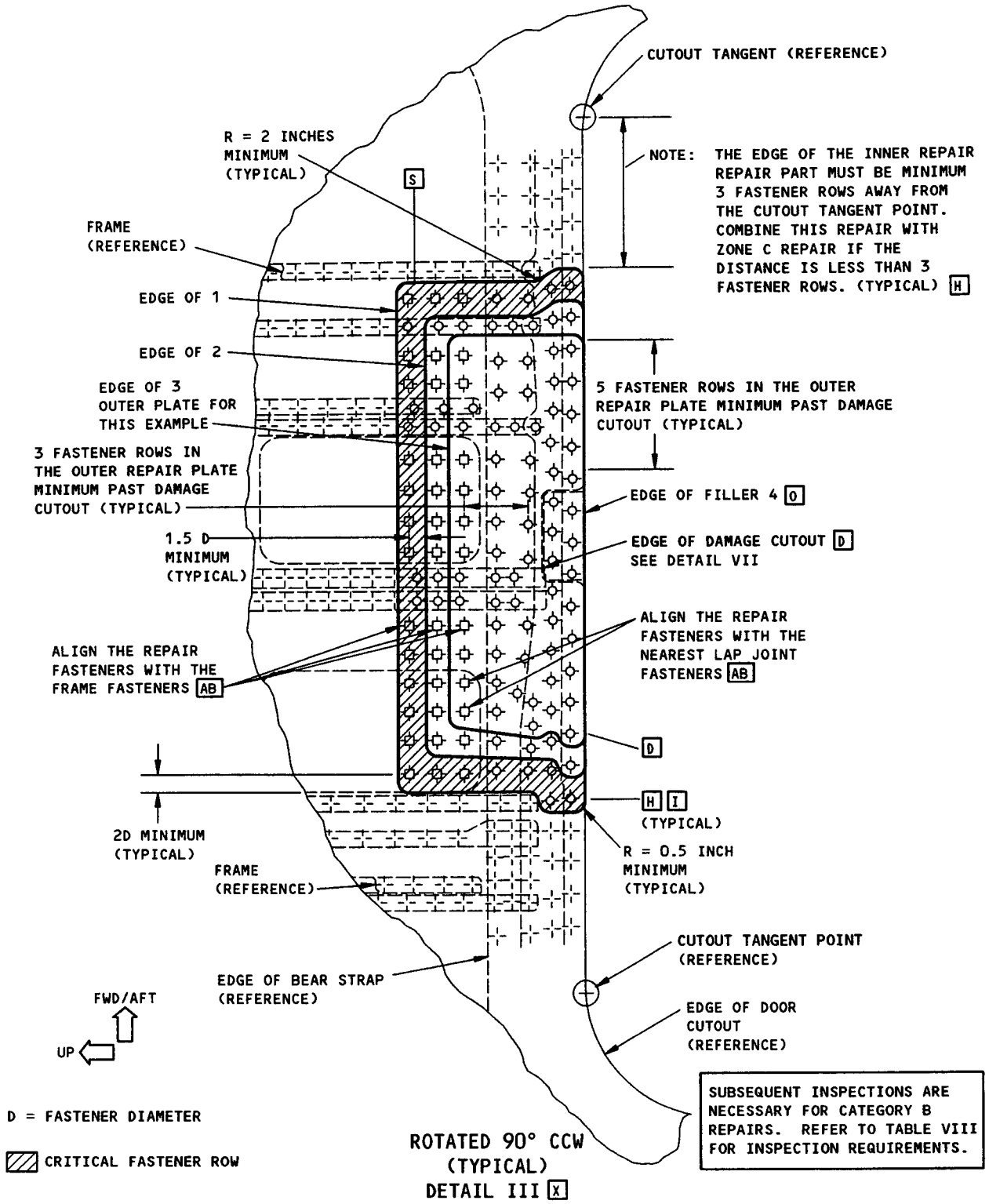

Skin, Doubler and Bear Strap Repair at Door Cutouts
Figure 46 (Sheet 13)

BOEING PROPRIETARY - Copyright © - Unpublished Work - See title page for details.

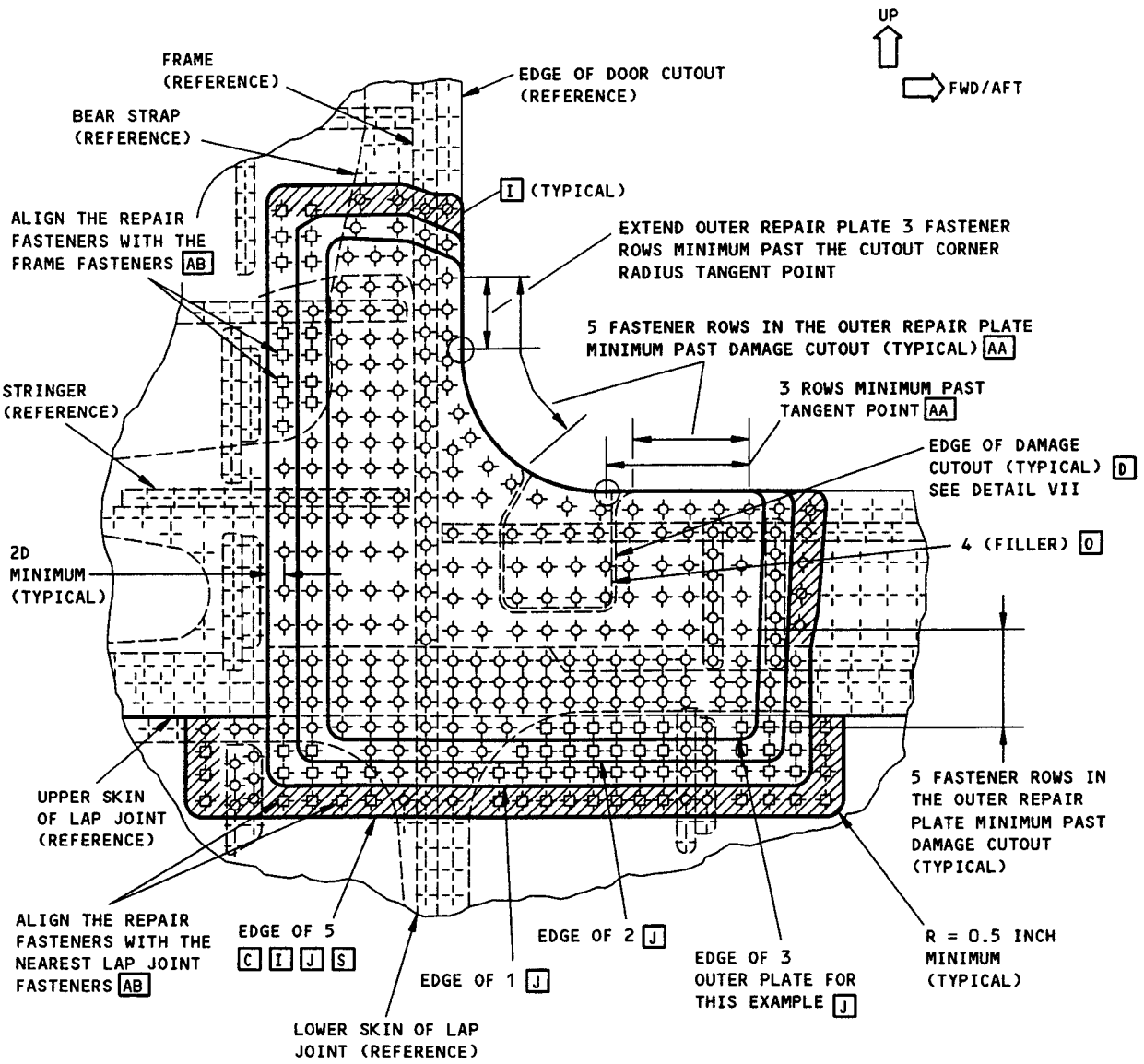

SUBSEQUENT INSPECTIONS ARE NECESSARY FOR CATEGORY B REPAIRS. REFER TO TABLE IX FOR INSPECTION REQUIREMENTS.

D = FASTENER DIAMETER

CRITICAL FASTENER ROW

TYPICAL CARGO DOOR LOWER CORNER REPAIR, AFT GALLEY AND ENTRY DOORS ARE SIMILAR (PART 5 (FILLER) USED ON CARGO DOOR LOWER CORNERS REPAIR ONLY)

DETAIL IV Y

Skin, Doubler and Bear Strap Repair at Door Cutouts
Figure 46 (Sheet 14)

BOEING PROPRIETARY - Copyright © - Unpublished Work - See title page for details.

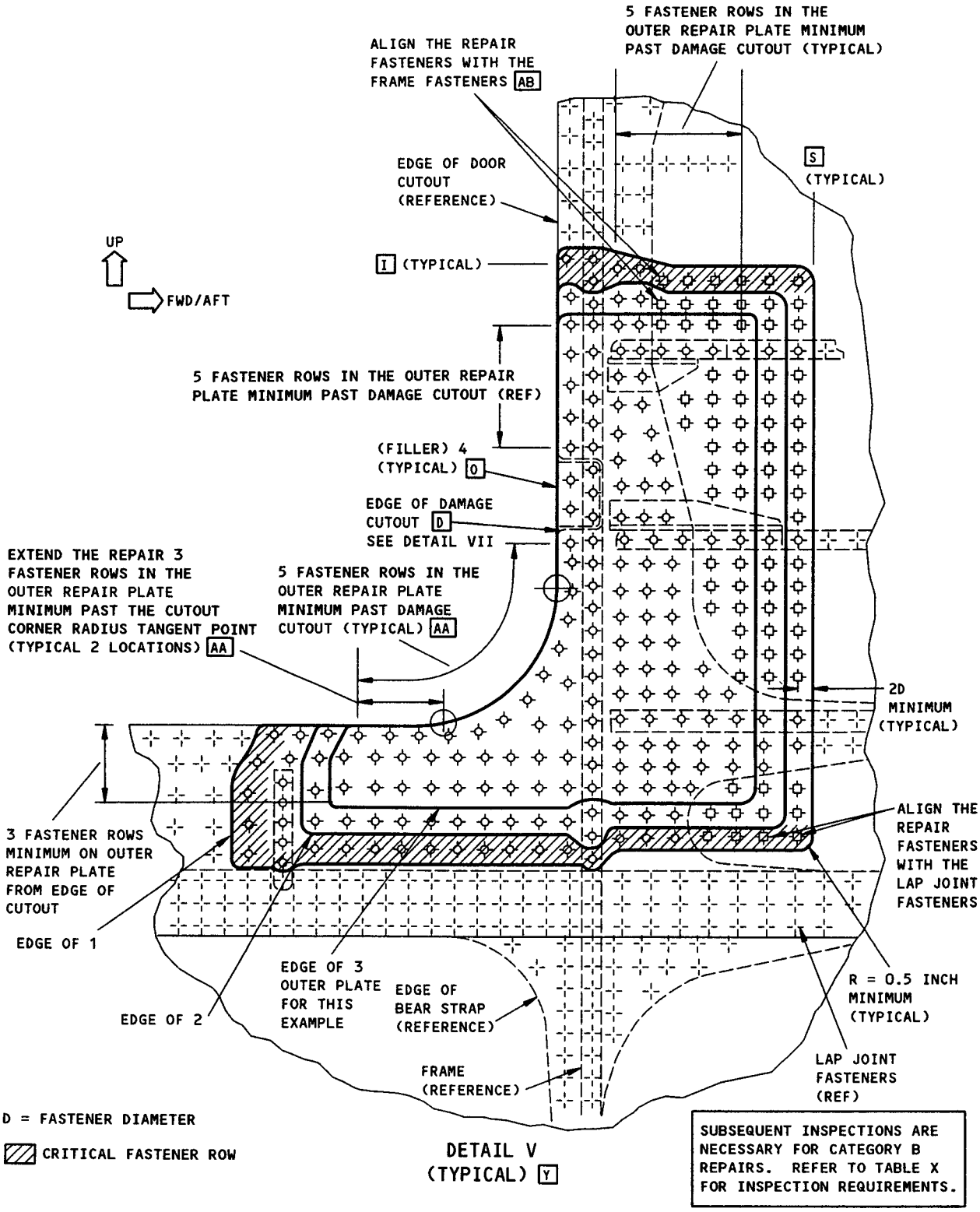

Skin, Doubler and Bear Strap Repair at Door Cutouts
Figure 46 (Sheet 15)

BOEING PROPRIETARY - Copyright © - Unpublished Work - See title page for details.

ANY REPAIR PARTS AT THIS DOOR CORNER MUST EXTEND AROUND THE STATIC PORT AS SHOWN. THE REPAIR SIZE ZONE DESCRIPTIONS GIVEN IN SRM 51-70 FIGURE 8 ARE NOT APPLICABLE TO THIS REPAIR.

STATIC PORT INSTALLATION PART 3 (DOUBLER) IS USED

SECTION B-B F

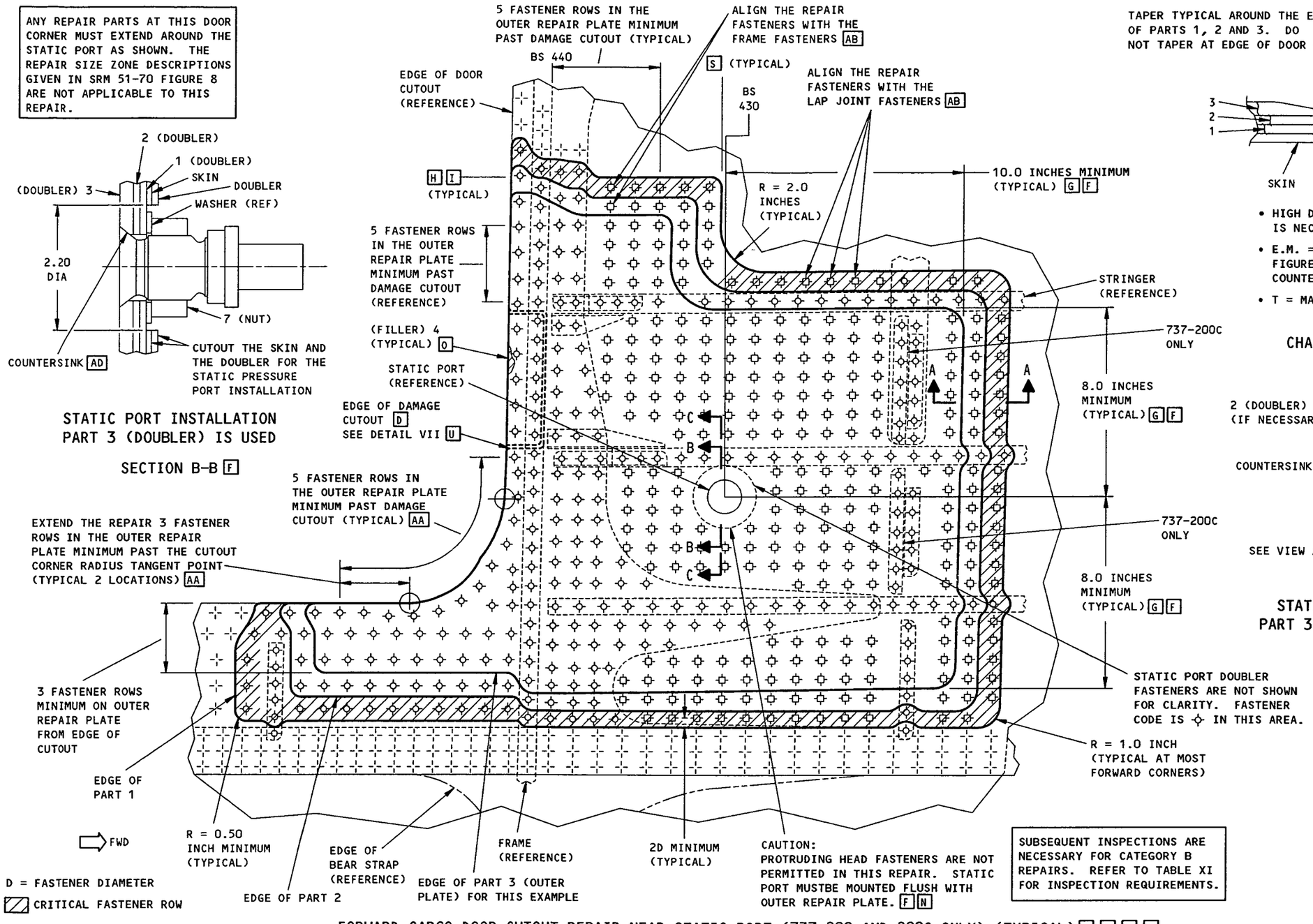

SUBSEQUENT INSPECTIONS ARE NECESSARY FOR CATEGORY B REPAIRS. REFER TO TABLE XI FOR INSPECTION REQUIREMENTS.

FORWARD CARGO DOOR CUTOUT REPAIR NEAR STATIC PORT (737-200 AND 200C ONLY) (TYPICAL) U Z N F
DETAIL VI

TAPER TYPICAL AROUND THE EDGES OF PARTS 1, 2 AND 3. DO NOT TAPER AT EDGE OF DOOR CUTOUT).

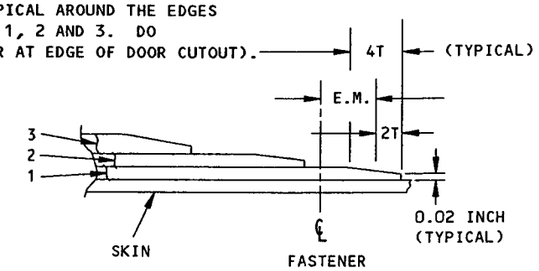

- HIGH DEGREE OF AERODYNAMIC SMOOTHNESS IS NECESSARY.
- E.M. = EDGE MARGIN AS GIVEN IN FIGURE 1 CHAPTER 51-30-6 FOR 100° COUNTERSUNK FASTENER IN SINGLE SHEAR.
- T = MATERIAL THICKNESS

SECTION A-A
CHAMFERED EXTERNAL PATCH

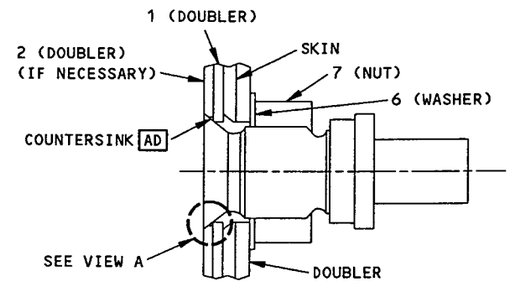

STATIC PORT INSTALLATION PART 3 (DOUBLER) IS NOT USED

SECTION C-C F

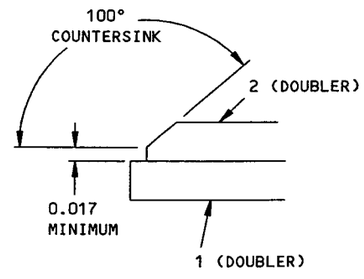

VIEW A (ROTATED 90° CW)

Skin, Doubler and Bear Strap Repair at Door Cutouts
Figure 46 (Sheet 16)

BOEING PROPRIETARY - Copyright © - Unpublished Work - See title page for details.

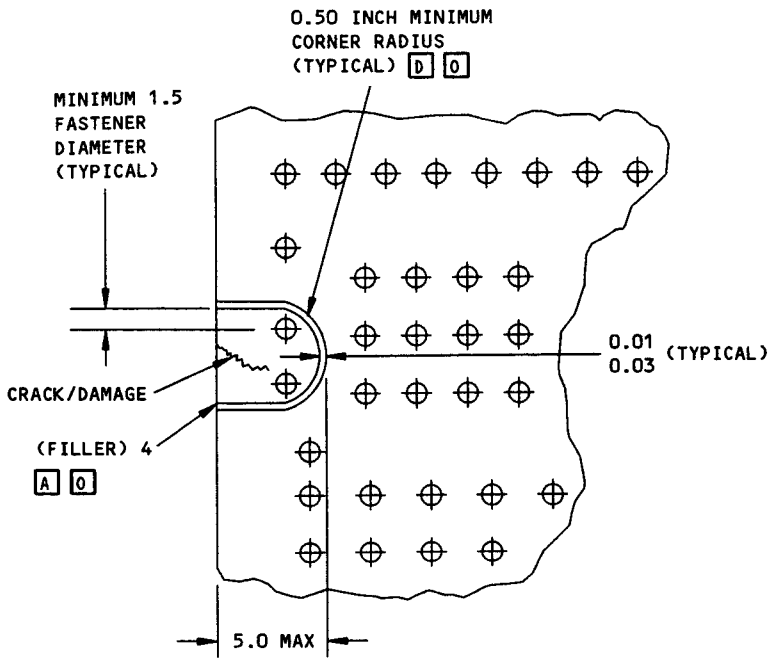

DETAIL VII
BEAR STRAP, DOUBLER AND SKIN CRACK/DAMAGE CUTOUT
(TYPICAL)

Skin, Doubler and Bear Strap Repair at Door Cutouts
Figure 46 (Sheet 17)

BOEING PROPRIETARY - Copyright © - Unpublished Work - See title page for details.

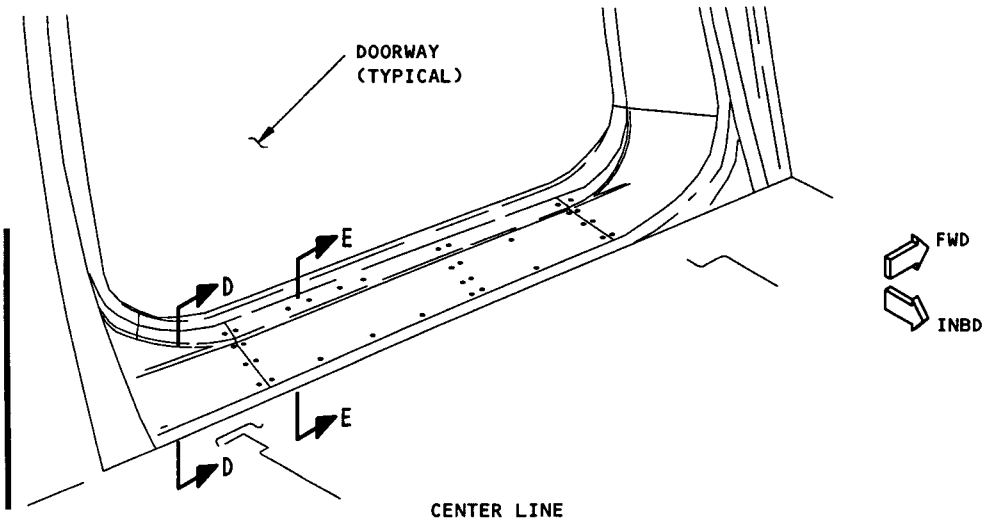

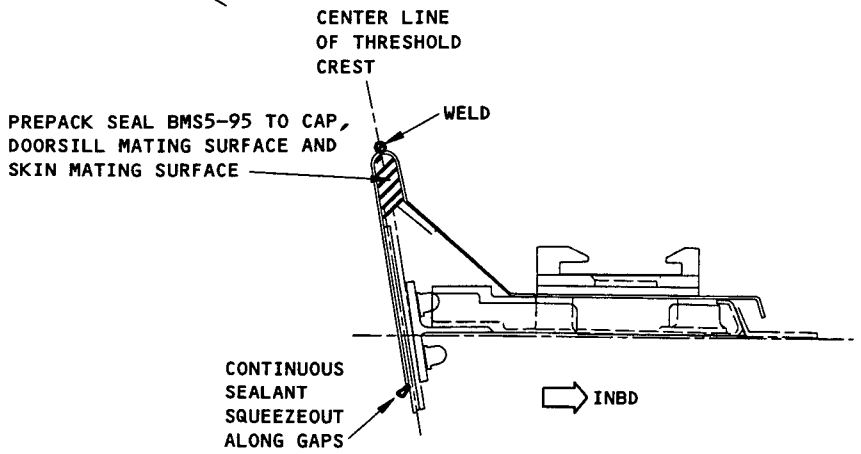

SECTION D-D

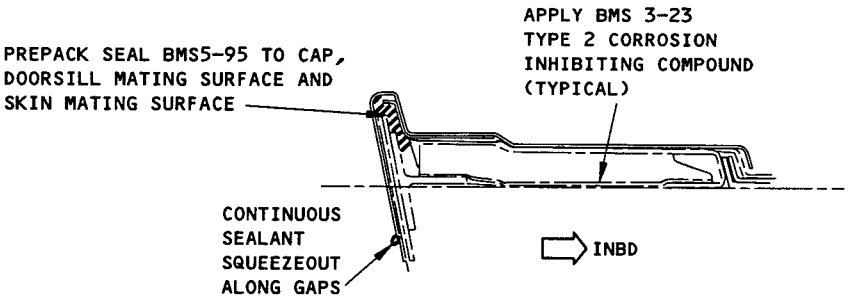

SECTION E-E

THRESHOLD INSTALLATION
(TYPICAL)

DETAIL VIII

Skin, Doubler and Bear Strap Repair at Door Cutouts
Figure 46 (Sheet 18)

BOEING PROPRIETARY - Copyright © - Unpublished Work - See title page for details.

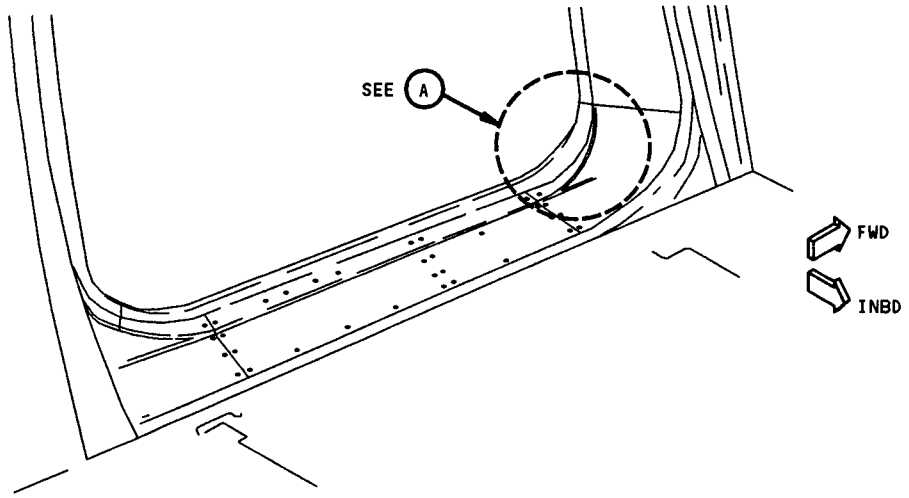

SCUFF PLATES TO DOORWAY FRAME FAIRING COMPOUND APPLICATION (TYPICAL)

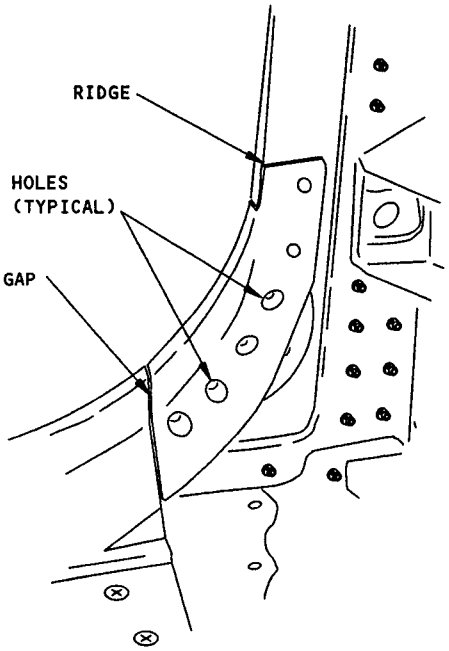

BEFORE APPLICATION OF FAIRING COMPOUND

A

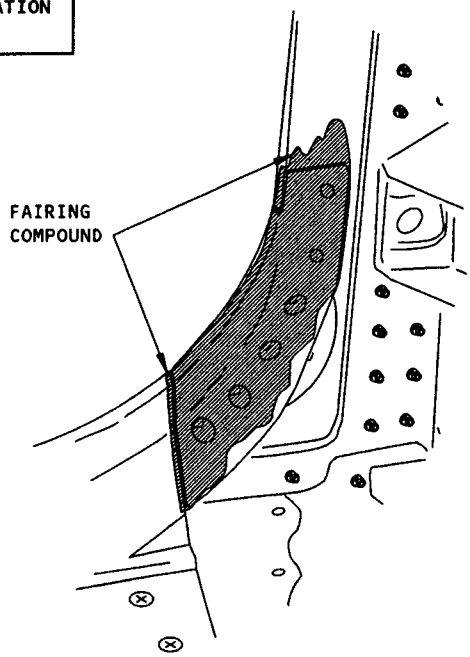

AFTER APPLICATION OF FAIRING COMPOUND

A

DETAIL IX
FAIRING COMPOUND APPLICATION
(TYPICAL)

Skin, Doubler and Bear Strap Repair at Door Cutouts
Figure 46 (Sheet 19)

BOEING PROPRIETARY - Copyright © - Unpublished Work - See title page for details.

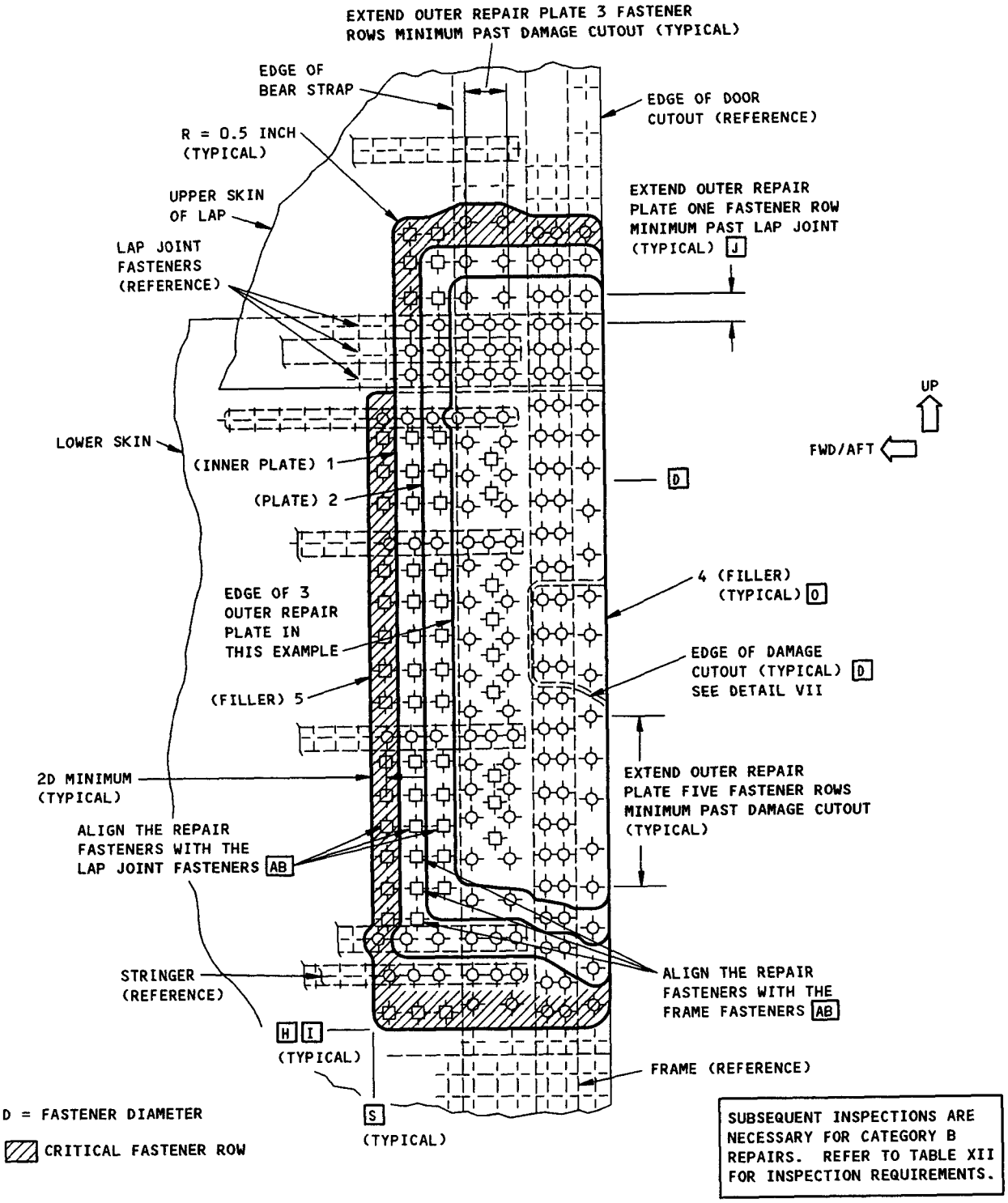

REPAIR AT A LAP JOINT (TYPICAL)
DETAIL X W

Skin, Doubler and Bear Strap Repair at Door Cutouts
Figure 46 (Sheet 20)

BOEING PROPRIETARY - Copyright © - Unpublished Work - See title page for details.

CATEGORY B REPAIR AND SSI F-10A AND C, F-11A AND C, F-16A AND D, F-17A AND D, AND F-18A INSPECTION REQUIREMENTS FOR DETAIL II					
TYPE OF STRUCTURE	INSPECTION THRESHOLD	ALTERNATIVE	REPEAT INSPECTION ALTERNATIVES		
			METHOD	INTERVAL	REFERENCES
AFT ENTRY AND GALLEY DOOR CUTOUT FORWARD EDGES	AC	I	DETAILED VISUAL	4,000 FLIGHT CYCLES	
			MEDIUM FREQUENCY EDDY CURRENT (MFEC)	24,000 FLIGHT CYCLES	737 NDT, PART 6, 53-30-00, FIGURE 6
			GENERAL VISUAL (SURVEILLANCE)		
		II	DETAILED VISUAL	4,000 FLIGHT CYCLES	
			LOW FREQUENCY EDDY CURRENT (LFEC)		737 NDT, PART 6, 53-30-00, FIGURE 5
AFT ENTRY AND GALLEY DOOR CUTOUT AFT EDGES	AC	III	DETAILED VISUAL	4,000 FLIGHT CYCLES	
			MEDIUM FREQUENCY EDDY CURRENT (MFEC)	24,000 FLIGHT CYCLES	737 NDT, PART 6, 53-30-00, FIGURE 6
			GENERAL VISUAL (SURVEILLANCE)		
		IV	DETAILED VISUAL	4,000 FLIGHT CYCLES	
			LOW FREQUENCY EDDY CURRENT (LFEC)	19,000 FLIGHT CYCLES	737 NDT, PART 6, 53-30-00, FIGURE 5
FORWARD AND AFT CARGO DOOR CUTOUT FORWARD AND AFT EDGES	AC	V	DETAILED VISUAL	4,000 FLIGHT CYCLES	
			MEDIUM FREQUENCY EDDY CURRENT (MFEC)	15,000 FLIGHT CYCLES	737 NDT, PART 6, 53-30-00, FIGURE 6
			GENERAL VISUAL (SURVEILLANCE)		
		VI	DETAILED VISUAL	4,000 FLIGHT CYCLES	
			LOW FREQUENCY EDDY CURRENT (LFEC)	3,800 FLIGHT CYCLES	737 NDT, PART 6, 53-30-00, FIGURE 5
NOTE: ALTERNATIVE I, III AND V: REFER TO DETAIL XI FOR INSPECTION AREAS. ALTERNATIVE II, IV AND VI: REFER TO DETAIL XII FOR INSPECTION AREAS.					

TABLE VII

Skin, Doubler and Bear Strap Repair at Door Cutouts
Figure 46 (Sheet 21)

BOEING PROPRIETARY - Copyright © - Unpublished Work - See title page for details.

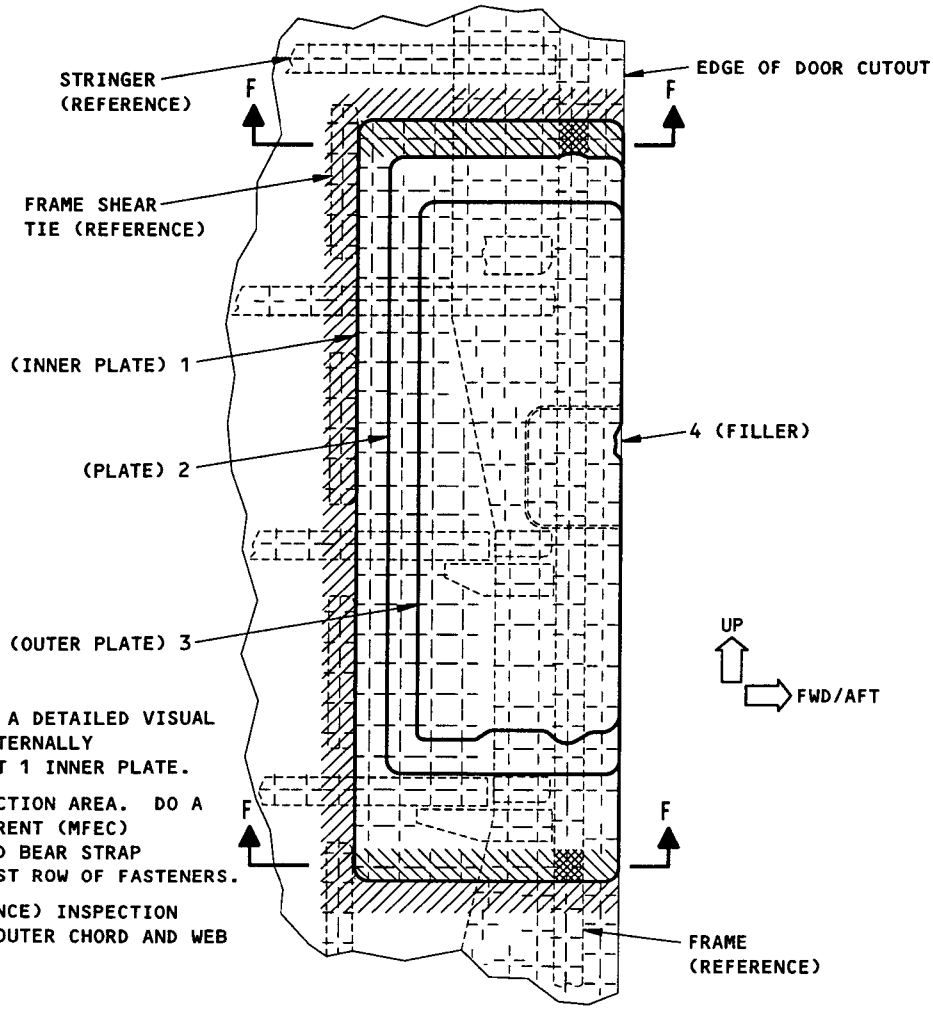

SKIN INSPECTION AREA. DO A DETAILED VISUAL INSPECTION OF THE SKIN EXTERNALLY ALONG THE EDGE OF THE PART 1 INNER PLATE.

SKIN AND BEAR STRAP INSPECTION AREA. DO A MEDIUM FREQUENCY EDDY CURRENT (MFEC) INSPECTION OF THE SKIN AND BEAR STRAP INTERNALLY AROUND THE FIRST ROW OF FASTENERS.

GENERAL VISUAL (SURVEILLANCE) INSPECTION AREA. INSPECT THE FRAME OUTER CHORD AND WEB INTERNALLY.

INSPECTION AREAS FOR ALTERNATIVE I, III OR V IN TABLE VII AT AFT ENTRY, GALLEY AND AFT AND FORWARD CARGO DOOR CUTOUTS (TYPICAL)

DETAIL XI

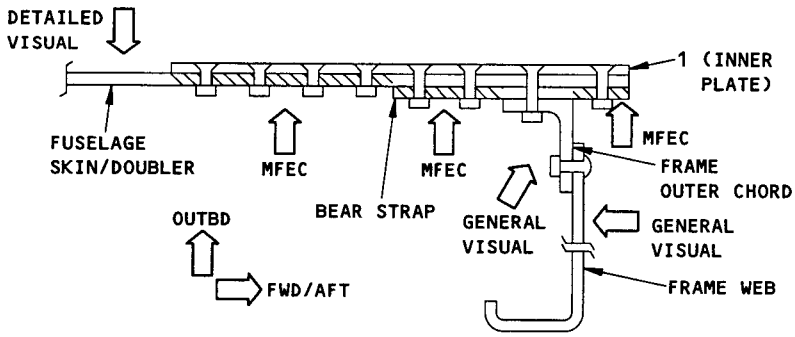

SECTION F-F

Skin, Doubler and Bear Strap Repair at Door Cutouts
Figure 46 (Sheet 22)

BOEING PROPRIETARY - Copyright © - Unpublished Work - See title page for details.

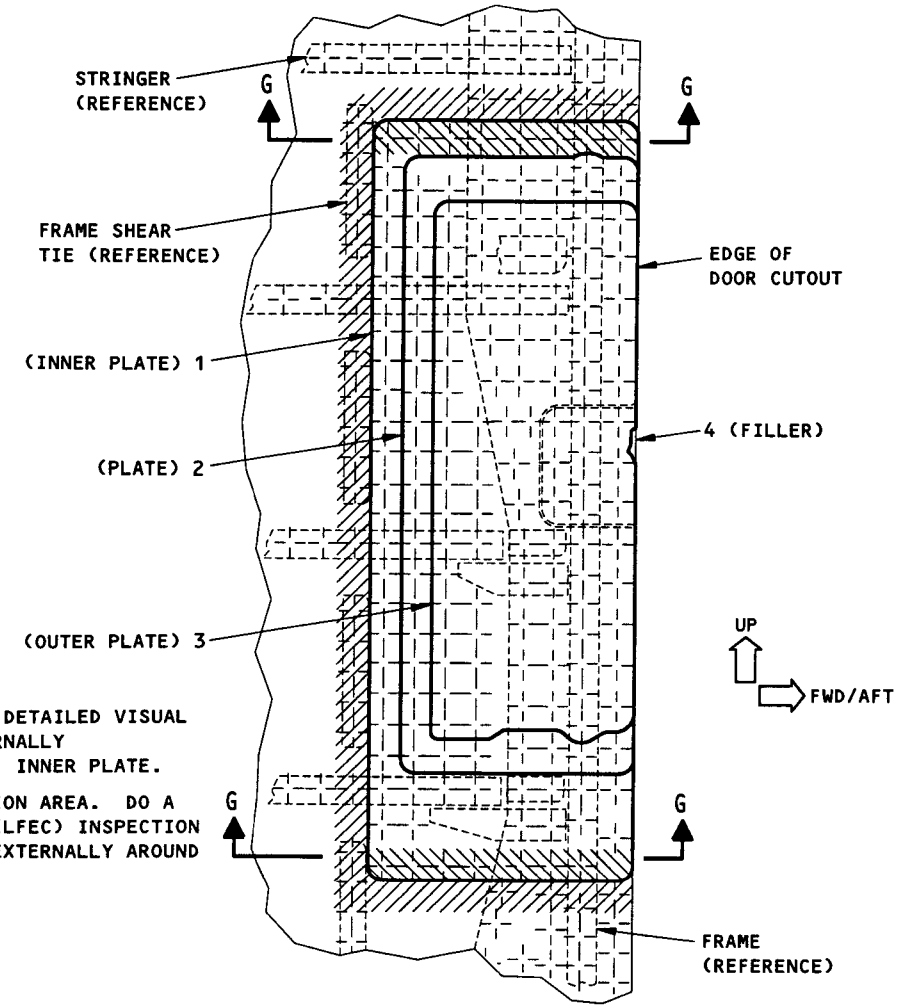

SKIN INSPECTION AREA. DO A DETAILED VISUAL INSPECTION OF THE SKIN EXTERNALLY ALONG THE EDGE OF THE PART 1 INNER PLATE.

SKIN AND BEAR STRAP INSPECTION AREA. DO A LOW FREQUENCY EDDY CURRENT (LFEC) INSPECTION OF THE SKIN AND BEAR STRAP EXTERNALLY AROUND THE FIRST ROW OF FASTENERS.

INSPECTION AREA FOR ALTERNATIVE II, IV OR VI IN TABLE VII AT AFT ENTRY, GALLEY AND AFT AND FORWARD CARGO DOOR CUTOUTS (TYPICAL)

DETAIL XII

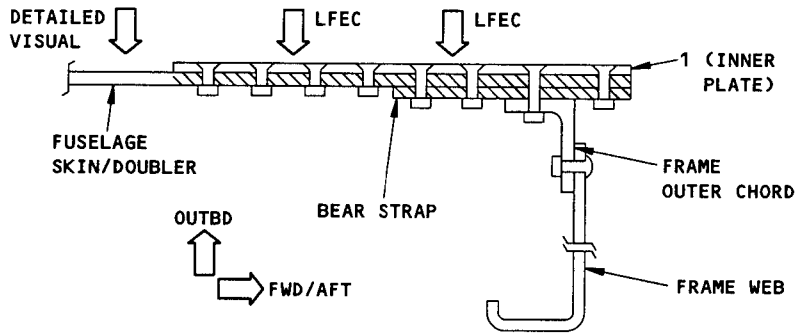

SECTION G-G

Skin, Doubler and Bear Strap Repair at Door Cutouts
Figure 46 (Sheet 23)

BOEING PROPRIETARY - Copyright © - Unpublished Work - See title page for details.

CATEGORY B REPAIR INSPECTION REQUIREMENTS FOR DETAIL III					
TYPE OF STRUCTURE	INSPECTION THRESHOLD	ALTERNATIVE	REPEAT INSPECTION ALTERNATIVES		
			METHOD	INTERVAL	REFERENCES
AFT ENTRY AND GALLEY DOOR CUTOUTS	AG	I	MFEC	24,000 FLIGHT CYCLES	737 NDT, PART 6, 53-30-00, FIGURE 6
			GENERAL VISUAL (SURVEILLANCE)		
		II	LFEC	4,000 FLIGHT CYCLES	737 NDT, PART 6, 53-30-00, FIGURE 5
FWD AND AFT CARGO DOOR CUTOUTS	AG	III	MFEC	15,000 FLIGHT CYCLES	737 NDT, PART 6, 53-30-00, FIGURE 6
			GENERAL VISUAL (SURVEILLANCE)		
		IV	DETAILED VISUAL INSPECTION	8,000 FLIGHT CYCLES	
			GENERAL VISUAL (SURVEILLANCE)		
		V	LFEC	3,800 FLIGHT CYCLES	737 NDT, PART 6, 53-30-00, FIGURE 5

NOTE: ALTERNATIVE I AND III: REFER TO DETAIL XIII FOR INSPECTION AREAS.
ALTERNATIVE II AND V: REFER TO DETAIL XIV FOR INSPECTION AREAS.
ALTERNATIVE IV: REFER TO DETAIL XV FOR INSPECTION AREAS.

TABLE VIII

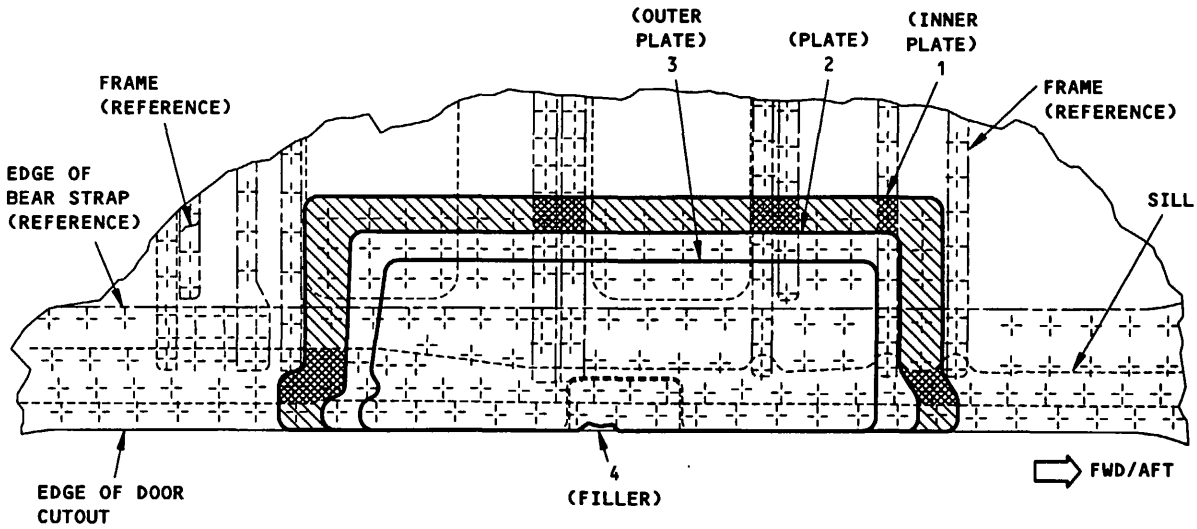

SKIN AND BEAR STRAP INSPECTION AREAS. DO A MEDIUM FREQUENCY EDDY CURRENT (MFEC) INSPECTION OF THE SKIN AND BEAR STRAP INTERNALLY AROUND THE FIRST ROW OF FASTENERS.

GENERAL VISUAL (SURVEILLANCE) INSPECTION AREAS. INSPECT THE SILL OUTER CHORD AND OTHER STRUCTURE INTERNALLY.

INSPECTION AREAS FOR ALTERNATIVE I AND III IN TABLE VIII AT AFT ENTRY AND GALLEY, AND FORWARD AND AFT CARGO DOOR CUTOUTS

DETAIL XIII

Skin, Doubler and Bear Strap Repair at Door Cutouts
Figure 46 (Sheet 24)

BOEING PROPRIETARY - Copyright © - Unpublished Work - See title page for details.

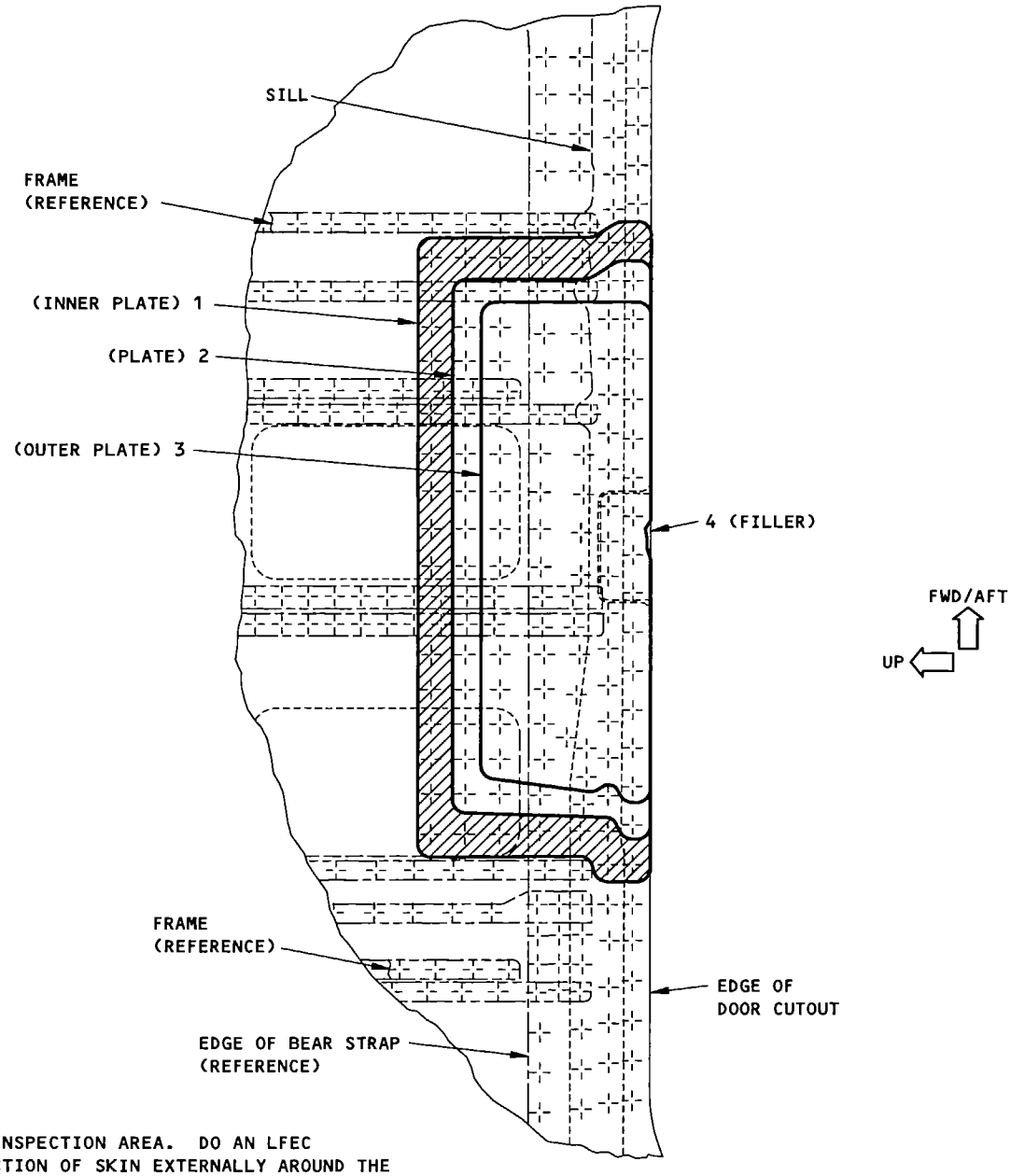

SKIN INSPECTION AREA. DO AN LFEC INSPECTION OF SKIN EXTERNALLY AROUND THE FIRST ROW OF FASTENERS ALONG THE EDGE OF THE PART 1 INNER PLATE.

INSPECTION AREAS FOR ALTERNATIVE II AND V IN TABLE VIII
AT AFT ENTRY AND GALLEY AND FORWARD AND AFT CARGO DOOR CUTOUTS
ROTATED 90° CCW
(TYPICAL)

DETAIL XIV

Skin, Doubler and Bear Strap Repair at Door Cutouts
Figure 46 (Sheet 25)

BOEING PROPRIETARY - Copyright © - Unpublished Work - See title page for details.

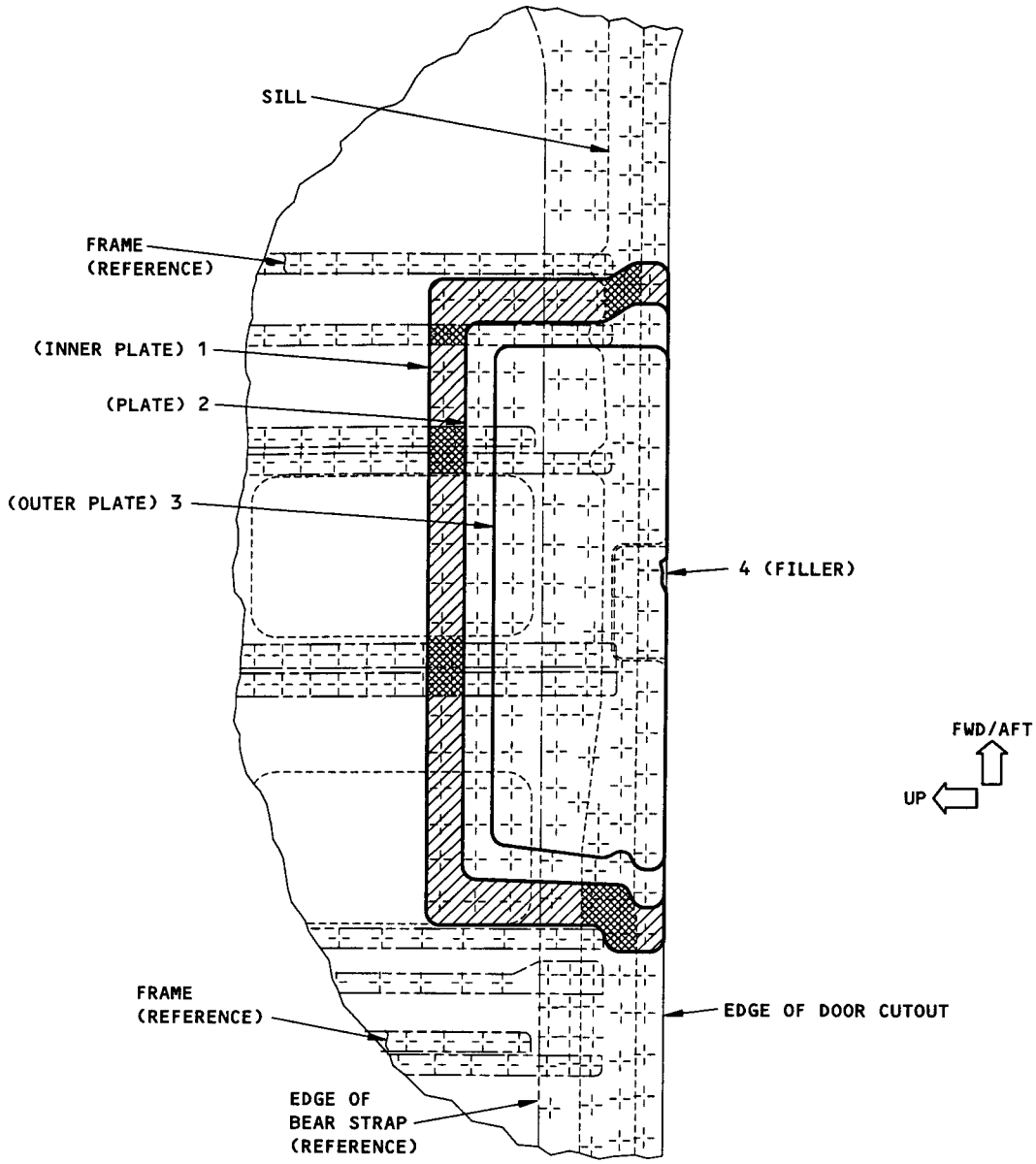

SKIN AND BEAR STRAP INSPECTION AREAS. DO A DETAILED VISUAL INSPECTION OF THE SKIN AND BEAR STRAP INTERNALLY AROUND THE FIRST ROW OF FASTENERS.

GENERAL VISUAL (SURVEILLANCE) INSPECTION AREAS. INSPECT THE SILL OUTER CHORD AND OTHER STRUCTURE INTERNALLY.

INSPECTION AREAS FOR ALTERNATIVE IV
IN TABLE VIII AT FORWARD AND AFT CARGO DOOR CUTOUTS

DETAIL XV

Skin, Doubler and Bear Strap Repair at Door Cutouts
Figure 46 (Sheet 26)

BOEING PROPRIETARY - Copyright © - Unpublished Work - See title page for details.

CATEGORY B REPAIR AND SSI F-10A AND C, F-11A AND C, F16A AND D, F-17A AND D, AND F-18A INSPECTION REQUIREMENTS FOR DETAIL IV

TYPE OF STRUCTURE	INSPECTION THRESHOLD	ALTERNATIVE		REPEAT INSPECTION ALTERNATIVES		
				METHOD	INTERVAL	REFERENCES
FORWARD AND AFT CARGO DOOR CUTOUTS	AC	A	I	MFEC	15,000 FLIGHT CYCLES	737 NDT, PART 6, 53-30-00, FIGURE 6
				GENERAL VISUAL (SURVEILLANCE) INSPECTION		
			II	DETAILED VISUAL INSPECTION	8,000 FLIGHT CYCLES	
				GENERAL VISUAL (SURVEILLANCE)		
			III	LFEC	3,800 FLIGHT CYCLES	737 NDT, PART 6, 53-30-00, FIGURE 5
		B	I	MFEC	25,000 FLIGHT CYCLES	737 NDT, PART 6, 53-30-00, FIGURE 6
			II	LFEC	5,000 FLIGHT CYCLES	737 NDT, PART 6, 53-30-00, FIGURE 5
			III	DETAILED VISUAL INSPECTION	4,500 FLIGHT CYCLES	
AFT ENTRY AND GALLEY DOOR CUTOUTS	AC	C	I	MFEC	24,000 FLIGHT CYCLES	737 NDT, PART 6, 53-30-00, FIGURE 6
				GENERAL VISUAL (SURVEILLANCE) INSPECTION		
			II	LFEC	4,000 FLIGHT CYCLES	737 NDT, PART 6, 53-30-00, FIGURE 5

NOTE 1: FOR FORWARD AND AFT CARGO DOOR CUTOUTS LOWER CORNERS:
- USE ALTERNATIVE A (I), A (II) OR A (III) FOR INSPECTION OF THE UPPER SKIN, BEAR STRAP, FRAME AND SILL OUTER CHORD IN THE DOOR CORNER AREA. REFER TO DETAILS XVI THRU XVIII AS APPLICABLE FOR THE INSPECTION AREAS.
- USE ALTERNATIVE B (I), B (II) OR B (III) FOR INSPECTION OF THE LOWER SKIN AND BEAR STRAP IN THE LAP SPLICE AREA. REFER TO DETAILS XVI THRU XVIII AS APPLICABLE FOR THE INSPECTION AREAS.

NOTE 2: FOR FORWARD AND AFT CARGO DOOR CUTOUTS UPPER CORNERS:
- USE ALTERNATIVE A (I), A (II) OR A (III) FOR INSPECTION OF THE SKIN, BEAR STRAP, FRAME AND SILL OUTER CHORD. REFER TO DETAILS XIX THRU XXI AS APPLICABLE FOR TYPICAL INSPECTION AREAS.

NOTE 3: FOR AFT ENTRY AND GALLEY DOOR CUTOUTS CORNERS:
- USE ALTERNATIVE C (I) OR C (II) FOR INSPECTION OF THE SKIN, BEAR STRAP, FRAME AND SILL OUTER CHORD. REFER TO DETAILS XIX THRU XXI AS APPLICABLE FOR TYPICAL INSPECTION AREAS.

TABLE IX

Skin, Doubler and Bear Strap Repair at Door Cutouts
Figure 46 (Sheet 27)

BOEING PROPRIETARY - Copyright © - Unpublished Work - See title page for details.

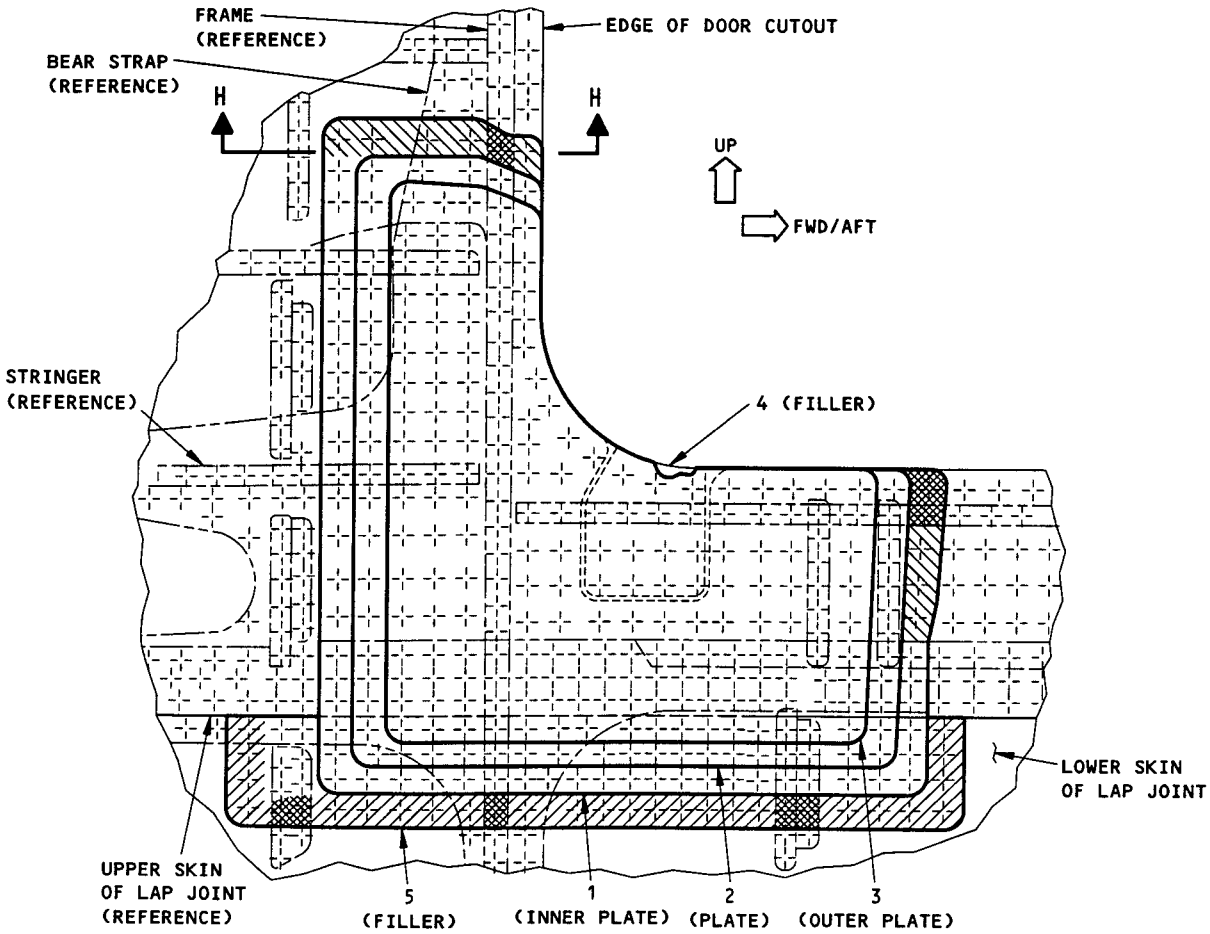

FOR ALTERNATIVE A (I) UPPER SKIN AND BEAR STRAP INSPECTION AREAS. DO AN MFEC INSPECTION OF THE SKIN AND BEAR STRAP INTERNALLY AROUND THE FIRST ROW OF FASTENERS ALONG THE EDGE OF THE PART 1 INNER PLATE.

FOR ALTERNATIVE A (I) GENERAL VISUAL (SURVEILLANCE) INSPECTION AREAS. INSPECT THE FRAMES AND SILL OUTER CHORD INTERNALLY.

FOR ALTERNATIVE B (I) LOWER SKIN AND BEAR STRAP INSPECTION AREAS. DO AN MFEC INSPECTION OF THE SKIN AND BEAR STRAP INTERNALLY AROUND THE FIRST ROW OF FASTENERS ALONG THE EDGE OF THE PART 5 FILLER.

INSPECTION AREAS FOR ALTERNATIVE A (I) AND B (I) IN TABLE IX AT FORWARD AND AFT CARGO DOOR CUTOUTS LOWER CORNERS

DETAIL XVI

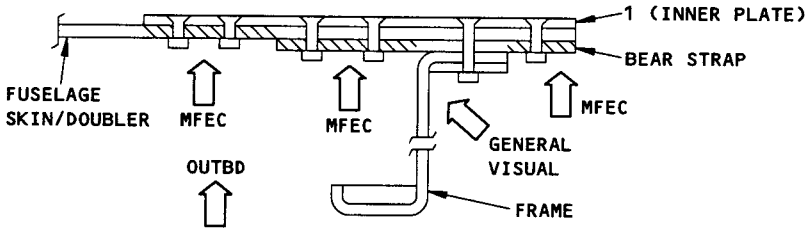

SECTION H-H

Skin, Doubler and Bear Strap Repair at Door Cutouts
Figure 46 (Sheet 28)

BOEING PROPRIETARY - Copyright © - Unpublished Work - See title page for details.

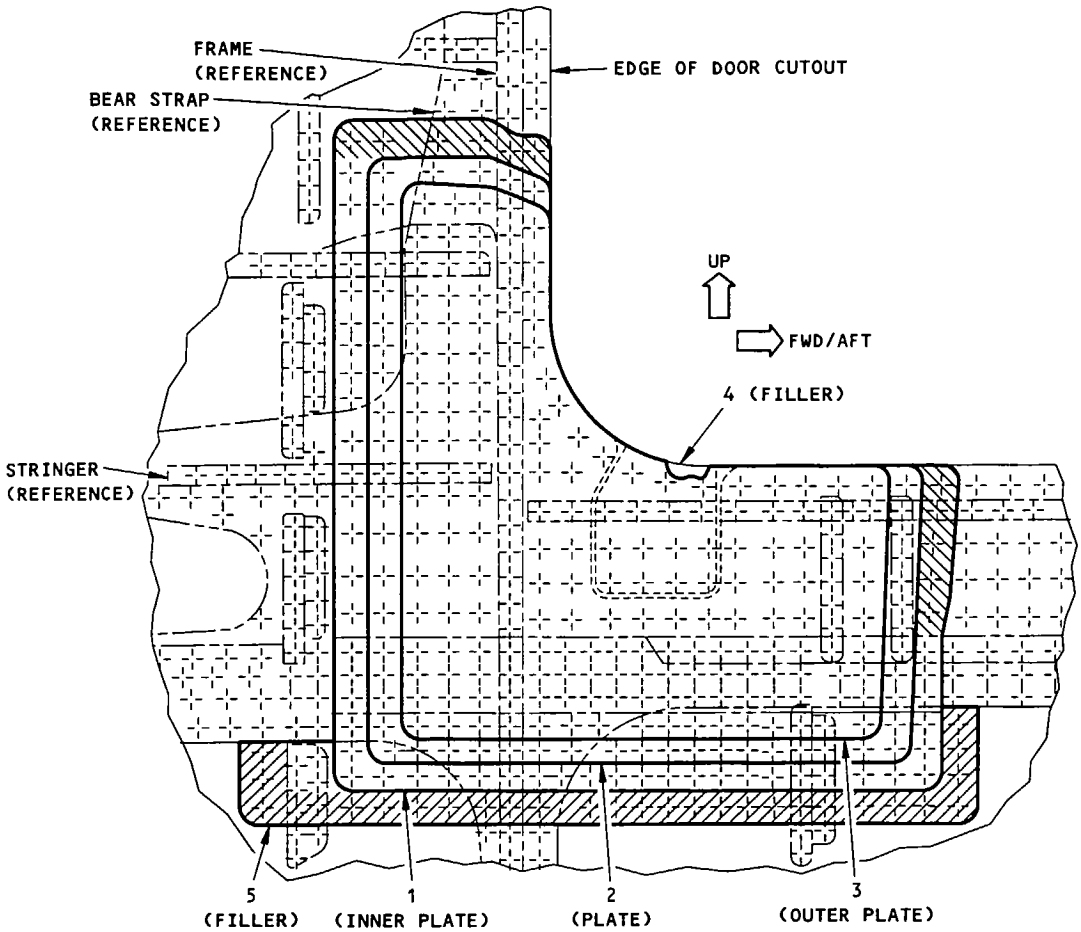

FOR ALTERNATIVE B (II) LOWER SKIN INSPECTION AREAS. DO AN LFEC INSPECTION OF THE SKIN EXTERNALLY AROUND THE FIRST ROW OF FASTENERS ALONG THE PART 5 FILLER.

FOR ALTERNATIVE A (III) UPPER SKIN AND BEAR STRAP INSPECTION AREAS. DO AN LFEC INSPECTION OF THE SKIN AND BEAR STRAP EXTERNALLY AROUND THE FIRST ROW OF FASTENERS ALONG THE PART 1 INNER PLATE.

INSPECTION AREAS FOR ALTERNATIVE A (III) AND B (II) IN TABLE IX AT FORWARD AND AFT CARGO DOOR CUTOUTS LOWER CORNERS

DETAIL XVII

Skin, Doubler and Bear Strap Repair at Door Cutouts
Figure 46 (Sheet 29)

BOEING PROPRIETARY - Copyright © - Unpublished Work - See title page for details.

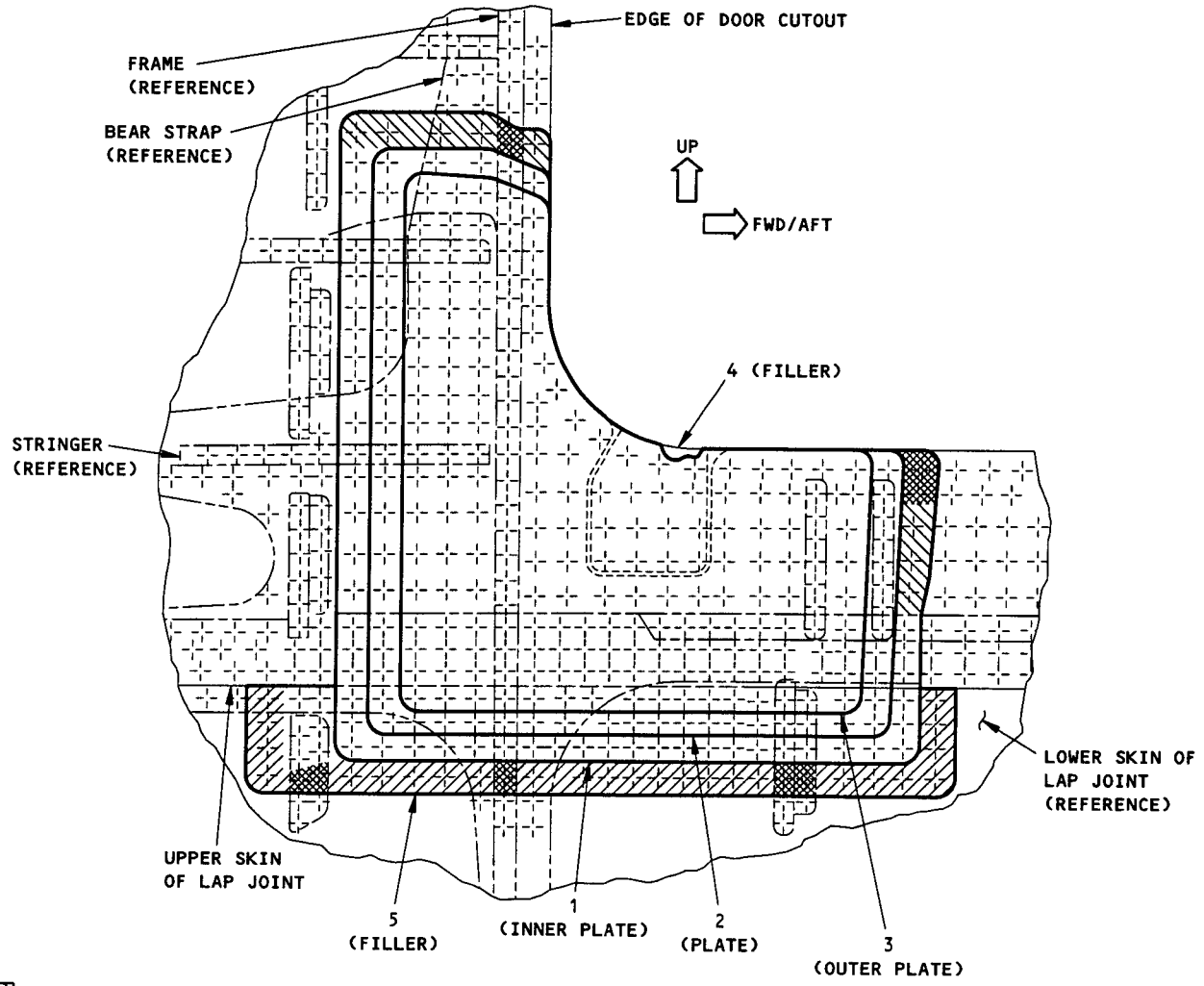

FOR ALTERNATIVE A (II) UPPER SKIN AND BEAR STRAP INSPECTION AREAS. DO A DETAILED VISUAL INSPECTION OF THE SKIN AND BEAR STRAP INTERNALLY.

FOR ALTERNATIVE B (III) LOWER SKIN AND BEAR STRAP INSPECTION AREAS. DO A DETAILED VISUAL INSPECTION OF THE SKIN AND BEAR STRAP INTERNALLY.

FOR ALTERNATIVE A (II) GENERAL VISUAL (SURVEILLANCE) INSPECTION AREAS. INSPECT THE FRAME AND SILL OUTER CHORD INTERNALLY.

INSPECTION AREAS FOR ALTERNATIVE A (II) AND B (III) IN TABLE IX AT FORWARD AND AFT CARGO DOOR CUTOUTS LOWER CORNERS

DETAIL XVIII

Skin, Doubler and Bear Strap Repair at Door Cutouts
Figure 46 (Sheet 30)

L49895

BOEING PROPRIETARY - Copyright © - Unpublished Work - See title page for details.

CATEGORY B REPAIR AND SSI F-10A AND C, F-11A AND C, F-16A AND D, F-17A AND D, AND F-18A INSPECTION REQUIREMENTS FOR DETAIL V					
TYPE OF STRUCTURE	INSPECTION THRESHOLD	ALTERNATIVE	REPEAT INSPECTION ALTERNATIVES		
			METHOD	INTERVAL	REFERENCES
AFT ENTRY AND GALLEY DOOR CUTOUTS	AC	I	MFEC	24,000 FLIGHT CYCLES	737 NDT, PART 6, 53-30-00, FIGURE 6
			GENERAL VISUAL (SURVEILLANCE) INSPECTION		
		II	LFEC	4,000 FLIGHT CYCLES	737 NDT, PART 6, 53-30-00, FIGURE 5
FWD AND AFT CARGO DOOR CUTOUTS	AC	III	MFEC	15,000 FLIGHT CYCLES	737 NDT, PART 6, 53-30-00, FIGURE 6
			GENERAL VISUAL (SURVEILLANCE) INSPECTION		
		IV	DETAILED VISUAL INSPECTION	8,000 FLIGHT CYCLES	
			GENERAL VISUAL (SURVEILLANCE) INSPECTION		
		V	LFEC	3,800 FLIGHT CYCLES	737 NDT, PART 6, 53-30-00, FIGURE 5
NOTE: ALTERNATIVE I AND III: REFER TO DETAIL XIX FOR INSPECTION AREAS. ALTERNATIVE II AND V: REFER TO DETAIL XX FOR INSPECTION AREAS. ALTERNATIVE IV: REFER TO DETAIL XXI FOR INSPECTION AREAS.					

TABLE X

Skin, Doubler and Bear Strap Repair at Door Cutouts
Figure 46 (Sheet 31)

BOEING PROPRIETARY - Copyright © - Unpublished Work - See title page for details.

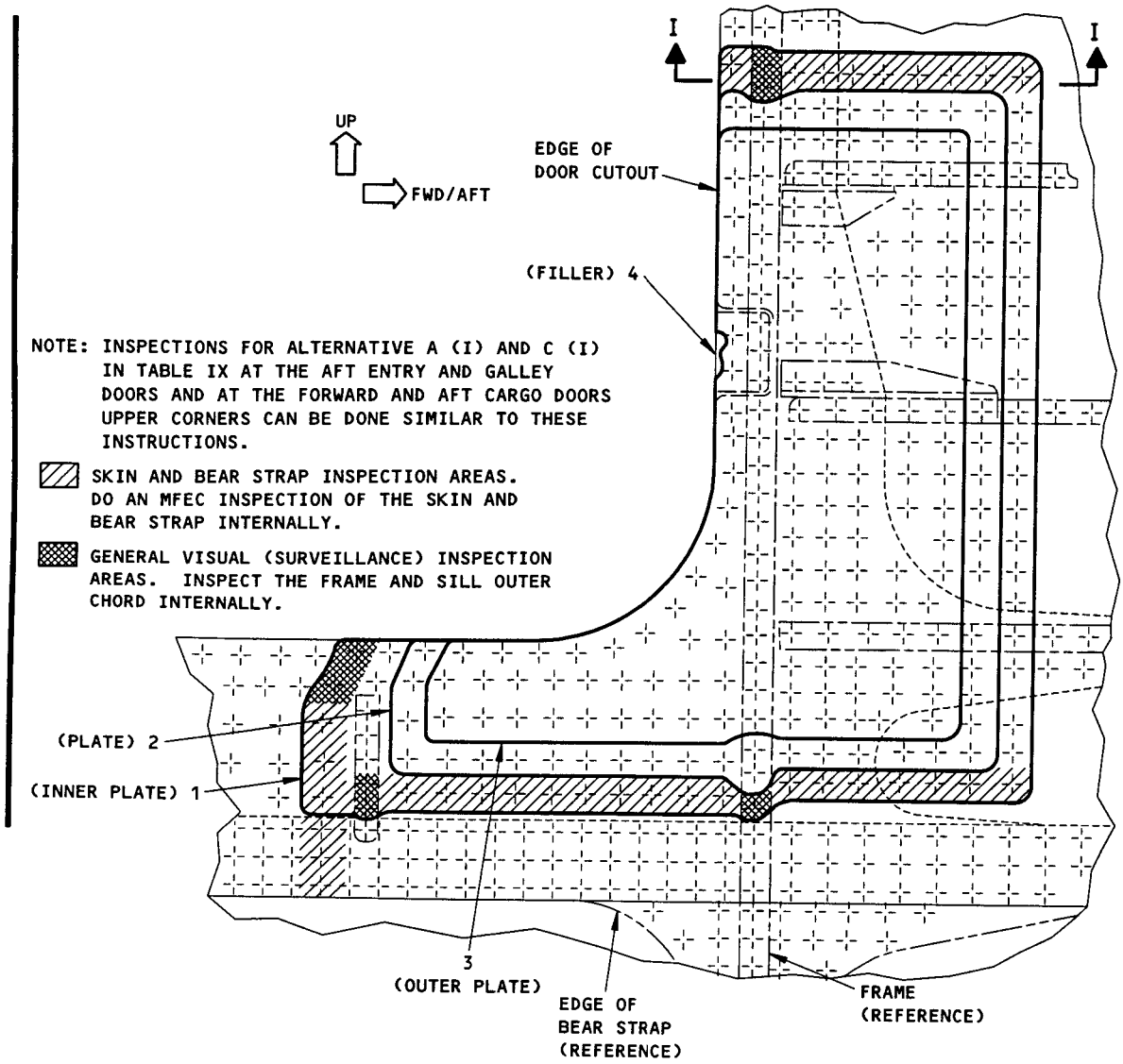

INSPECTION AREAS FOR ALTERNATIVE I AND III IN TABLE X
AT AFT ENTRY AND GALLEY, AND FORWARD AND AFT CARGO DOOR CUTOUTS

DETAIL XIX

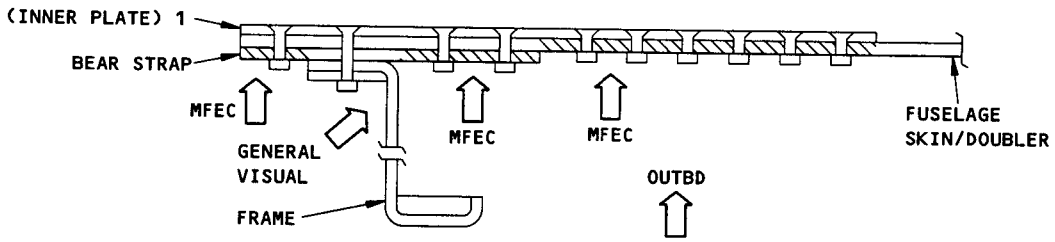

SECTION I-I

Skin, Doubler and Bear Strap Repair at Door Cutouts
Figure 46 (Sheet 32)

BOEING PROPRIETARY - Copyright © - Unpublished Work - See title page for details.

NOTE: INSPECTIONS FOR ALTERNATIVE A (III) AND C (II) IN TABLE IX AT THE AFT ENTRY AND GALLEY DOORS AND AT THE FORWARD AND AFT CARGO DOOR UPPER CORNERS CAN BE DONE SIMILAR TO THIS INSPECTION.

SKIN INSPECTION AREAS. DO AN LFEC INSPECTION OF THE SKIN AND BEAR STRAP EXTERNALLY AROUND THE FIRST ROW OF FASTENERS ALONG THE EDGE OF THE PART 1 INNER PLATE.

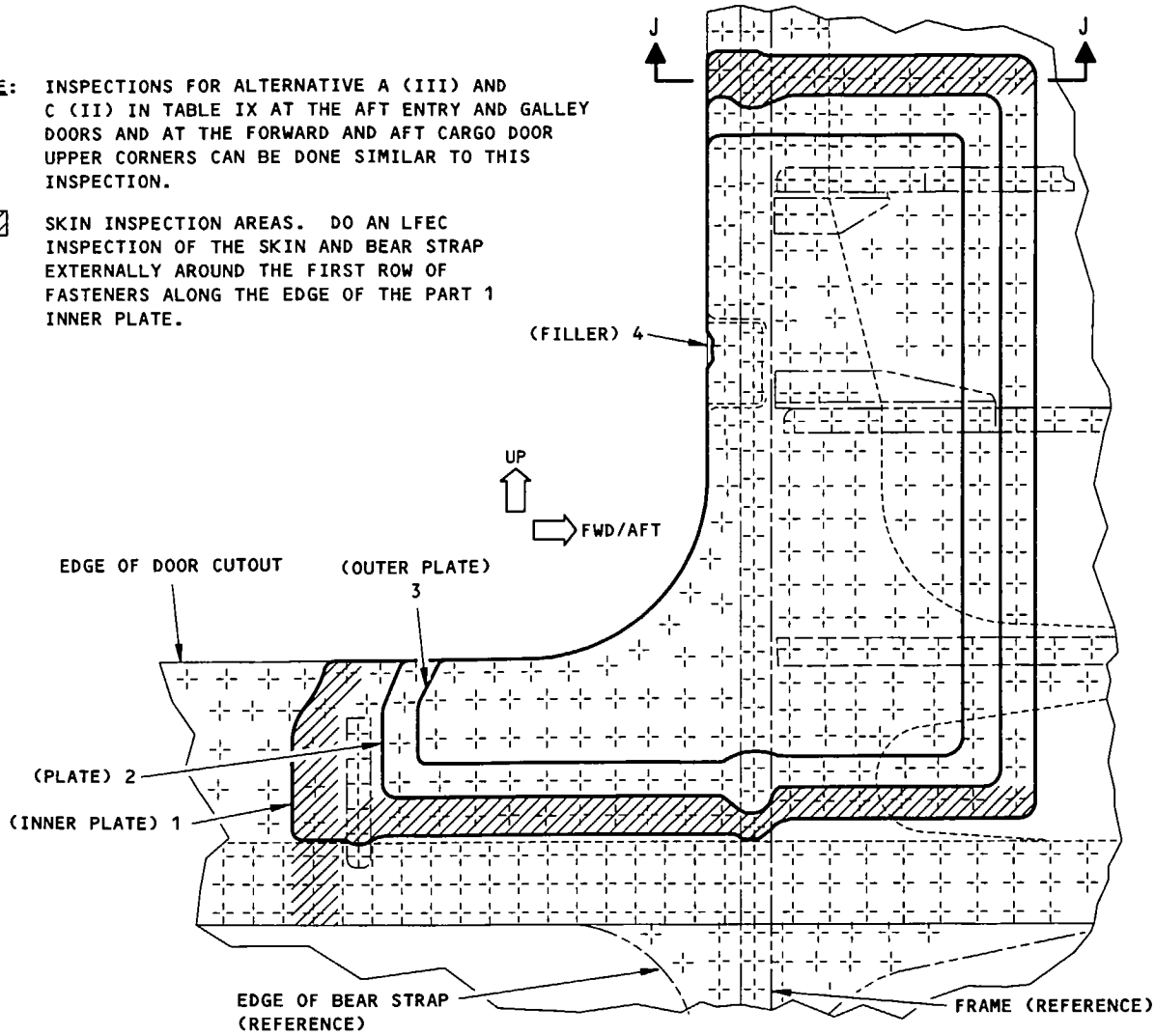

INSPECTION AREAS FOR ALTERNATIVE II AND V IN TABLE X AT AFT ENTRY AND GALLEY, AND FORWARD AND AFT CARGO DOOR CUTOUTS

DETAIL XX

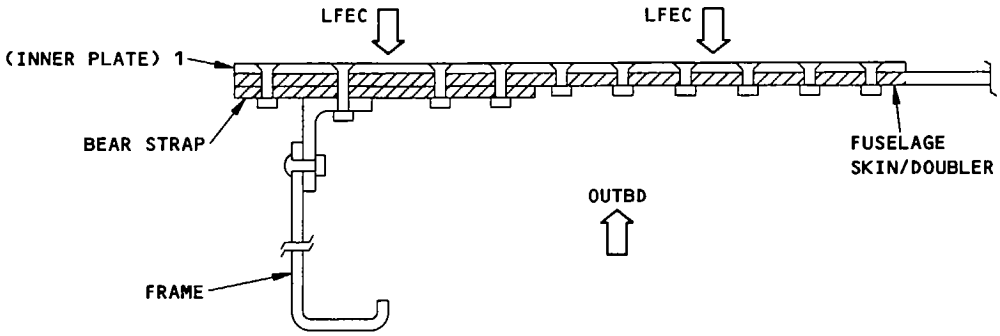

SECTION J-J

Skin, Doubler and Bear Strap Repair at Door Cutouts
Figure 46 (Sheet 33)

BOEING PROPRIETARY - Copyright © - Unpublished Work - See title page for details.

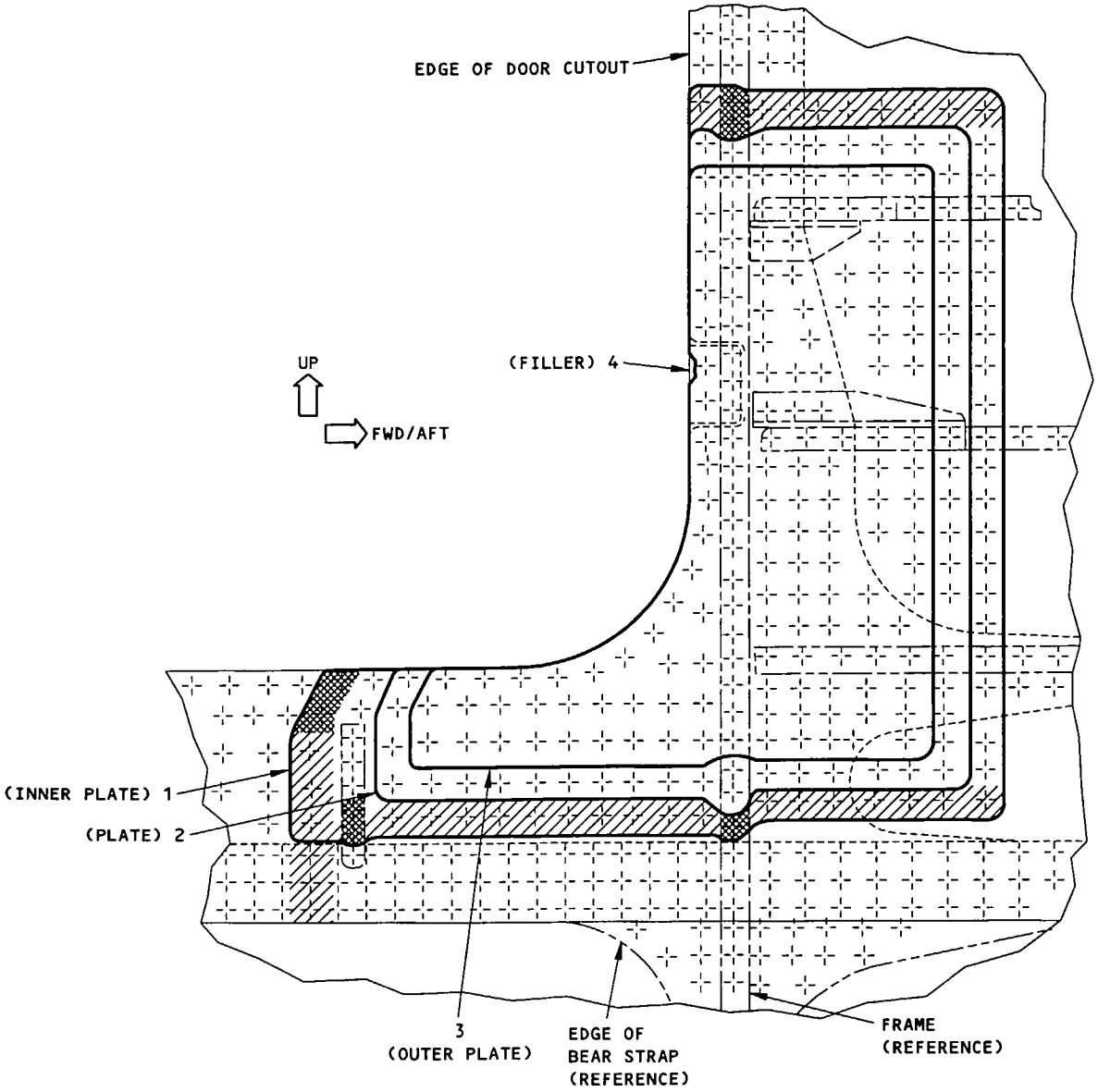

NOTE: INSPECTIONS FOR ALTERNATIVE A (II) IN TABLE IX AT FORWARD AND AFT CARGO DOORS UPPER CORNERS CAN BE DONE SIMILAR TO THESE INSPECTIONS.

SKIN AND BEAR STRAP INSPECTION AREAS. DO A DETAILED VISUAL INSPECTION OF THE SKIN AND BEAR STRAP INTERNALLY.

GENERAL VISUAL (SURVEILLANCE) INSPECTION AREAS. INSPECT THE FRAME AND SILL OUTER CHORD INTERNALLY.

INSPECTION AREAS FOR ALTERNATIVE IV IN TABLE X
AT FORWARD AND AFT CARGO DOOR CUTOUTS

DETAIL XXI

Skin, Doubler and Bear Strap Repair at Door Cutouts
Figure 46 (Sheet 34)

BOEING PROPRIETARY - Copyright © - Unpublished Work - See title page for details.

CATEGORY B REPAIR AND SSI F-10A AND C INSPECTION REQUIREMENTS FOR DETAIL VI						
TYPE OF STRUCTURE	INSPECTION THRESHOLD	ALTERNATIVE		REPEAT INSPECTION ALTERNATIVES		
				METHOD	INTERVAL	REFERENCES
FWD CARGO DOOR CUTOUT	AC	A	I	MFEC	15,000 FLIGHT CYCLES	737 NDT, PART 6, 53-30-00, FIGURE 6
				GENERAL VISUAL (SURVEILLANCE) INSPECTION		
			II	DETAILED VISUAL INSPECTION	8,000 FLIGHT CYCLES	
				GENERAL VISUAL (SURVEILLANCE) INSPECTION		
			III	LFEC	3,800 FLIGHT CYCLES	737 NDT, PART 6, 53-30-00, FIGURE 5
		B	I	MFEC	25,000 FLIGHT CYCLES	737 NDT, PART 6, 53-30-00, FIGURE 6
			II	LFEC	5,000 FLIGHT CYCLES	737 NDT, PART 6, 53-30-00, FIGURE 5
			III	DETAILED VISUAL INSPECTION	4,500 FLIGHT CYCLES	

NOTE: 1 - USE ALTERNATIVE A (I), A (II) OR A (III) FOR INSPECTION OF THE BEAR STRAP, FRAME AND SILL OUTER CHORD IN THE DOOR CORNER AREA. REFER TO DETAILS XXII THROUGH XXIV AS APPLICABLE FOR THE INSPECTION AREAS.

2 - USE ALTERNATIVE B (I), B (II) OR B (III) FOR INSPECTION OF THE SKIN IN THE VICINITY OF THE STATIC PORT AREA. REFER TO DETAILS XXII THROUGH XXIV AS APPLICABLE FOR THE INSPECTION AREAS.

TABLE XI

Skin, Doubler and Bear Strap Repair at Door Cutouts
Figure 46 (Sheet 35)

BOEING PROPRIETARY - Copyright © - Unpublished Work - See title page for details.

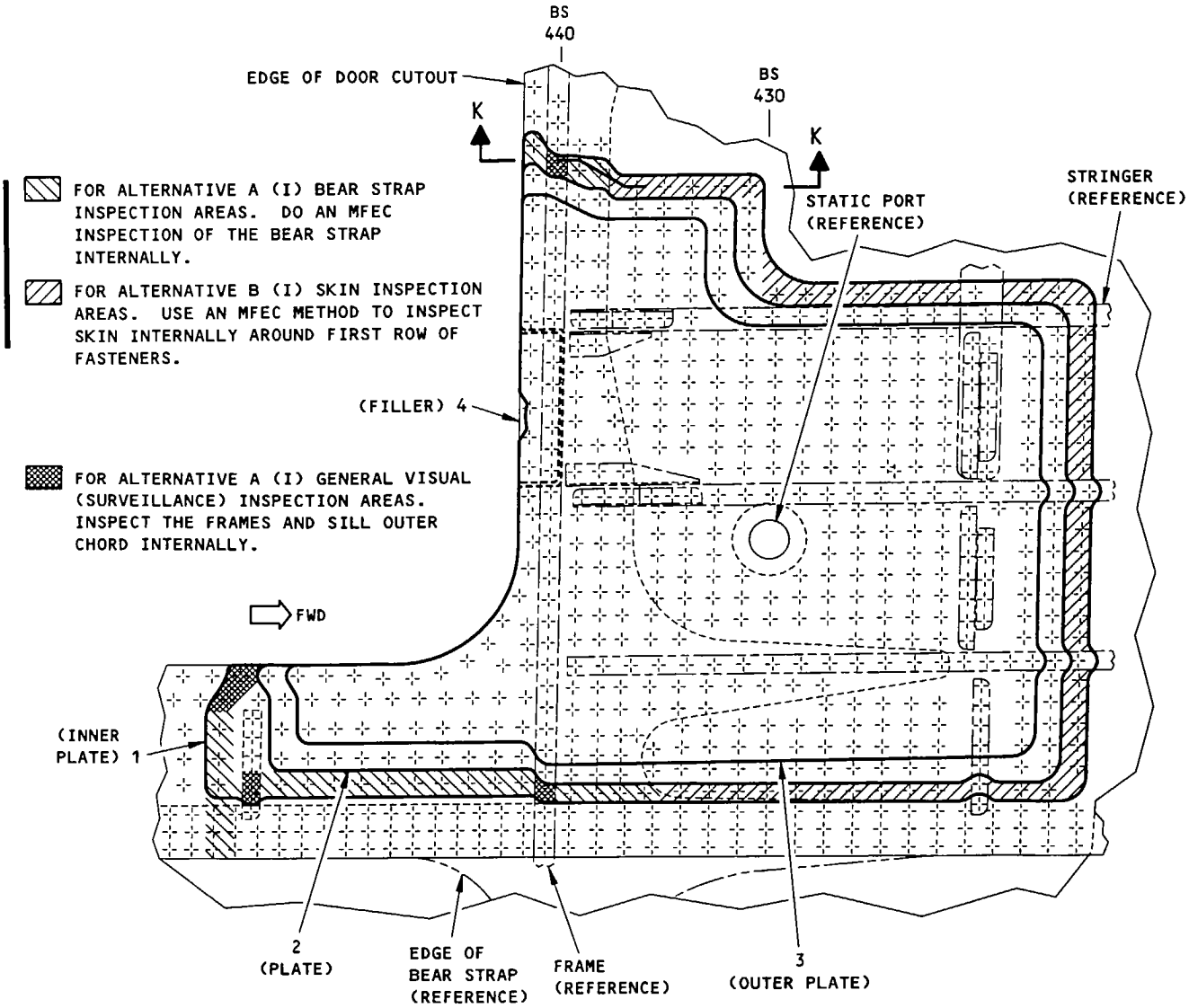

INSPECTION AREAS FOR ALTERNATIVE A (I) AND B (I) IN TABLE XI AT FORWARD CARGO DOOR CUTOUT

DETAIL XXII

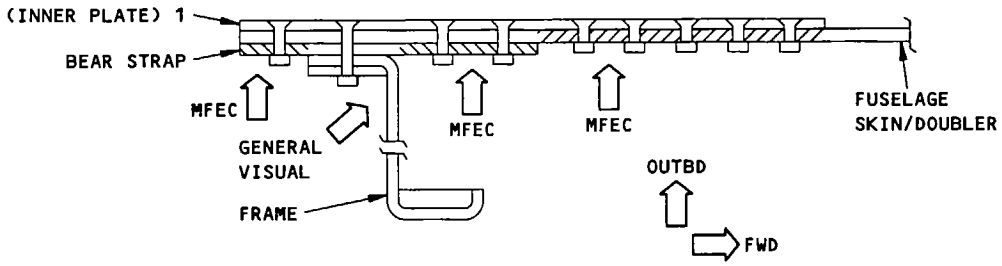

SECTION K-K

Skin, Doubler and Bear Strap Repair at Door Cutouts
Figure 46 (Sheet 36)

BOEING PROPRIETARY - Copyright © - Unpublished Work - See title page for details.

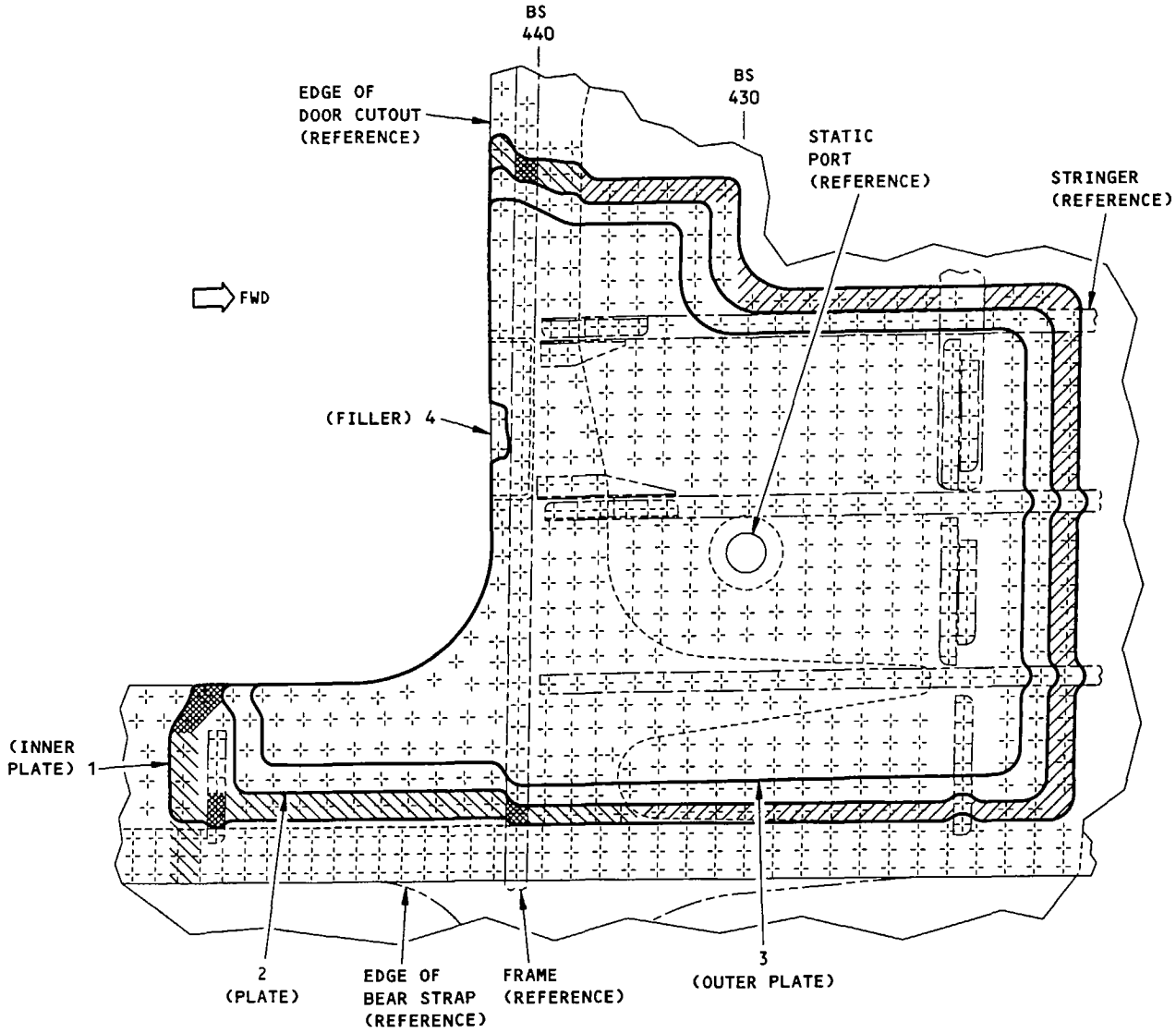

FOR ALTERNATIVE A (II) BEAR STRAP INSPECTION AREAS. DO A DETAILED VISUAL INSPECTION OF THE BEAR STRAP INTERNALLY AROUND THE FIRST ROW OF FASTENERS ALONG THE EDGE OF PART 1 INNER PLATE.

FOR ALTERNATIVE B (III) SKIN INSPECTION AREAS. USE A DETAILED VISUAL METHOD TO INSPECT SKIN INTERNALLY AROUND FIRST ROW OF FASTENERS.

FOR ALTERNATIVE A (II) GENERAL VISUAL (SURVEILLANCE) INSPECTION AREAS. INSPECT THE FRAME AND SILL OUTER CHORD INTERNALLY.

INSPECTION AREAS FOR ALTERNATIVE A (II) AND B (III) IN TABLE XI AT FORWARD CARGO DOOR CUTOUT

DETAIL XXIII

Skin, Doubler and Bear Strap Repair at Door Cutouts
Figure 46 (Sheet 37)

BOEING PROPRIETARY - Copyright © - Unpublished Work - See title page for details.

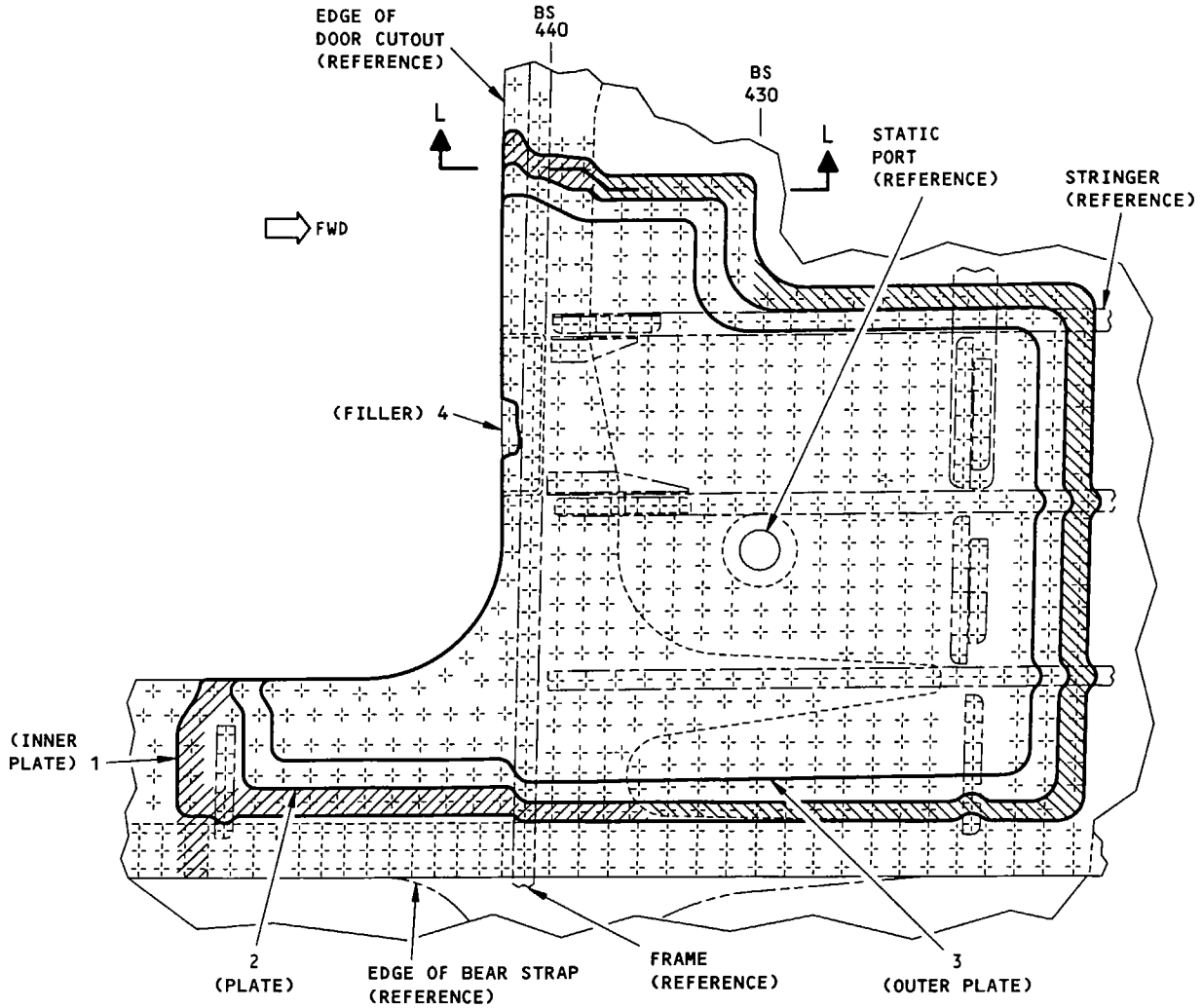

FOR ALTERNATIVE A (III) BEAR STRAP INSPECTION AREAS. USE AN LFEC METHOD TO INSPECT THE BEAR STRAP EXTERNALLY AROUND FIRST ROW OF FASTENERS.

FOR ALTERNATIVE B (II) SKIN INSPECTION AREAS. USE AN LFEC METHOD TO INSPECT THE SKIN EXTERNALLY AROUND FIRST ROW OF FASTENERS ALONG THE EDGE OF PART 1 INNER PLATE.

INSPECTION AREAS FOR ALTERNATIVE A (III), AND B (II) IN TABLE XI
AT FORWARD CARGO DOOR CUTOUT

DETAIL XXIV

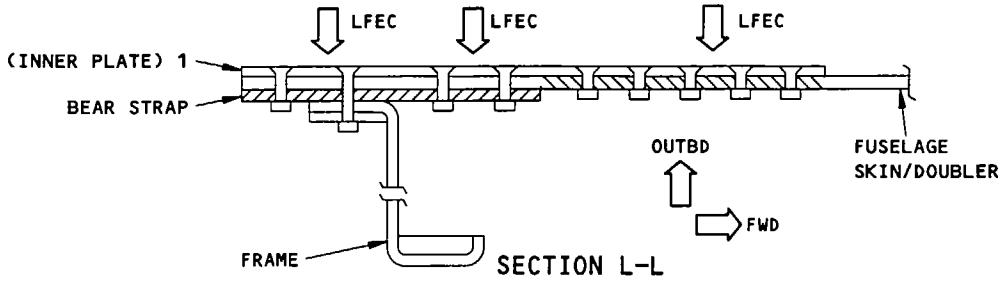

Skin, Doubler and Bear Strap Repair at Door Cutouts
Figure 46 (Sheet 38)

BOEING PROPRIETARY - Copyright © - Unpublished Work - See title page for details.

CATEGORY B REPAIR AND SSI F-10A AND C, F-11A AND C, F-16A AND D, F-17A AND D, AND F-18A INSPECTION REQUIREMENTS FOR DETAIL X					
TYPE OF STRUCTURE	INSPECTION THRESHOLD	ALTERNATIVE	REPEAT INSPECTION ALTERNATIVES		
			METHOD	INTERVAL	REFERENCES
AFT ENTRY AND GALLEY DOOR CUTOUT FORWARD EDGES	AC	I	DETAILED VISUAL	4,000 FLIGHT CYCLES	
			MEDIUM FREQUENCY EDDY CURRENT (MFEC)	24,000 FLIGHT CYCLES	737 NDT, PART 6, 53-30-00, FIGURE 6
			GENERAL VISUAL (SURVEILLANCE)		
		II	DETAILED VISUAL	4,000 FLIGHT CYCLES	
			LOW FREQUENCY EDDY CURRENT (LFEC)		737 NDT, PART 6, 53-30-00, FIGURE 5
AFT ENTRY AND GALLEY DOOR CUTOUT AFT EDGES	AC	III	DETAILED VISUAL	4,000 FLIGHT CYCLES	
			MEDIUM FREQUENCY EDDY CURRENT (MFEC)	24,000 FLIGHT CYCLES	737 NDT, PART 6, 53-30-00, FIGURE 6
			GENERAL VISUAL (SURVEILLANCE)		
		IV	DETAILED VISUAL	4,000 FLIGHT CYCLES	
			LOW FREQUENCY EDDY CURRENT (LFEC)	19,000 FLIGHT CYCLES	737 NDT, PART 6, 53-30-00, FIGURE 5
FORWARD AND AFT CARGO DOOR CUTOUT FORWARD AND AFT EDGES	AC	V	DETAILED VISUAL	4,000 FLIGHT CYCLES	
			MEDIUM FREQUENCY EDDY CURRENT (MFEC)	15,000 FLIGHT CYCLES	737 NDT, PART 6, 53-30-00, FIGURE 6
			GENERAL VISUAL (SURVEILLANCE)		
		VI	DETAILED VISUAL	4,000 FLIGHT CYCLES	
			LOW FREQUENCY EDDY CURRENT (LFEC)	3,800 FLIGHT CYCLES	737 NDT, PART 6, 53-30-00, FIGURE 5
NOTE: ALTERNATIVE I, III AND V: REFER TO DETAIL XXV FOR INSPECTION AREAS. ALTERNATIVE II, IV AND VI: REFER TO DETAIL XXVI FOR INSPECTION AREAS.					

TABLE XII

Skin, Doubler and Bear Strap Repair at Door Cutouts
Figure 46 (Sheet 39)

BOEING PROPRIETARY - Copyright © - Unpublished Work - See title page for details.

UPPER AND LOWER SKIN INSPECTION AREAS. DO A DETAILED VISUAL INSPECTION OF THE SKIN EXTERNALLY ALONG THE EDGE OF THE PART 1 INNER PLATE AND PART 5 FILLER.

UPPER AND LOWER SKIN AND BEARSTRAP INSPECTION AREAS. DO AN MFEC INSPECTION OF THE SKIN AND BEARSTRAP INTERNALLY AROUND THE FIRST ROW OF FASTENERS.

GENERAL VISUAL (SURVEILLANCE) INSPECTION AREA. INSPECT THE FRAME OUTBOARD CHORD AND WEB INTERNALLY.

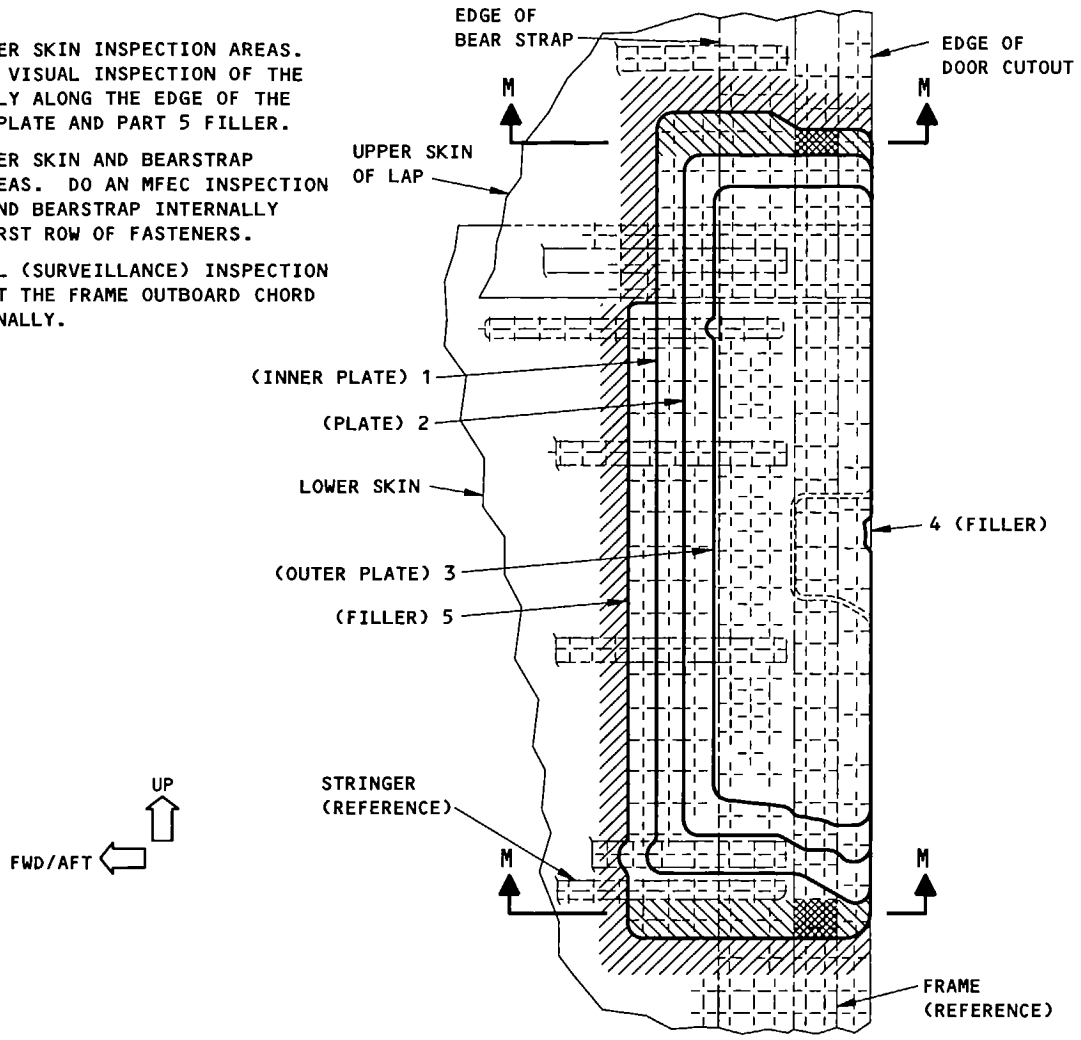

INSPECTION AREAS FOR ALTERNATIVE I, III OR V IN TABLE XII AT AFT ENTRY, GALLEY, AND FORWARD AND AFT CARGO DOOR CUTOUTS

DETAIL XXV

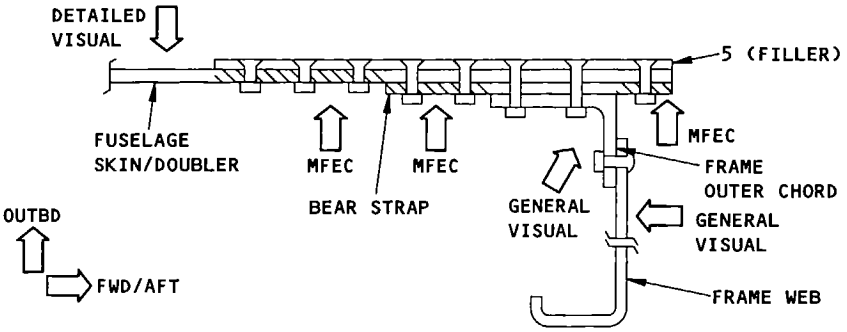

SECTION M-M

Skin, Doubler and Bear Strap Repair at Door Cutouts
Figure 46 (Sheet 40)

BOEING PROPRIETARY - Copyright © - Unpublished Work - See title page for details.

UPPER AND LOWER SKIN INSPECTION AREAS. DO A DETAILED VISUAL INSPECTION OF THE SKIN EXTERNALLY ALONG THE EDGE OF THE PART 1 INNER PLATE AND PART 5 FILLER.

UPPER AND LOWER SKIN AND BEARSTRAP INSPECTION AREAS. DO AN LFEC INSPECTION OF THE SKIN AND BEARSTRAP EXTERNALLY AROUND THE FIRST ROW OF FASTNERS.

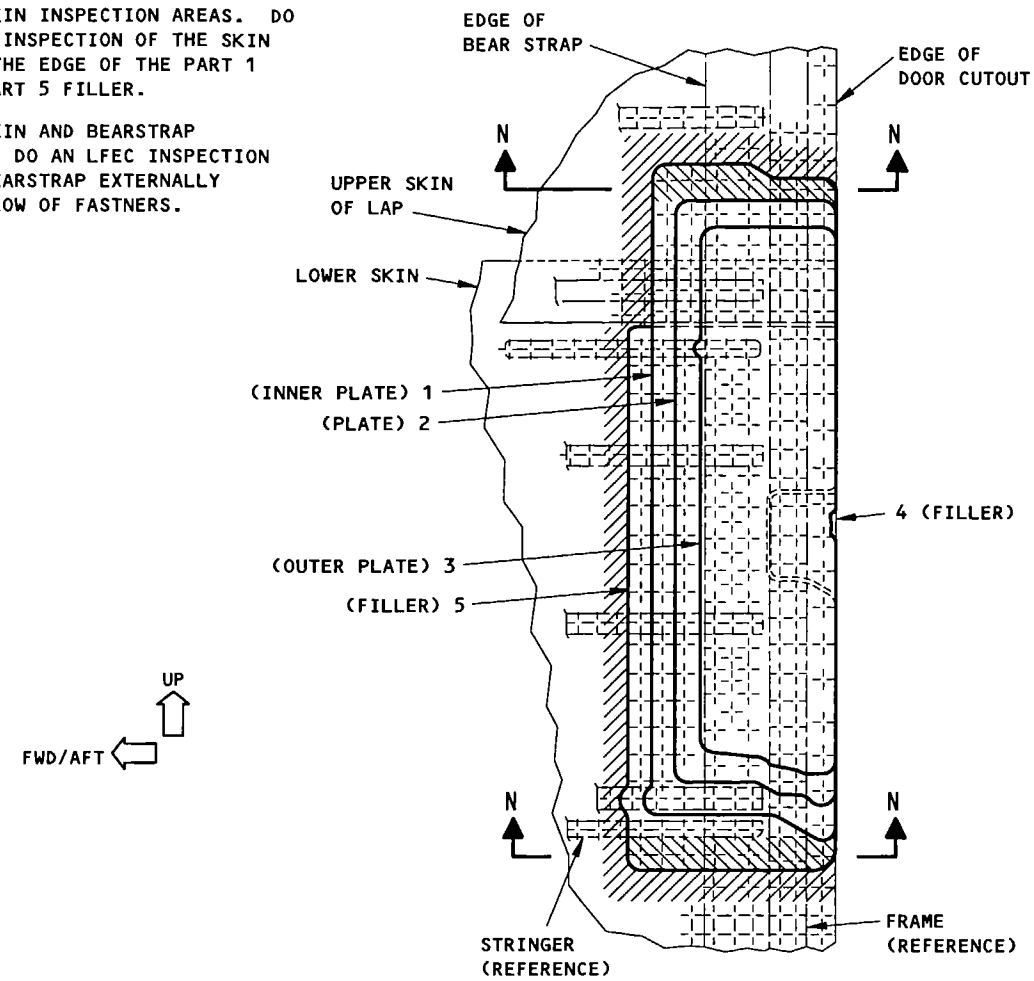

INSPECTION AREAS FOR ALTERNATIVE II, IV OR VI IN TABLE XII AT AFT ENTRY, GALLEY, AND FORWARD AND AFT CARGO DOOR CUTOUTS
DETAIL XXVI

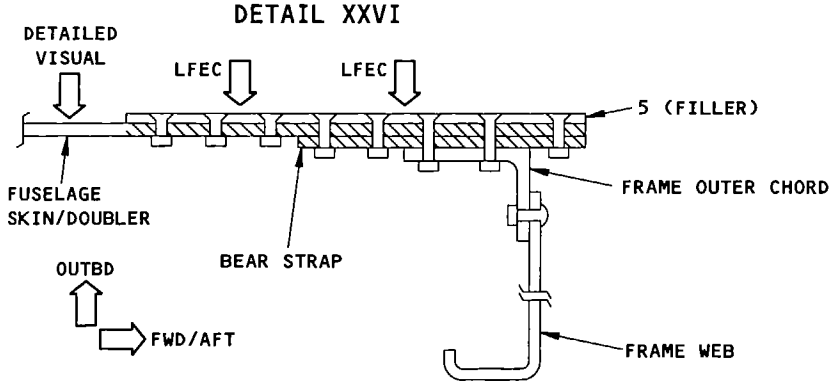

SECTION THROUGH PART 5 FILLER IS SHOWN,
SECTION THROUGH PART 1 INNER PLATE IS ALMOST THE SAME

SECTION N-N

Skin, Doubler and Bear Strap Repair at Door Cutouts
Figure 46 (Sheet 41)

BOEING PROPRIETARY - Copyright © - Unpublished Work - See title page for details.

SSI NUMBER F-16C AND F-17C INSPECTION REQUIREMENTS			
INSPECTION THRESHOLD	REPEAT INSPECTION		
	METHOD	INTERVAL	REFERENCE
66,000 FLIGHT CYCLES AFTER AIRPLANE DELIVERY AF	HIGH FREQUENCY EDDY CURRENT (HFEC)	24,000 FLIGHT CYCLES	737 NDT, D6-37239, PART 6, 51-00-00, FIG. 4 OR 23
NOTE: INSPECT THE FRAME CHORD WITH HFEC METHOD INTERNALLY IN THE REPAIR AREA AS SHOWN IN DETAIL XXVII.			

TABLE XIII

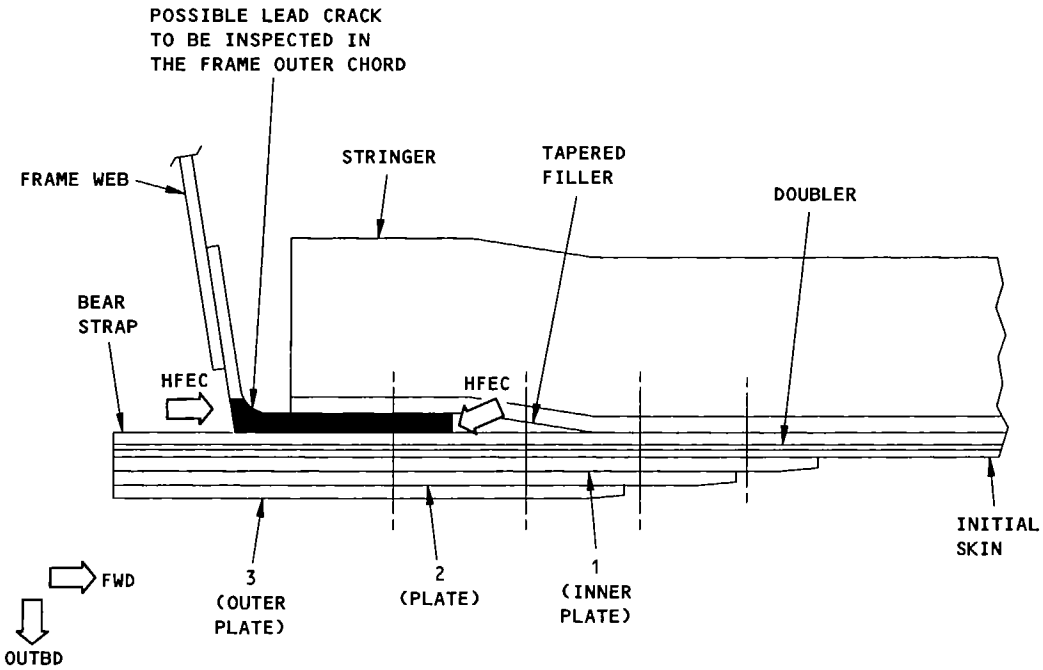

TYPICAL INSPECTION AREA FOR F-16C IS SHOWN, F-17C IS ALMOST THE SAME

DETAIL XXVII

Skin, Doubler and Bear Strap Repair at Door Cutouts
Figure 46 (Sheet 42)

BOEING PROPRIETARY - Copyright © - Unpublished Work - See title page for details.

APPLICABILITY
THIS REPAIR IS APPLICABLE TO AIRPLANE WITH CUM LINE NUMBERS 1 TO 2772.
USE THIS REPAIR FOR CRACKS IN THE SKIN, OR GUSSET AND SKIN. THE MAXIMUM CRACK LENGTH THAT CAN BE REPAIRED IS 1.50 INCHES.

REPAIR INSTRUCTIONS

1. Remove fasteners, windows and equipment to get access to the damaged area.
2. Put a sheet of steel between the steel gusset and the outer skin.
3. Carefully cutout the damaged part of the skin as shown in Detail II.
4. Do a high frequency eddy current (HFEC) inspection of the surface of the gusset area below the skin cutout. Refer to NDT Part 6, 51-00-00, Fig. 24.
5. If there are cracks in the gusset, put a sheet of steel between the steel gusset and the structure. If there are no cracks in the gusset, go to step 8.
6. Carefully cutout the damaged part of the gusset as shown in Detail II.
7. Do a HFEC inspection of the surface of the gusset to make sure the crack is completely removed. If there are no cracks, make the cutout larger by 0.040 inch. Refer to NDT Part 6, 51-00-00, Figure 24.
8. Do a HFEC inspection along the edge of the skin cutout area to make sure there are no cracks. If there are no cracks, make the cutout larger by 0.04 inch. Refer to NDT Part 6, 51-00-00, Fig. 23.
9. Order the repair part 1 (Doubler) from The Boeing Company. Make the repair part 2 (Filler). See Table I and Detail II.
10. Assemble the repair parts. Make sure there is no more than 0.010-inch gap between the skin and the part 1 (Doubler). If the gap is more than 0.010-inch, add a shim to a maximum 0.040-inch thickness.
11. Drill the fastener holes. Refer to SRM 51-40.
12. Disassemble the repair part.
13. Remove the nicks, scratches, gouges, burrs and sharp edges from the repair parts and the initial structure.
14. Apply a chemical conversion coating to the bare surfaces of the initial aluminum structure and the repair parts. Refer to SRM 51-10-2.
15. Apply one layer of BMS 10-11, Type I primer to the bare surfaces of the initial structure and the repair parts. Refer to SOPM 20-41-02.
16. Make and install countersink repair washers at the initial fastener locations in the outer skin. Refer to SRM 51-30-8.
17. Install the repair parts with BMS 5-95 sealant between the mating surfaces. Apply fillet seals and fill all gaps with BMS 5-95 sealant. Refer to SRM 51-20-4.
18. Install the fasteners. Fasteners that are not made of aluminum must be installed wet with BMS 5-95 sealant. Shave the rivet heads flush with the doubler surface for aerodynamic smoothness. Refer to SRM 51-70-2.
19. Touch-up the shaved rivet heads with a chemical coversion coating and apply primer. Refer to SRM 51-10-2.
20. Apply a layer of BMS 3-23, Type 2 corrosion inhibiting compound to the inner face of the repair area. Refer to SRM 51-10-2.
21. Install the windows and equipment that were removed to get access to the repair. Refer to AMM 56-11 for window installation.
22. Apply the finish to the repair area. Refer to AMM 51-21.

NOTES

- THIS IS A CATEGORY A REPAIR. THE INSPECTIONS GIVEN IN THE BASELINE ZONAL INSPECTION (BZI) ARE SUFFICIENT TO MAINTAIN THE DAMAGE TOLERANCE OF THE INITIAL STRUCTURE WITH THIS REPAIR INSTALLED. REFER TO SRM 51-00-6 FOR REPAIR CATEGORIES, BZI DEFINITION AND REPAIR ASSESSMENT PROGRAM DATA.
- THIS REPAIR WILL HAVE AN EFFECT ON THE STRUCTURAL SIGNIFICANT ITEM (SSI) NUMBER F-45B. IN THE AREA OF THE EXTERNAL REPAIR DOUBLER, DO THE INSPECTION SPECIFIED IN SSI F-45B OF THE SUPPLEMENTAL STRUCTURAL INSPECTION DOCUMENT (SSID), EXCEPT REPLACE THE INSPECTION OF THE SKIN WITH AN INSPECTION OF THE REPAIR DOUBLER. PAY PARTICULAR ATTENTION TO THE EDGES OF THE SKIN, DOUBLER AND CHORD IN THE INSPECTION AREA. DO THIS INSPECTION AT THE SUBSEQUENT SSID INSPECTION ON THIS AIRPLANE. REFER TO SRM 51-00-4, FIGURE 3 FOR THE APPLICABLE SSI DATA.
- ALL DIMENSIONS ARE IN INCHES.
- D = DIAMETER OF FASTENER.

Fuselage Skin Crack Repair at Flight Compartment C-D Post, Point C
Figure 47 (Sheet 1)

BOEING PROPRIETARY - Copyright © - Unpublished Work - See title page for details.

NOTES (CONTINUED)

- WHEN YOU USE THIS REPAIR REFER TO:
  - AMM 51-21 FOR PROTECTIVE FINISH
  - AMM 56-11 FOR WINDOW REMOVAL/INSTALLATION
  - NDT 51-00-00, FIG. 23 FOR ALUMINUM PART SURFACE INSPECTION
  - NDT 51-00-00, FIG. 24 FOR STEEL PART SURFACE INSPECTION
  - SOPM 20-41-02 FOR APPLICATION OF CHEMICAL AND SOLVENT RESISTANT FINISHES
  - SRM 51-70-2 FOR AERODYNAMIC SMOOTHNESS REQUIREMENTS
  - SRM 51-10-1 FOR INSPECTION AND REMOVAL OF DAMAGE
  - SRM 51-10-2 FOR PROTECTIVE TREATMENT OF METALLIC AND GRAPHITE MATERIALS
  - SRM 51-20-4 FOR REPAIR SEALING
  - SRM 51-30 FOR FASTENER CODE, INSTALLATION AND REMOVAL, HOLE SIZES, AND EDGE MARGINS
  - SRM 51-30-8 FOR COUNTERSINK REPAIR WASHERS.

[A] IF THE FASTENER HOLES ARE COUNTERSUNK ON BOTH SIDES, IT CAN BE EASIER TO INSTALL THE MANUFACTURED HEAD OF THE RIVET FROM THE INSIDE. ENLARGE THE COUNTERSINKS ON THE INNER SURFACE TO PERMIT THE HEAD OF THE REPAIR FASTENER TO HAVE A CORRECT FIT.

[B] DO NOT CHAMFER THIS EDGE. MAKE SURE THAT THE REPAIR DOUBLER EDGE DOES NOT OVERLAP WITH THE WINDOW.

FASTENER SYMBOLS

- REFERENCE FASTENER LOCATION
- INITIAL FASTENER LOCATION. INSTALL A BACR15CE5D RIVET [A]
- INITIAL FASTENER LOCATION. INSTALL A BACR15CE6D RIVET [A]
- INITIAL FASTENER LOCATION. INSTALL A BACB30LH3K* BOLT
- INITIAL FASTENER LOCATION. INSTALL A BACB30LR4K* BOLT WITH A NAS1149D0463J WASHER AND BACN10YR4CD NUT
- INITIAL FASTENER LOCATION. INSTALL A BACB30FN6K* HEX DRIVE BOLT WITH A BACC30M6 COLLAR

REPAIR MATERIAL			
PART		QTY	MATERIAL
1	DOUBLER	1	BOEING PART NUMBER 69-71947-7/8
2	FILLER	1	2024-T3 CLAD, SAME THICKNESS AS INITIAL SKIN (AND GUSSET IF DAMAGED) THICKNESS

TABLE I

Fuselage Skin Crack Repair at Flight Compartment C-D Post, Point C
Figure 47 (Sheet 2)

BOEING PROPRIETARY - Copyright © - Unpublished Work - See title page for details.

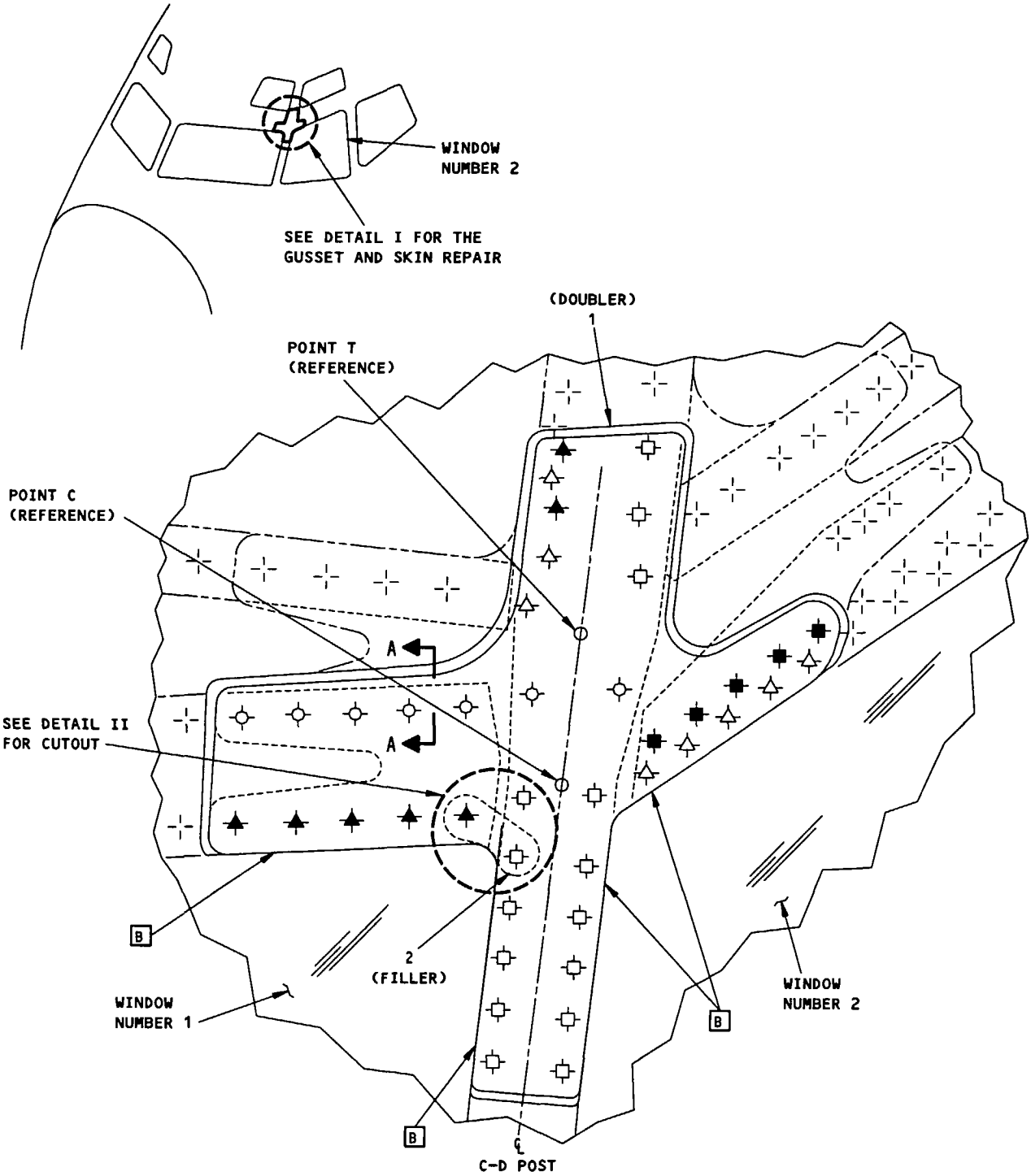

CRACK IN THE SKIN, GUSSET, OR SKIN AND GUSSET
DETAIL I

Fuselage Skin Crack Repair at C-D Window Post, Point C
Figure 47 (Sheet 3)

BOEING PROPRIETARY - Copyright © - Unpublished Work - See title page for details.

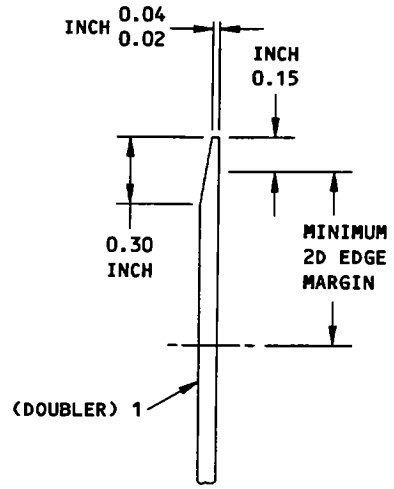

SECTION A-A
(TYPICAL)

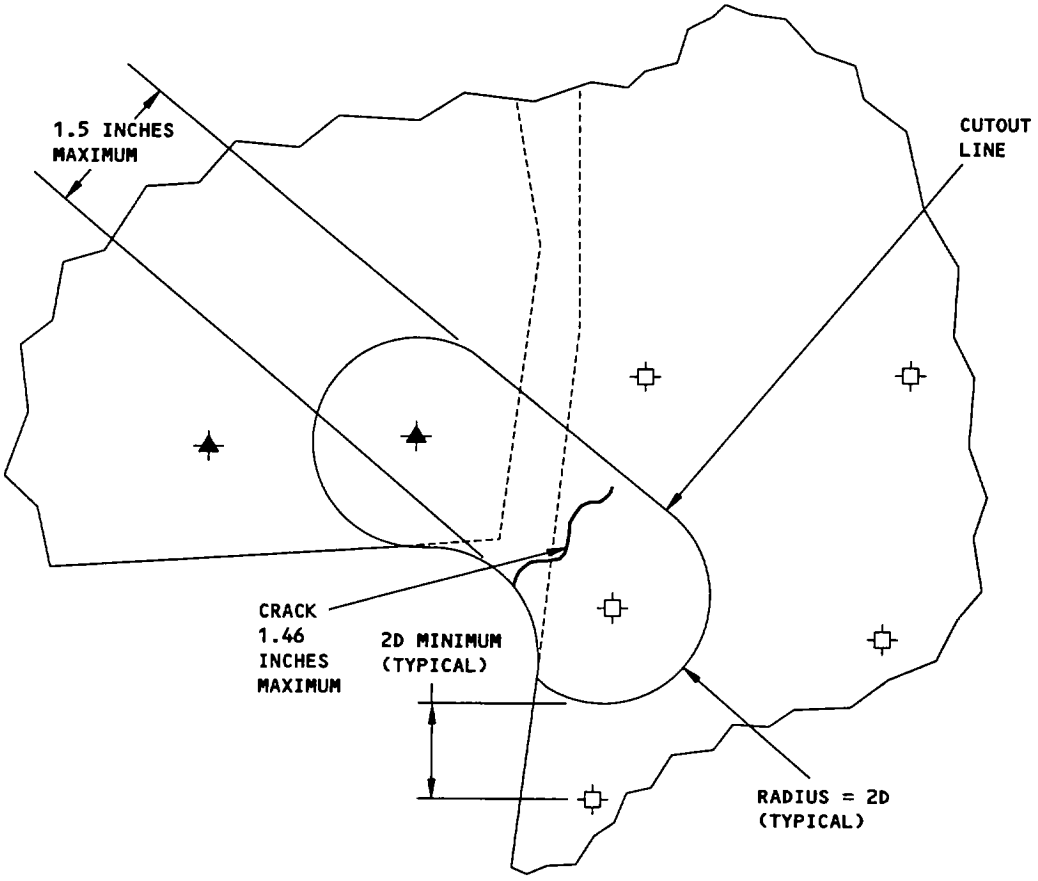

SKIN AND/OR GUSSET CUTOUT
DETAIL II

Fuselage Skin Crack Repair at C-D Window Post, Point C
Figure 47 (Sheet 4)

BOEING PROPRIETARY - Copyright © - Unpublished Work - See title page for details.

APPLICABILITY

THIS REPAIR FIGURE IS APPLICABLE TO FUSELAGE SKINS THAT HAVE DAMAGE AT AREAS SHOWN IN DETAIL I AT THE:

- FUSELAGE SKIN OR
- BONDED DOUBLER (TEAR STRAP), OR
- SKIN AND BONDED DOUBLER (TEAR STRAP)

DO NOT USE THIS REPAIR AT THE SHADED AREAS THAT ARE SHOWN IN DETAIL I AND AT:

- AREAS WITHIN 10 INCHES OF LARGE DOOR CUTOUTS AND WITHIN 3 INCHES OF SMALL CUTOUTS
- ANY SKIN CUTOUT, I.E. ANTENNAS, SERVICE DOORS, ETC.
- SECTIONS 48 AND SECTION 41 FORWARD OF STA. 259.5.
- IN THE AREA OF THE PITOT STATIC PROBES AND PORTS, AND
- IF THE PREVIOUS REPAIR HAS SIDE BY SIDE FASTENERS (NOT STAGGERED) THROUGH THE TEAR STRAPS.

DO NOT USE THIS FIGURE IF:

- THE MAXIMUM SIZE OF A SINGLE, CONTINUOUS REPAIR WILL BE MORE THAN 1600 SQUARE INCHES. CONTACT THE BOEING COMPANY FOR AN AERODYNAMIC ANALYSIS.
- THE SUM OF THE REPAIRS DONE WITH THIS FIGURE, FIGURE 46 AND FIGURE 49 ON THE SAME AIRPLANE IS MORE THAN 32,400 SQUARE INCHES. CONTACT THE BOEING COMPANY.

IF THE SUM OF ALL REPAIRS DONE WITH THIS FIGURE, FIGURE 46 AND FIGURE 49 ON THE SAME AIRPLANE WILL BE MORE THAN 8100 SQUARE INCHES THEN A PERFORMANCE RESTRICTION MUST BE APPLIED. AH

REPAIR INSTRUCTIONS

NOTE: The details shown in this repair figure are general repair procedures. The specific damage size, shape and location can be different for actual repairs. The intent of this repair is to give general guidelines to permit you to design repairs for your specific damage. The dimensions and shape of the repair can be different than what is shown. Refer to the example for repair lay-out steps. To make sure that your repair is structurally satisfactory, always obey the general repair rules as given in the flagnotes.

1. Get access to the damaged area.
2. Determine if a repair is permitted in the damaged area. See Detail I for the restricted areas.
3. Refer to Table VII and Detail II to determine if the damage can be repaired with one, or a combination of details. If you can not find any detail description that is applicable to your damage, then do not use this repair. It is recommended that you contact Boeing for damage that is not covered by this repair.
4. Lay out the repair profile and the necessary fastener pattern as shown in the respective detail and example. If all of the requirements can not be met, do not use this repair. It is recommended that you contact the Boeing Company for repair instructions.
5. If there is a previous repair in the damaged area, do Procedure I.
6. If the repair is common to a lap joint, do Procedure II.
7. If the repair is common to a butt joint, do Procedure III.
8. If the repair is common to Stringer 17, do Procedure IV.
9. If the repair is common to the belly skin (between Stringers 25L - 25R), do Procedure V.
10. If the repair is common to the window belt skin Panel (between Stringer 10 and Stringer 14) then do Procedure VI.
11. Go to procedure VII after above applicable procedures are done.

PROCEDURE I: Inspection of the previous repair

CAUTION: IF THE PREVIOUS REPAIR HAS SIDE BY SIDE FASTENERS (NOT STAGGERED) THROUGH THE TEAR STRAPS THEN DO NOT USE THIS REPAIR.

1. Remove the previous repair parts that are in the repair area. Determine if the skin has countersinks at non-production fastener locations. If there are countersinks at non-production fastener locations, then do not use this repair. It is recommended that you contact The Boeing Company for repair instructions.
2. Do a High Frequency Eddy Current (HFEC) inspection of the all holes common to the previous repair as given in Detail XXXIX. Inspect the critical outer rows of fasteners in the skin. Use the work sheet that is given in Detail XXXIX to record the inspection data.

   NOTE: It is recommended that you send the Detail XXXIX Inspection Form to The Boeing Company.
3. Evaluate the previous damage to make sure that it is within the repairable limits of this repair.
4. Record the previous repair fastener spacing and hole sizes and edge margins.
5. If the fastener data is outside of the limits given in Table III, then contact The Boeing Company with both the new and previous damage and fastener data.

General Fuselage Skin Repair
Figure 48 (Sheet 1)

BOEING PROPRIETARY - Copyright © - Unpublished Work - See title page for details.

6. When a new repair from this SRM Figure is installed over a previous repair doubler, the new repair doubler must extend a minimum of two rows of fasteners beyond the critical row of fasteners inspected above. The exception to this is if the critical row is common to the BS 540.0, BS 727.0, or BS 1016 Butt Joint.

PROCEDURE II: Inspection and rework of the skin lap splice fastener holes

1. If this repair is made to airplanes with cum line numbers 1 to 291 (SB 737-53A1039 and 737-53A1224) and extends over any row of fasteners at a skin lap splice, do the steps that follow:

   A. Do a High Frequency Eddy Current (HFEC) countersink and hole probe inspection of all the lap splice fastener holes in the repair area. Refer to 737 NDT Part 6, 53-30-00, Figure 4 and 737 NDT Part 6, 51-00-00, Figure 16.

   - If there is no crack and the fastener holes have not previously been oversized as given in 737-53A1039, then oversize the fastener hole when the doubler is installed, as given in Table IV.
   - If there is a crack in the fastener hole that can be repaired with this figure, then cut and remove the damaged part of the lap joint. Combine both repairs into one repair as given in the example contained in this repair.
   - It is recommended that you complete the Detail XXXIX inspection Form and send to The Boeing Company.

   B. Do internal and external inspections of skin lap splice as given in SB 737-53A1224.

   C. Do a close visual inspection for signs of corrosion or disbond of the tear strap (or bonded doubler) in the area of the repair, at least one bay above and below the lap splice. Look for bulges between fasteners, missing or dished fastener heads or white powder when the fasteners are drilled out.

   D. If you find corrosion or disbond that can be repaired in the limits of this repair, then cut out the damage and do the repair.

   E. If your damage is outside the limits of this repair, it is recommended that you complete the Detail XXXIX inspection Form along with a description of the damage and send it to The Boeing Company.

2. If this repair is made to airplanes with cum line numbers 292 and on and if this repair extends over any row of fasteners at a skin lap splice, do the steps that follows:

   A. Remove the fasteners that are necessary for the repair.

   B. Do a close visual inspection for signs of corrosion or disbond of the tear strap (or bonded doubler) in the area of the repair, at least one bay above and below the lap splice. Look for bulges between fasteners, missing or dished fastener heads or white powder when the fasteners are drilled out.

   C. If you find corrosion or disbond that is not outside the limits of this repair, then cut out the damage and do the repair. If your damage is outside the limits of this repair it is recommended that you complete the Detail XXXIX inspection form along with a description of the damage and send it to The Boeing Company.

   D. Do an (HFEC) countersink and hole probe inspection of all the lap splice fastener holes in the repair area. Refer to 737 NDT Part 6, 53-30-00, Figure 4 and 737 NDT Part 6, 51-00-00 Figure 16.

   - If there is a crack in the fastener hole that can be repaired with this figure, then cut and remove the damaged part of the lap joint. Combine both repairs into one repair as given in the example. It is recommended that you complete the Detail XXXIX inspection Form and send it to The Boeing Company.

   E. Do a visual inspection of the chem-milled area as given in SB 737-53A1210.

   F. If your damage is outside the limits of this repair it is recommended that you complete the Detail XXXIX inspection form along with a description of the damage and send it to The Boeing Company for further instruction.

PROCEDURE III - Inspection and rework of the skin butt joint fastener holes

1. Do a visual inspection for signs of corrosion. Look for bulges in the skin between fasteners, and missing or dished fastener heads.
2. Remove the fasteners that are necessary for the repair
3. Do a visual inspection of the open holes for signs of corrosion. Look for white powder when fasteners are drilled out.
4. If you find corrosion that can be repaired in the limits of this repair, then cutout the damage and do the repair. If your damage is outside the limits of this repair, it is recommended that you contact The Boeing Company with details.

General Fuselage Skin Repair
Figure 48 (Sheet 2)

BOEING PROPRIETARY - Copyright © - Unpublished Work - See title page for details.

5. Do a High Frequency Eddy Current (HFEC) countersink and hole probe inspection of all the butt joint fastener holes in the repair area. Refer to 737 NDT Part 6, 53-30-00, Figure 4 and 737 NDT Part 6, 51-00-00 Figure 16.

   A. Use the above inspections to look for cracks in the skin, bonded doubler and butt joint splice strap.

   B. If there are no cracks, and the hole diameters have not been oversized before, as given in S/B 737-53-1076, then oversize the fasteners and install fasteners as given in Table IV.

   C. If there is a crack that can be repaired in the limits of this repair, then cut and remove the damaged part of the butt joint. Combine both repairs into one repair as given in the example. If there is a crack outside the limits of this repair it is recommended that you contact The Boeing Company with details.

PROCEDURE IV - Inspection and rework of the stringer 17 skin fastener holes

1. Do a visual inspection for signs of corrosion. Look for bulges in the skin between fasteners and missing or dished fastener heads.

2. Remove the fasteners that are necessary for the repair.

3. Do a visual inspection of the open holes for signs of corrosion. Look for white powder when fasteners are drilled out.

4. Do an internal visual inspection of the bonded doubler for disbonding. Inspect the bonded doubler under Stringer 17 and the tearstraps one bay above and below Stringer 17.

   - If you find corrosion or disbonding that can be repaired in the limits of this repair, then cutout the damage and do the repair. If your damage is outside the limits of this repair, it is recommended that you contact The Boeing Company with details.

5. Do a High Frequency Eddy Current (HFEC) countersink and hole probe inspection of all the stringer 17 fastener holes in the repair area. Refer to 737 NDT Part 6, 53-30-00, Figure 4 and 737 NDT Part 6, 51-00-00 Figure 16.

   A. Use the above inspections to look for cracks in the skin and bonded doubler.

   B. If there are no cracks, and the hole diameters have not been oversized before, as given in S/B 737-53-1089, then, if applicable, oversize the fasteners and install the fasteners when the doubler is installed, as given in Table IV.

   C. If there is a crack that can be repaired in the limits of this repair, then cut and remove the damaged part of the skin and bonded doubler. Combine both repairs into one repair as given in the example. If there is a crack outside the limits of this repair, it is recommended that you contact The Boeing Company with details.

PROCEDURE V - Inspection of the belly skins for compliance

1. For airplanes with cum line numbers 1 thru 410, 412 thru 418 and 432, do an internal visual inspection of the belly skin (between stringer 25L and 25R on the forward body, and between stringer 26L and 26R Aft body) to see if the skins were replaced as given in AD 90-06-02 and S/B 737-53A1042. Look for bonded waffle doublers. If you find waffle doublers, then the skins were not replaced as given in AD 90-06-02 (S/B 737-53A1042). Do not use this repair.

PROCEDURE VI - Inspection and rework of the fastener holes in the skin common to the window belt:

1. Do a visual inspection for signs of corrosion. Look for bulges in the skin between fasteners and missing or dished fastener heads.

2. Remove the fasteners that are necessary for the repair.

3. Do a visual inspection of the open holes for signs of corrosion. Look for white powder when fasteners are drilled out.

   - If you find corrosion that can be repaired in the limits of this repair, then cutout the damage and do the repair. If your damage is outside the limits of this repair, it is recommended that you contact The Boeing Company with details.

4. Do a High Frequency Eddy Current (HFEC) countersink and hole probe inspection of the fastener holes in the repair area. Refer to 737 NDT Part 6, 53-30-00, Figure 4 and 737 NDT Part 6, 51-00-00 Figure 16.

   A. Look for cracks in the skin and bonded doubler.

   B. If there are no cracks, and the hole diameters have not been oversized before as given in S/B 737-53-1078 or S/B 737-53-1124 or S/B 737-53-1079, then oversize the holes and install fasteners when the doubler is installed, as given in S/B 737-53-1078. If holes are common to the window belt, but it is not necessary to oversize them as given in S/B 737-53-1078, then install fasteners when the doubler is installed, as given in Table IV.

General Fuselage Skin Repair
Figure 48 (Sheet 3)

BOEING PROPRIETARY - Copyright © - Unpublished Work - See title page for details.

C. If there is a crack that can be repaired in the limits of this repair, then cut and remove the damaged part of the repair. Combine both repairs into one repair as given in the example. If there is a crack outside the limits of this repair, it is recommended that you contact The Boeing Company with details.

PROCEDURE VII: Repair Instructions

1. Remove the fasteners as necessary.

CAUTION: USE SPECIAL CARE TO CUT AND REMOVE THE DAMAGED PART OF THE SKIN AND DOUBLER. DO NOT GOUGE, SCRATCH, OR BUCKLE THE STRUCTURE ADJACENT TO THE CUTOUT. IF YOU DAMAGE THE ADJACENT STRUCTURE, MORE REPAIR WORK WILL BE NECESSARY.

2. Carefully cut and remove the damaged part of the tear strap and/or skin and doubler. Refer to the applicable detail. Ensure a minimum of 0.5 inch radius is kept.

   NOTE: Use a thin steel sheet between the tear strap and skin, doubler, or frame structure, or other adjacent structure as necessary to prevent damage to the adjacent structure.

3. Remove the steel sheet, if one was used.
4. Do an HFEC inspection along the edge of the cutout. Make sure there are no cracks, corrosion and disbond between the tear strap, skin and doubler. If there is no more damage, make the cutout larger by 0.04 inch. All cutout edges must have a finish of 63 microinches Ra or better. Refer to 737 NDT Part 6, 51-00-00 Figure 4 for the HFEC procedure.
5. Make the repair parts as given in the applicable details and Tables I and II.

CAUTION: WHEN YOU MAKE THE REPAIR PARTS, MAKE SURE THAT ALL APPLICABLE REQUIREMENTS OF SRM 51-20-1, PARAGRAPHS 9 THRU 12 ARE MET. REVERSE FORMING IS NOT PERMITTED. SHIMS ARE NOT PERMITTED BETWEEN THE REPAIR PARTS AND THE FUSELAGE SKIN, AND AT THE LAP SPLICE AREA.

6. Pre-form or roll the repair parts to match the fuselage skin contour before they are installed. Refer to SRM 51-20-1 for Sheet Metal Materials and SRM 51-70 Figure 4 for repair part surface smoothness.
7. Trim the Tape-Sound Dampening in the repair area to permit the installation of repair fasteners.
8. Assemble the repair parts. See the applicable details.
9. Drill the fastener holes. Refer to Tables IV and VI for respective fastener hole size and spacing. [M]

   NOTE: Use only 5D-6D fastener spacing. Fastener pattern does not have to line up with adjacent structure fastener pattern.

10. Remove the repair parts.
11. Remove all nicks, scratches, gouges, burrs, and sharp edges from the repair parts, tear strap and skin/ doubler. All machined surfaces must have a finish of 125 microinches Ra or better, unless a different finish is specified.
12. Apply a chemical conversion coating to the repair parts and the bare surfaces of the initial parts. Refer to SRM 51-10-2.
13. Apply one layer of BMS 10-79, Type II or III or BMS 10-11 Type I primer to the repair parts and the bare surfaces of the initial parts. Refer to SOPM 20-44-04.
14. Install repair washers in the countersink holes in the skin panels between the repair or filler plates and the skin. Install the repair washers with BMS 5-95 sealant. Refer to SRM 51-30-8.
15. Make sure that the initial and repair parts mating surfaces are clean. Refer to SRM 51-20-4.
16. Assemble the repair parts with BMS 5-95 sealant on all of the mating surfaces and in all the gaps.
17. Install the fasteners. Refer to SRM 51-30. Fasteners that are not made of aluminum must be installed wet with BMS 5-95 sealant in transition fit holes. Torque the hex drive bolts to 25 to 35 inch-pounds. [N]

    NOTE: If the production fasteners common to the repair are not rivets, or 3/16 lock-bolts or hex drive bolts, then either install the same type fastener except protruding head type or contact The Boeing Company. Install these fasteners in holes as given in the respective drawing requirements.

18. Retorque the hex drive bolts in less than the squeeze-out time for the sealant as given in the BMS 5-95 specification. Refer to SRM 51-30-4.
19. Apply a fillet seal along the edges of the repair parts.

General Fuselage Skin Repair
Figure 48 (Sheet 4)

BOEING PROPRIETARY - Copyright © - Unpublished Work - See title page for details.

20. Apply a layer of BMS 3-23 Type 2 corrosion inhibiting compound onto the internal surface of the entire repair area after the the BMS 5-95 sealant has cured. Refer to SRM 51-10-2.

21. Apply a finish to the external surface of the repair area. Refer to AMM 51-21.

NOTES

- A REPAIR MADE AS GIVEN IN THIS FIGURE IS AN ALTERNATE METHOD OF COMPLIANCE UNDER THE REPAIR, TO:
  - SB 737-53A1076 AND PARAGRAPH (d)(3) OF FAA AD 92-25-09, AMENDMENT 39-8424 AND AMENDMENT 39-6978, AND PARAGRAPH A OF FAA 90-06-02, AMENDMENT 39-6489 IN THE AREAS COVERED BY THIS REPAIR
  - SB 737-53A1039 AND PARAGRAPH H.1.a AND H.1.b OF FAA AD 88-22-11 R1, AMENDMENT 39-6432 AND PARAGRAPH A.1 OF AD 89-09-03, AMENDMENT 39-6184 IN THE AREAS COVERED BY THIS REPAIR
  - SB 737-53A1089 AND PARAGRAPH A.2 OF FAA AD 89-09-03, AMENDMENT 39-6184 AND PARAGRAPH H.2 OF FAA AD 88-22-11R1, AMENDMENT 39-6432 IN THE AREAS COVERED BY THIS REPAIR
  - SB 737-53A1224 AND PARAGRAPH (b) OF FAA AD 2000-17-04, AMENDMENT 39-11878 IN THE AREAS COVERED BY THIS REPAIR
  - SB 737-53-1177 R6 AND PARAGRAPHS (b) AND (c) OF FAA AD 2002-07-10, AMENDMENT 39-12704 AND PARAGRAPHS (d) AND (e) OF FAA AD 2002-07-08 AMENDMENT 39-12704 IN THE AREAS COVERED BY THIS REPAIR.
  - SB 737-53A1255 AND PARAGRAPH (f)(1) OF FAA AD 2003-08-15, AMENDMENT 39-13128 IN THE AREAS COVERED BY THIS REPAIR.
  - SB 737-53-1042 AND PARAGRAPH C OF FAA AD 82-01-09, AMENDMENT 38-4299,AND PARAGRAPH A OF FAA AD 90-06-02, AMENDMENT 39-6489 IN THE AREAS COVERED BY THIS REPAIR.
- A QUALITY CONTROL (QC) CHECKLIST IS PROVIDED AT THE END OF THIS FIGURE (DETAIL XL). THE USE OF THIS QC CHECKLIST IS NOT A REQUIREMENT. IF YOU CHOOSE TO USE THE QC CHECKLIST, IT WILL MAKE SURE THAT YOU HAVE ACCOMPLISHED THE MOST CRITICAL STEPS IN THIS PROCEDURE. IT WILL NOT CHECK TO MAKE SURE THAT YOU HAVE ACCOMPLISHED ALL NECESSARY STEPS IN THIS PROCEDURE.
- ALL DIMENSIONS ARE IN INCHES, UNLESS SHOWN DIFFERENTLY.
- D = FASTENER DIAMETER
- USE A MINIMUM OF 2D EDGE MARGIN, UNLESS SHOWN DIFFERENTLY.
- USE 5D - 6D SPACING BETWEEN REPAIR FASTENERS.
- MAKE SURE THAT ALL RIVETS IN THE OUTER ROW AND LAP SPLICE JOINT ARE OVERDRIVEN TO A MINIMUM OF 1.4 TIMES THE DIAMETER.
- MACHINED SURFACES AND ALL CUTOUT EDGES MUST HAVE A FINISH OF 125 MICRONINCHES Ra OR BETTER, UNLESS A DIFFERENT FINISH IS SPECIFIED.
- KEEP A MINIMUM OF 0.5 INCH EXTERNAL RADIUS AND 2.0 INCHES INTERNAL RADIUS ON REPAIR PART CORNERS.
- CHAMFER ALL VISIBLE EDGES OF EXTERNAL REPAIR PARTS THAT ARE THICKER THAN 0.05 INCH. REFER TO SRM 51-70 FIGURE 1 FOR CHAMFER DETAIL.

WHEN YOU USE THIS REPAIR REFER TO:

- AMM 51-21 FOR INTERIOR AND EXTERIOR FINISHES
- AMM 51-31 FOR SEALS AND SEALING
- NDT PART 6, 51-00-00, FIG.16, FOR HFEC ALUMINUM PART FASTENER HOLE INSPECTION. USE A 0.03 INCH NOTCH STANDARD
- NDT PART 6, 53-30-00, FIG. 4, FOR HFEC COUNTERSINK INSPECTION OF ALUMINUM PARTS
- SOPM 20-44-04 FOR APPLICATION OF URETHANE COMPATIBLE FINISHES
- SRM 51-00-4 FOR A LIST OF STRUCTURALLY SIGNIFICANT ITEMS (SSID DETAILS)
- SRM 51-00-6 FOR REPAIR CATEGORIES, DEFINITIONS AND REPAIR ASSESSMENT PROGRAM INFORMATION
- SRM 51-10-1 FOR INSPECTION AND REMOVAL OF DAMAGE
- SRM 51-10-2 FOR PROTECTIVE TREATMENT OF METALS
- SRM 51-10-6 FOR CORROSION REMOVAL AND SURFACE FINISHING REQUIREMENTS
- SRM 51-20-1 FOR SHEET METAL MATERIALS
- SRM 51-20-4 FOR REPAIR SEALING
- SRM 51-30 FOR FASTENER CODE, REMOVAL AND INSTALLATION, HOLE SIZES, EDGE MARGINS AND SUBSTITUTION
- SRM 51-30-8 FOR COUNTERSINKING OF HOLES AND USE OF COUNTERSINK REPAIR WASHERS
- SRM 51-70 FOR AERODYNAMIC SMOOTHNESS REQUIREMENTS.

General Fuselage Skin Repair
Figure 48 (Sheet 5)

BOEING PROPRIETARY - Copyright © - Unpublished Work - See title page for details.

NOTES (CONTINUED)

A EXTEND THE DOUBLER OR STRUCTURAL FILLER A MINIMUM OF FOUR FASTENER ROWS BEYOND ALL SIDES OF THE CUTOUT.

B EXTEND THE TRIPLER A MINIMUM OF THREE FASTENER ROWS BEYOND ALL SIDES OF THE CUTOUT.

C IF THE DOUBLER ENDS ON A STRINGER OR TEAR STRAP, EXTEND THE DOUBLER A MINIMUM OF TWO FASTENER ROWS BEYOND THE STRINGER AND ONE FASTENER ROW BEYOND THE TEAR STRAP. AI

D STAGGER FASTENERS COMMON TO THE REPAIR DOUBLER, TRIPLER AND TEAR STRAP. SEE DETAIL III THROUGH DETAIL VI FOR STAGGERED FASTENER REQUIREMENTS.

E DO NOT END THE REPAIR DOUBLER COMMON TO A LAP SPLICE. IF THE REPAIR DOUBLER ENDS WITHIN 3 INCHES FROM THE UPPER OR LOWER ROW OF THE LAP SPLICE, THEN EXTEND THE REPAIR PARTS A MINIMUM OF THREE FASTENER ROWS BEYOND THE LAP SPLICE.

F IF THE TEAR STRAP HAS BEEN CUT, A MINIMUM OF FIVE FASTENERS ARE NECESSARY COMMON TO THE TEAR STRAP, REPAIR DOUBLER AND TRIPLER AND A MINIMUM OF ONE ADDITIONAL FASTENER IS NECESSARY, COMMON TO THE TEAR STRAP AND DOUBLER OR STRUCTURAL FILLER.

G USE A MINIMUM OF 0.75 INCH SPACING AT THE OUTER THREE FASTENERS COMMON TO THE TEAR STRAP. SEE DETAIL IV AND V FOR FASTENER REQUIREMENTS.

H IF THE REPAIR DOUBLER ENDS IN THE BUTT JOINT FASTENER ROWS OR ONE FASTENER ROW FROM THE BUTT JOINT AT BS 259.5, BS 540, BS 727, AND BS 1016 EXTEND THE REPAIR DOUBLER AND TRIPLER TO THE EDGE OF THE BUTT JOINT. IF THE REPAIR IS AT BS 360 OR BS 908, THE REPAIR DOUBLER MUST EXTEND A MINIMUM OF 4 ROWS BEYOND THE BUTT JOINT EDGE.

I THE STAGGERED ROW COMMON TO THE TEAR STRAP COUNTS AS ONE ROW OF FASTENERS IN THE LONGITUDINAL DIRECTION.

J IF A DRAIN HOLE IS COMMON TO THE REPAIR, EXTEND THE REPAIR PARTS A MINIMUM OF 3 FASTENERS ALL AROUND THE DRAIN HOLE AND REINSTALL THE DRAIN THROUGH THE REPAIR PARTS.

K MAKE THE FILLER THE SAME GAGE AS THE INITIAL PART THAT WAS REMOVED.

L MAKE THE FILLERS FROM 0.036, 0.040, 0.050 OR 0.063 INCH THICK, CLAD 2024-T3. MAKE THE THICKNESS OF PART 5 (STRUCTURAL FILLER) AND PART 6 (STRUCTURAL FILLER) THE SAME THICKNESS AS THE OVERLAPPING SKIN PLUS BONDED DOUBLER.

M WHEN YOU DRILL NEW FASTENER HOLES, USE CARE NOT TO DRILL NEAR THE EDGE OF THE TEAR STRAP. TEAR STRAP FASTENERS SHOULD BE DRILLED FROM THE INNER FACE OF THE PANEL.

N OVERDRIVE RIVETS TO A MINIMUM 1.4 TIMES THE DIAMETER.

O IF THE REPAIRS ARE WITHIN THREE FASTENER ROWS OF EACH OTHER, THE REPAIRS MUST BE COMBINED.

P EXTEND THE EDGE OF THE PART 6 (STRUCTURAL FILLER) ONE FASTENER ROW BEYOND THE EDGE OF THE PART 1 OR PART 10 (DOUBLER) IN THE CIRCUMFERENTIAL DIRECTION.

Q EXTEND THE EDGE OF THE PART 5 (STRUCTURAL FILLER) ONE FASTENER ROW BEYOND THE EDGE OF THE PART 6 (STRUCTURAL FILLER).

R INSTALL PART 7 OR 8 (TEAR STRAP INTERNAL DOUBLER) AT ALL LOCATIONS WHERE THE TEAR STRAP HAS BEEN CUT AND THERE IS NO SHEAR TIE. EXTEND THE TEAR STRAP INTERNAL DOUBLER A MINIMUM OF THREE FASTENERS PAST THE REPAIR PARTS. PART 7 OR 8 (TEAR STRAP INTERNAL DOUBLER) CAN BE A DIFFERENT SHAPE AT DIFFERENT LOCATIONS.

S MAKE THE TAPERED FILLER WITH A 50 TO 1 MINIMUM TAPER RATIO.

T BACR15BB6 FASTENER HOLES MAY BE OVERSIZED 1/32 INCH IF HOLE CLEAN-UP IS NECESSARY. INSTALL A BACR15ET7AD RIVET. DO NOT OVERSIZE 7/32 INCH OR 1/4 INCH DIAMETER HOLES UNLESS PERMITTED AS GIVEN IN TABLE IV.

U REFER TO THE OPERATOR'S REPAIR ASSESSMENT GUIDELINES FOR THE REPEAT INSPECTION INTERVAL AND METHOD ALTERNATIVES.

V THIS REPAIR IS CATEGORY A AND NO SUPPLEMENTAL INSPECTIONS ARE NECESSARY IF CONDITION 1, 2 OR 3 IS MET:

1. a) THE CRITICAL FASTENER ROWS IN THE SKIN, DOUBLER AND TEARSTRAP CAN BE VISUALLY INSPECTED FROM THE INSIDE
   b) THE MINIMUM SKIN THICKNESS IS AT THE CRITICAL FASTENER ROWS EQUAL TO OR THICKER THAN 0.056 INCH
2. a) THE LENGTH AND WIDTH OF THE REPAIR PART 1 (DOUBLER) IS LESS THAN OR EQUAL TO 12 INCHES
   b) THE CRITICAL FASTENER ROWS IN THE SKIN, DOUBLER AND TEARSTRAP CAN BE VISUALLY INSPECTED FROM THE INSIDE
   c) NO OTHER REPAIR DOUBLER IS INSTALLED WITHIN 3 INCHES IN EITHER DIRECTION

General Fuselage Skin Repair
Figure 48 (Sheet 6)

BOEING PROPRIETARY - Copyright © - Unpublished Work - See title page for details.

NOTES (CONT)

3. a) THE LENGTH OF THE REPAIR PART 1 (DOUBLER) IN THE LONGITUDINAL DIRECTION IS LESS THAN OR EQUAL TO 12 INCHES

b) THE REPAIR PART 1 (DOUBLER) IS LOCATED BELOW S-10L OR S-10R

c) THE CRITICAL FASTENER ROWS IN THE SKIN DOUBLER AND TEARSTRAP CAN BE VISUALLY INSPECTED FROM THE INSIDE

d) NO OTHER REPAIR DOUBLER IS INSTALLED WITHIN 3 INCHES IN THE LONGITUDINAL DIRECTION

IF THIS REPAIR IS NOT CATEGORY A, THEN IT IS CATEGORY B. THE CATEGORY B REPAIR HAS FAA APPROVAL IF YOU DO THE SUPPLEMENTAL INSPECTIONS GIVEN IN TABLE VIII. INCORPORATION OF THESE INSPECTION REQUIREMENTS INTO THE AIRPLANE'S MAINTENANCE PROGRAM SATISFIES THE DAMAGE TOLERANCE ASSESSMENT OF THE REPAIR SPECIFIED IN THE REPAIR ASSESSMENT PROGRAM. THIS ASSESMENT CAN BE DONE AFTER YOU RELEASE THE AIRCRAFT TO SERVICE. REFER TO SRM 51-00-6 FOR GENERAL DATA ABOUT THE REPAIR ASSESSMENT PROGRAM. SEE DETAILS XXXVI, XXXVII AND XXXVIII AS APPLICABLE FOR THE INSPECTION AREA.

[W] THIS REPAIR WILL HAVE AN EFFECT ON THE STRUCTURALLY SIGNIFICANT ITEM (SSI):

- NUMBER F-39 WHEN INSTALLED IN THE CROWN AREA; BUT THE SUPPLEMENTAL INSPECTIONS GIVEN IN TABLE VIII WILL MEET THE SSID INSPECTION REQUIREMENTS FOR F-39F, G AND H IN THE REPAIR AREA. HOWEVER, THE INTERNAL INSPECTION ALTERNATIVES OF F-39A, B AND C ARE STILL APPLICABLE.
- NUMBER F-41 WHEN INSTALLED IN THE LOWER LOBE AND WING-TO-BODY FAIRING AREAS, BUT THE SUPPLEMENTAL INSPECTIONS GIVEN IN TABLE VIII WILL MEET THE SSID EXTERNAL INSPECTION REQUIREMENT FOR F-41. HOWEVER, THE INTERNAL INSPECTION OF F-41 IS STILL APPLICABLE.

DO THE INTERNAL INSPECTIONS FOR F-39A, B, C AND F-41, IF NECESSARY, AT THE SUBSEQUENT SUPPLEMENTAL STRUCTURAL INSPECTION DOCUMENT (SSID) INSPECTION ON THIS AIRPLANE. REFER TO SRM 51-00-4, FIGURE 3 FOR THE APPLICABLE DATA.

[X] CONTINUE WITH THE INSPECTIONS OF THE LAP SPLICE AS GIVEN IN SB 737-53A1177.

[Y] THIS REPAIR WILL HAVE AN EFFECT ON THE STRUCTURALLY SIGNIFICANT ITEM (SSI) NUMBER F-48, BUT THE SUPPLEMENTAL INSPECTIONS GIVEN IN TABLE VIII FOR THE NEW CRITICAL DETAIL WILL MEET THE SSID INSPECTION REQUIREMENTS OF F-48 IN THE REPAIR AREA. REFER TO SRM 51-00-4, FIG. 3, FOR THE APPLICABLE DATA.

[Z] THIS REPAIR WILL HAVE AN EFFECT ON THE STRUCTURALLY SIGNIFICANT ITEM (SSI):

- NUMBER F-38C AND F-39 WHEN INSTALLED AT BS 540 IN THE CROWN AREA, BUT THE SUPPLEMENTAL INSPECTIONS GIVEN IN TABLE VIII WILL MEET THE SSID NSPECTION REQUIREMENT FOR F-39F, G AND H IN THE REPAIR AREA. HOWEVER, THE INTERNAL INSPECTIONS OF F-38C AND THE INTERNAL INSPECTION ALTERNATIVES OF F-39A, B AND C ARE STILL APPLICABLE.
- NUMBER F-38D AND F-39 WHEN INSTALLED AT BS 727 IN THE CROWN AREA, BUT THE SUPPLEMENTAL INSPECTIONS GIVEN IN TABLE VIII WILL MEET THE SSID INSPECTION REQUIREMENTS FOR F-39F, G AND H IN THE REPAIR AREA. HOWEVER, THE INTERNAL INSPECTIONS OF F-38D AND THE INTERNAL INSPECTION ALTERNATIVES OF F-39A, B AND C ARE STILL APPLICABLE.
- NUMBER F-38F AND G WHEN INSTALLED AT BS 1016 IN THE CROWN AREA; BUT THE INTERNAL INSPECTIONS OF F-38F AND G ARE STILL APPLICABLE.

DO THE INTERNAL INSPECTIONS FOR F-38C, D, F AND G AND F-39A, B AND C, IF NECESSARY, AT THE SUBSEQUENT SUPPLEMENTAL STRUCTURAL INSPECTION DOCUMENT (SSID) INSPECTION ON THIS AIRPLANE. REFER TO SRM 51-00-4, FIG. 3, FOR THE APPLICABLE DATA.

[AA] THIS REPAIR WILL HAVE AN EFFECT ON THE STRUCTURAL SIGNIFICANT ITEM (SSI):

- NUMBER F-38A AND B WHEN INSTALLED AT BS 360 IN THE CROWN AREA, BUT THE INTERNAL INSPECTIONS OF F-38A AND B ARE STILL APPLICABLE.
- NUMBER F-38E AND F-39 WHEN INSTALLED AT BS 908 IN THE CROWN AREA, BUT THE SUPPLEMENTAL INSPECTIONS GIVEN IN TABLE VIII WILL MEET THE SSID INSPECTION REQUIREMENTS FOR F-39H IN THE REPAIR AREA. HOWEVER, THE INTERNAL INSPECTIONS OF F-38E AND THE INTERNAL INSPECTION ALTERNATIVES OF F-39C ARE STILL APPLICABLE.

General Fuselage Skin Repair
Figure 48 (Sheet 7)

BOEING PROPRIETARY - Copyright © - Unpublished Work - See title page for details.

NOTES (CONT)

DO THE INTERNAL INSPECTIONS FOR F-38A, B AND E AND F-39C, IF NECESSARY, AT THE SUBSEQUENT SUPPLEMENTAL STRUCTURAL INSPECTION DOCUMENT (SSID) INSPECTION ON THIS AIRPLANE. REFER TO SRM 51-00-4, FIG. 3, FOR THE APPLICABLE SSI DATA.

AB THIS REPAIR WILL HAVE AN EFFECT ON THE STRUCTURAL SIGNIFICANT ITEM (SSI):

- NUMBER F-38A AND B WHEN INSTALLED AT BS 360 IN THE CROWN AREA, BUT THE INTERNAL INSPECTIONS OF F-38A AND B ARE STILL APPLICABLE.
- NUMBER F-38E WHEN INSTALLED AT BS 908 IN THE CROWN AREA, BUT THE INTERNAL INSPECTIONS OF F-38E ARE STILL APPLICABLE.

DO THE INTERNAL INSPECTIONS FOR F-38A, B AND E, IF NECESSARY, AT THE SUBSEQUENT SUPPLEMENTAL STRUCTURAL INSPECTION DOCUMENT (SSID) INSPECTION ON THIS AIRPLANE. REFER TO SRM 51-00-4, FIG. 3, FOR THE APPLICABLE DATA.

AC THIS REPAIR WILL HAVE AN EFFECT ON THE STRUCTURAL SIGNIFICANT ITEM (SSI):

- NUMBER F-38C WHEN INSTALLED AT BS 540 IN THE CROWN AREA, BUT THE INTERNAL INSPECTIONS OF F-38C ARE STILL APPLICABLE.
- NUMBER F-38D WHEN INSTALLED AT BS 727 IN THE CROWN AREA, BUT THE INTERNAL INSPECTIONS OF F-38D ARE STILL APPLICABLE.
- NUMBER F-38F AND G WHEN INSTALLED AT BS 1016 IN THE CROWN AREA, BUT THE INTERNAL INSPECTIONS OF F-38F AND G ARE STILL APPLICABLE.

DO THE INTERNAL INSPECTIONS FOR F-38C, D, F AND G, IF NECESSARY, AT THE SUBSEQUENT SUPPLEMENTAL STRUCTURAL INSPECTION DOCUMENT (SSID) INSPECTION ON THIS AIRPLANE. REFER TO SRM 51-00-4, FIG. 3, FOR THE APPLICABLE DATA.

AD IF THE AIRPLANE HAS LESS THAN 66,000 FLIGHT CYCLES, THE INSPECTION THRESHOLD IS THE EARLIER OF:

- THE INITIAL SCHEDULED INSPECTION AS GIVEN IN THE OPERATOR'S REPAIR ASSESSMENT PROGRAM (RAP)
- 66,000 FLIGHT CYCLES.

IF THE AIRPLANE HAS MORE THAN 66,000 FLIGHT CYCLES AND THE INITIAL SCHEDULED SUPPLEMENTAL STRUCTURAL INSPECTION DOCUMENT (SSID) INSPECTION HAS BEEN PERFORMED, THE INSPECTION THRESHOLD IS:

- THE NEXT SCHEDULED SSID INSPECTION FOR THE STRUCTURALLY SIGNIFICANT ITEMS F-39F, F-39G AND F-39H IN THE REPAIRED AREA.

AE THE NEW REPAIR DOUBLER OR FILLER, AS APPLICABLE, MUST EXTEND A MINIMUM OF TWO FASTENER ROWS BEYOND THE CRITICAL ROW OF FASTENERS OF THE PREVIOUS REPAIR. IF THE CRITICAL ROW OF FASTENERS IS COMMON TO THE BS 259.5, BS 540.0, BS 727.0, OR BS 1016 BUTT JOINT, DO NOT EXTEND THE DOUBLER OR FILLER BEYOND THESE STATIONS.

AF ENSURE THAT STRUCTURAL FILLERS ARE INSTALLED AT LOCATIONS WHERE THE CUTOUT IS COMMON TO A SHEAR-TIE AND BUTT JOINT. MAKE SURE THAT THE DAMAGE CUTOUT IS LARGE ENOUGH TO PERMIT TWO ROWS OF FASTENERS TO BE INSTALLED IN THE PART 3 (STRUCTURAL FILLER). SEE DETAIL VII. IF THE STRUCTURAL FILLER HAS ONE PRODUCTION FASTENER COMMON TO IT THEN INSTALL A NEW FASTENER ON EACH SIDE OF THE PRODUCTION FASTENER COMMON TO THE STRUCTURAL FILLER. SEE DETAIL V.

AG STATIC PORT ZONES. DO NOT USE THIS REPAIR FIGURE IF ANY PART OF THE REPAIR FALLS IN THE REPAIR ZONES A, B OR C AS GIVEN IN SRM 51-70, FIGURE 8.

AH THE PERFORMANCE ADJUSTMENTS ARE GIVEN IN THE AIRPLANE FLIGHT MANUAL APPENDIX TITLED "PERFORMANCE ADJUSTMENTS FOR OPERATIONS WITH EXTENSIVE FUSELAGE REPAIRS". GIVE THE SUM OF ALL THE REPAIRS DONE WITH THIS FIGURE, FIGURE 46 AND FIGURE 49 IN SQUARE INCHES TO THE DISPATCHER FOR SELECTION OF THE APPROPRIATE PERFORMANCE ADJUSTMENT.

AI THE REPAIR MUST STOP A MINIMUM OF 0.5 INCH BEFORE A LONGITUDINAL CHEM-MILLED STEP EDGE. THIS WILL PERMIT YOU TO DO AN EXTERNAL INSPECTION OF THE CHEM-MILLED STEP. IF THE REPAIR STOPS LESS THAN 0.5 INCH BEFORE A LONGITUDINAL CHEM-MILLED STEP, EXTEND THE REPAIR A MINIMUM OF TWO FASTENER ROWS PAST THE LONGITUDINAL CHEM-MILLED STEP EDGE. THIS WILL GIVE A FAILSAFE LOAD PATH IF THERE WERE UNDETECTED INITIAL CRACKS IN THE CHEM-MILLED STEP.

AJ FOR A 1.2 INCHES WIDE TEAR STRAP, IF THE TEAR STRAP IS CUT, A MINIMUM OF FOUR FASTENERS ARE NEEDED COMMON TO THE REPAIR DOUBLER, TEAR STRAP AND TRIPLER AND A MINIMUM ONE ADDITIONAL FASTENER COMMON TO THE TEAR STRAP AND DOUBLER OR STRUCTURAL FILLER. REFER TO DETAIL XLI.

AK DO NOT END PART 10 (DOUBLER) ON 0.032 OR 0.036 INCH THICK SKIN POCKETS, IF THIS CAN NOT BE PREVENTED THEN A PART 1 (DOUBLER) PLUS A PART 2 (TRIPLER) SHOULD BE USED.

General Fuselage Skin Repair
Figure 48 (Sheet 8)

BOEING PROPRIETARY - Copyright © - Unpublished Work - See title page for details.

THICKNESS OF THE DAMAGED SKIN (ONLY) THAT IS CUTOUT	NECESSARY THICKNESS (INCHES)
0.032	0.050
0.036	0.050
0.040	0.050
0.045	0.063
0.050	0.063
0.063	AK { 0.063 (FOR PART 2) 0.071 (FOR PART 10)

PART 2 (TRIPLER) AND PART 10 (DOUBLER) THICKNESS, TABLE I

NUMBER	PART	QUANTITY	MATERIAL
1	DOUBLER	1	0.032 INCH THICK, CLAD 2024-T3
2	TRIPLER	1	CLAD 2024-T3, SEE TABLE I FOR THICKNESS
3	STRUCTURAL FILLER	AS NEEDED	CLAD 2024-T3 K
4	FILLER	AS NEEDED	CLAD 2024-T3 K
5	STRUCTURAL FILLER	AS NEEDED	0.032 INCH THICK, CLAD 2024-T3
6	STRUCTURAL FILLER	AS NEEDED	CLAD 2024-T3 L
7	TEAR STRAP INTERNAL DOUBLER	AS NEEDED	0.032 INCH THICK, CLAD 2024-T3
8	TEAR STRAP INTERNAL DOUBLER	AS NEEDED	0.032 INCH THICK, CLAD 2024-T3
9	TAPERED FILLER	AS NEEDED	0.032 INCH THICK, CLAD 2024-T3 S
10	DOUBLER	AS NEEDED	CLAD 2024-T3, SEE TABLE I FOR THICKNESS
11	FILLER	AS NEEDED	CLAD 2024-T3, SAME THICKNESS AS TEAR STRAP
12	FILLER	AS NEEDED	CLAD 2024-T3, SAME THICKNESS AS A TOTAL OF UPPER SKIN AND TEAR STRAP
13	FILLER	AS NEEDED	CLAD 2024-T3, SAME THICKNESS AS TEAR STRAP

REPAIR MATERIAL, TABLE II

	FOR HOLES WHERE CLEAN-UP IS NOT NECESSARY	FOR HOLES WHERE CLEAN-UP IS NECESSARY
FASTENER HOLE SIZES (INCH) COMMON TO PREVIOUS REPAIR	NECESSARY FASTENER SPACING	NECESSARY FASTENER SPACING
0.159 TO 0.190	0.81 TO 1.14	0.932 TO 1.326
0.191 TO 0.202	0.81 TO 1.14	0.932 TO 1.326
0.203 TO 0.233 (7/32)	0.932 TO 1.326	1.06 TO 1.524
0.234 TO 0.265 (1/4)	1.06 TO 1.524	CONTACT THE BOEING COMPANY
GREATER THAN 0.265	CONTACT THE BOEING COMPANY	CONTACT THE BOEING COMPANY

NECESSARY FASTENER SPACING FOR PREVIOUS FASTENER LOCATIONS THAT ARE PART OF A PREVIOUS REPAIR, TABLE III

NOTES

- CONTACT THE BOEING COMPANY IF YOU HAVE A HOLE SIZE OR FASTENER SPACING THAT IS NOT SHOWN.
- IF ANY PREVIOUS FASTENER HOLES AT THE REPAIR LOCATION ARE COUNTERSUNK MORE THAN 2/3 OF THE THICKNESS OF THE SKIN OR SKIN PLUS BONDED DOUBLER, CONTACT THE BOEING COMPANY WITH THE LOCATION OF THE HOLES, THE HOLE SIZES, SPACING AND COUNTERSINK DEPTH/TYPE. THE EXCEPTIONS TO THIS ARE PRODUCTION FASTENER LOCATIONS WHICH ARE COUNTERSUNK MORE 2/3 INITIALLY AND HAVE NOT BEEN OVERSIZED.
- WHEN YOU OVERSIZE THE HOLES, MAKE SURE THAT YOU HAVE A 1.7D MINIMUM EDGE MARGIN IN ALL STRUCTURE COMMON TO THE OVERSIZED HOLES.

General Fuselage Skin Repair
Figure 48 (Sheet 9)

BOEING PROPRIETARY - Copyright © - Unpublished Work - See title page for details.

SYMBOL	INITIAL FASTENER	AFTER HFEC INSPECTION OVERSIZE THE INITIAL FASTENER HOLE TO:	REPLACEMENT FASTENER [N] [T]
	REFERENCE FASTENER LOCATION		SAME SIZE AND TYPE AS INITIAL FASTENER IF IT IS REMOVED
	PRODUCTION FASTENER TYPE		
	BACR15CE5 OR BB5	0.191 - 0.202	BACR15BB6D
	BACR15CE6 OR BB6	0.191 - 0.202	BACR15BB6D
	BACR15CE8 OR BB8	0.254 - 0.265	BACR15BB8D
	3/16 DIA HEX DRIVE BOLT/LOCKBOLT	0.200 - 0.203	BACB30MC6A OR BACB30NX6K*X
	LAP SPLICE AND S-17 FASTENER TYPE (L/N 1-519)		
	BACR15CE5 OR BB5	0.221 - 0.233	BACR15ET7AD
	BACR15CE6 OR BB6	0.254 - 0.265	BACR15BB8AD
	BACR15DS7 OR ET7	0.221 - 0.233	BACR15ET7AD
	BACR15CE8 OR BB8	0.254 - 0.265	BACR15BB8D
	3/16 DIA HEX DRIVE BOLT/LOCKBOLT	0.200 - 0.203	BACB30MC6A OR BACB30NX6K*X
	1/4 DIA HEX DRIVE BOLT/LOCKBOLT	0.263 - 0.266	BACB30MC8A OR BACB30NX8K*X
	LAP SPLICE AND S-17 FASTENER TYPE (L/N 520 AND ON)		
	BACR15CE5 OR BB5	0.191 - 0.202	BACR15BB6D
	BACR15CE6 OR BB6	0.191 - 0.202	BACR15BB6D
	BACR15CE8 OR BB8	0.254 - 0.265	BACR15BB8D
	3/16 DIA HEX DRIVE BOLT/LOCKBOLT	0.200 - 0.203	BACB30MC6A OR BACB30NX6K*K
	1/4 DIA HEX DRIVE BOLT/LOCKBOLT	0.263 - 0.266	BACB30MC8A OR BACB30NX8K*X
	BUTT SPLICE OUTER ROW FASTENER TYPE (L/N 1-519)		
	BACR15CE6 OR BB6	0.254 - 0.265	BACR15BB8AD
	BACR15CE8 OR BB8	0.254 - 0.265	BACR15BB8D
	3/16 DIA HEX DRIVE BOLT/LOCKBOLT	0.200 - 0.203	BACB30MC6A OR BACB30NX6K*X
	1/4 DIA HEX DRIVE BOLT/LOCKBOLT	0.263 - 0.266	BACB30MC8A OR BACB30NX8K*X
	(L/N 520 AND ON)		
	BACR15CE6 OR BB6	0.191 - 0.202	BACR15BB6D
	BACR15CE8 OR BB8	0.254 - 0.265	BACR15BB8D
	3/16 DIA HEX DRIVE BOLT/LOCKBOLT	0.200 - 0.203	BACB30MC6A OR BACB30NX6K*X
	1/4 DIA HEX DRIVE BOLT/LOCKBOLT	0.263 - 0.266	BACB30MC8A OR BACB30NX8K*X
	TEARSTRAP TAB UPPER TWO FASTENERS TYPE		
	BACR15CE5 OR BB5	0.221 - 0.233	BACR15ET7AD
	BACR15CE6 OR BB6	0.254 - 0.265	BACR15BB8AD

INITIAL PRODUCTION INSTALLED FASTENER REPLACEMENT
TABLE IV

General Fuselage Skin Repair
Figure 48 (Sheet 10)

BOEING PROPRIETARY - Copyright © - Unpublished Work - See title page for details.

SYMBOL	NEW FASTENER	INSTALL [N]
	REPAIR FASTENER	BACR15BB6D SPACING 5D TO 6D
	FIELD FASTENER	BACR15CE5D OR BACR15CE5AD SPACING 8D TO 10D
	TEAR STRAP FASTENER [M]	BACR15BB6D SEE DETAIL III THROUGH VI FOR SPACING
	OUTER ROW FASTENER.	BACR15BB6AD SPACING 5D TO 6D

NEW REPAIR FASTENERS
TABLE V

SYMBOL	FASTENER LOCATION	INITIAL FASTENER HOLE SIZE	INSTALL [N] [T]
	REPAIR FASTENER	0.159 - 0.190	BACR15BB6D
		0.191 - 0.202	BACR15BB6D
		0.203 - 0.233	BACR15ET7AD
		0.234 - 0.265	BACR15BB8AD
	TEAR STRAP FASTENER	0.159 - 0.190	BACR15BB6D
		0.191 - 0.202	BACR15BB6D
		0.203 - 0.233	CONTACT THE BOEING COMPANY
		0.234 - 0.265	CONTACT THE BOEING COMPANY
	OUTER ROW FASTENER	0.159 - 0.190	BACR15BB6AD
		0.191 - 0.202	BACR15BB6AD
		0.203 - 0.233	BACR15ET7AD
		0.234 - 0.265	BACR15BB8AD
	FIELD FASTENER	N/A	USE TABLE V

NOTE: AT PRODUCTION FASTENER LOCATION, INSTALL FASTENER AS GIVEN IN TABLE IV. USE FASTENERS THAT ARE EQUIVALENT TO PRODUCTION FASTENERS. ENSURE THAT RIVETS WERE NOT INSTALLED IN THE PREVIOUS REPAIR WHERE PRODUCTION LOCKBOLTS/HEX DRIVE BOLTS WERE ORIGINALLY INSTALLED.

NON-PRODUCTION FASTENERS COMMON TO A PREVIOUS REPAIR REPLACEMENT
TABLE VI

General Fuselage Skin Repair
Figure 48 (Sheet 11)

BOEING PROPRIETARY - Copyright © - Unpublished Work - See title page for details.

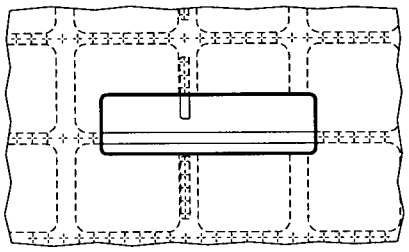

SKIN CUTOUT AT A SHEAR TIE AND TEAR STRAP ON A STRINGER SEE DETAIL VII

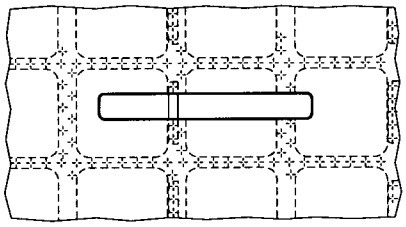

SKIN CUTOUT AT A SHEAR TIE BETWEEN TWO STRINGERS SEE DETAIL VIII

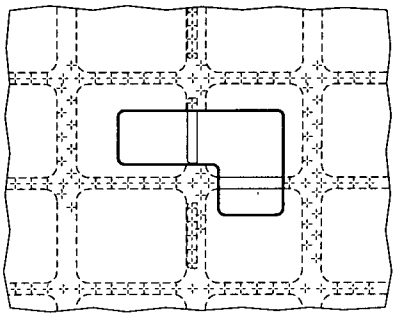

SKIN CUTOUT AT A SHEAR TIE AND ON A STRINGER SEE DETAIL IX

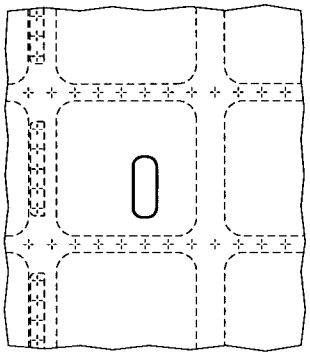

SKIN CUTOUT AT A SKIN POCKET AREA SEE DETAIL X

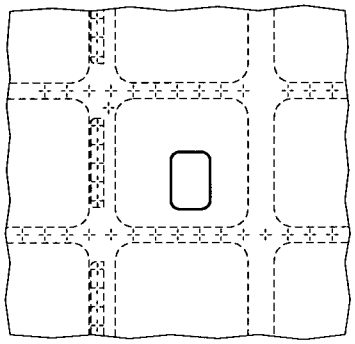

SKIN CUTOUT AT A POCKET AREA CLOSE TO A SHEAR TIE SEE DETAIL XI

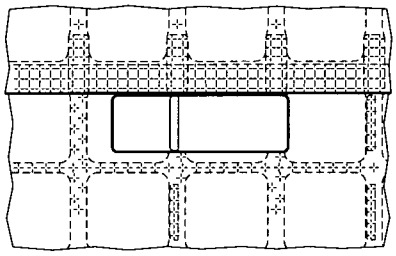

LOWER SKIN CUTOUT BELOW A LAP SPLICE (CUM LINE NUMBER 292 AND ON) SEE DETAIL XII

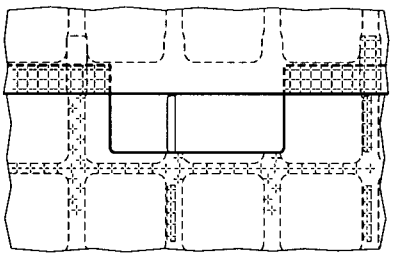

LOWER SKIN AND DOUBLER CUTOUT AT AND BELOW A LAP SPLICE (CUM LINE NUMBER 292 AND ON) SEE DETAIL XIII

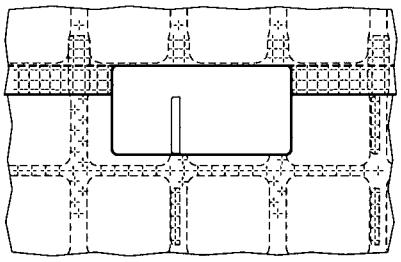

UPPER AND LOWER SKIN CUTOUT AT AND BELOW A LAP SPLICE (CUM LINE NUMBER 292 AND ON) SEE DETAIL XIV

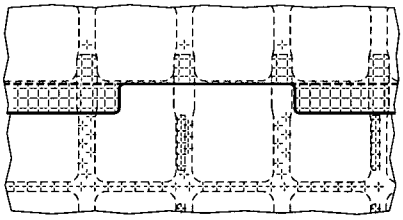

UPPER SKIN AND DOUBLER CUTOUT AT A LAP SPLICE (CUM LINE NUMBER 292 AND ON) SEE DETAIL XV

TYPICAL DAMAGE LOCATIONS
TABLE VII

General Fuselage Skin Repair
Figure 48 (Sheet 12)

BOEING PROPRIETARY - Copyright © - Unpublished Work - See title page for details.

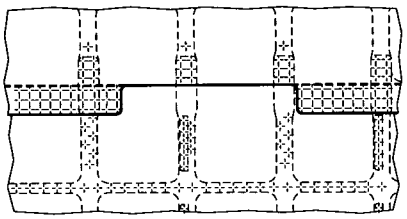

UPPER SKIN CUTOUT AT A LAP SPLICE (SKIN ONLY) (CUM LINE NUMBER 1 TO 291) SEE DETAIL XVI

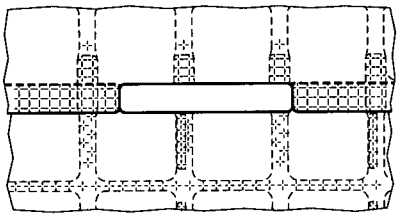

UPPER AND LOWER SKIN CUTOUT AT A LAP SPLICE (CUM LINE NUMBER 1 TO 291) SEE DETAIL XVII

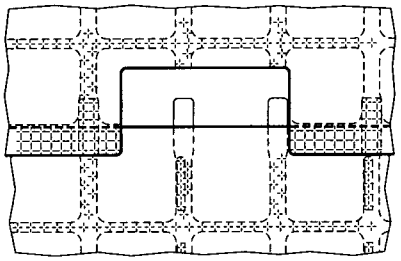

UPPER SKIN AND DOUBLER CUTOUT AT AND ABOVE A LAP SPLICE (CUM LINE NUMBER 292 AND ON) SEE DETAIL XVIII

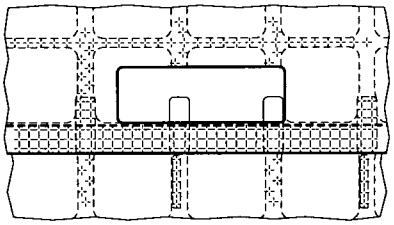

UPPER SKIN CUTOUT ABOVE A LAP SPLICE (CUM LINE NUMBER 292 AND ON) SEE DETAIL XIX

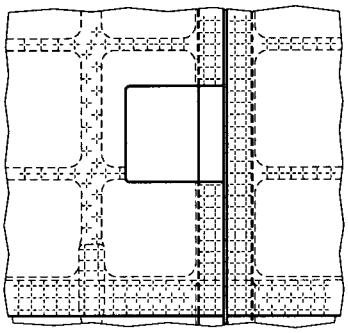

BS 360 AND 908 - UPPER SKIN CUTOUT AT A BUTT JOINT AND ABOVE A LAP SPLICE SEE DETAIL XX

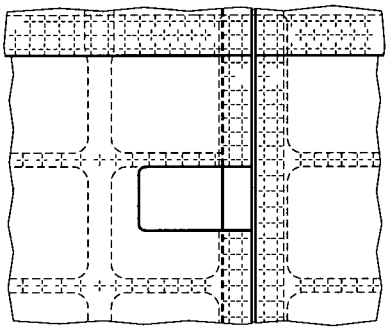

BS 360 AND 908 - LOWER SKIN CUTOUT AT A BUTT JOINT AND BELOW A LAP SPLICE SEE DETAIL XXI

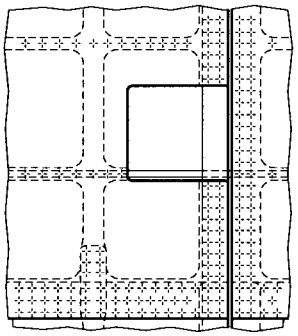

BS 540, 727 AND 1016 UPPER SKIN CUTOUT AT A BUTT JOINT AND ABOVE A LAP SPLICE SEE DETAIL XXII

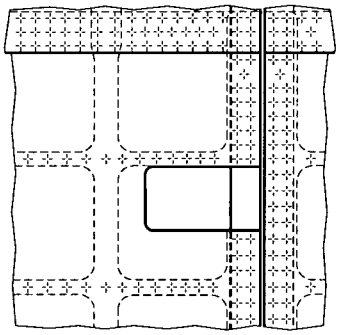

BS 540, 727 AND 1016 LOWER SKIN CUTOUT AT A BUTT JOINT AND BELOW A LAP SPLICE SEE DETAIL XXIII

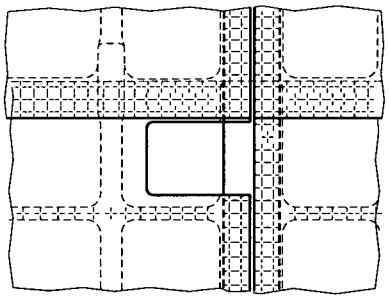

BS 360 AND 908 - LOWER SKIN CUTOUT AT A BUTT JOINT AND BELOW A LAP SPLICE (CUM LINE NUMBER 292 AND ON) SEE DETAIL XXIV

TYPICAL DAMAGE LOCATIONS
TABLE VII (CONTINUED)

General Fuselage Skin Repair
Figure 48 (Sheet 13)

BOEING PROPRIETARY - Copyright © - Unpublished Work - See title page for details.

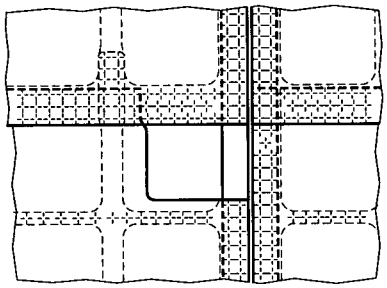

BS 360 AND 908 - LOWER SKIN CUTOUT AT A BUTT JOINT AND A LAP SPLICE (CUM LINE NUMBER 292 AND ON) SEE DETAIL XXV

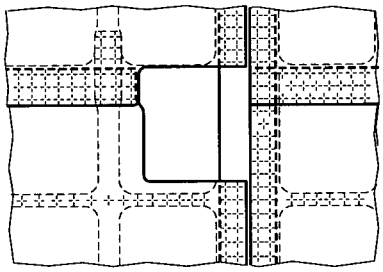

BS 360 AND 908 - UPPER AND LOWER SKIN CUTOUT AT A BUTT JOINT AND AT, AND BELOW A LAP SPLICE (CUM LINE NUMBER 292 AND ON) SEE DETAIL XXVI

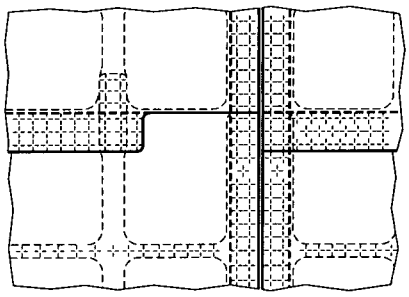

BS 360 AND 908 - UPPER SKIN CUTOUT AT A BUTT JOINT AND A LAP SPLICE (CUM LINE NUMBER 292 AND ON) SEE DETAIL XXVII

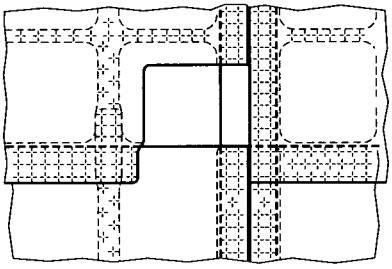

BS 360 AND 908 - UPPER SKIN CUTOUT AT A BUTT JOINT AND A LAP SPLICE (CUM LINE NUMBER 292 AND ON) SEE DETAIL XXVIII

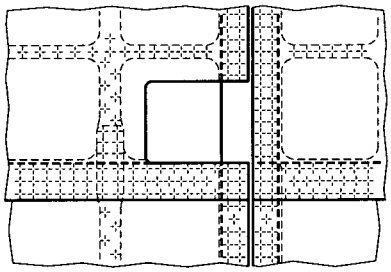

BS 360 AND 908 - UPPER SKIN CUTOUT AT A BUTT JOINT AND ABOVE A LAP SPLICE (CUM LINE NUMBER 292 AND ON) SEE DETAIL XXIX

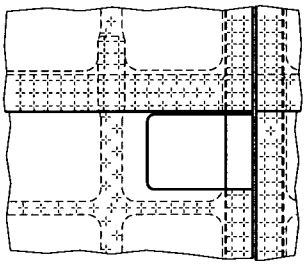

BS 540, 727 AND 1016 LOWER SKIN CUTOUT AT A BUTT JOINT AND BELOW A LAP SPLICE (CUM LINE NUMBER 292 AND ON) SEE DETAIL XXX

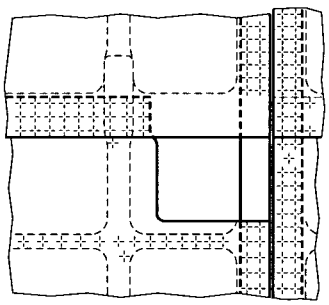

BS 540, 727 AND 1016 LOWER SKIN CUTOUT AT A BUTT JOINT AND AT A LAP SPLICE (CUM LINE NUMBER 292 AND ON) SEE DETAIL XXXI

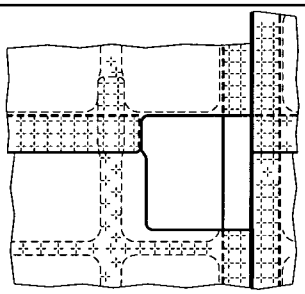

BS 540, 727 AND 1016 - UPPER AND LOWER SKIN CUTOUT AT A BUTT JOINT AND A LAP SPLICE (CUM LINE NUMBER 292 AND ON) SEE DETAIL XXXII

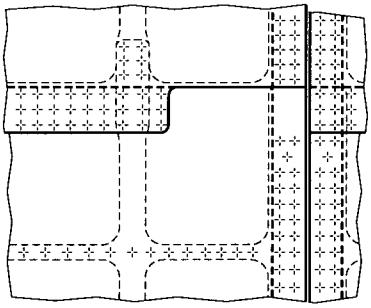

BS 540, 727 AND 1016 UPPER SKIN CUTOUT AT A BUTT JOINT AND A LAP SPLICE (CUM LINE NUMBER 292 AND ON) SEE DETAIL XXXIII

TYPICAL DAMAGE LOCATIONS
TABLE VII (CONTINUED)

General Fuselage Skin Repair
Figure 48 (Sheet 14)

BOEING PROPRIETARY - Copyright © - Unpublished Work - See title page for details.

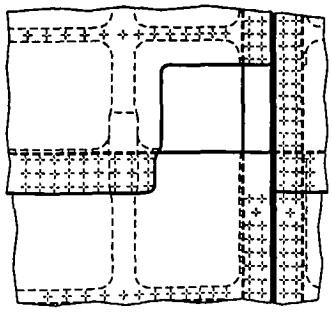 BS 540, 727 AND 1016 UPPER SKIN CUTOUT AT A BUTT JOINT AND AT AND ABOVE A LAP A LAP SPLICE (CUM LINE NUMBER 292 AND ON) SEE DETAIL XXXIV	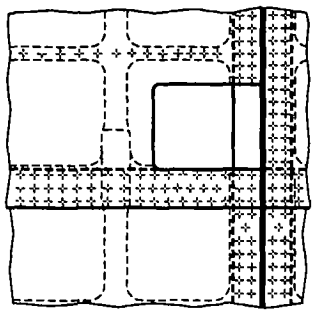 BS 540, 727 AND 1016 UPPER SKIN CUTOUT AT A BUTT JOINT ABOVE A LAP SPLICE (CUM LINE NUMBER 292 AND ON) SEE DETAIL XXXV	

TYPICAL DAMAGE LOCATIONS
TABLE VII (CONTINUED)

General Fuselage Skin Repair
Figure 48 (Sheet 15)

BOEING PROPRIETARY - Copyright © - Unpublished Work - See title page for details.

EXAMPLE OF HOW TO LAYOUT REPAIR DETAILS AND COMBINE REPAIRS

Part 1 : Introduction

Assume you have four damages (A, B, C and D) on the skin as shown below.

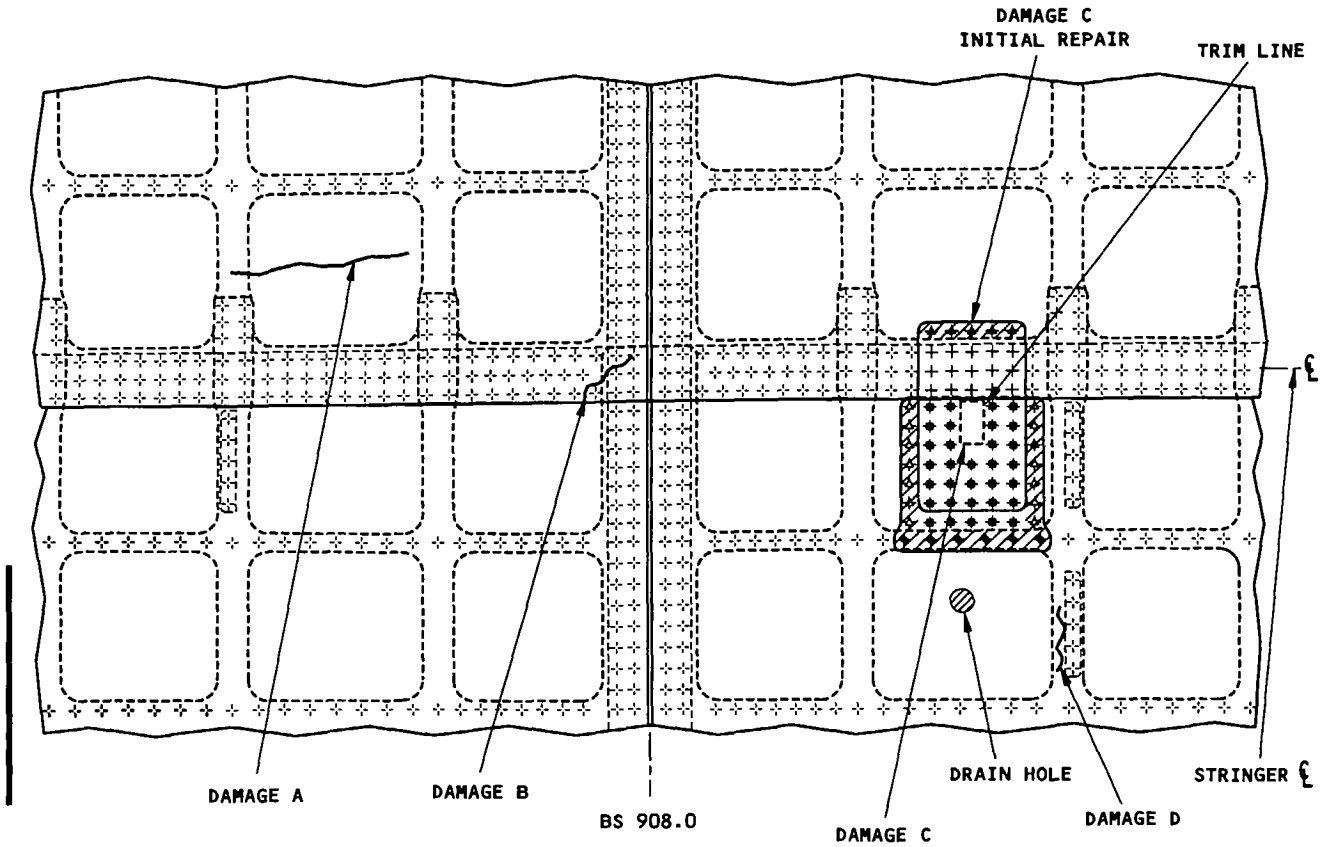

DAMAGE AREAS
ILLUSTRATION I

NOTES

- To make sure that your repair is structurally satisfactory, always obey the general repair rules as given in Flagnotes.
- Refer to Detail I - Repair Restriction Areas to determine if the damage can be repaired as given in this figure.

CRITICAL FASTENER ROW

General Fuselage Skin Repair
Figure 48 (Sheet 16)

BOEING PROPRIETARY - Copyright © - Unpublished Work - See title page for details.

Part 2: Repair Layout Procedure

1. Layout the trim lines around the damage.
2. Cutout the damage. Use a 0.50 inch minimum radius cut at the corners. Finish the cut edges to a smoothness of 63 microinch Ra or better.
3. Do the necessary inspections as given in this repair figure. Refer to Detail II to determine the Repair Zone and applicable repair details.
4. Check the thumbnail details to find what type of repair details apply to your damage. Refer to Table VII. Note the cum line number of your airplane to ensure that the repair applies.
   A. Damage "A" is in Zone 1 as shown in Detail II. The applicable repair details are Details VII thru IX. For Damage A, Detail VIII is the best fit (Damage is in between two stringers).
   B. Damage "B" is in both skins, at Zone 4 as shown in Detail II. The applicable repair details are Details XXIV thru XXXV. For Damage B, Detail XXVI is the best fit (Damage is in the skin lap splice and butt joint area).
   C. Damage "C" is in Zone 2 as shown in Detail II. The applicable repair details are Details XII thru XIX. For Damage C, Detail XII is the best fit (Damage is in the lower skin at a lap splice).
   D. Damage "D" is in Zone 1 as shown in Detail II. The applicable repair details are Details VII thru IX. For Damage D, Detail VIII is the best fit (Damage is in between two stringers).
   E. Use the details that you have chosen as a guide to layout actual repair details.
5. Keep a 2D minimum edge distance from the edge of the cutout and mark the first fastener grid line around the cutout (General Notes).
6. Use 5D-6D spacing and layout the fastener grid lines (General Notes).
7. Layout the repair fastener pattern. Use the basic structural rules that follow:
   A. Layout the doubler a minimum of four fastener rows beyond all sides of the cutout. [A]
   B. Layout the tripler a minimum of three fastener rows beyond all sides of the cutout. [B]
   C. If the doubler ends on a stringer or tear strap, extend the doubler a minimum of two fastener rows beyond the stringer and one fastener row beyond the tear strap. [C]
   D. Stagger the tear strap fasteners common to the repair doubler, tripler and tear strap. See Detail III through Detail VI for staggered fastener requirements. [D]
   E. If the repair doubler ends within 3 inches from the upper or lower row of the lap splice, then extend the repair doubler a minimum of three fastener rows beyond the lap splice. [E]
   F. If the tear strap has been cut, a minimum of five fasteners are needed common to the repair doubler, tear strap and tripler and a minimum of one additional fastener is needed common to the tear strap and doubler or structural filler. [F]
   G. Overdrive all the rivets in the outer row to a minimum of 1.4 rivet diameter.
   H. If the repair is at BS 360 and BS 908 the repair doubler must extend a minimum of 4 rows beyond the butt joint. [H]
   I. Inspect all initial fastener holes common to the repair for cracks.
   J. When replacing an initial repair:
      - Make sure that the previous internal repairs did not have countersunk fasteners which knife edged the skin.
      - HFEC inspect the outer row of fasteners for eye-brow or hole cracks as shown in Detail XXXIX.
      - Make sure that the fastener spacing and size are within the acceptable limits of Table VI.
      - Extend the new repair doubler or filler as applicable a minimum of 2 fastener rows beyond the critical row of the previous repair outer fastener row. [AE]
   K. The repair must stop a minimum of 0.5 inch before a longitudinal chem-milled step edge. This will permit you to do an external inspection of the chem-milled step. If the repair stops less than 0.5 inch before a longitudinal chem-milled step, extend the repair a minimum of two fastener rows past the longitudinal chem-milled step edge. This will give a failsafe load path if there were undetected initial cracks in the chem-milled step. [AI]

General Fuselage Skin Repair
Figure 48 (Sheet 17)

BOEING PROPRIETARY - Copyright © - Unpublished Work - See title page for details.

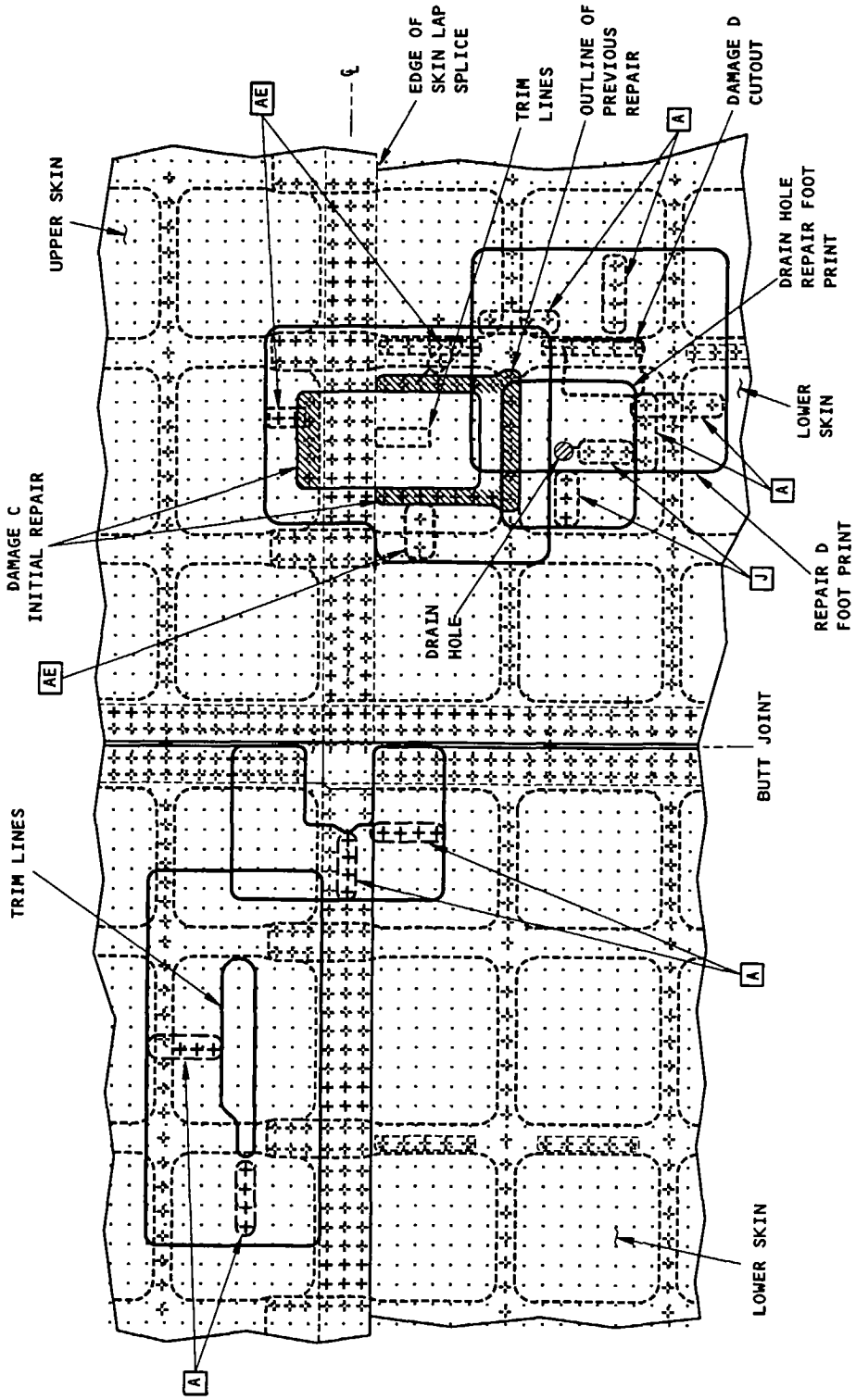

GRIDS AND BASIC REPAIR DOUBLERS LAYOUT
ILLUSTRATION II

General Fuselage Skin Repair
Figure 48 (Sheet 18)

BOEING PROPRIETARY - Copyright © - Unpublished Work - See title page for details.

Part 2: Repair Layout Procedure (Continued)

8. Layout the final repair doubler and tripler boundary. Use the additional refinement structural rules as follows:

   Damage A:

   A. Because the Damage "A" Doubler will end within 3 inches of the upper row of the skin lap splice, extend the lower fastener row a minimum of 3 fastener rows below the skin lap splice (Flagnote E).

   B. Because the Damage "A" Doubler extends below the skin lap splice and the two structural fillers are providing tapering (steps), end the doubler and tripler lower fastener rows on the same row (Flagnote J).

   C. Because the Damage "A" doubler ends on a stringer fastener line, extend the upper fastener row of the doubler two rows above the stringer centerline (Flagnote C). Extend the tripler to one row less than the doubler. This will permit inspection of the critical fastener row.

   D. Extend the edge of the Part 6 (Filler) a minimum of one fastener row beyond the edge of repair Part 1 (Doubler) in the circumferantial direction (Flagnote P). Extend the edge of the Part 5 (Filler) one fastener row beyond the edge of Part 6 (Filler) (Flagnote Q).

   E. Because the tear strap cutout has no shear tie, layout the fastener pattern for internal doubler installation (Flagnote R).

   F. Extend the edge of the part 1 (Doubler) a minimum of two fastener rows beyond the chem-milled step in the circumferential direction. AI

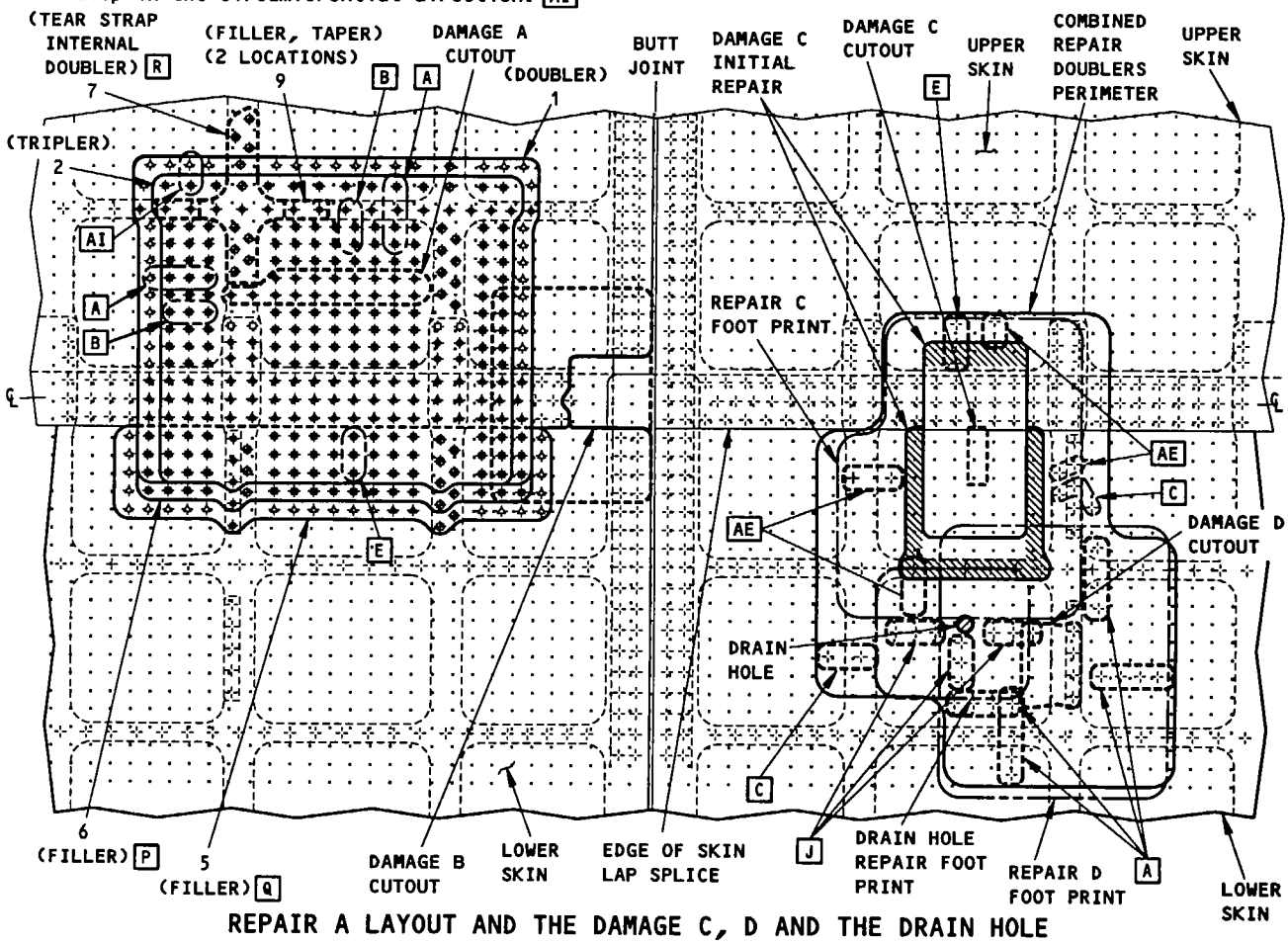

REPAIR A LAYOUT AND THE DAMAGE C, D AND THE DRAIN HOLE REPAIR FOOT PRINT (ALL NECESSARY RULES ARE APPLIED)

General Fuselage Skin Repair
Figure 48 (Sheet 19)

BOEING PROPRIETARY - Copyright © - Unpublished Work - See title page for details.

Part 2: Repair Layout Procedure (Continued)

Damage B:

A. Because the Damage "B" Doubler is in the skin butt joint area at BS 908.0, extend the doubler a minimum of 4 fastener rows beyond the skin butt joint [H].

B. Because the Damage "B" Doubler extends below the skin lap splice and the two structural fillers provide tapering (steps), end the doubler and tripler lower fastener rows on the same row.

C. Extend the edge of the Part 6 (Filler) a minimum of one fastener row beyond the edge of the Part 1 (Doubler) in the circumferential direction [P]. Extend the edge of the Part 5 (Filler) one fastener row beyond the edges of the Part 1 (Doubler) and Part 6 (Filler) [Q].

Damage C:

A. Because the upper fastener row of the Damage C doubler is in the skin lap splice zone, extend the upper fastener row a minimum of 3 fastener rows above the skin lap splice [E].

B. Because the Damage C doubler extends below the skin lap splice, end the doubler and tripler lower fastener rows on the same row.

C. Extend the edge of the Part 6 (Filler) one fastener row beyond the edge of the Part 1 (Doubler) in the circumferential direction [P]. Extend the edge of the Part 5 (Filler) one fastener row beyond the edges of the Part 6 (Filler) [Q].

D. Extend the edge of the part 1 (Doubler) a minimum of two fastener rows beyond the chem-milled step in the circumferential direction. [AI]

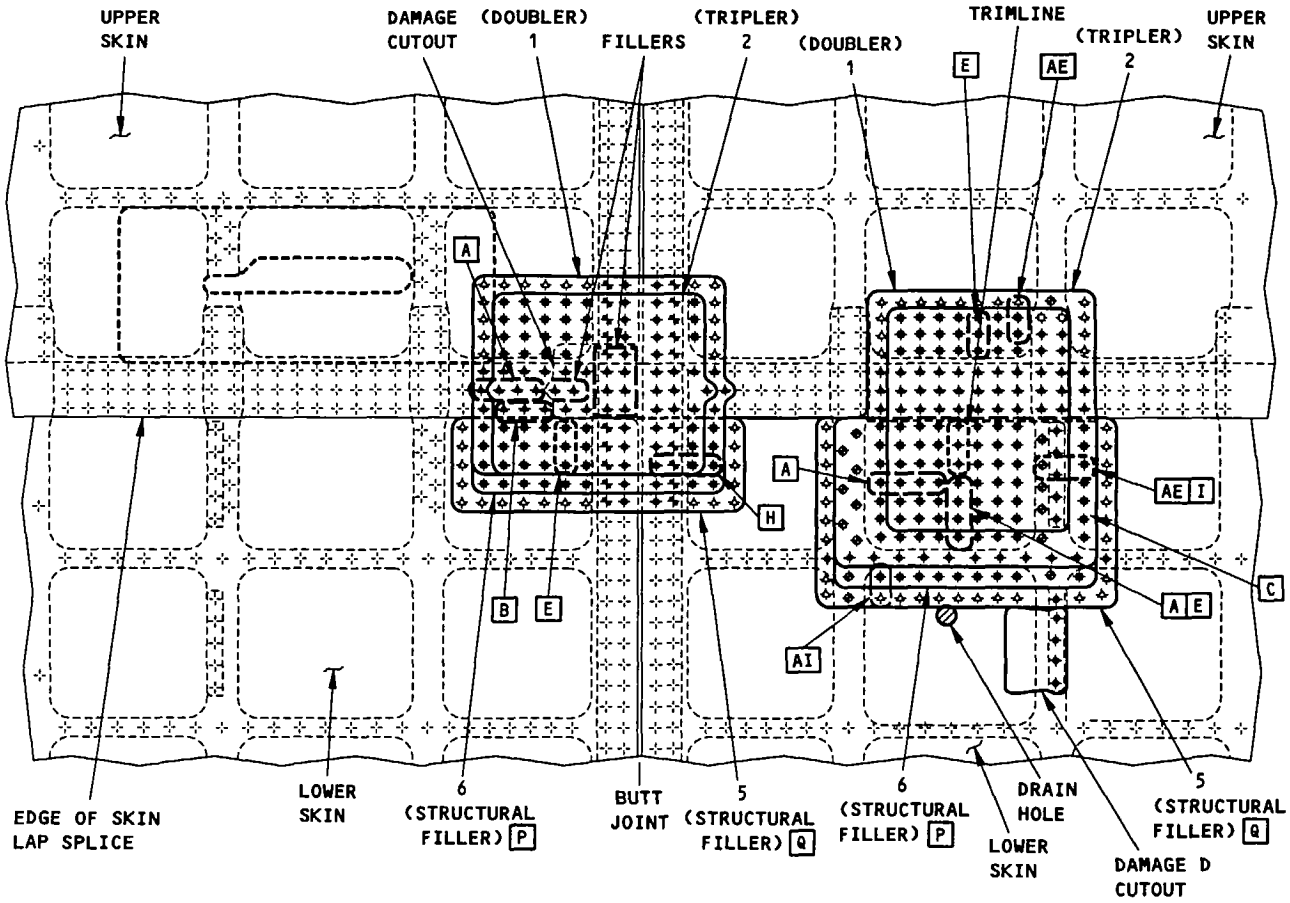

REPAIR B AND C - PARTS AND FASTENERS LAYOUT
ILLUSTRATION IV

General Fuselage Skin Repair
Figure 48 (Sheet 20)

BOEING PROPRIETARY - Copyright © - Unpublished Work - See title page for details.

Part 2: Repair Layout Procedure (Continued)

Damage D:

A. Enlarge the damage cutout to permit the installation of two row of fasteners on the structural filler. [AF]

B. Because the initial drain hole is covered by this repair, extend the repair parts a minimum of 3 fasteners all around the drain hole. [J]

9. Damage A and Damage B, and Damage C and Damage D overlap as shown in Illustration V. Therefore, each pair of these repairs must be combined to make two repairs as shown in Illustration VI. [O]

10. Use the chosen details at Step 4 as a guide and apply the other flagnotes as given in the detail as necessary.

11. Before you install the repair parts, inspect the inital open holes common to the repair as given in this repair, Procedures I through VII.

12. Make and install the repair parts as given in the repair procedure.

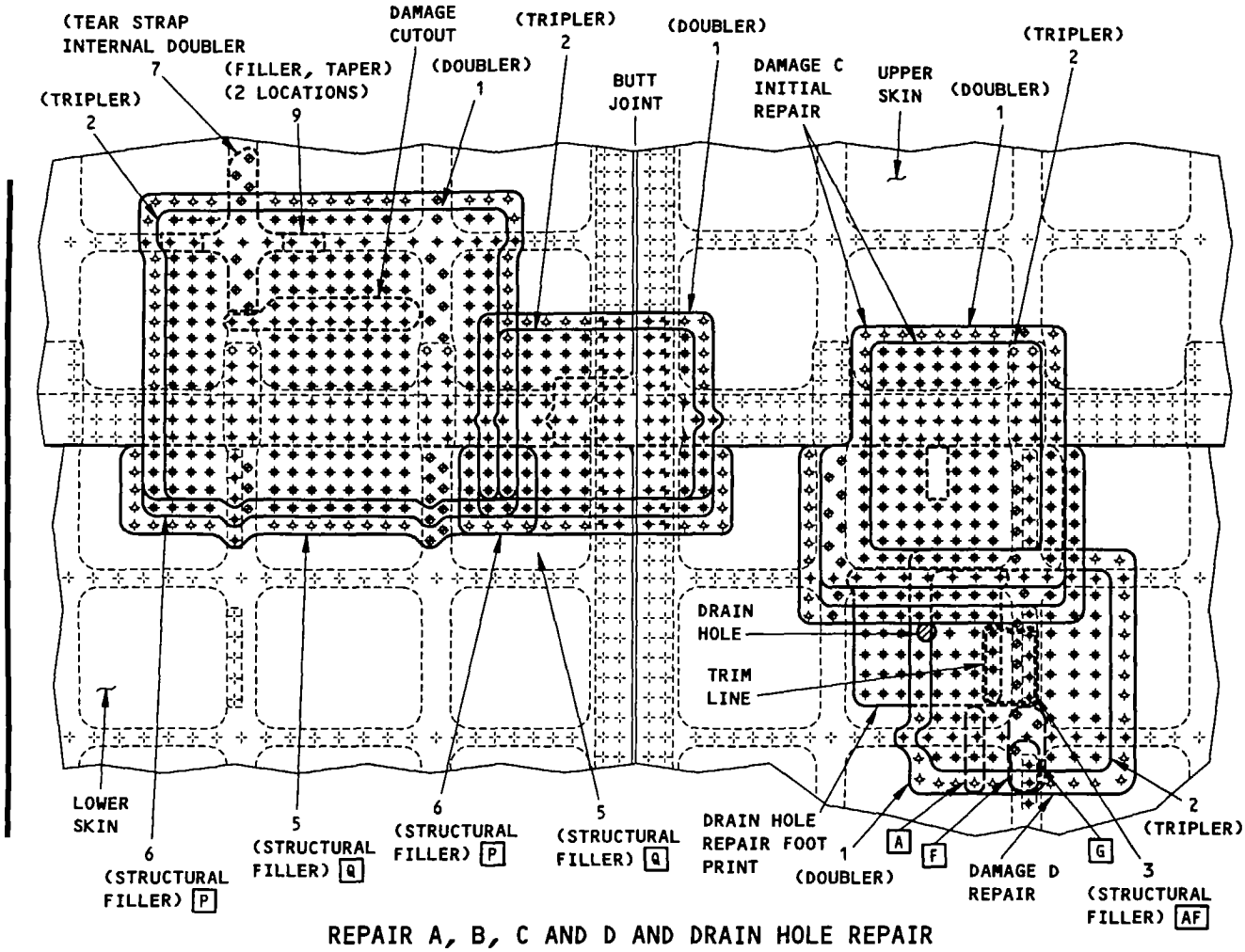

REPAIR A, B, C AND D AND DRAIN HOLE REPAIR
ILLUSTRATION V

General Fuselage Skin Repair
Figure 48 (Sheet 21)

BOEING PROPRIETARY - Copyright © - Unpublished Work - See title page for details.

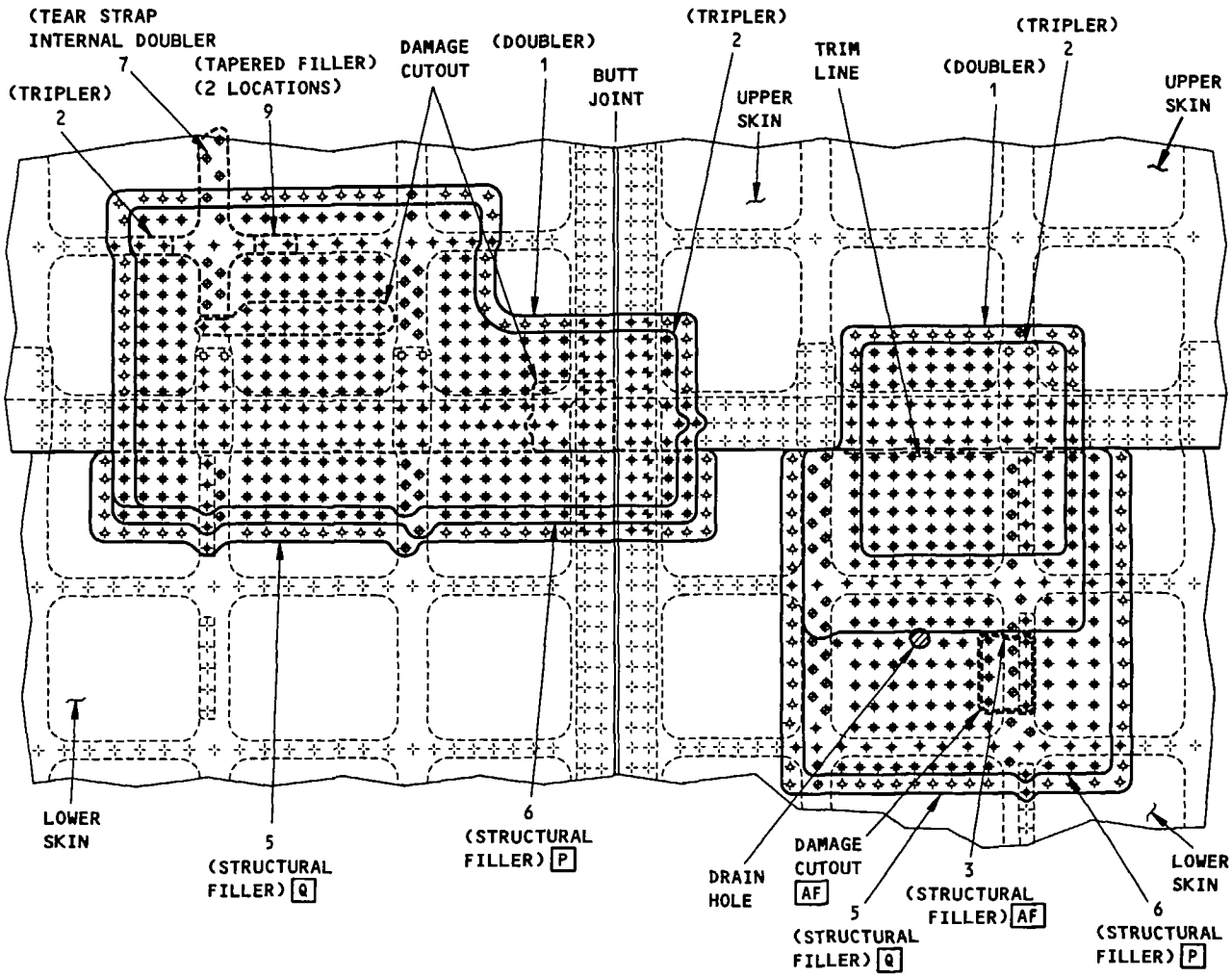

REPAIR A, B, C AND D COMPLETED
ILLUSTRATION VI

General Fuselage Skin Repair
Figure 48 (Sheet 22)

BOEING PROPRIETARY - Copyright © - Unpublished Work - See title page for details.

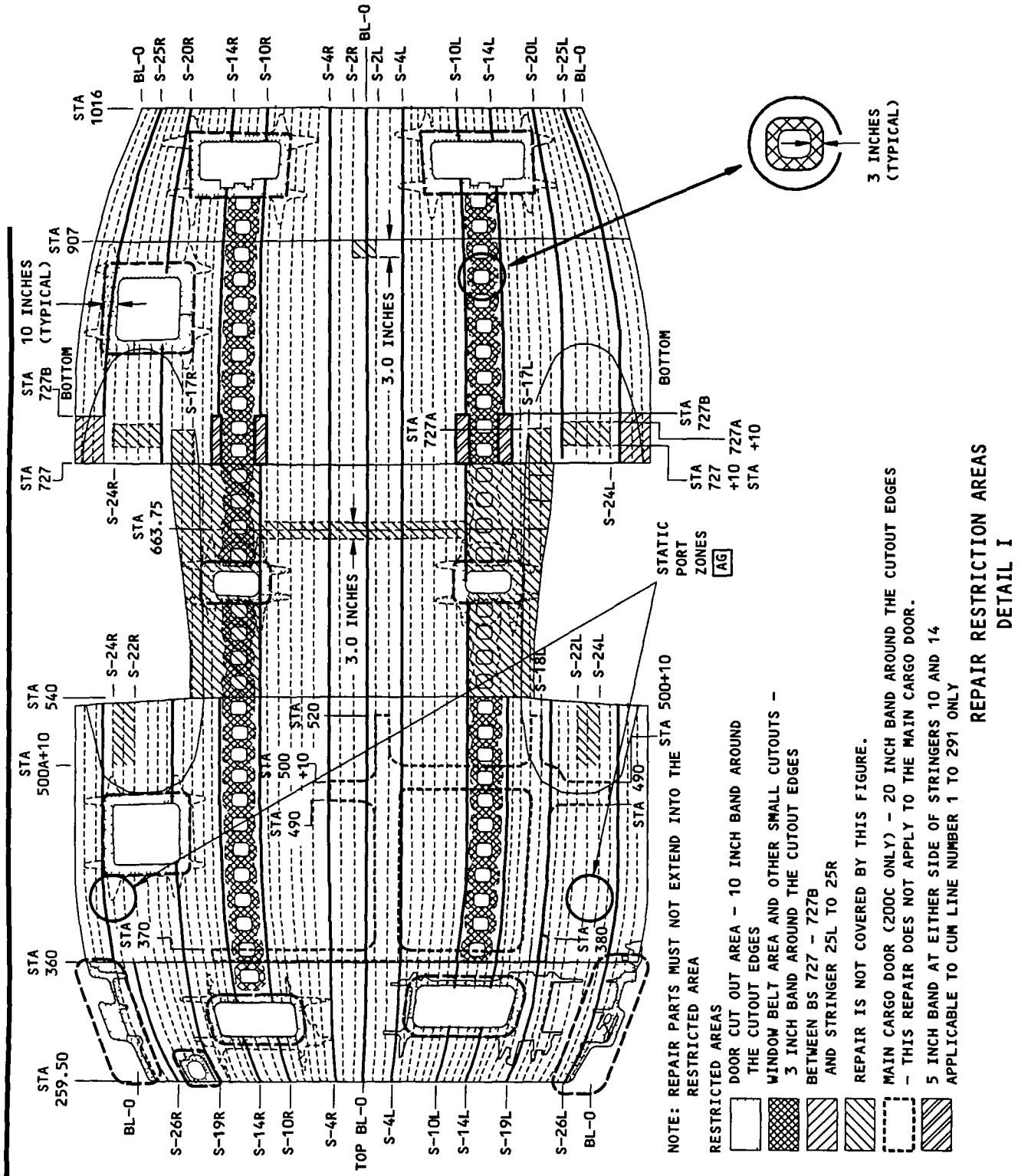

General Fuselage Skin Repair
Figure 48 (Sheet 23)

BOEING PROPRIETARY - Copyright © - Unpublished Work - See title page for details.

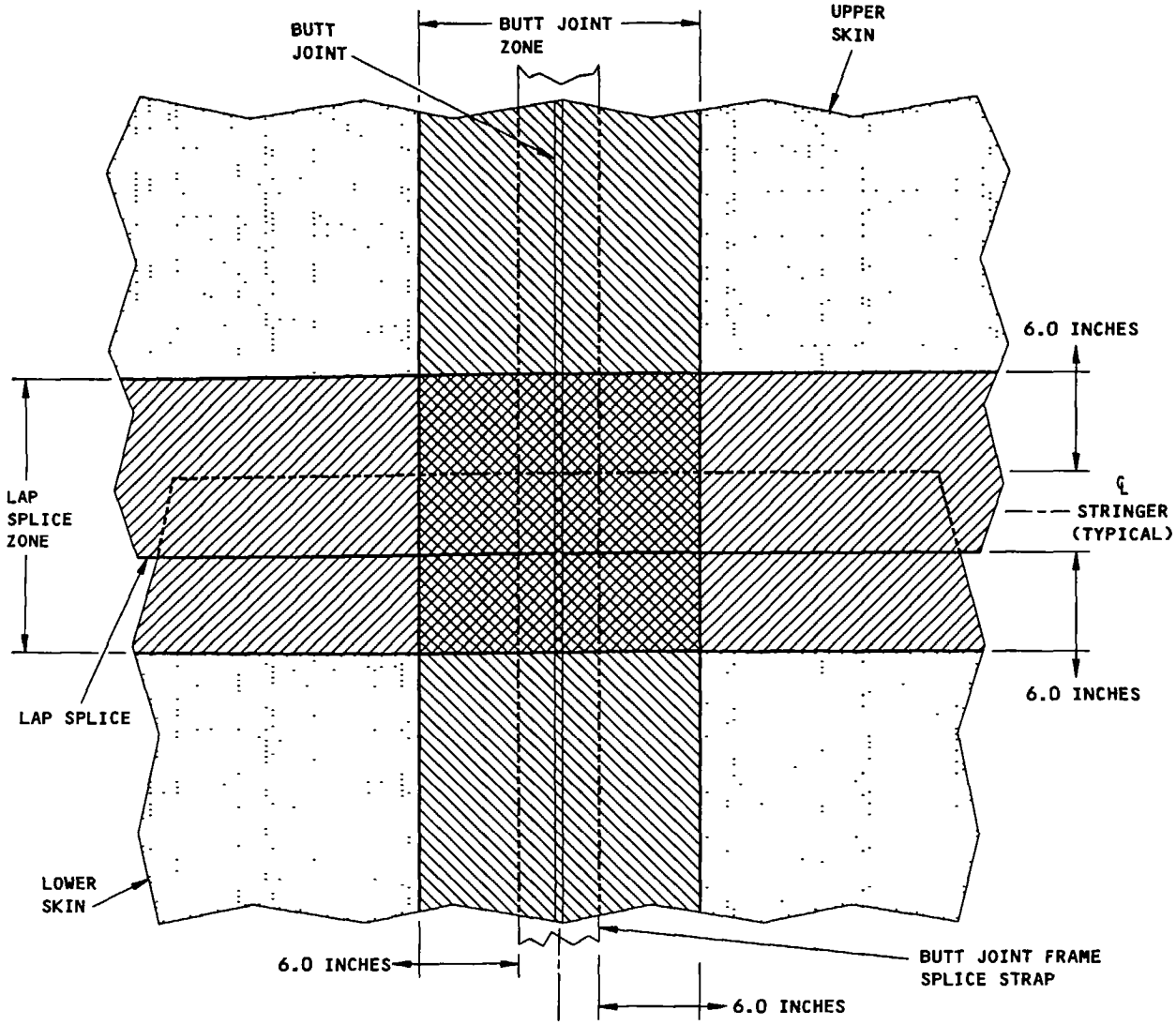

ZONE 1 FUSELAGE SKIN, CONTAINS NO LAP SPLICE AND BUTT JOINT. REFER TO DETAILS VII THRU XI FOR REPAIRS AND DETAIL I FOR RESTRICTION AREAS.

ZONE 2 LAP SPLICE, CONTAINS NO BUTT JOINT. REFER TO DETAILS XII THRU XIX FOR REPAIRS AND DETAIL I FOR RESTRICTION AREAS.

ZONE 3 BUTT JOINT, CONTAINS NO LAP SPLICE. REFER TO DETAILS XX THRU XXIII FOR REPAIRS AND DETAILS I FOR RESTRICTION AREAS.

ZONE 4 LAP SPLICE AND BUTT JOINT INTERSECTION. REFER TO DETAILS XXIV THRU XXXV FOR REPAIRS AND DETAIL I FOR RESTRICTION AREAS.

NOTE: IF ANY REPAIR CROSSES TO OTHER REPAIR ZONES THEN USE A COMBINATION OF DETAILS MERGED TOGETHER. (SEE EXAMPLE REPAIR FOR AN EXAMPLE OF HOW TO COMBINE REPAIRS.)

REPAIR ZONES BOUNDARIES
DETAIL II

General Fuselage Skin Repair
Figure 48 (Sheet 24)

BOEING PROPRIETARY - Copyright © - Unpublished Work - See title page for details.

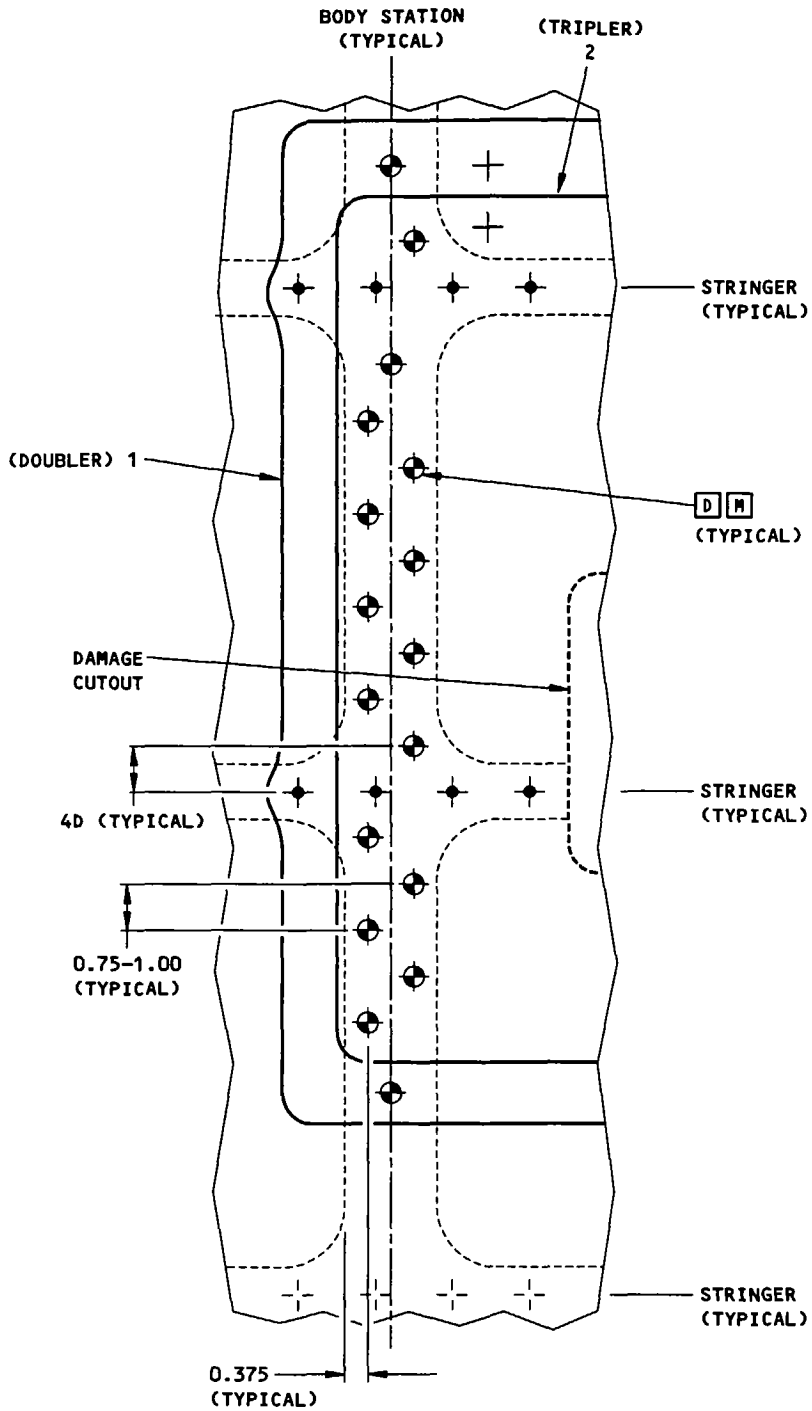

STAGGERED TEAR STRAP FASTENER LAYOUT AWAY FROM A CUTOUT

DETAIL III

General Fuselage Skin Repair
Figure 48 (Sheet 25)

BOEING PROPRIETARY - Copyright © - Unpublished Work - See title page for details.

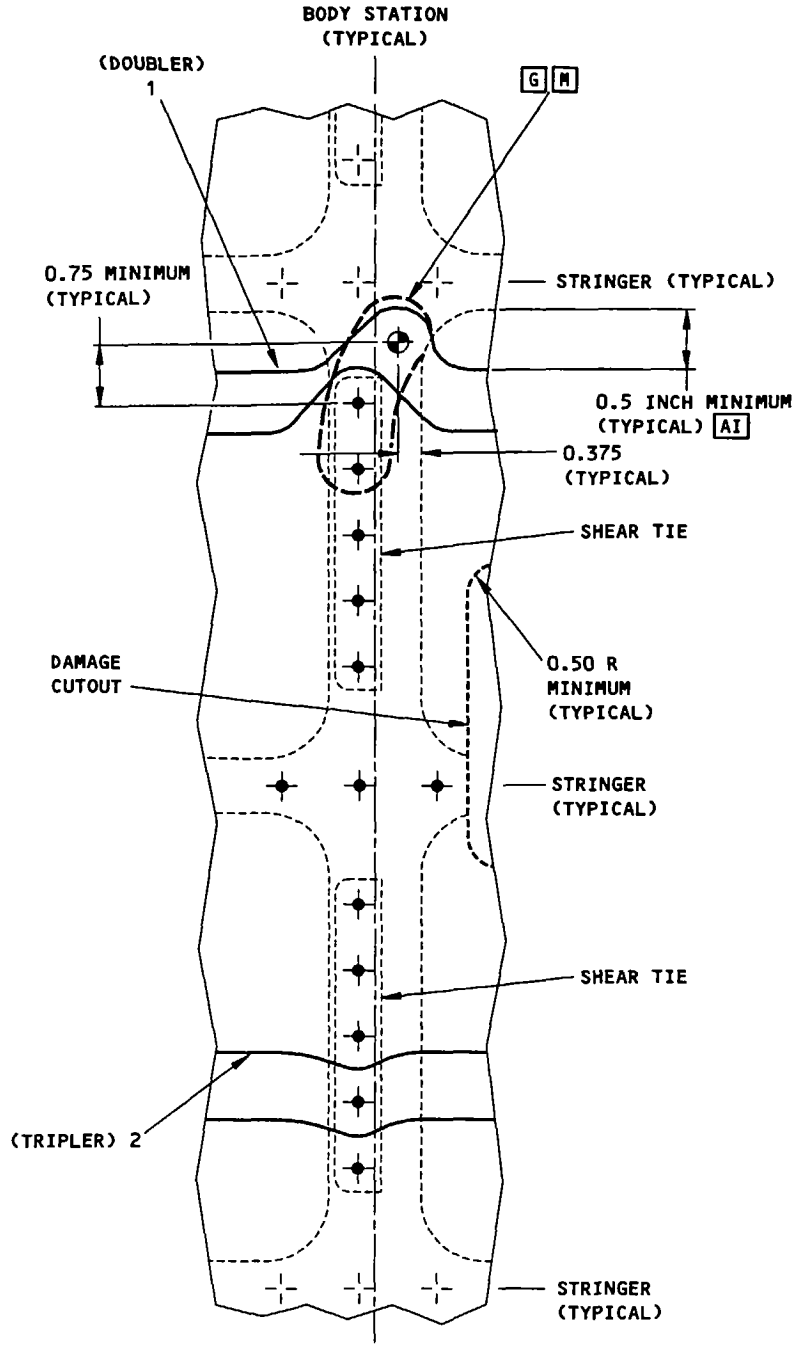

STAGGERED TEAR STRAP FASTENER LAYOUT AWAY FROM A CUTOUT AND COMMON TO A SHEAR TIES
DETAIL IV

General Fuselage Skin Repair
Figure 48 (Sheet 26)

BOEING PROPRIETARY - Copyright © - Unpublished Work - See title page for details.

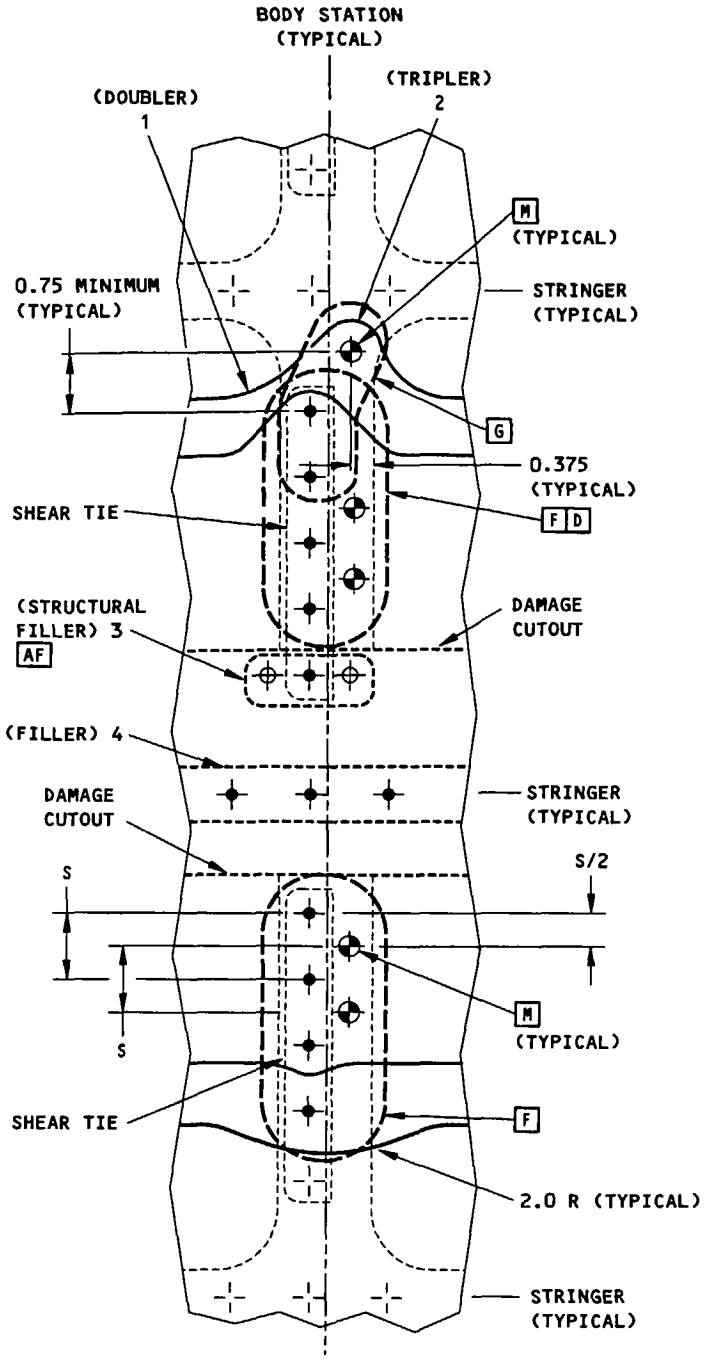

STAGGERED TEAR STRAP FASTENER LAYOUT ABOVE OR BELOW
A TEARSTRAP CUTOUT AND COMMON TO A SHEAR TIES
DETAIL V

General Fuselage Skin Repair
Figure 48 (Sheet 27)

BOEING PROPRIETARY - Copyright © - Unpublished Work - See title page for details.

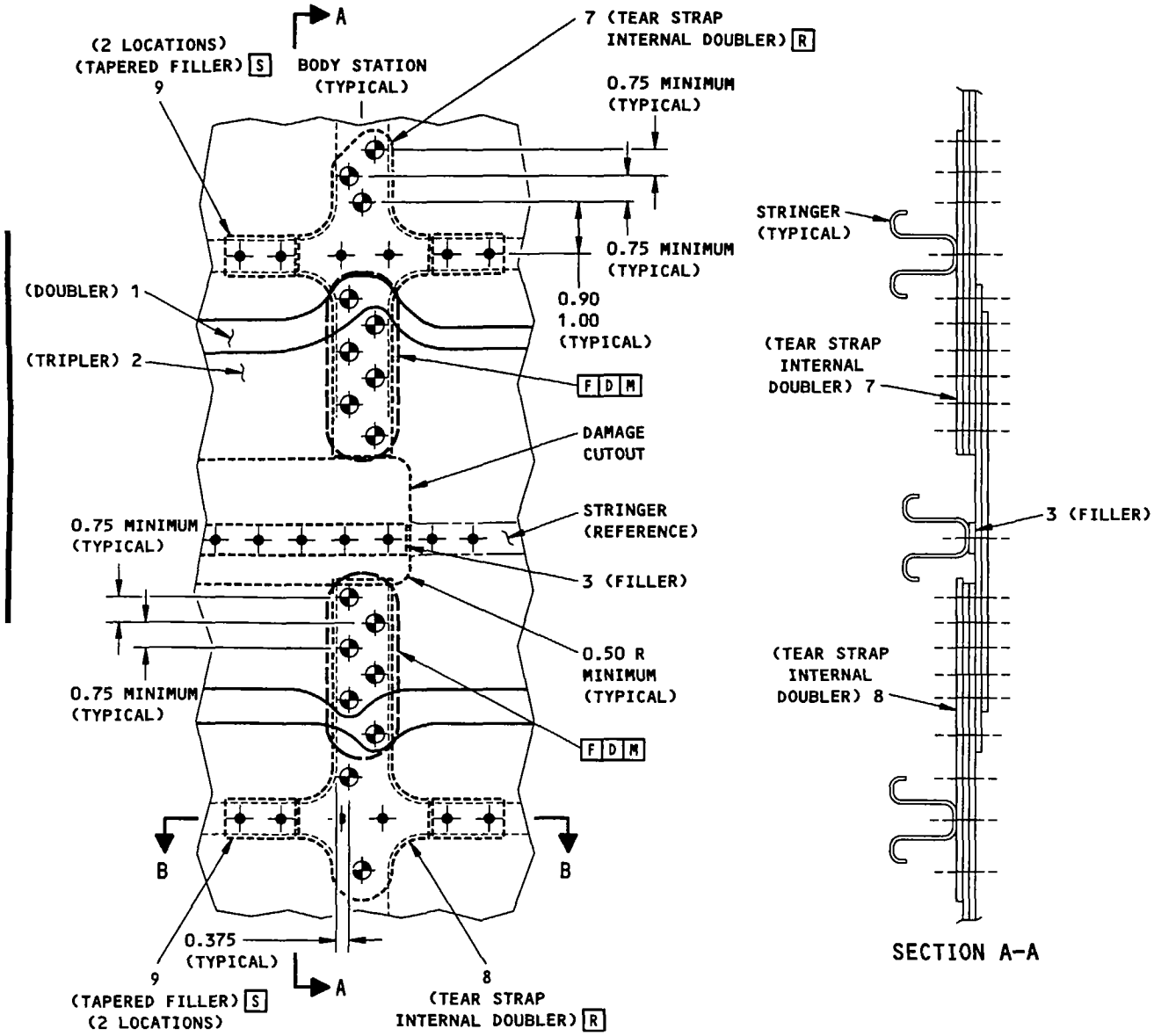

TEAR STRAP INTERNAL DOUBLER AND STAGGERED FASTENER
LAYOUT AT ABOVE OR BELOW TEAR STRAP CUTOUT
(NO SHEAR TIE)
DETAIL VI

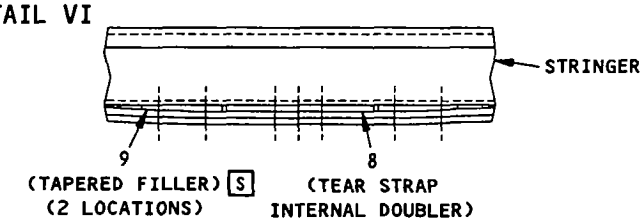

SECTION B-B

General Fuselage Skin Repair
Figure 48 (Sheet 28)

BOEING PROPRIETARY - Copyright © - Unpublished Work - See title page for details.

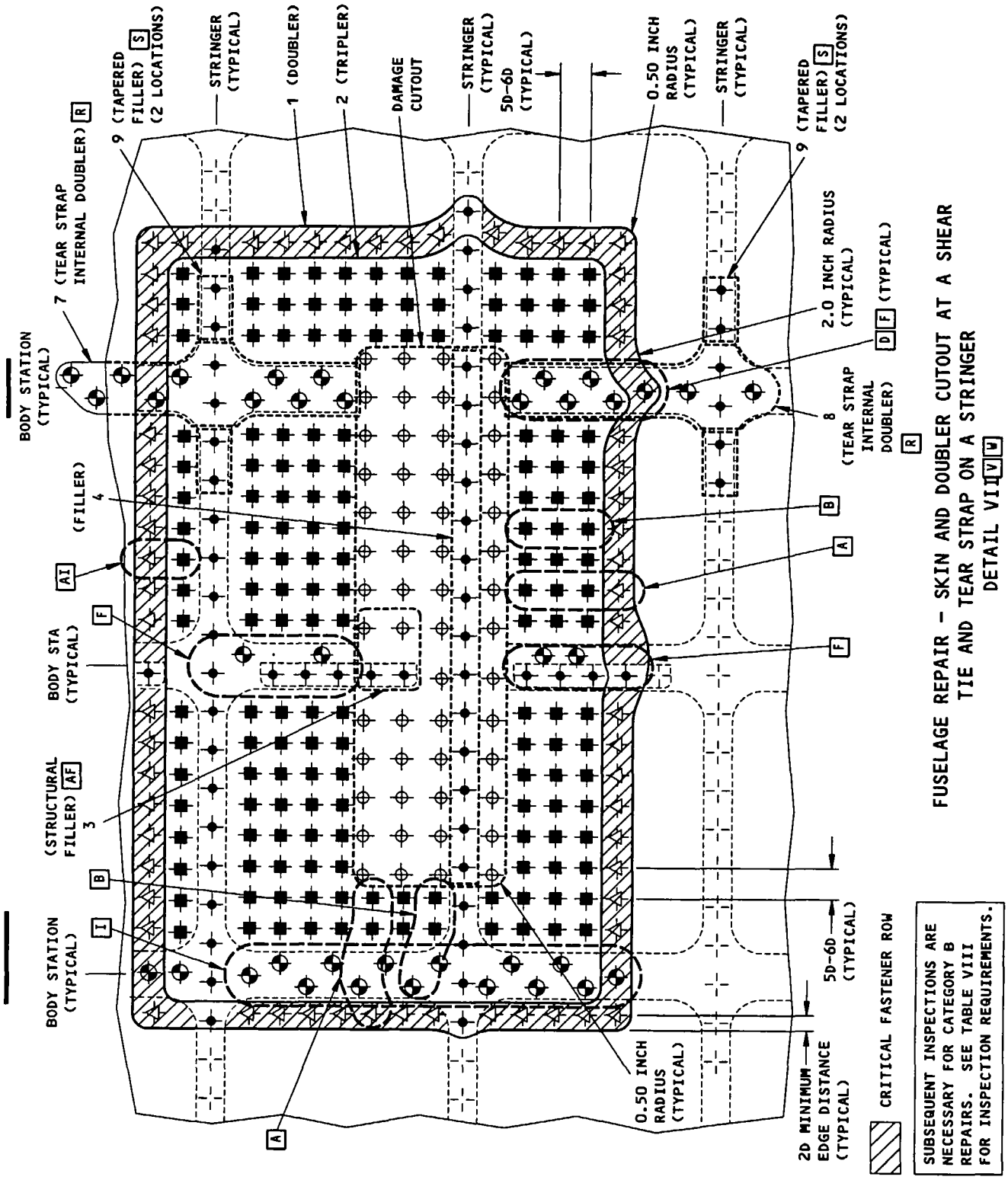

General Fuselage Skin Repair
Figure 48 (Sheet 29)

BOEING PROPRIETARY - Copyright © - Unpublished Work - See title page for details.

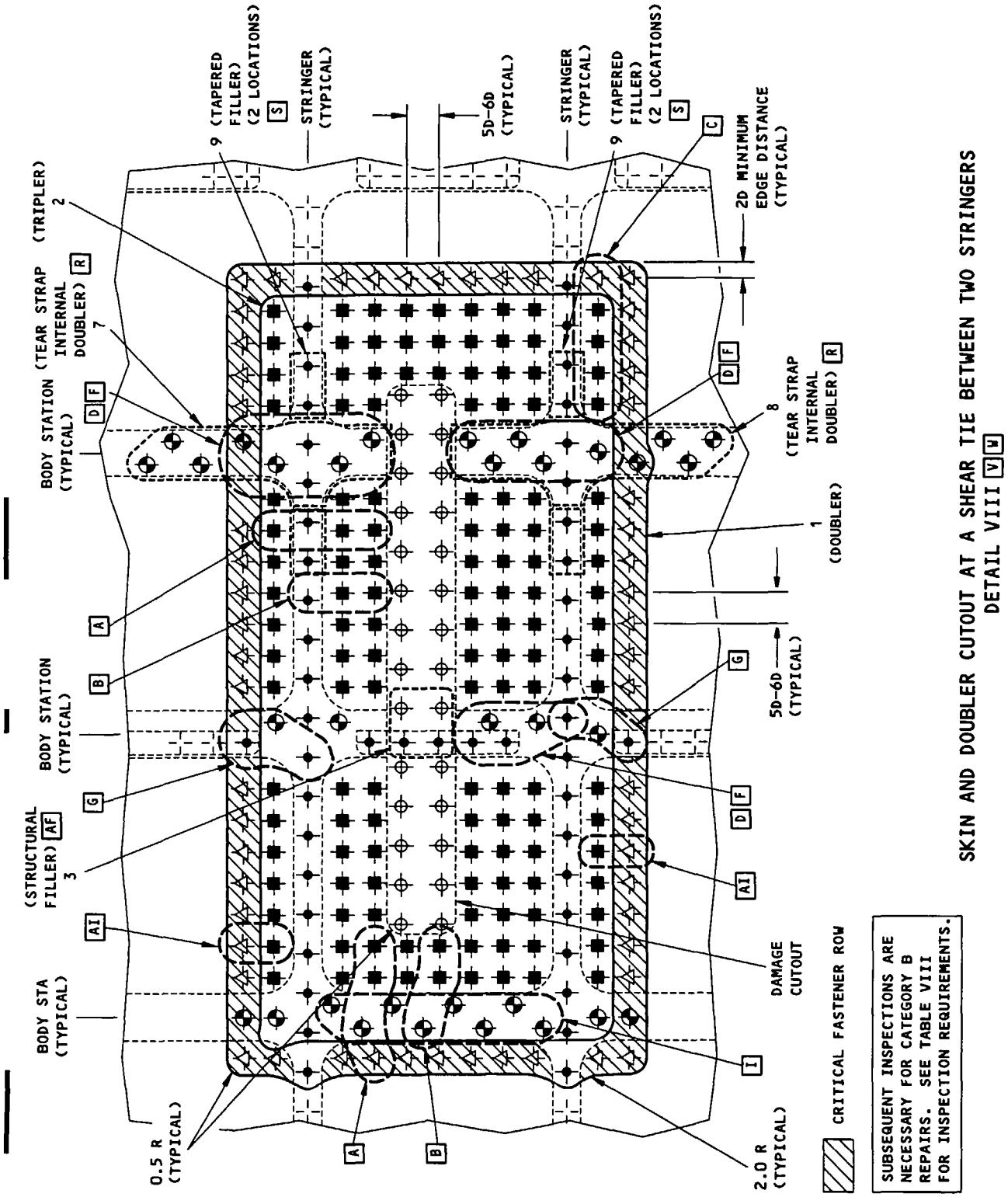

General Fuselage Skin Repair
Figure 48 (Sheet 30)

BOEING PROPRIETARY - Copyright © - Unpublished Work - See title page for details.

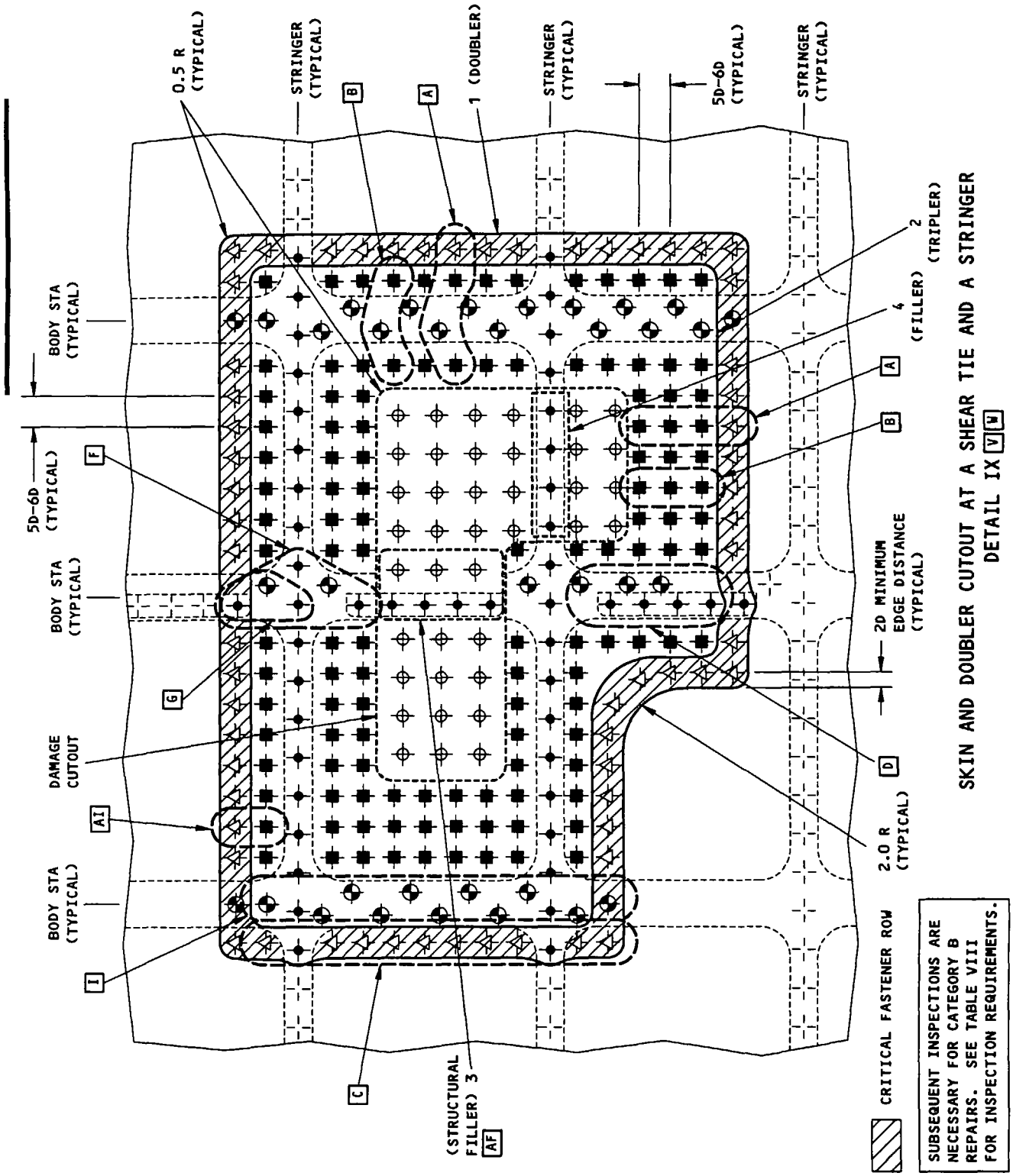

General Fuselage Skin Repair
Figure 48 (Sheet 31)

BOEING PROPRIETARY - Copyright © - Unpublished Work - See title page for details.

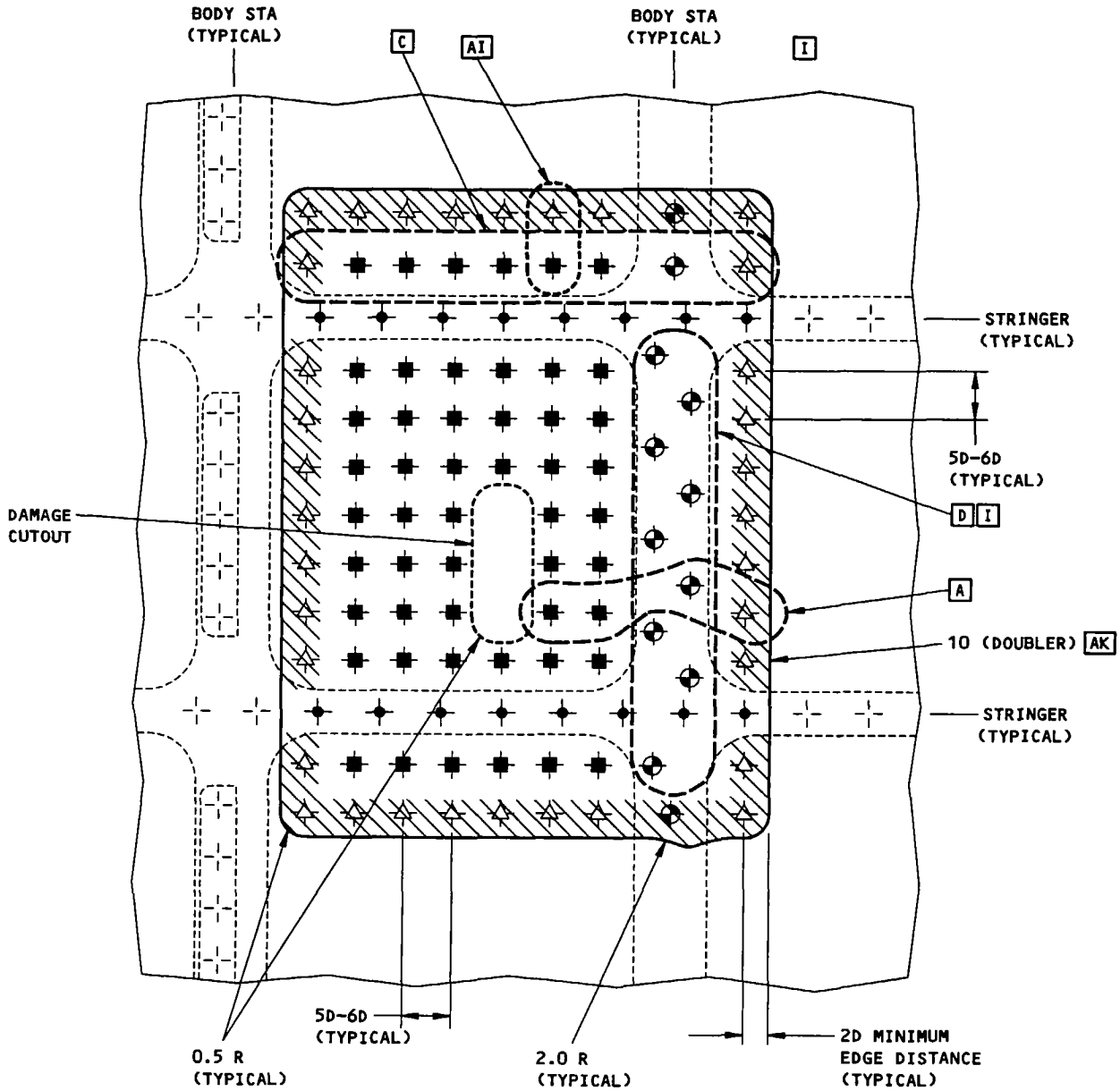

CRITICAL FASTENER ROW

SUBSEQUENT INSPECTIONS ARE NECESSARY FOR CATEGORY B REPAIRS. SEE TABLE VIII FOR INSPECTION REQUIREMENTS.

SKIN CUTOUT AT A SKIN POCKET AREA
DETAIL X V W

General Fuselage Skin Repair
Figure 48 (Sheet 32)

BOEING PROPRIETARY - Copyright © - Unpublished Work - See title page for details.

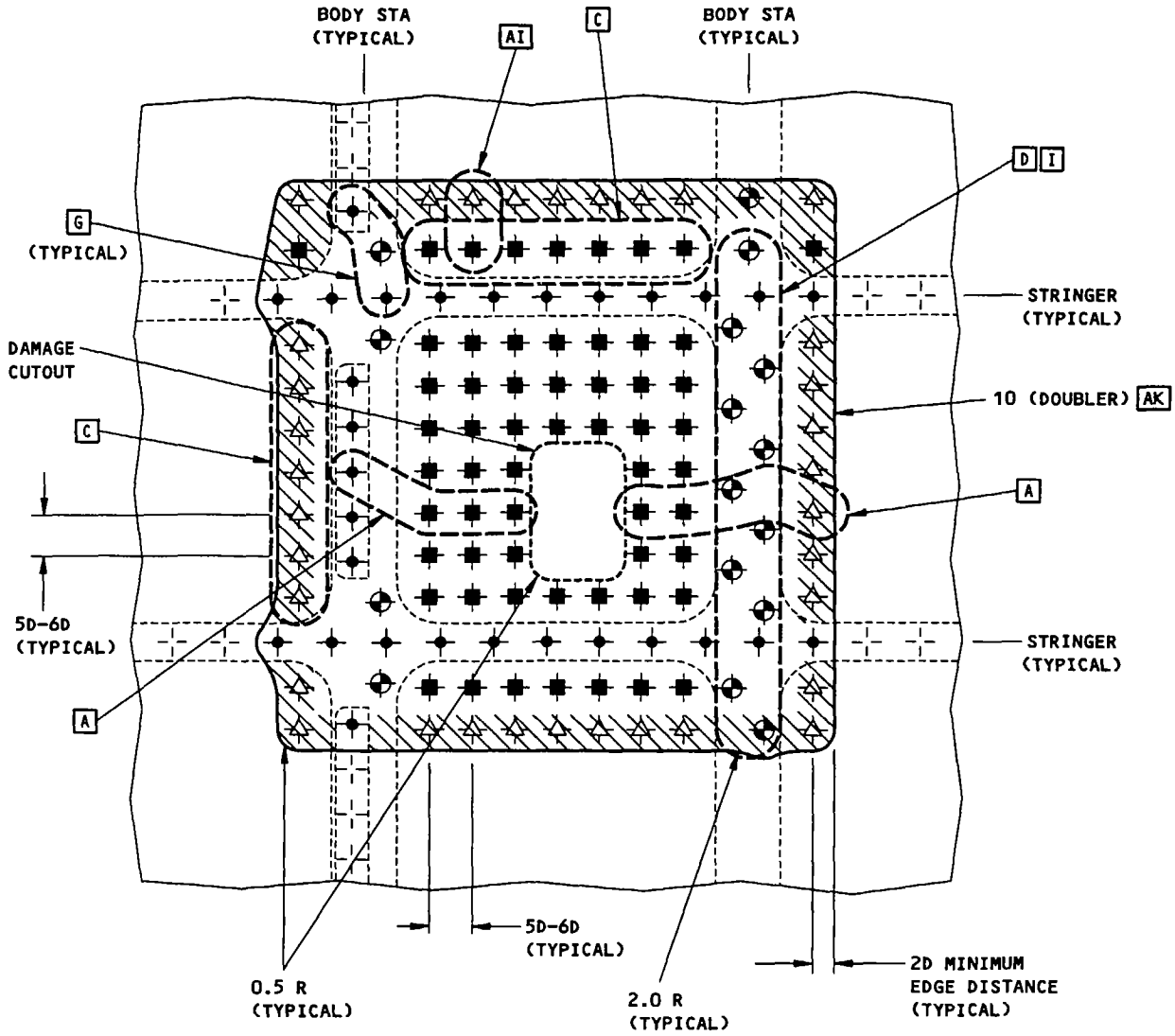

CRITICAL FASTENER ROW

SUBSEQUENT INSPECTIONS ARE NECESSARY FOR CATEGORY B REPAIRS. SEE TABLE VIII FOR INSPECTION REQUIREMENTS.

SKIN CUTOUT AT A POCKET AREA CLOSE TO A SHEAR TIE
DETAIL XI V W

General Fuselage Skin Repair
Figure 48 (Sheet 33)

BOEING PROPRIETARY - Copyright © - Unpublished Work - See title page for details.

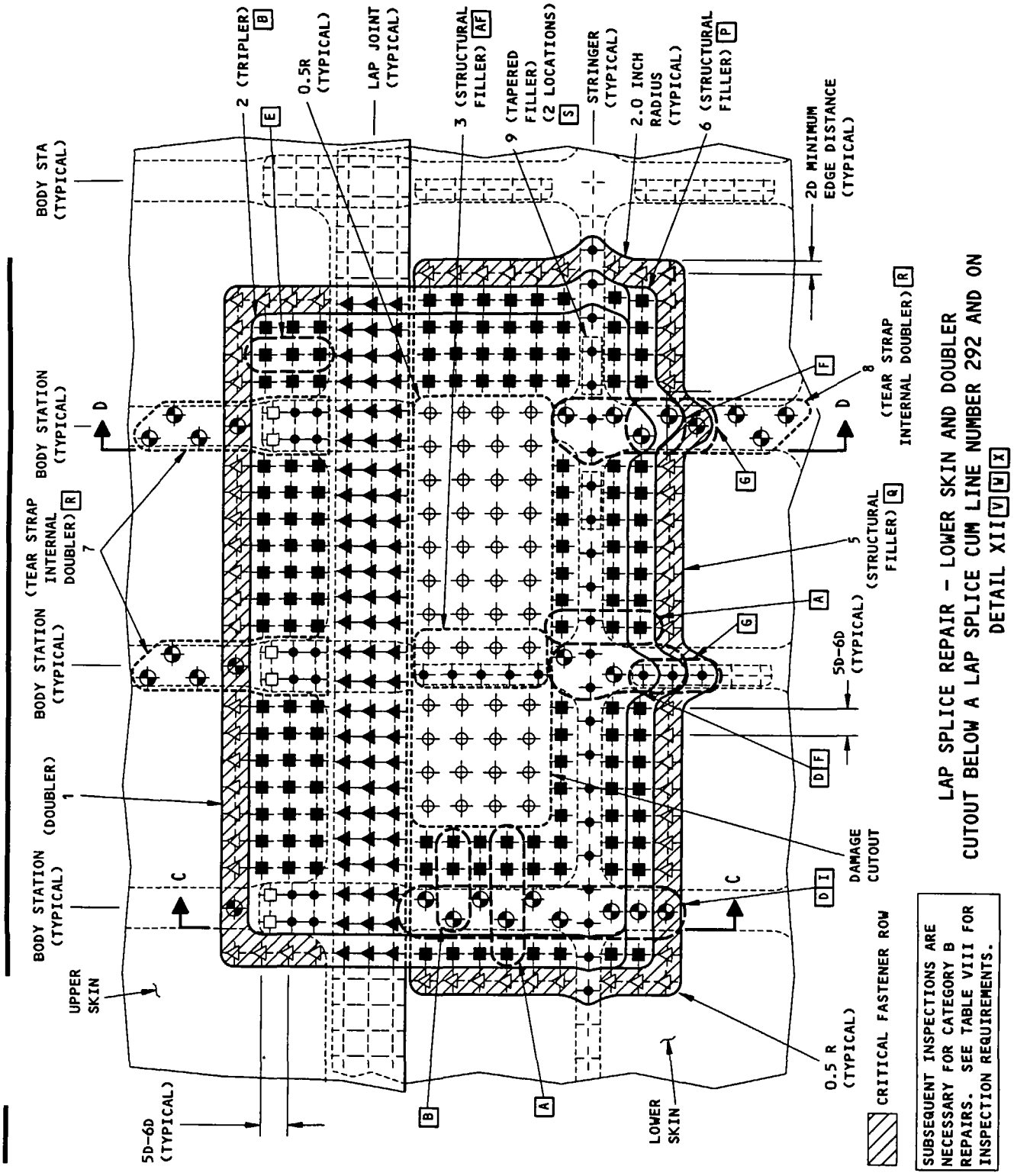

General Fuselage Skin Repair
Figure 48 (Sheet 34)

BOEING PROPRIETARY - Copyright © - Unpublished Work - See title page for details.

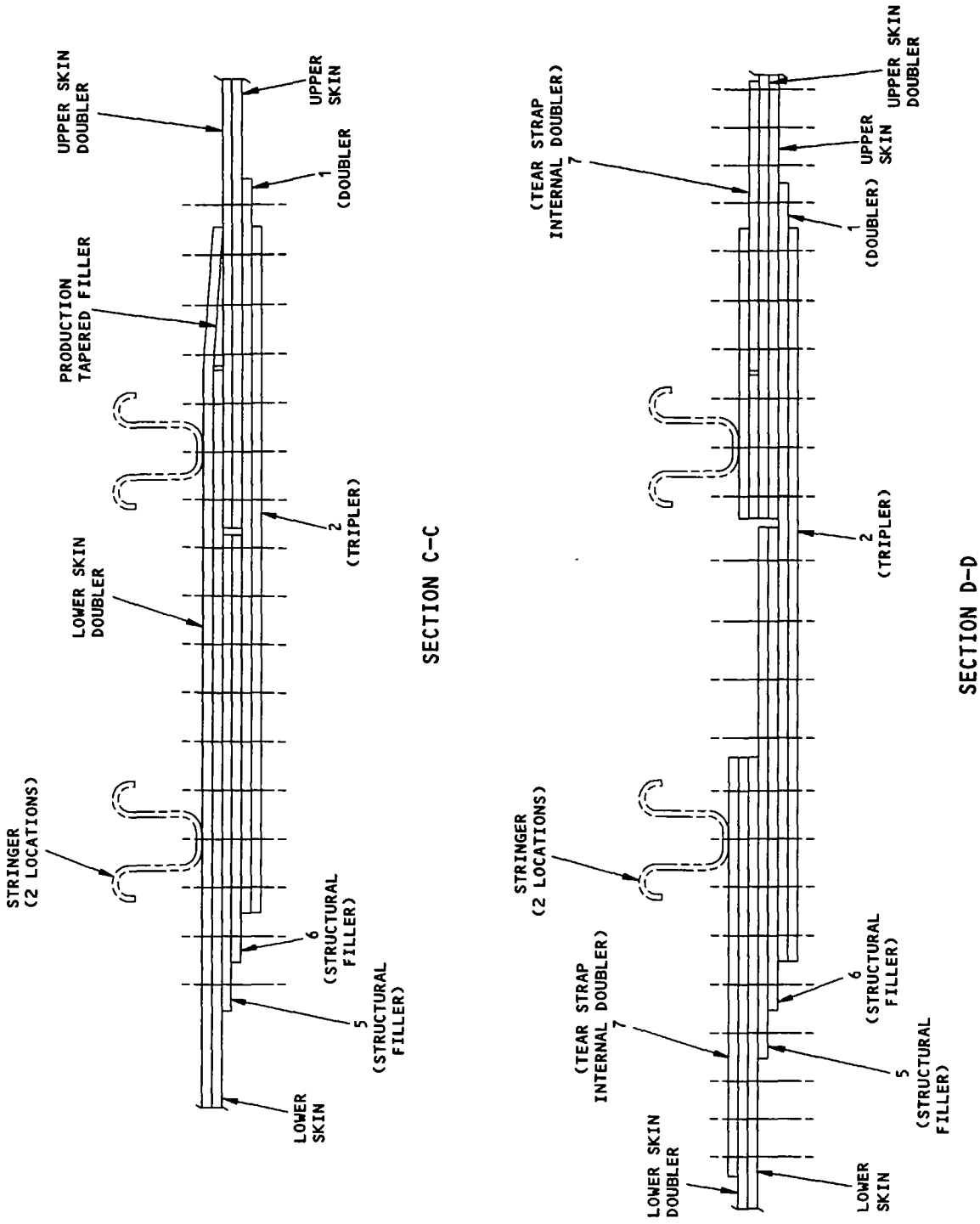

General Fuselage Skin Repair
Figure 48 (Sheet 35)

BOEING PROPRIETARY - Copyright © - Unpublished Work - See title page for details.

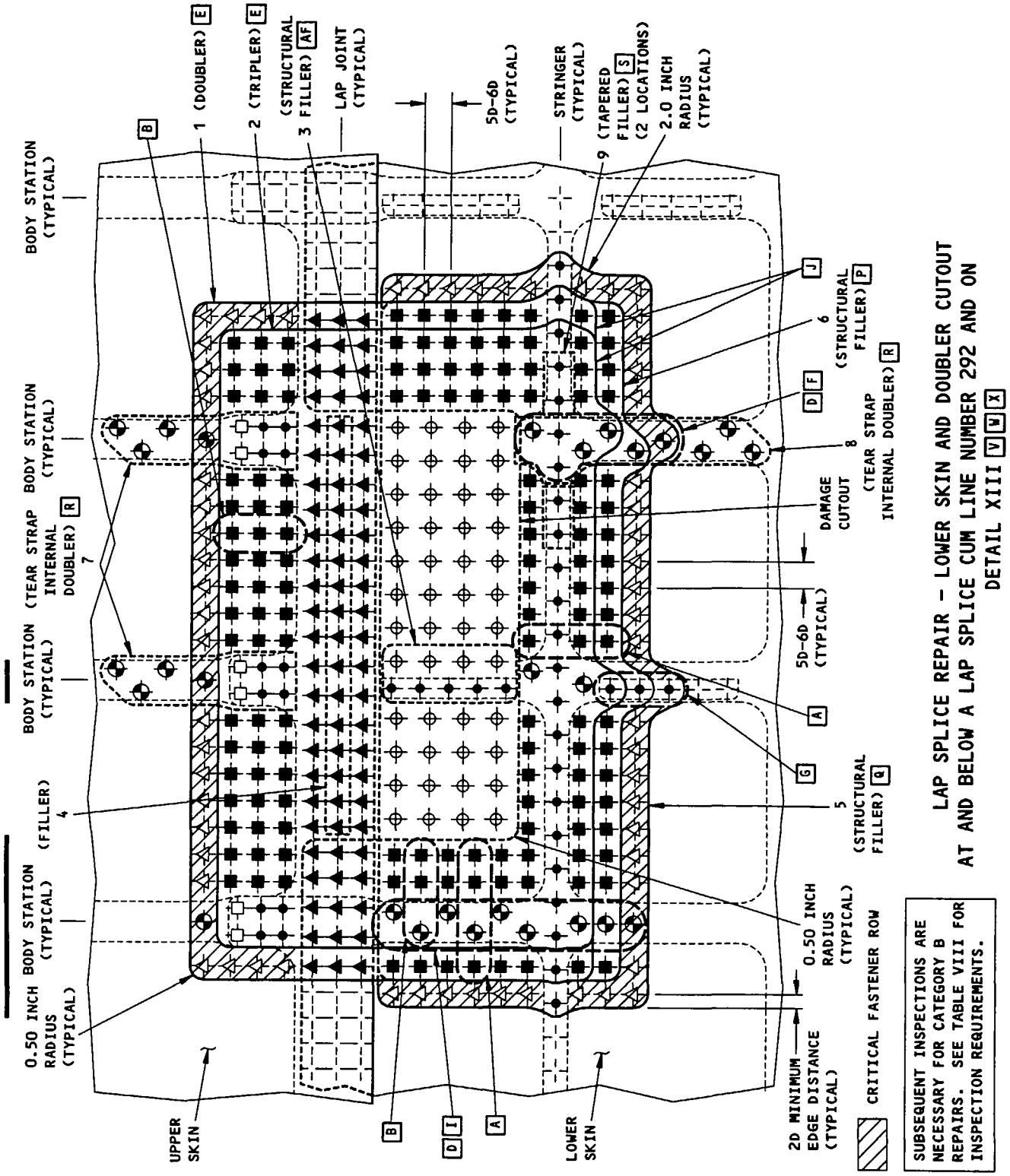

General Fuselage Skin Repair
Figure 48 (Sheet 36)

BOEING PROPRIETARY - Copyright © - Unpublished Work - See title page for details.

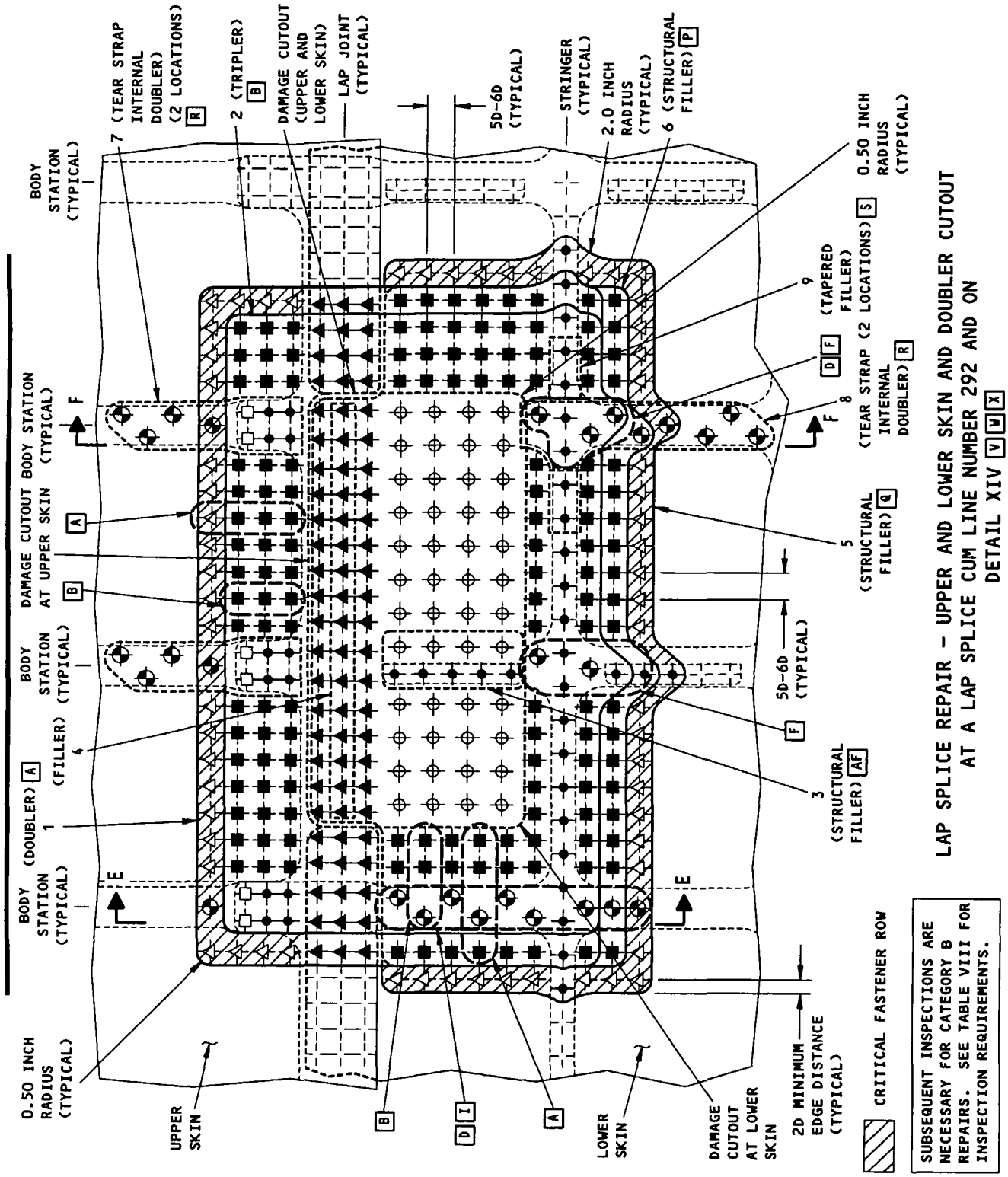

General Fuselage Skin Repair
Figure 48 (Sheet 37)

BOEING PROPRIETARY - Copyright © - Unpublished Work - See title page for details.

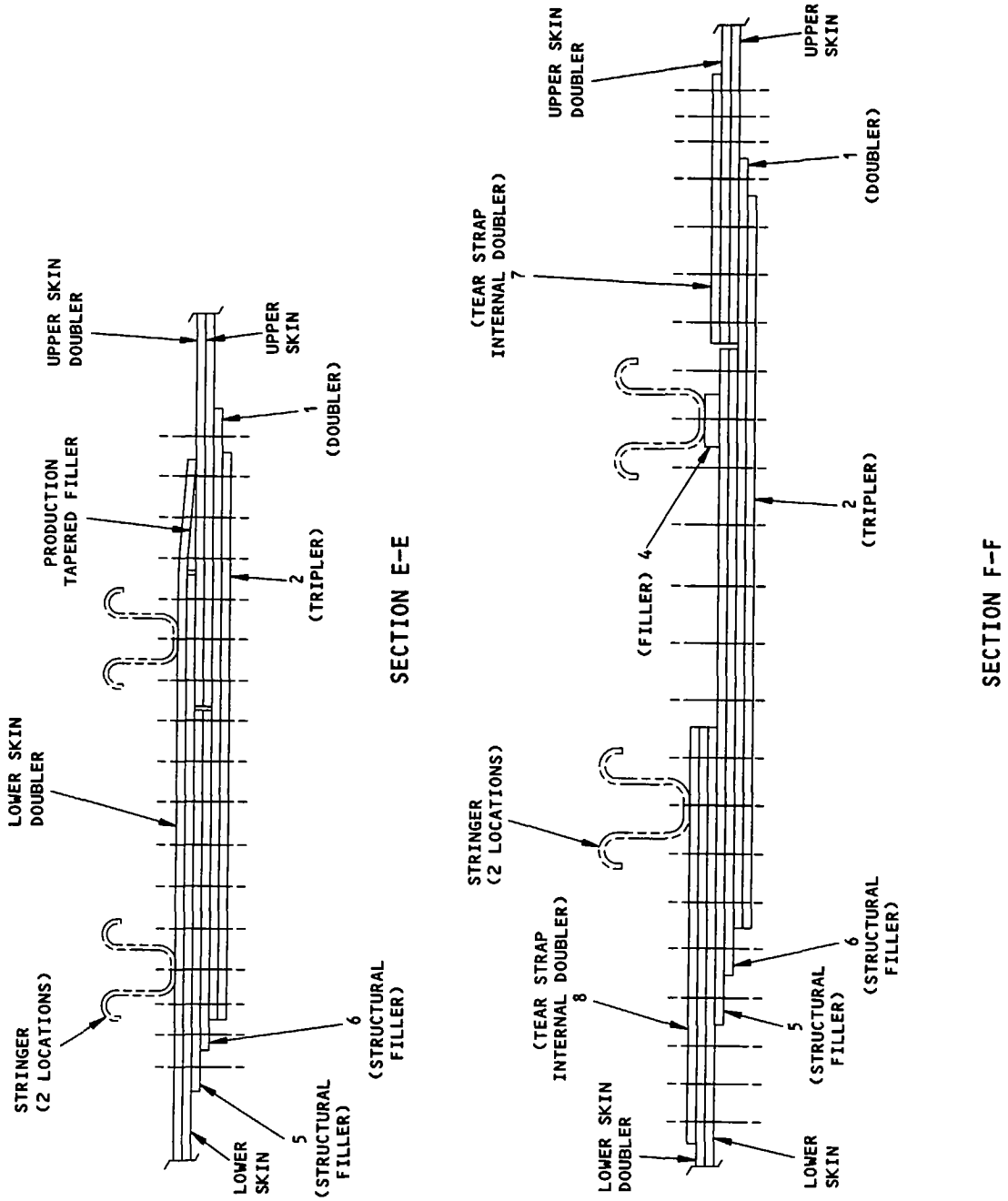

General Fuselage Skin Repair
Figure 48 (Sheet 38)

BOEING PROPRIETARY - Copyright © - Unpublished Work - See title page for details.

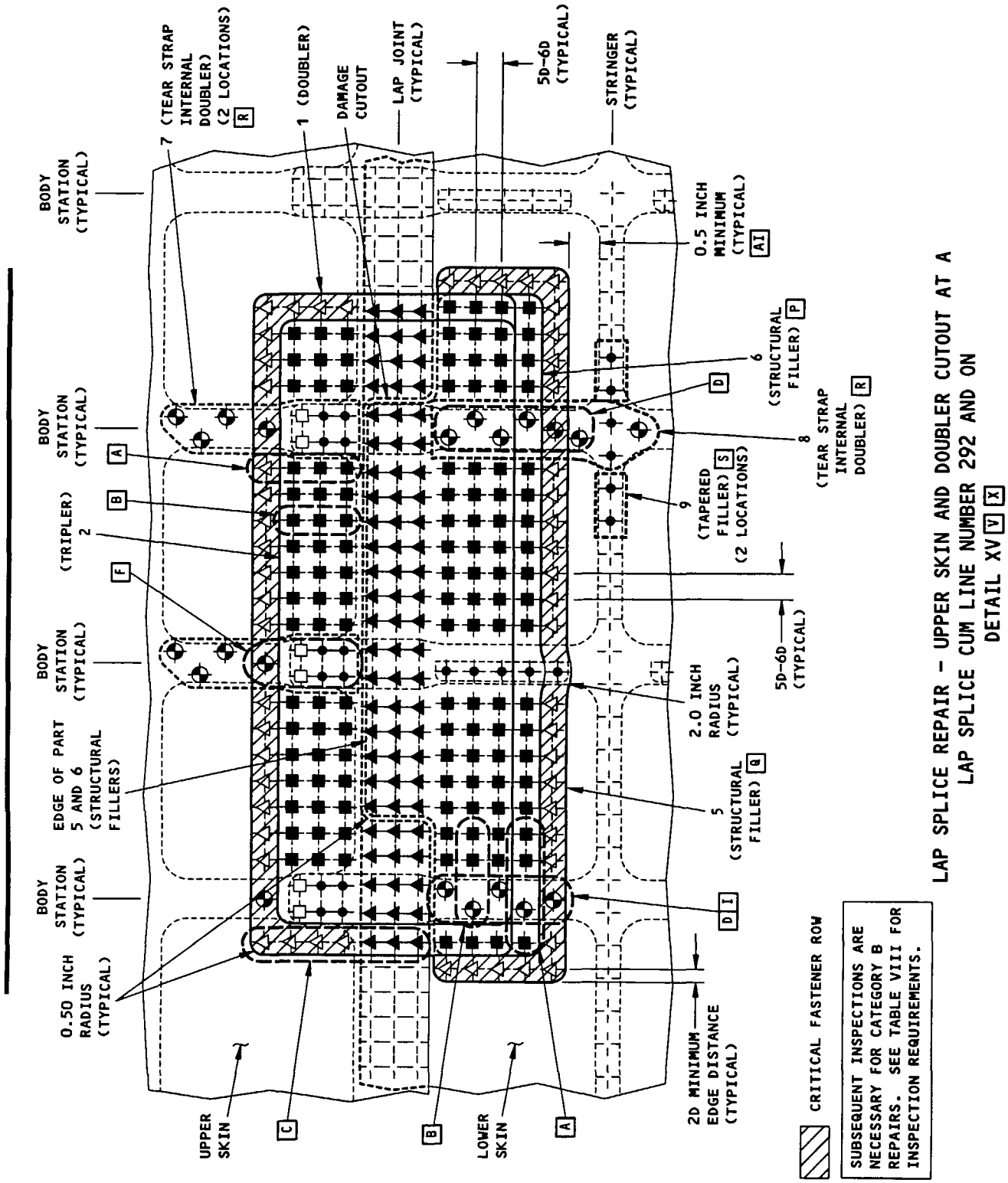

General Fuselage Skin Repair
Figure 48 (Sheet 39)

BOEING PROPRIETARY - Copyright © - Unpublished Work - See title page for details.

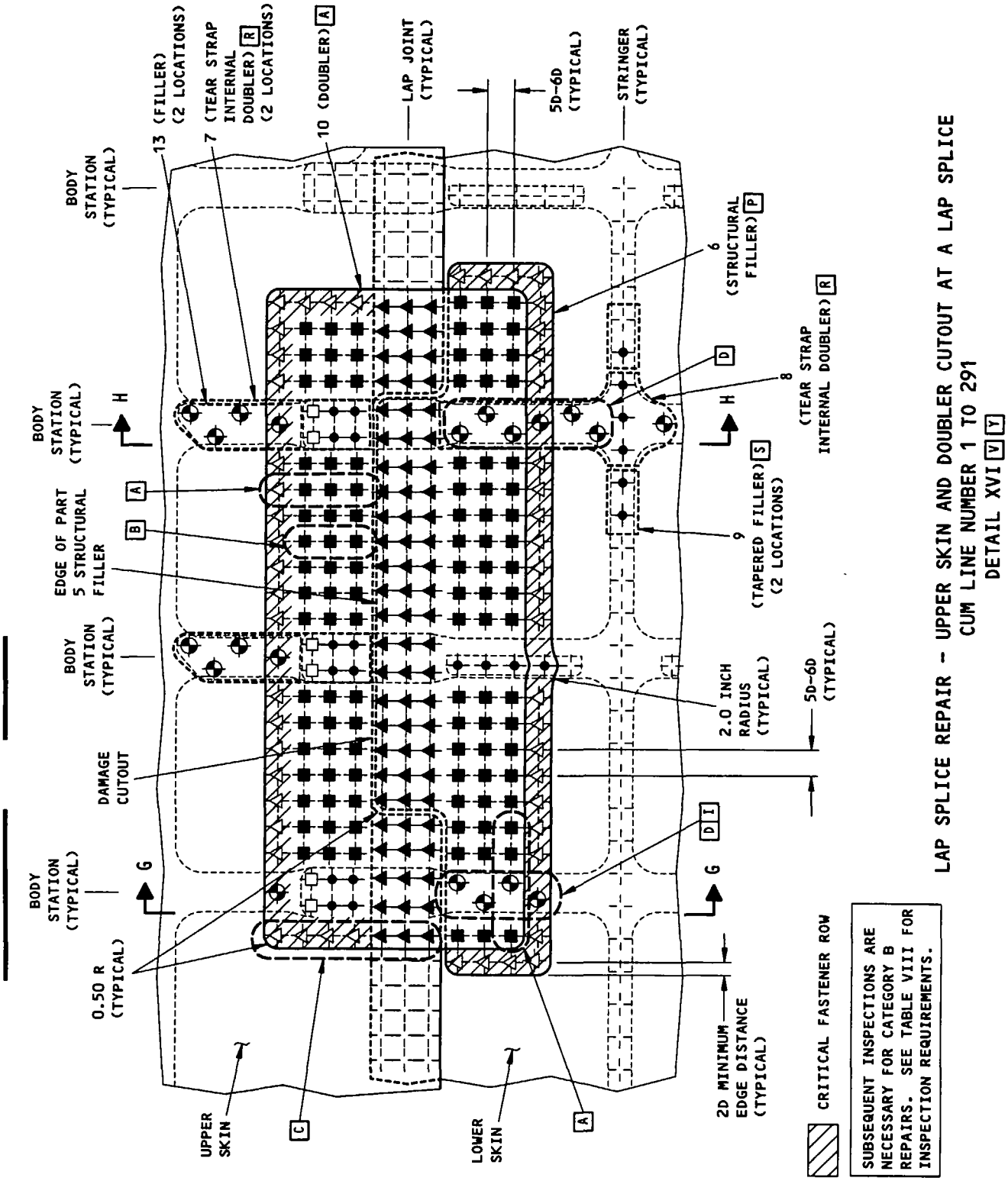

General Fuselage Skin Repair
Figure 48 (Sheet 40)

BOEING PROPRIETARY - Copyright © - Unpublished Work - See title page for details.

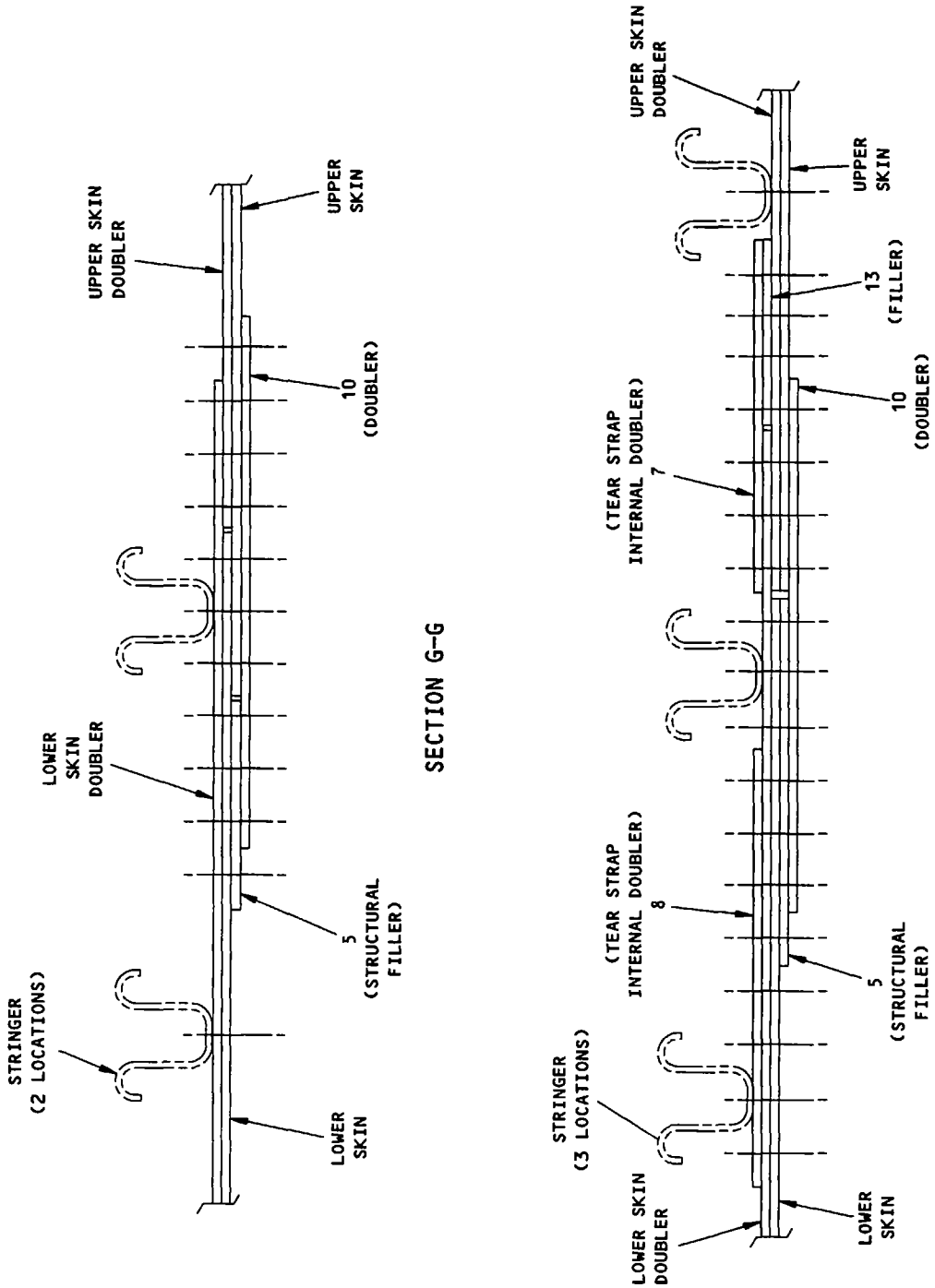

General Fuselage Skin Repair
Figure 48 (Sheet 41)

BOEING PROPRIETARY - Copyright © - Unpublished Work - See title page for details.

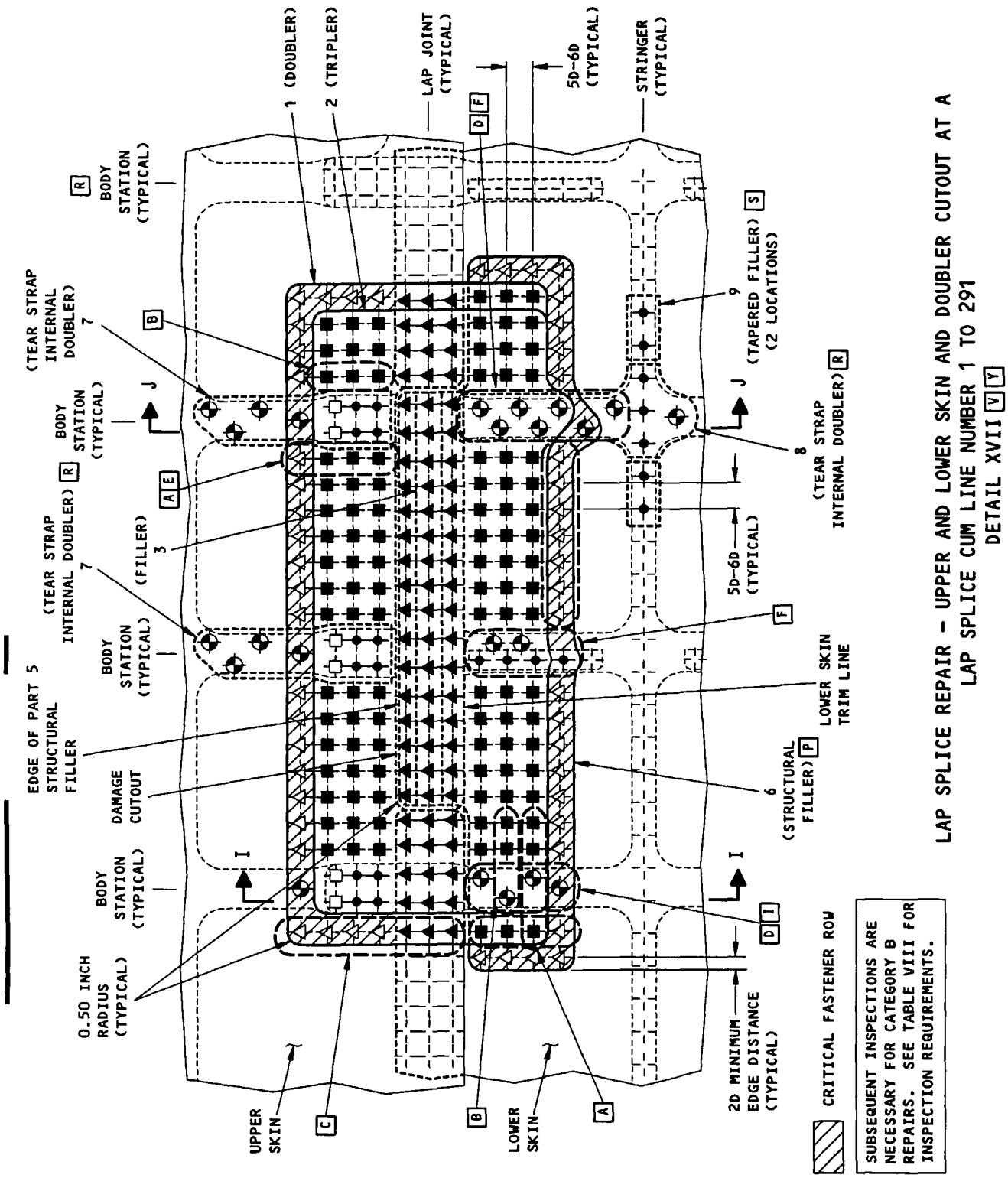

General Fuselage Skin Repair
Figure 48 (Sheet 42)

BOEING PROPRIETARY - Copyright © - Unpublished Work - See title page for details.

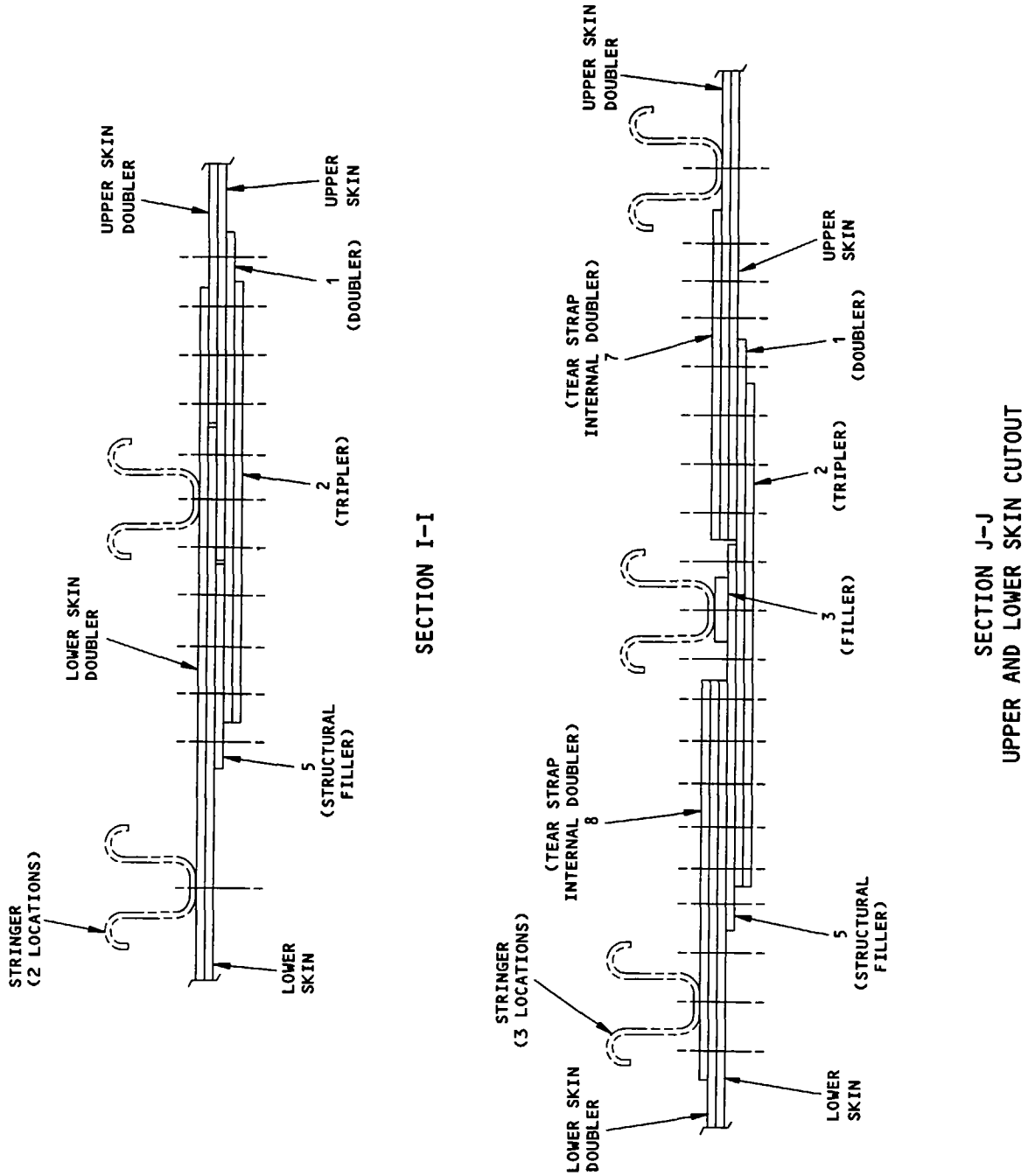

General Fuselage Skin Repair
Figure 48 (Sheet 43)

BOEING PROPRIETARY - Copyright © - Unpublished Work - See title page for details.

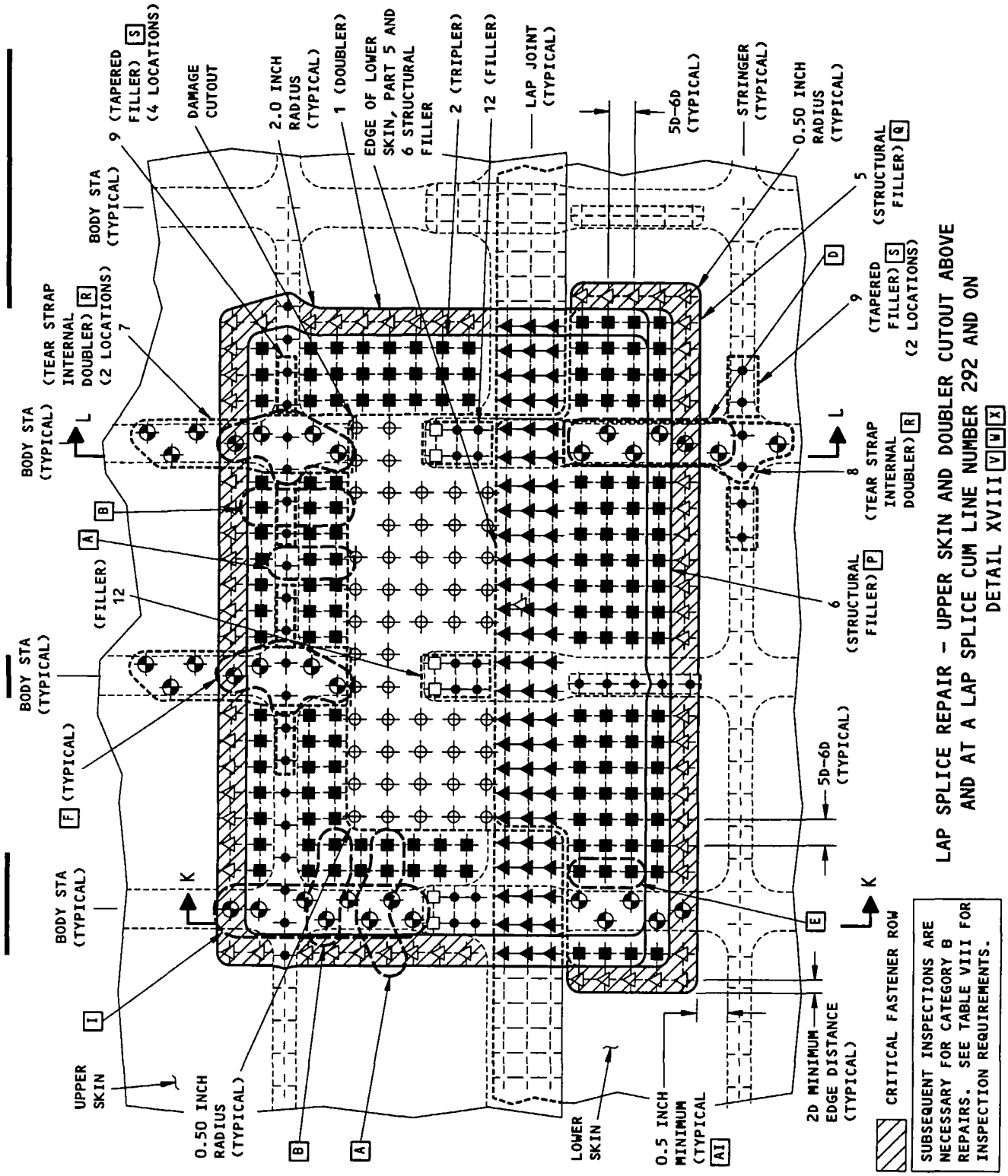

General Fuselage Skin Repair
Figure 48 (Sheet 44)

BOEING PROPRIETARY - Copyright © - Unpublished Work - See title page for details.

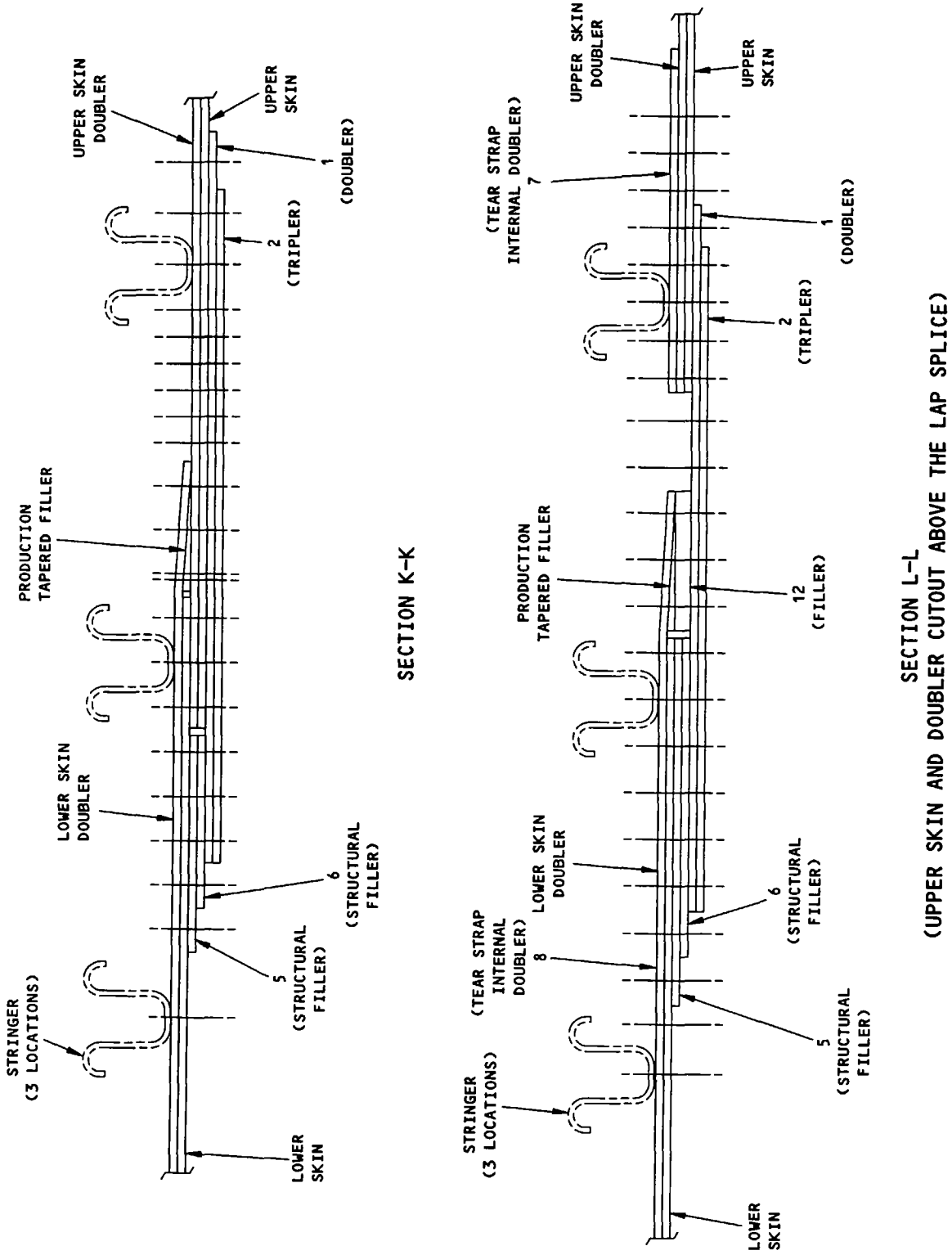

General Fuselage Skin Repair
Figure 48 (Sheet 45)

BOEING PROPRIETARY - Copyright © - Unpublished Work - See title page for details.

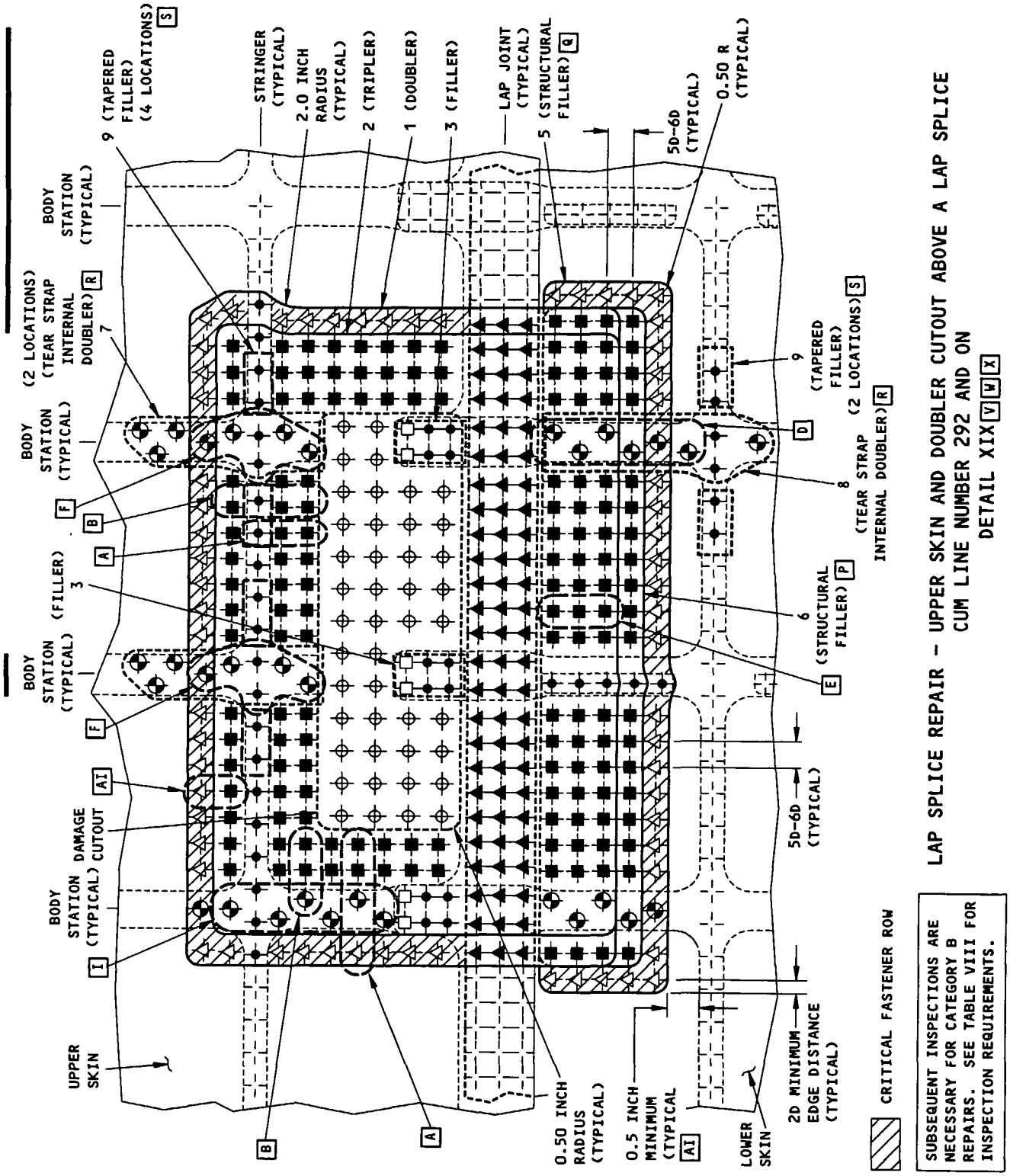

General Fuselage Skin Repair
Figure 48 (Sheet 46)

BOEING PROPRIETARY - Copyright © - Unpublished Work - See title page for details.

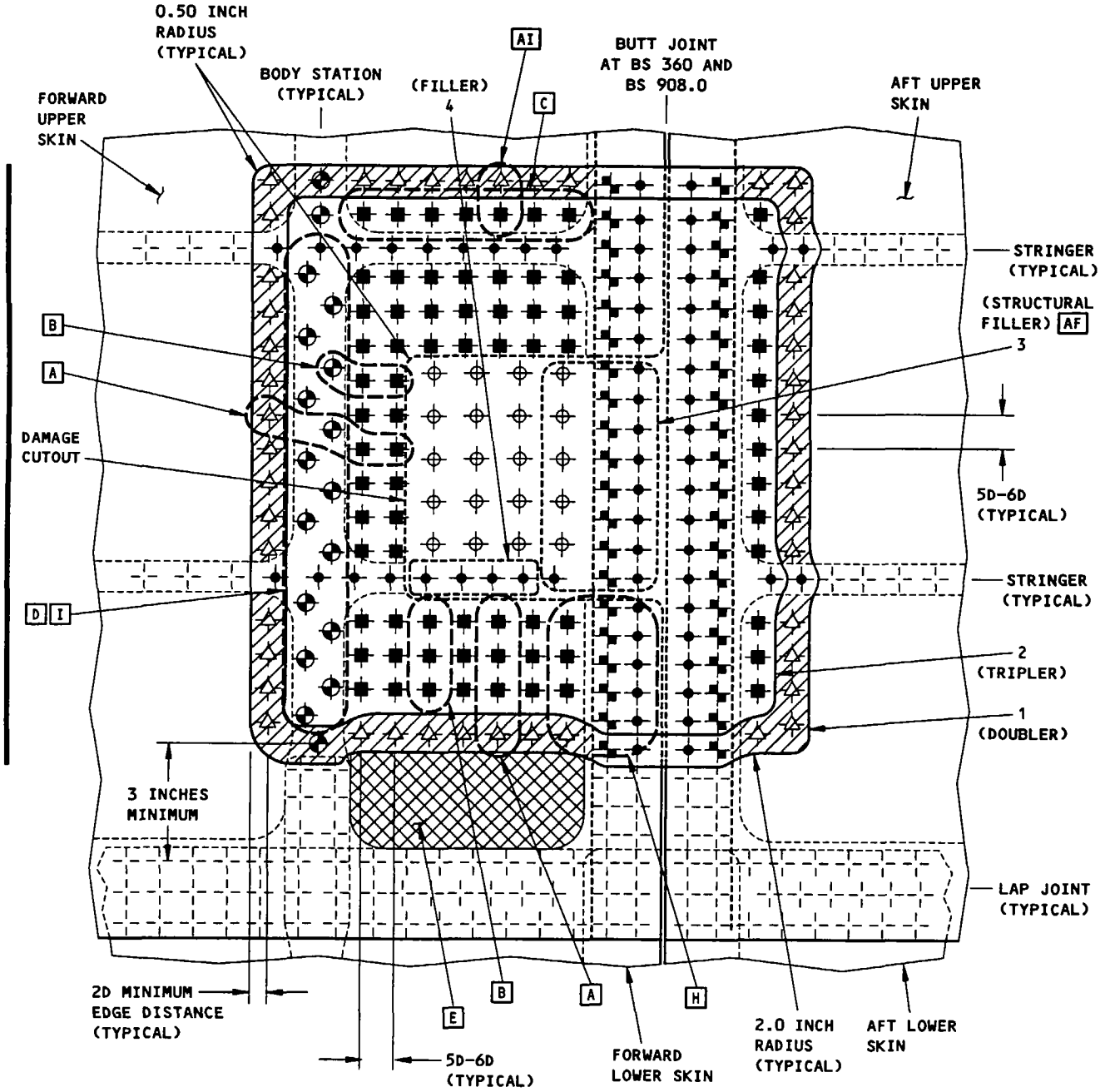

CRITICAL FASTENER ROW

SUBSEQUENT INSPECTIONS ARE NECESSARY FOR CATEGORY B REPAIRS. SEE TABLE VIII FOR INSPECTION REQUIREMENTS.

BUTT JOINT REPAIR AT BS 908.0 IS SHOWN, BS 360.0 IS SIMILAR
UPPER SKIN AND DOUBLER CUTOUT AT A BUTT JOINT AND ABOVE A LAP SPLICE
DETAIL XX V AA

General Fuselage Skin Repair
Figure 48 (Sheet 47)

BOEING PROPRIETARY - Copyright © - Unpublished Work - See title page for details.

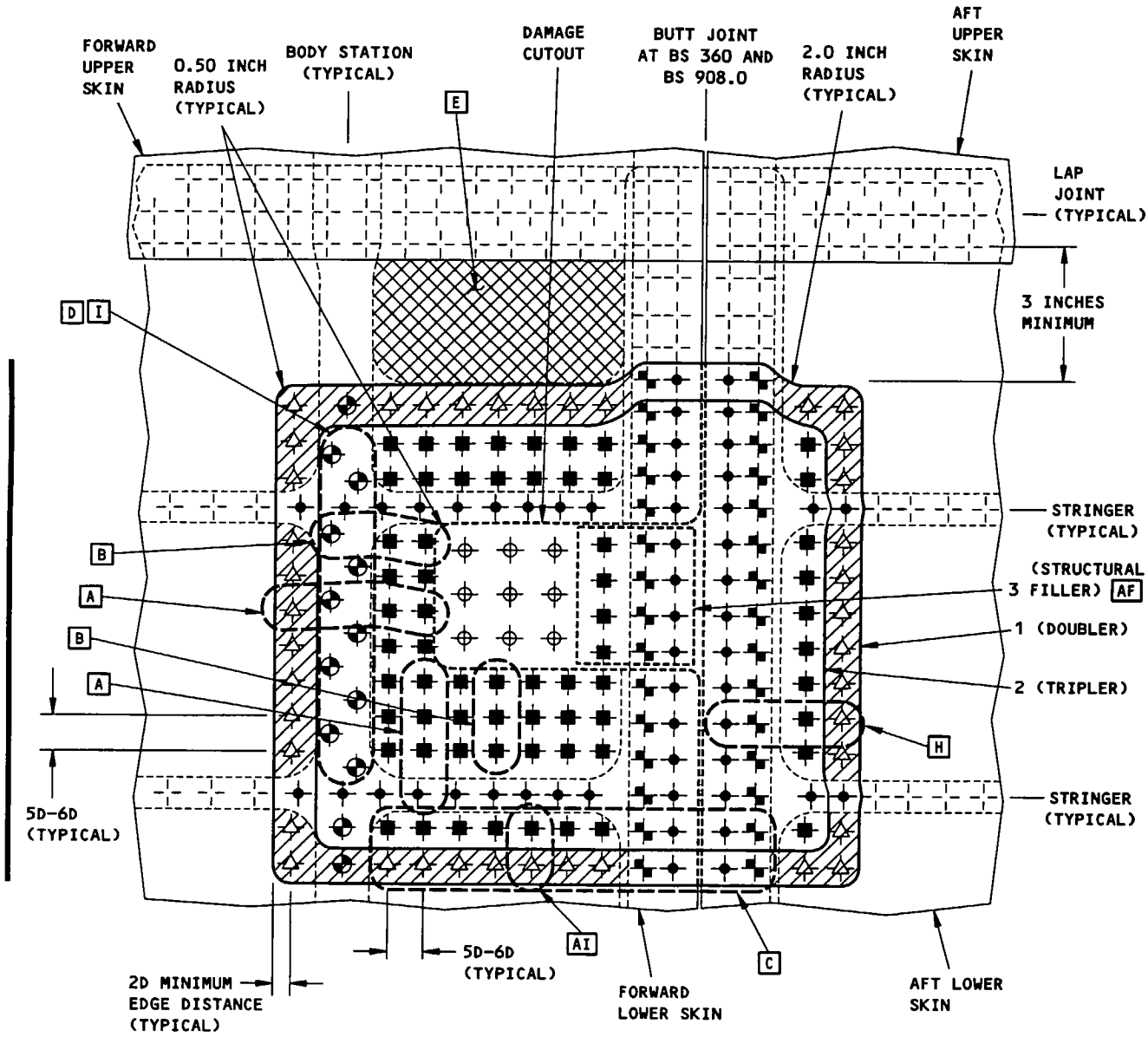

CRITICAL FASTENER ROW

SUBSEQUENT INSPECTIONS ARE NECESSARY FOR CATEGORY B REPAIRS. SEE TABLE VIII FOR INSPECTION REQUIREMENTS.

BUTT JOINT REPAIR AT BS 908.0 IS SHOWN, BS 360.0 IS SIMILAR
LOWER SKIN AND DOUBLER CUTOUT AT A BUTT JOINT AND BELOW A LAP SPLICE
DETAIL XXI V AA

General Fuselage Skin Repair
Figure 48 (Sheet 48)

BOEING PROPRIETARY - Copyright © - Unpublished Work - See title page for details.

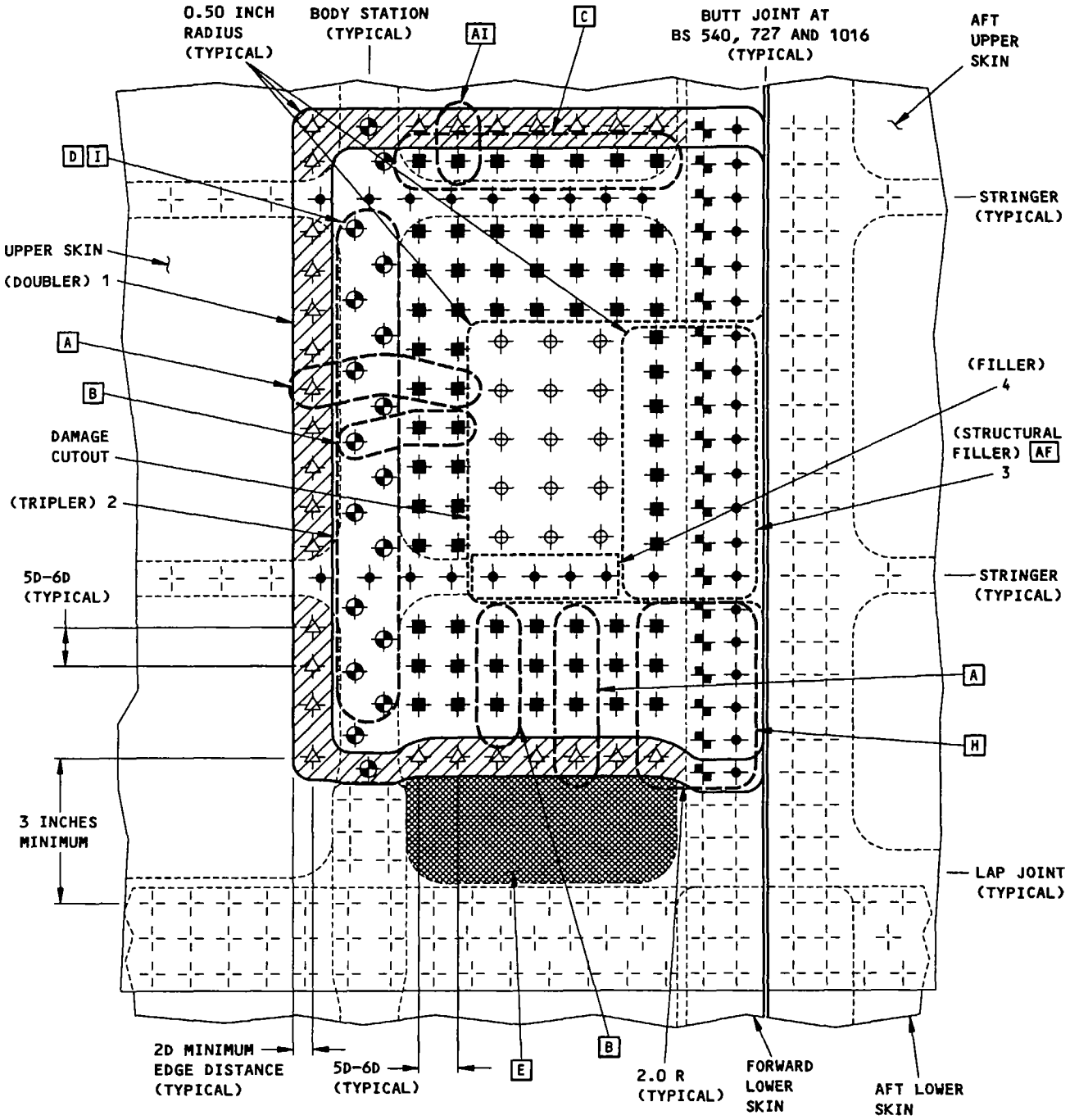

CRITICAL FASTENER ROW

SUBSEQUENT INSPECTIONS ARE NECESSARY FOR CATEGORY B REPAIRS. SEE TABLE VIII FOR INSPECTION REQUIREMENTS.

BUTT JOINT REPAIR - UPPER SKIN AND DOUBLER CUTOUT
AT BUTT JOINT AND ABOVE A LAP SPLICE
DETAIL XXII V Z

General Fuselage Skin Repair
Figure 48 (Sheet 49)

BOEING PROPRIETARY - Copyright © - Unpublished Work - See title page for details.

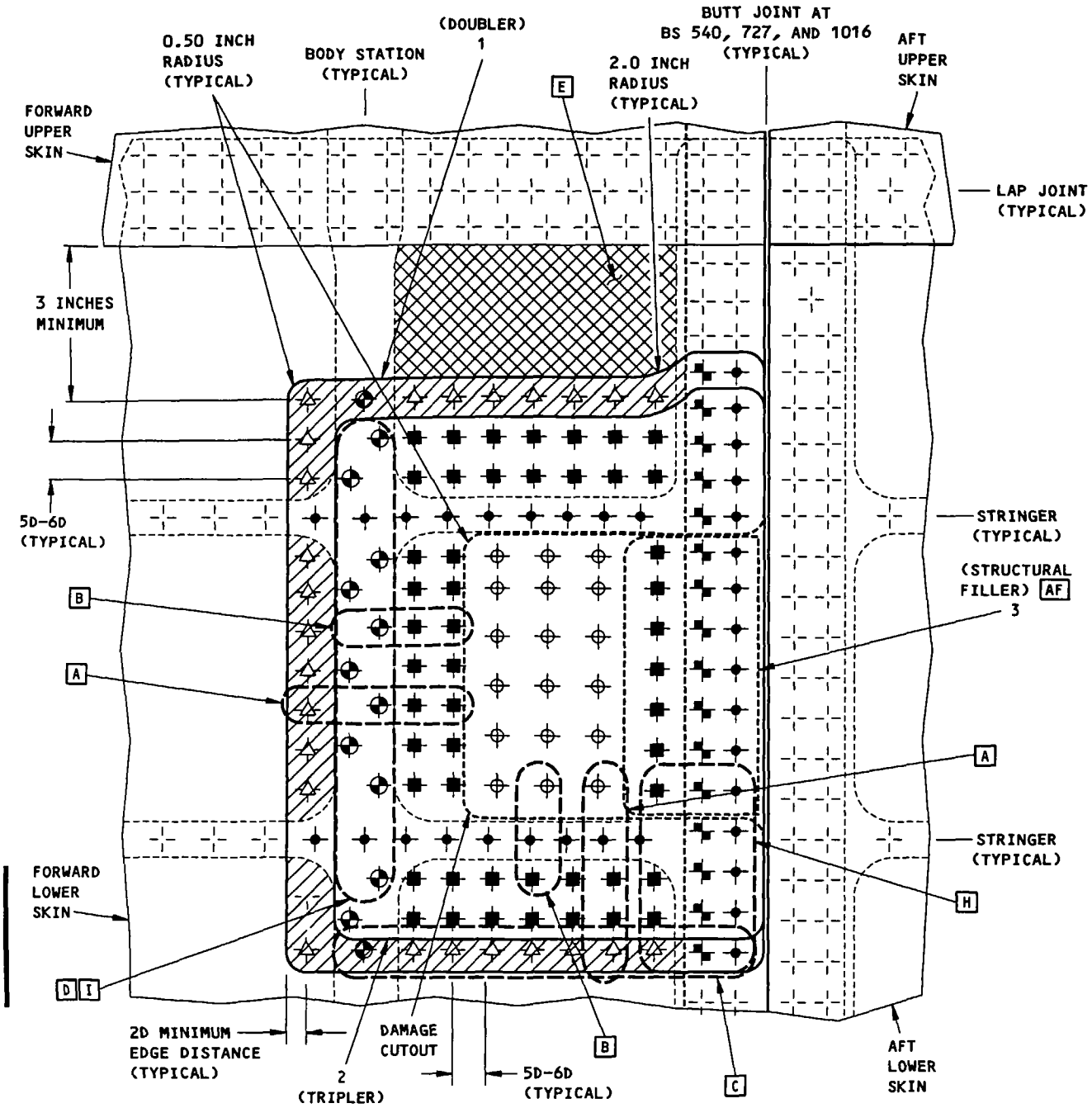

CRITICAL FASTENER ROW

SUBSEQUENT INSPECTIONS ARE NECESSARY FOR CATEGORY B REPAIRS. SEE TABLE VIII FOR INSPECTION REQUIREMENTS.

BUTT JOINT REPAIR - LOWER SKIN AND DOUBLER CUTOUT
AT A BUTT JOINT AND BELOW A LAP SPLICE
DETAIL XXIII V Z

General Fuselage Skin Repair
Figure 48 (Sheet 50)

BOEING PROPRIETARY - Copyright © - Unpublished Work - See title page for details.

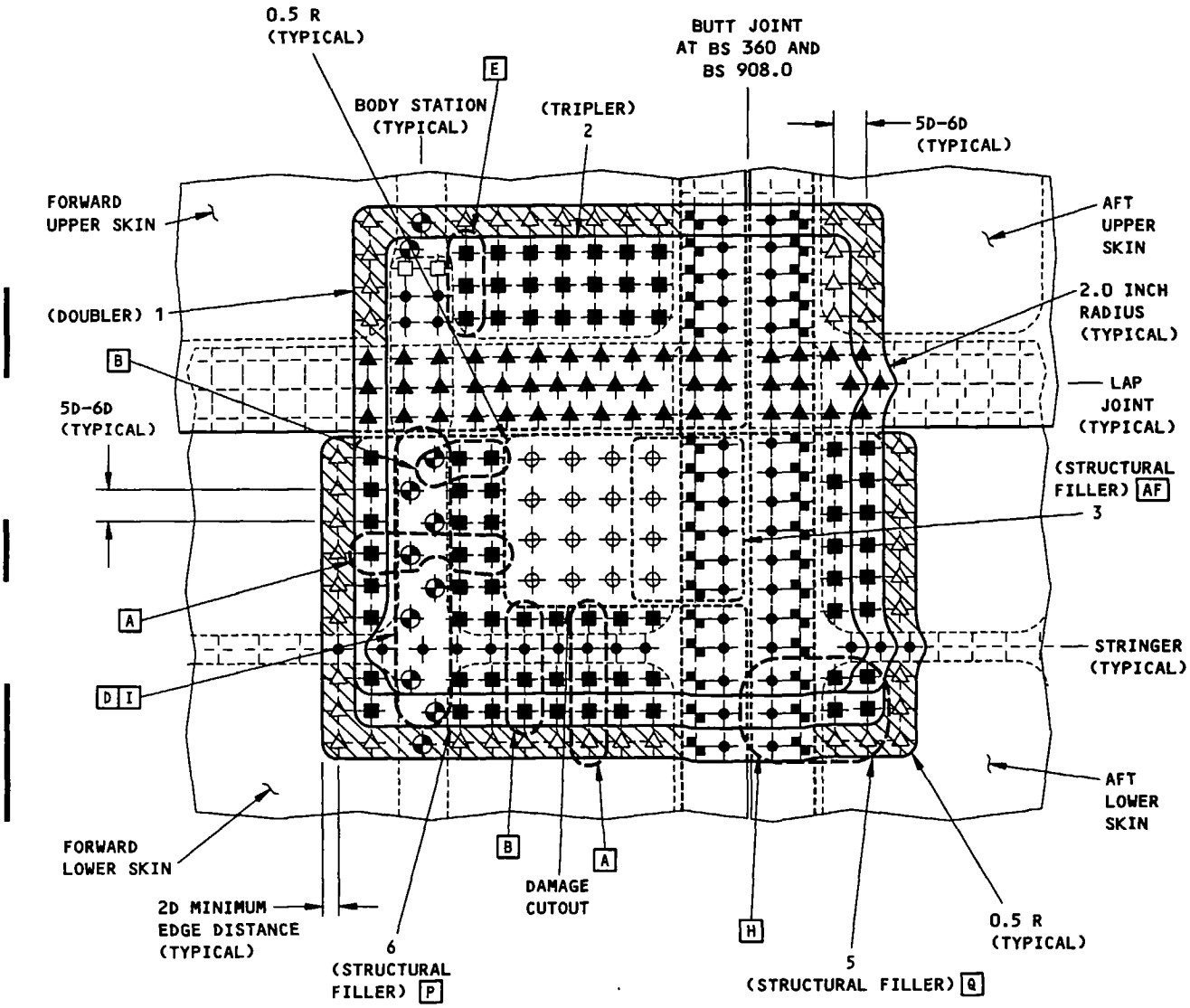

CRITICAL FASTENER ROW

SUBSEQUENT INSPECTIONS ARE NECESSARY FOR CATEGORY B REPAIRS. SEE TABLE VIII FOR INSPECTION REQUIREMENTS.

BUTT JOINT AND LAP SPLICE REPAIR AT BS 908.0 IS SHOWN, BS 360.0 IS SIMILAR
LOWER SKIN AND DOUBLER CUTOUT AT A BUTT JOINT AND BELOW A LAP SPLICE
CUM LINE NUMBER 292 AND ON
DETAIL XXIV V X AA

General Fuselage Skin Repair
Figure 48 (Sheet 51)

BOEING PROPRIETARY - Copyright © - Unpublished Work - See title page for details.

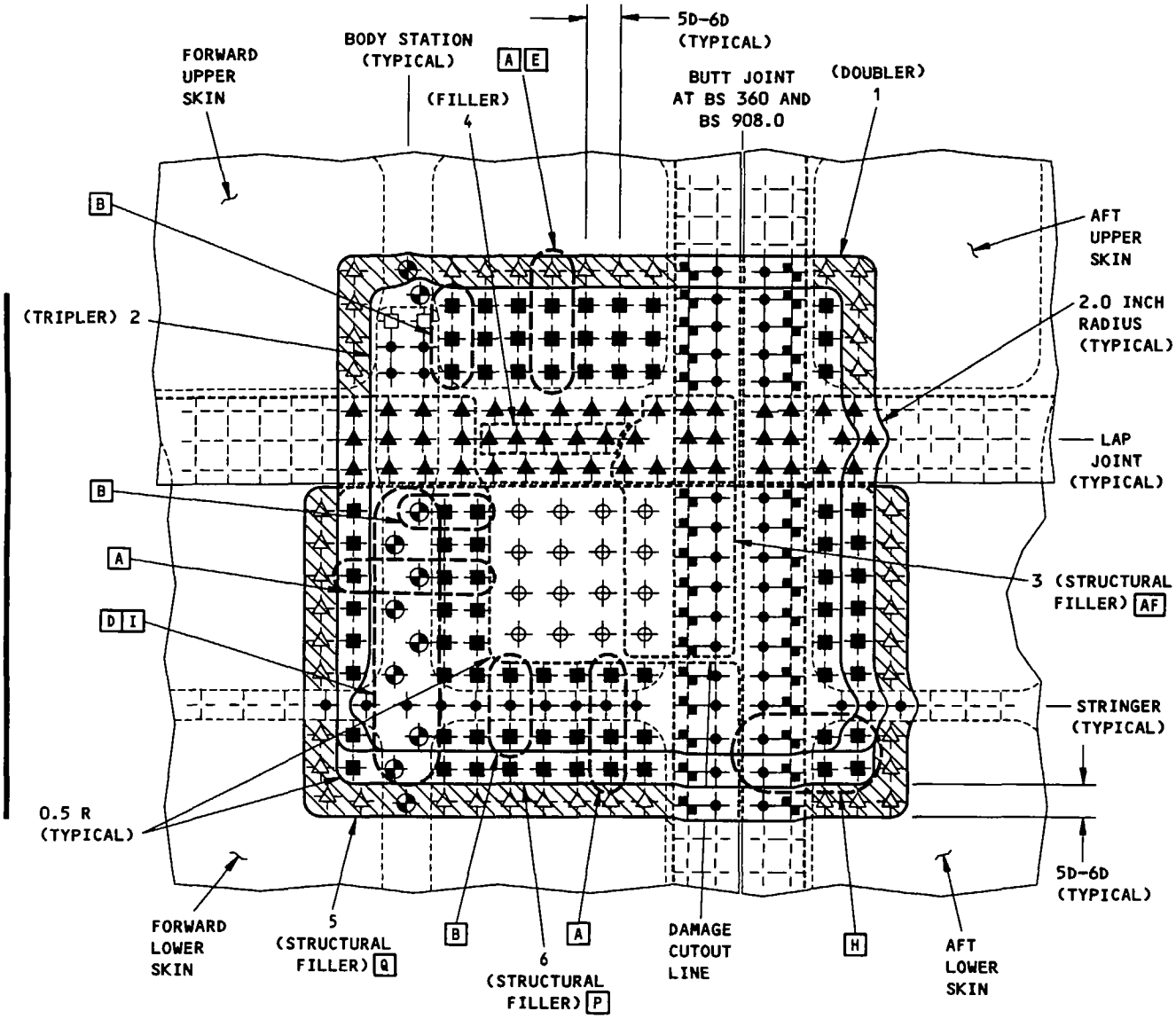

CRITICAL FASTENER ROW

SUBSEQUENT INSPECTIONS ARE NECESSARY FOR CATEGORY B REPAIRS. SEE TABLE VIII FOR INSPECTION REQUIREMENTS.

BUTT JOINT AND LAP SPLICE REPAIR AT BS 908.0 IS SHOWN, BS 360.0 IS SIMILAR
LOWER SKIN AND DOUBLER CUTOUT AT A BUTT JOINT AND AT AND BELOW A LAP SPLICE
CUM LINE NUMBER 292 AND ON
DETAIL XXV V X AA

General Fuselage Skin Repair
Figure 48 (Sheet 52)

BOEING PROPRIETARY - Copyright © - Unpublished Work - See title page for details.

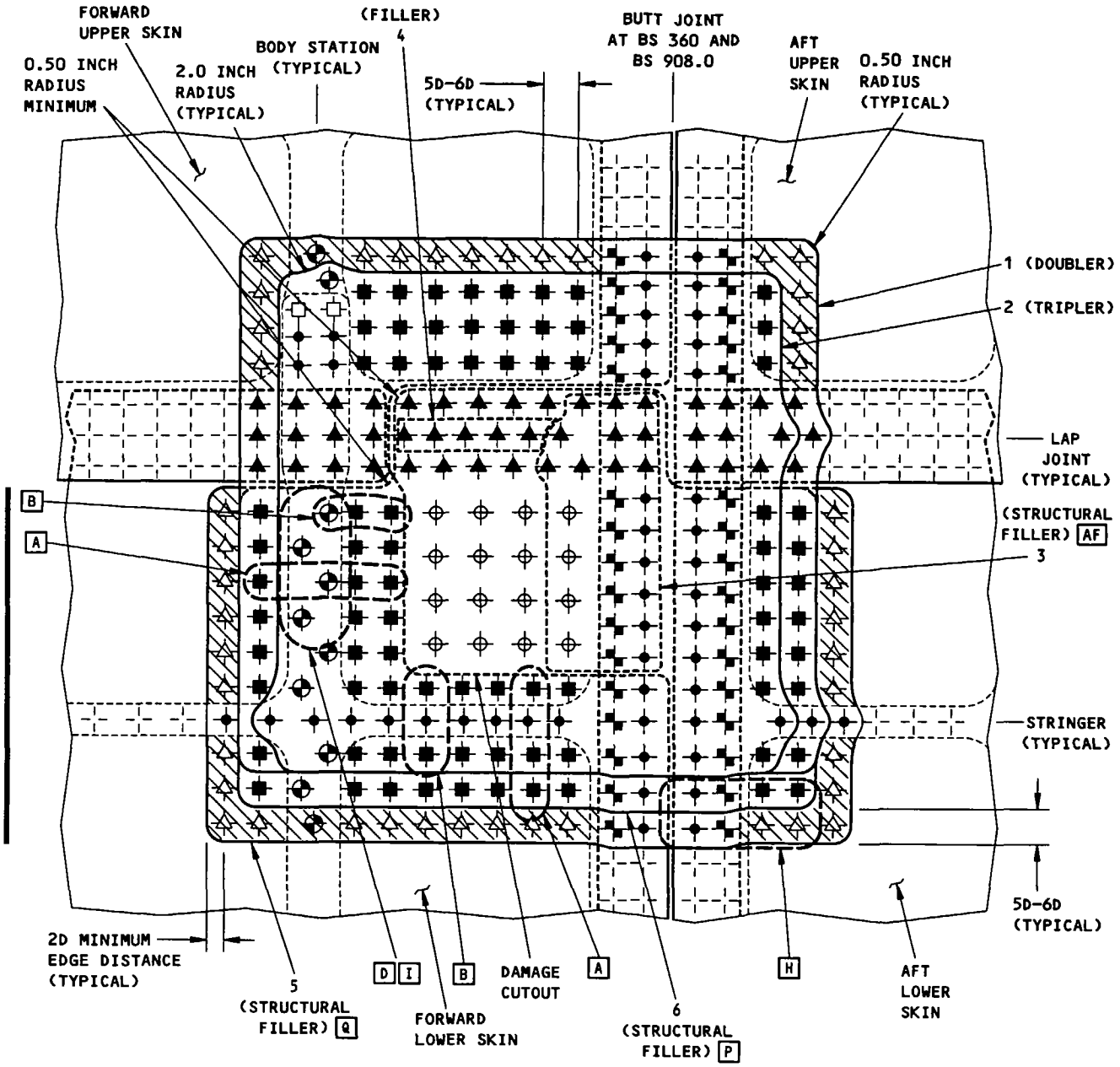

CRITICAL FASTENER ROW

SUBSEQUENT INSPECTIONS ARE NECESSARY FOR CATEGORY B REPAIRS. SEE TABLE VIII FOR INSPECTION REQUIREMENTS.

BUTT JOINT AND LAP SPLICE REPAIR AT BS 908.0 IS SHOWN, BS 360.0 IS SIMILAR
LOWER AND UPPER SKIN AND DOUBLER CUTOUT AT A BUTT JOINT AND AT AND BELOW A LAP SPLICE
CUM LINE NUMBER 292 AND ON
DETAIL XXVI V X AA

General Fuselage Skin Repair
Figure 48 (Sheet 53)

BOEING PROPRIETARY - Copyright © - Unpublished Work - See title page for details.

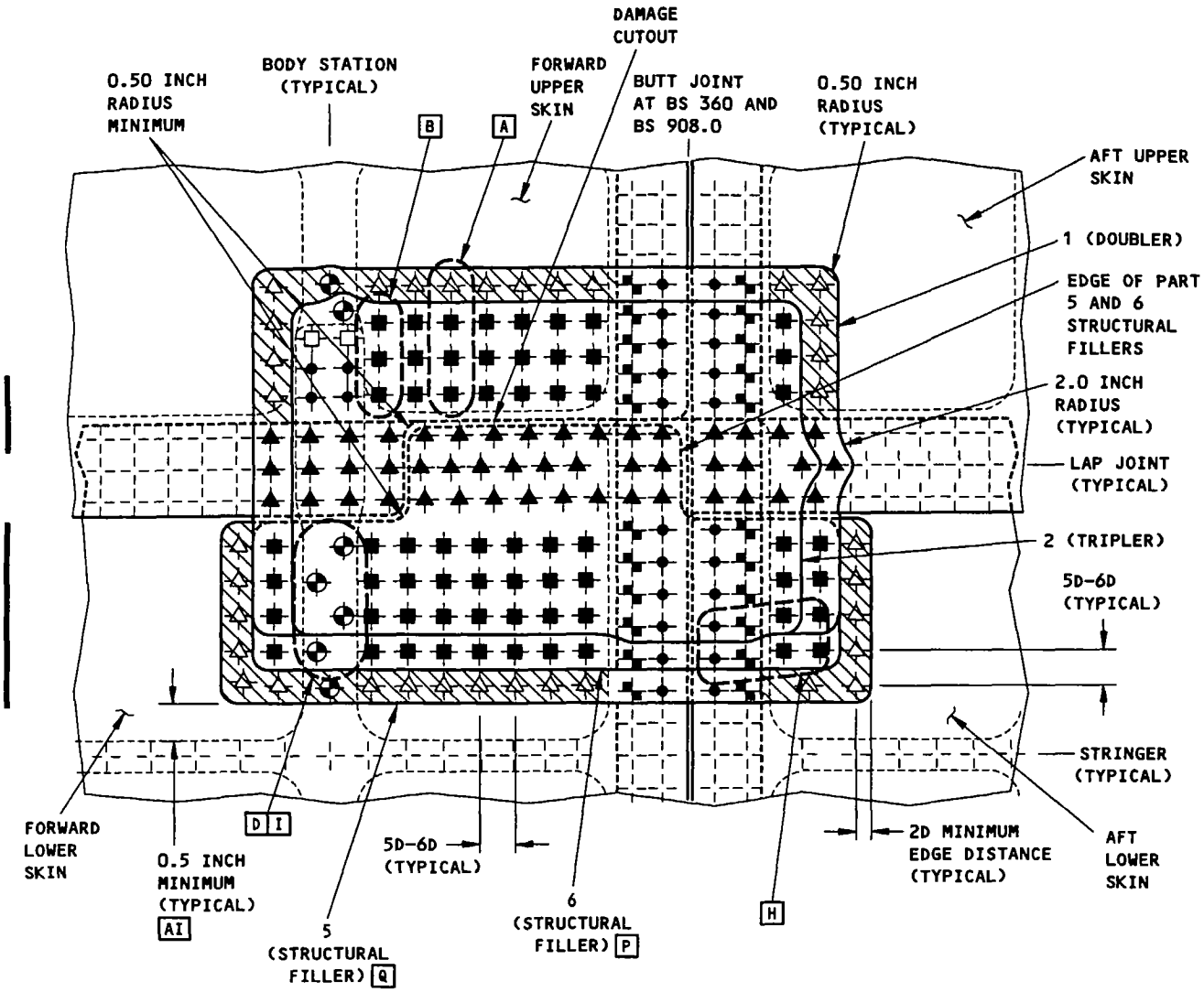

CRITICAL FASTENER ROW

SUBSEQUENT INSPECTIONS ARE NECESSARY FOR CATEGORY B REPAIRS. SEE TABLE VIII FOR INSPECTION REQUIREMENTS.

BUTT JOINT AND LAP SPLICE REPAIR AT BS 908.0 IS SHOWN, BS 360.0 IS SIMILAR
UPPER SKIN AND DOUBLER CUTOUT AT A BUTT JOINT AND A LAP SPLICE
CUM LINE NUMBER 292 AND ON
DETAIL XXVII V X AB

General Fuselage Skin Repair
Figure 48 (Sheet 54)

BOEING PROPRIETARY - Copyright © - Unpublished Work - See title page for details.

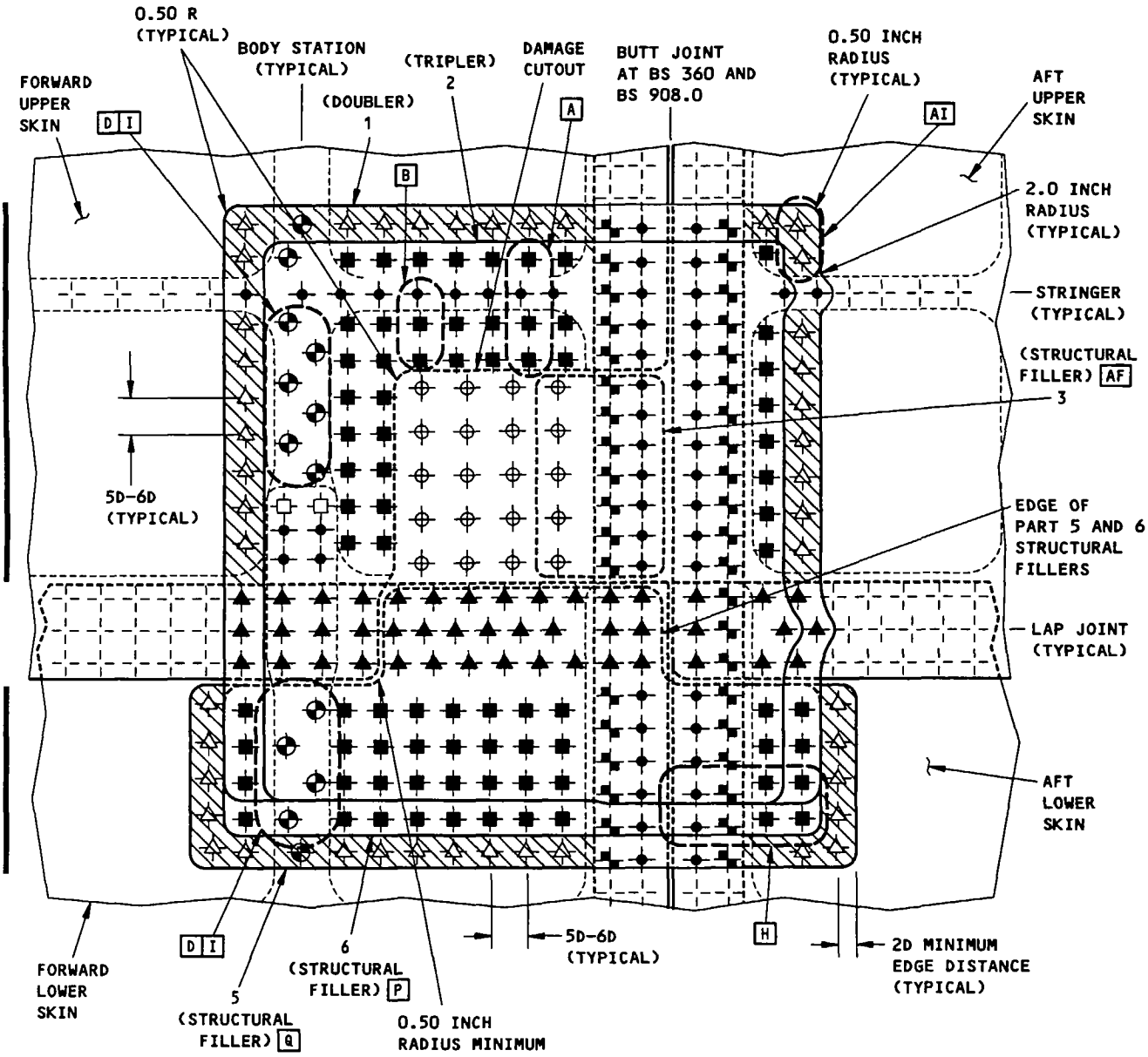

CRITICAL FASTENER ROW

SUBSEQUENT INSPECTIONS ARE NECESSARY FOR CATEGORY B REPAIRS. SEE TABLE VIII FOR INSPECTION REQUIREMENTS.

BUTT JOINT AND LAP SPLICE REPAIR AT BS 908.0 IS SHOWN, BS 360.0 IS SIMILAR
UPPER SKIN AND DOUBLER CUTOUT AT AND ABOVE A LAP SPLICE
CUM LINE NUMBER 292 AND ON
DETAIL XXVIII V X AA

General Fuselage Skin Repair
Figure 48 (Sheet 55)

BOEING PROPRIETARY - Copyright © - Unpublished Work - See title page for details.

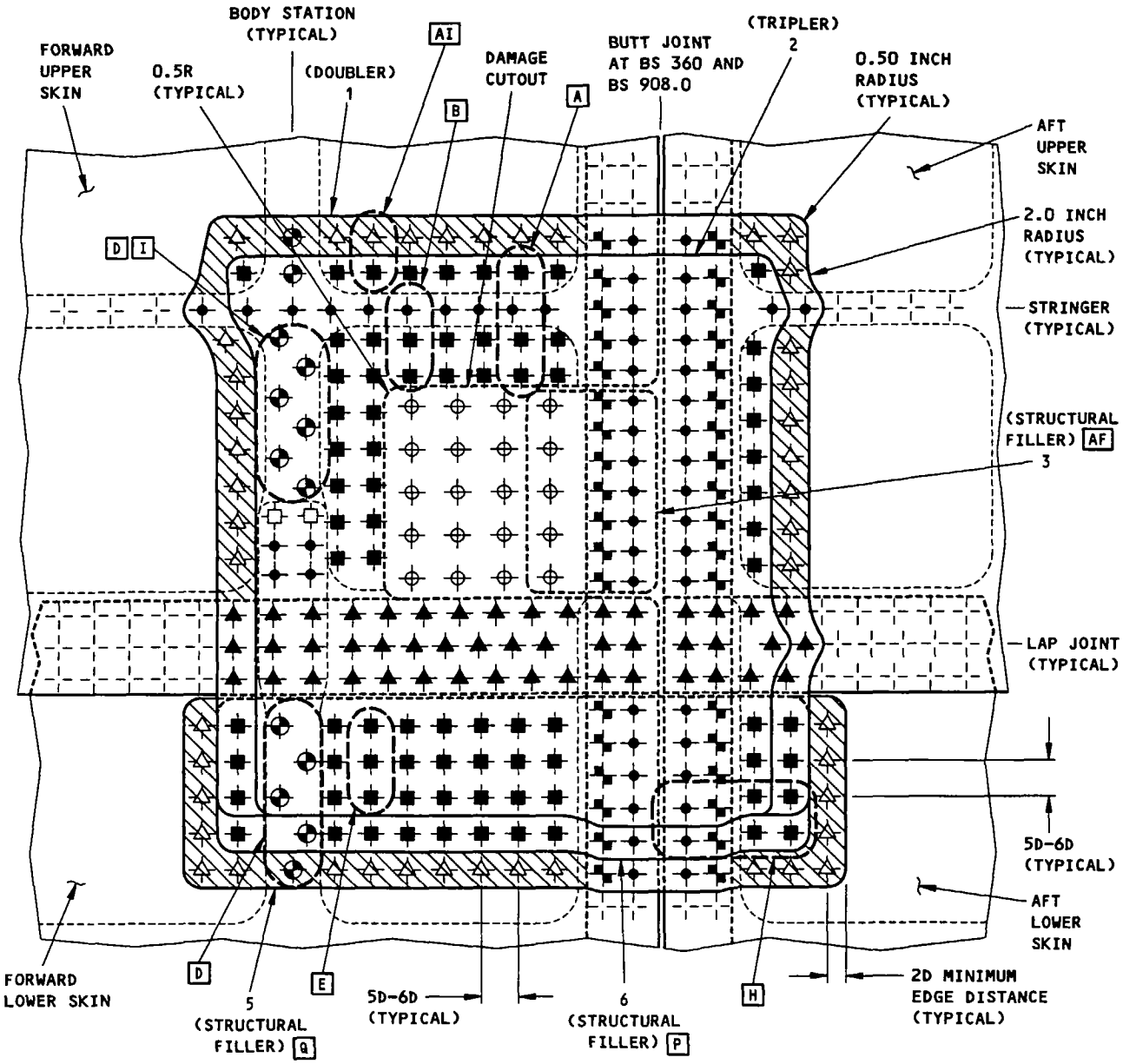

CRITICAL FASTENER ROW

SUBSEQUENT INSPECTIONS ARE NECESSARY FOR CATEGORY B REPAIRS. SEE TABLE VIII FOR INSPECTION REQUIREMENTS.

BUTT JOINT AND LAP SPLICE REPAIR AT BS 908.0 IS SHOWN, BS 360.0 IS SIMILAR
UPPER SKIN AND DOUBLER CUTOUT ABOVE A LAP SPLICE
CUM LINE NUMBER 292 AND ON
DETAIL XXIX V X AA

General Fuselage Skin Repair
Figure 48 (Sheet 56)

BOEING PROPRIETARY - Copyright © - Unpublished Work - See title page for details.

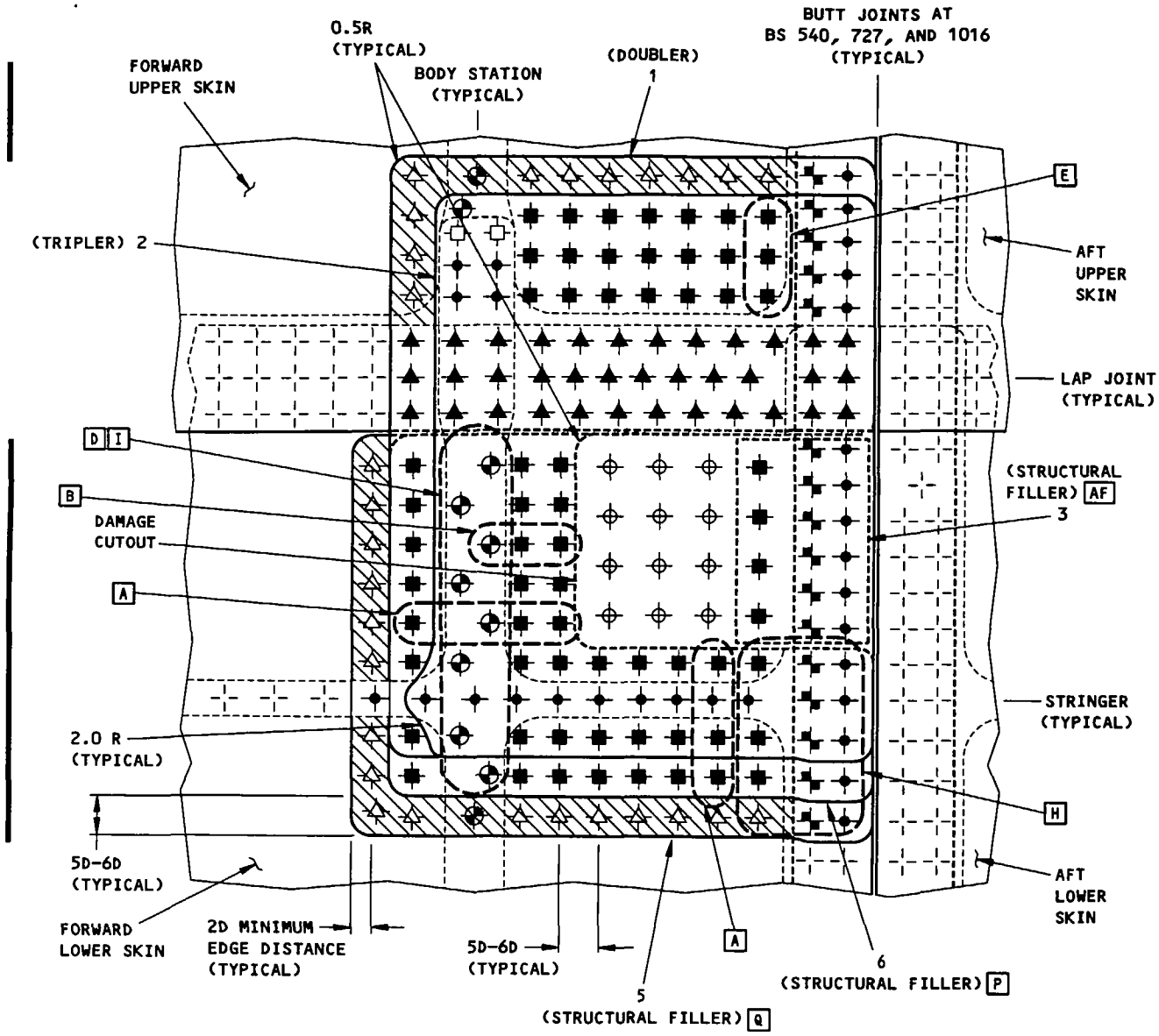

CRITICAL FASTENER ROW

SUBSEQUENT INSPECTIONS ARE NECESSARY FOR CATEGORY B REPAIRS. SEE TABLE VIII FOR INSPECTION REQUIREMENTS.

BODY JOINT AND LAP SPLICE REPAIR - LOWER SKIN AND DOUBLER CUTOUT AT A BUTT JOINT AND BELOW A LAP SPLICE, CUM LINE NUMBER 292 AND ON
DETAIL XXX V X Z

General Fuselage Skin Repair
Figure 48 (Sheet 57)

BOEING PROPRIETARY - Copyright © - Unpublished Work - See title page for details.

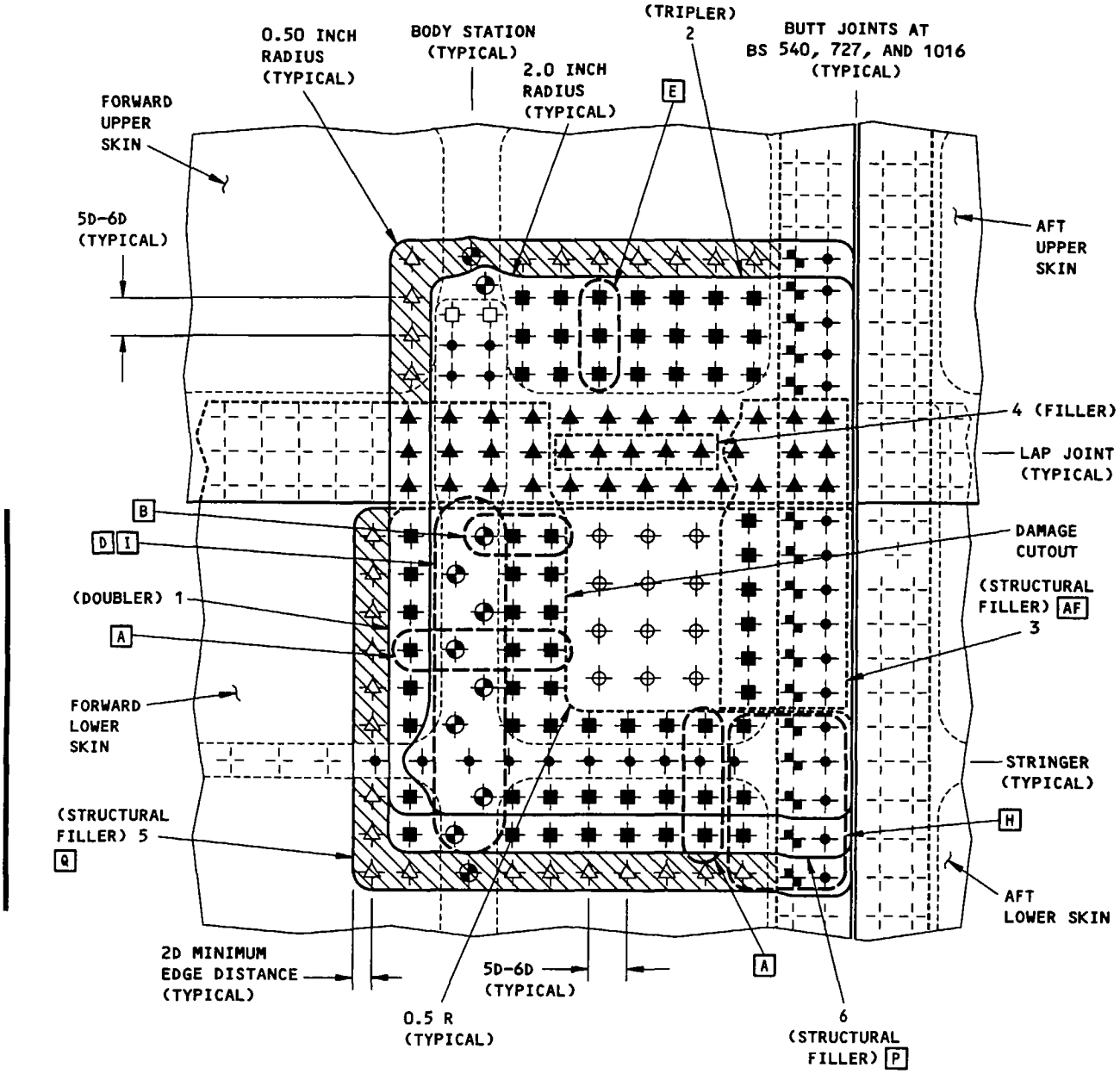

CRITICAL FASTENER ROW

SUBSEQUENT INSPECTIONS ARE NECESSARY FOR CATEGORY B REPAIRS. SEE TABLE VIII FOR INSPECTION REQUIREMENTS.

BUTT JOINT AND LAP SPLICE REPAIR - LOWER SKIN AND DOUBLER CUTOUT AT A BUTT JOINT AND AT A LAP SPLICE, CUM LINE NUMBER 292 AND ON
DETAIL XXXI V X Z

General Fuselage Skin Repair
Figure 48 (Sheet 58)

BOEING PROPRIETARY - Copyright © - Unpublished Work - See title page for details.

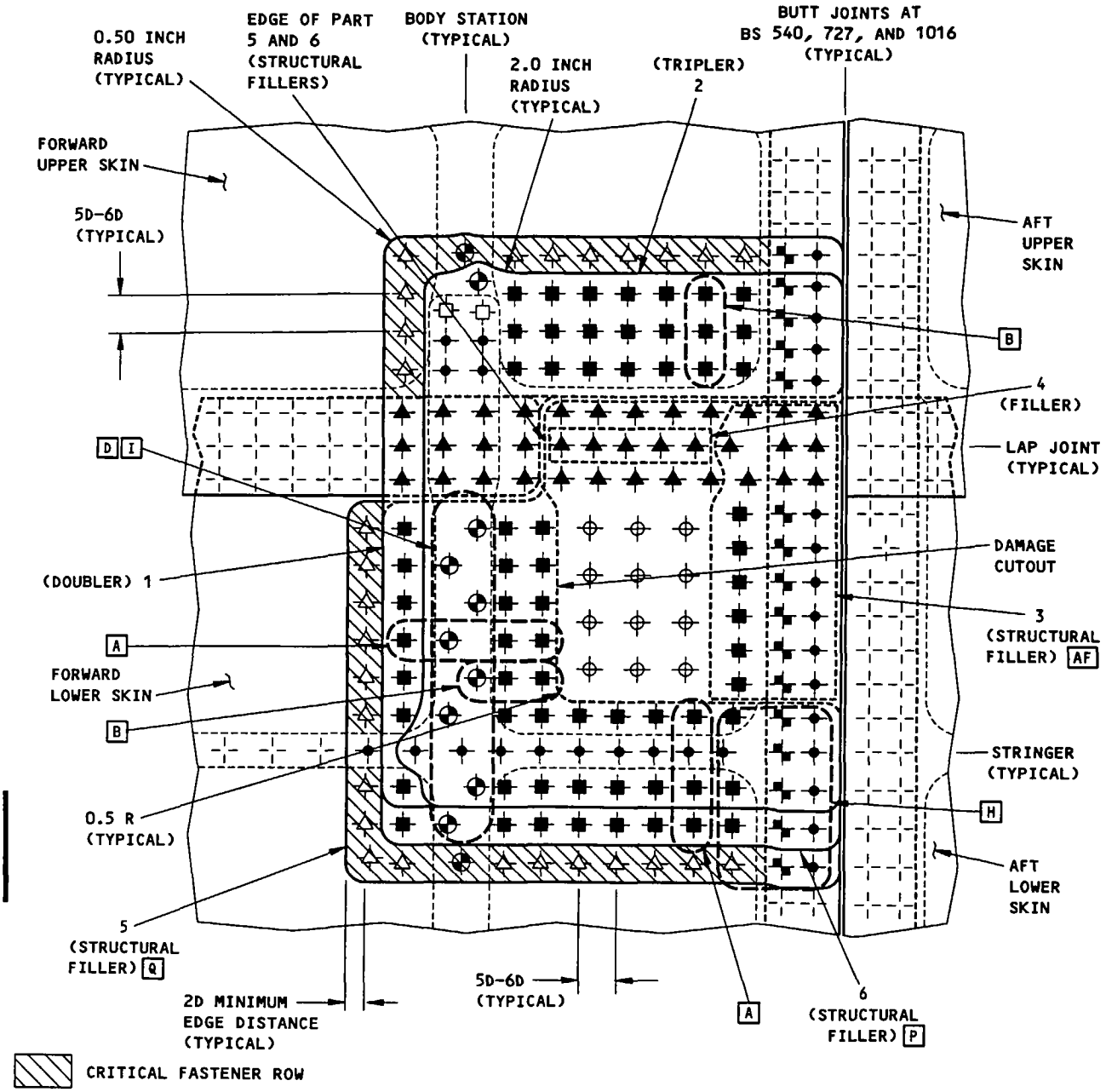

SUBSEQUENT INSPECTIONS ARE NECESSARY FOR CATEGORY B REPAIRS. SEE TABLE VIII FOR INSPECTION REQUIREMENTS.

BUTT JOINT AND LAP SPLICE REPAIR - UPPER AND LOWER SKIN AND DOUBLER CUTOUT AT A BUTT JOINT AND AT AND BELOW A LAP SPLICE, CUM LINE NUMBER 292 AND ON DETAIL XXXII V X Z

General Fuselage Skin Repair
Figure 48 (Sheet 59)

BOEING PROPRIETARY - Copyright © - Unpublished Work - See title page for details.

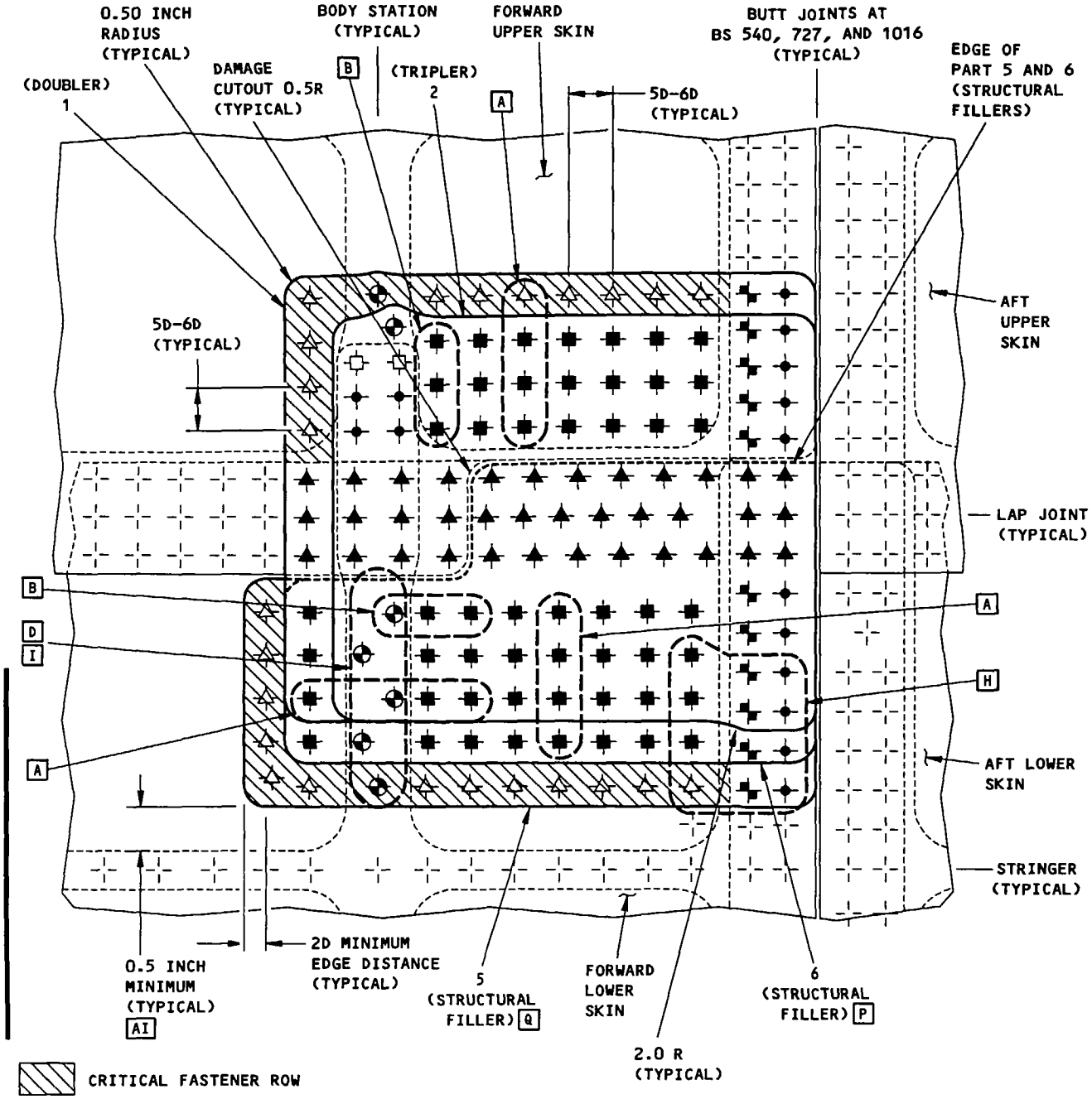

CRITICAL FASTENER ROW

SUBSEQUENT INSPECTIONS ARE NECESSARY FOR CATEGORY B REPAIRS. SEE TABLE VIII FOR INSPECTION REQUIREMENTS.

BUTT JOINT AND LAP SPLICE REPAIR - UPPER SKIN AND DOUBLER CUTOUT AT A BUTT JOINT AND AT A LAP SPLICE, CUM LINE NUMBER 292 AND ON DETAIL XXXIII V X AC

General Fuselage Skin Repair
Figure 48 (Sheet 60)

BOEING PROPRIETARY - Copyright © - Unpublished Work - See title page for details.

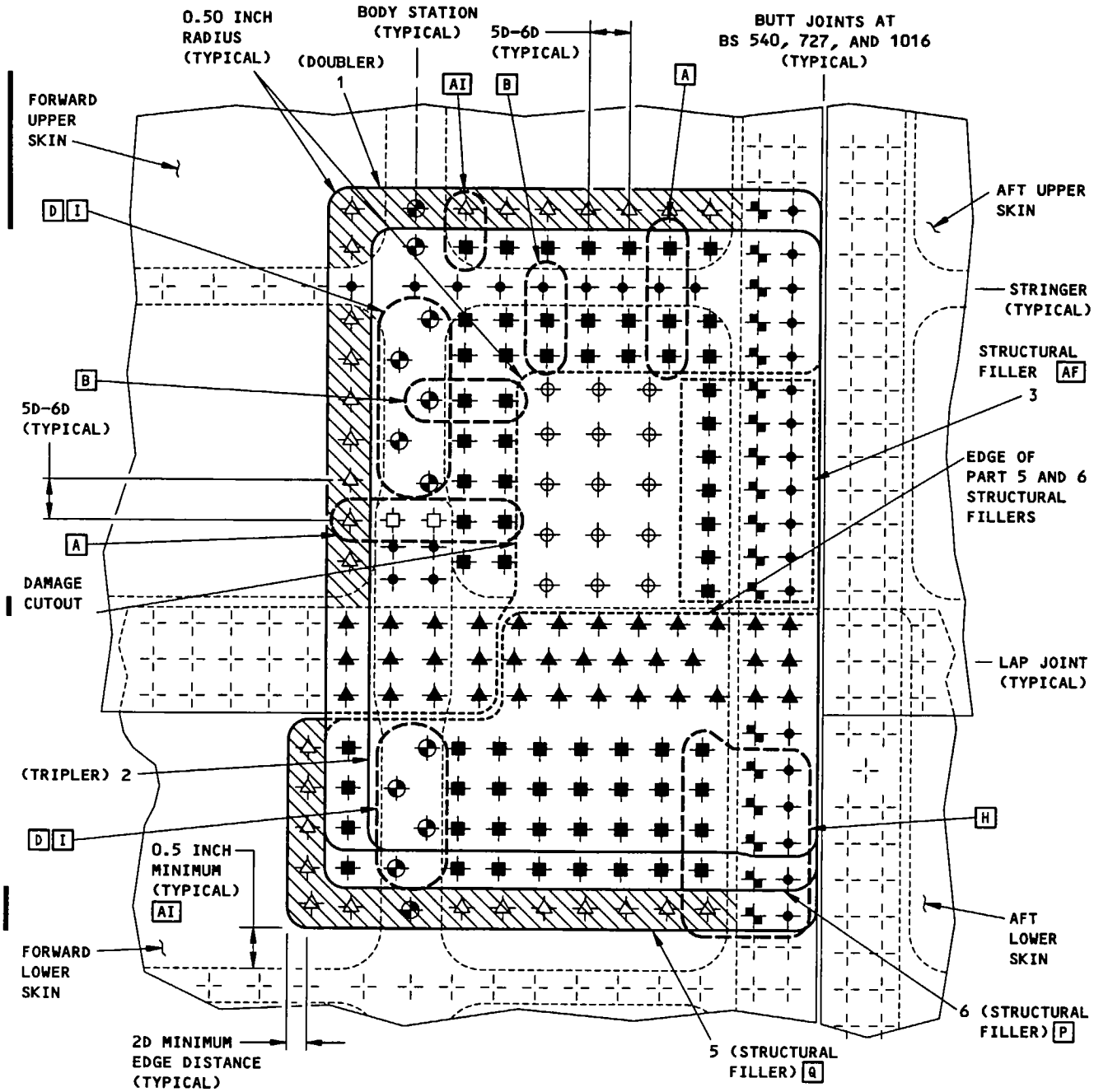

CRITICAL FASTENER ROW

SUBSEQUENT INSPECTIONS ARE NECESSARY FOR CATEGORY B REPAIRS. SEE TABLE VIII FOR INSPECTION REQUIREMENTS.

BUTT JOINT AND LAP SPLICE REPAIR - UPPER SKIN AND DOUBLER CUTOUT AT BUTT JOINT AND AT AND ABOVE A LAP SPLICE CUM LINE NUMBER 292 AND ON DETAIL XXXIV V X Z

General Fuselage Skin Repair
Figure 48 (Sheet 61)

BOEING PROPRIETARY - Copyright © - Unpublished Work - See title page for details.

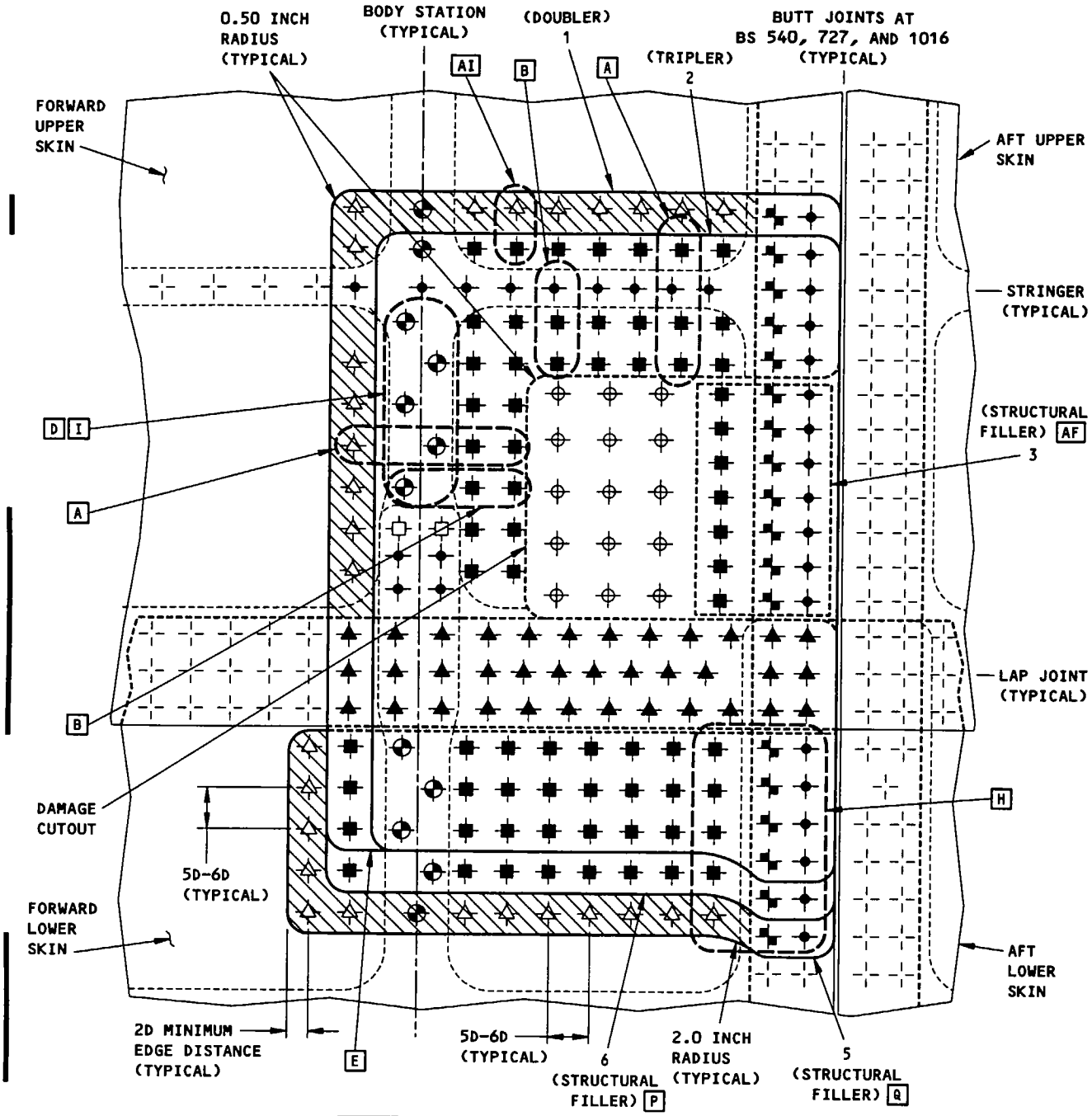

SUBSEQUENT INSPECTIONS ARE NECESSARY FOR CATEGORY B REPAIRS. SEE TABLE VIII FOR INSPECTION REQUIREMENTS.

BUTT JOINT AND LAP SPLICE REPAIR - UPPER SKIN AND DOUBLER CUTOUT AT A BUTT JOINT AND ABOVE A LAP SPLICE, CUM LINE NUMBER 292 AND ON DETAIL XXXV V X Z

General Fuselage Skin Repair
Figure 48 (Sheet 62)

BOEING PROPRIETARY - Copyright © - Unpublished Work - See title page for details.

CATEGORY B REPAIR AND SSI F-39F, G AND H INSPECTION REQUIREMENTS		
INSPECTION THRESHOLD	REPEAT INSPECTION ALTERNATIVES	
	METHOD	INTERVAL
AD	U	U
Note: INSPECT SKIN AROUND THE FIRST ROW OF FASTENERS ALONG THE EDGE OF THE REPAIR DOUBLER AND STRUCTURAL FILLER IF EXIST, AS SHOWN IN DETAILS XXXVI, XXXVII, OR XXXVIII AS APPLICABLE.		

TABLE VIII

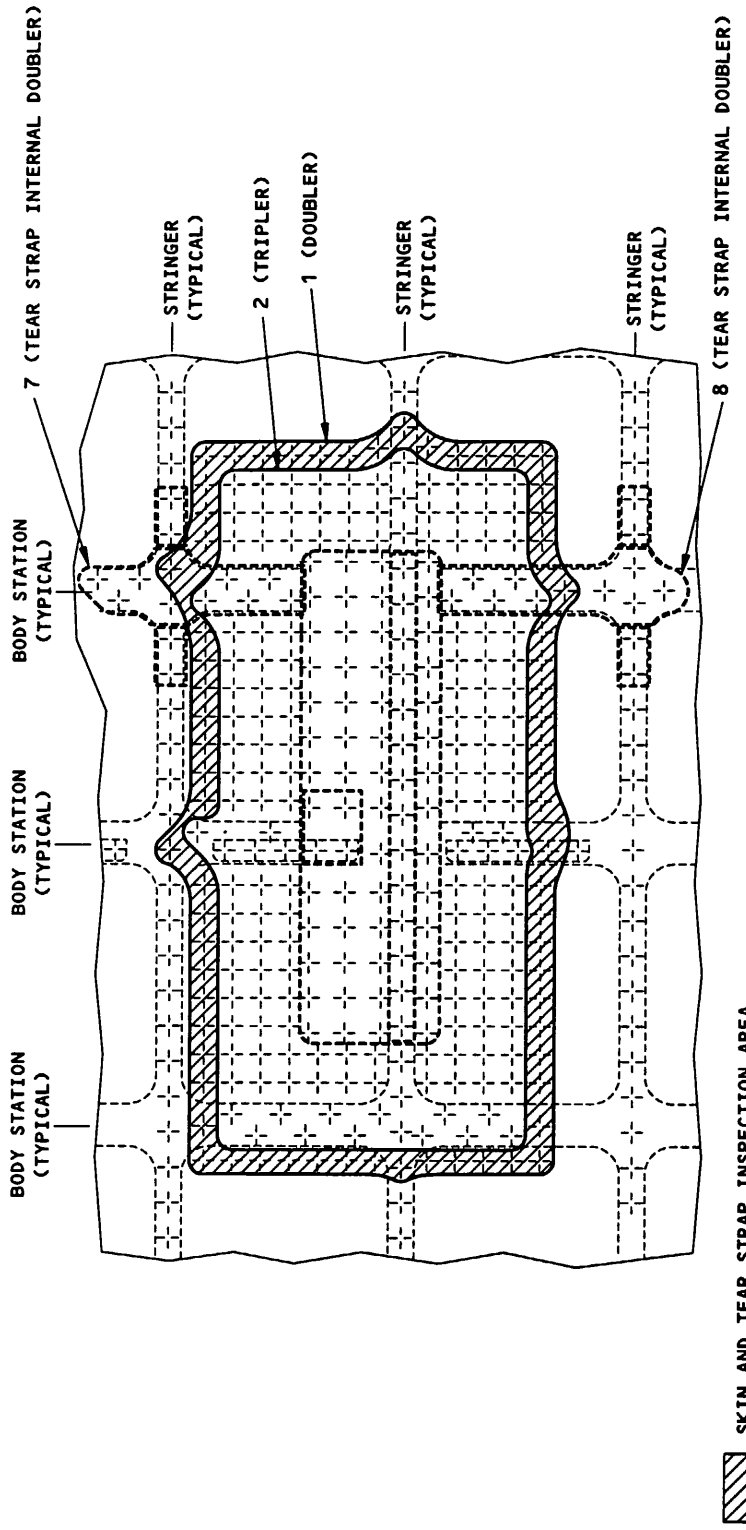

General Fuselage Skin Repair
Figure 48 (Sheet 63)

BOEING PROPRIETARY - Copyright © - Unpublished Work - See title page for details.

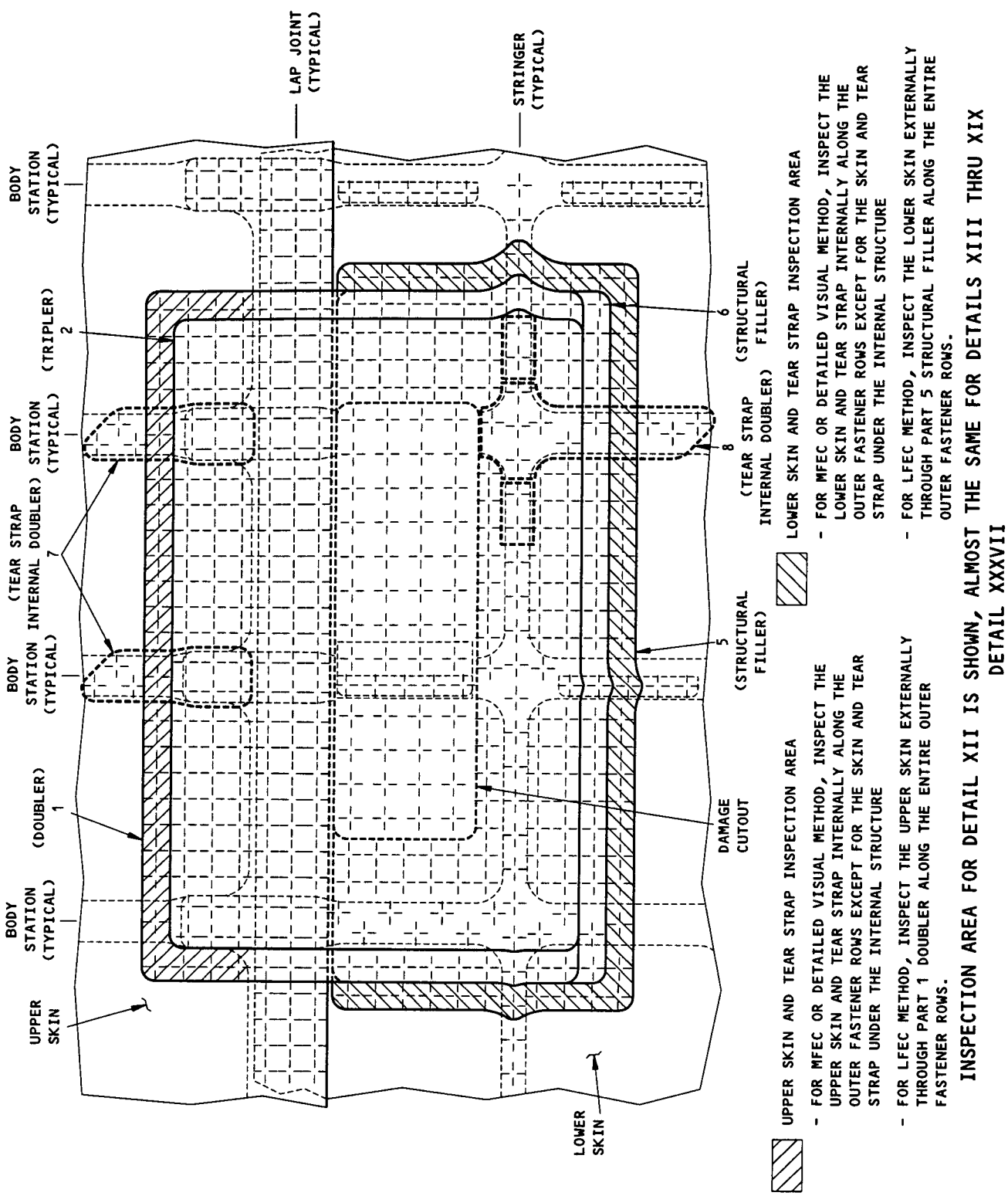

General Fuselage Skin Repair
Figure 48 (Sheet 64)

BOEING PROPRIETARY - Copyright © - Unpublished Work - See title page for details.

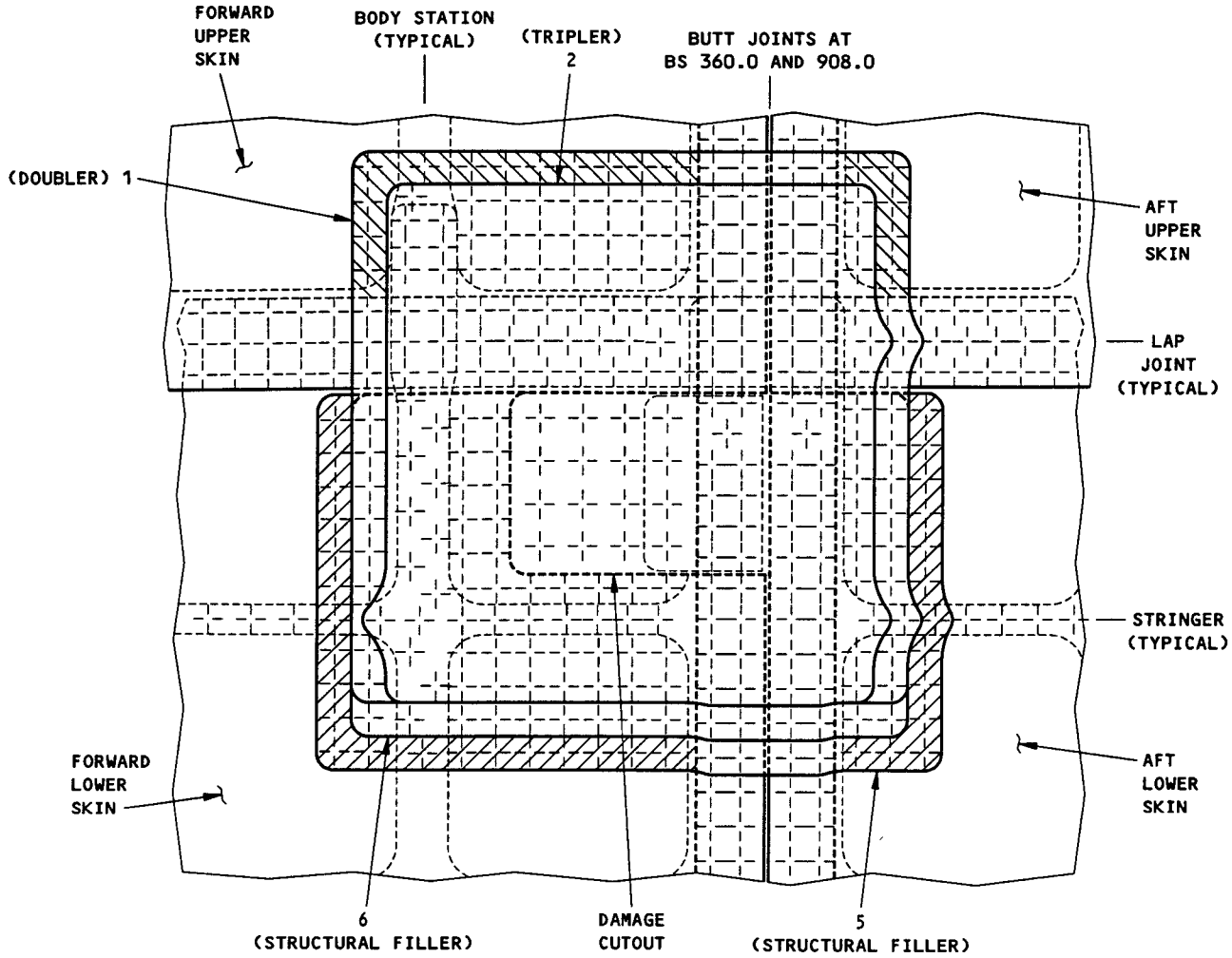

UPPER SKIN AND TEAR STRAP INSPECTION AREA

- FOR MFEC OR DETAILED VISUAL METHOD, INSPECT THE UPPER SKIN AND TEAR STRAP INTERNALLY ALONG THE OUTER FASTENER ROWS EXCEPT FOR THE SKIN AND TEAR STRAP UNDER THE INTERNAL STRUCTURE
- FOR LFEC METHOD, INSPECT THE UPPER SKIN EXTERNALLY THROUGH PART 1 DOUBLER ALONG THE ENTIRE OUTER FASTENER ROWS.

LOWER SKIN AND TEAR STRAP INSPECTION AREA

- FOR MFEC OR DETAILED VISUAL METHOD, INSPECT THE LOWER SKIN AND TEAR STRAP INTERNALLY ALONG THE OUTER FASTENER ROWS EXCEPT FOR THE SKIN AND TEAR STRAP UNDER THE INTERNAL STRUCTURE
- FOR LFEC METHOD, INSPECT THE LOWER SKIN EXTERNALLY THROUGH PART 5 STRUCTURAL FILLER ALONG THE ENTIRE OUTER FASTENER ROWS.

INSPECTION AREA FOR DETAIL XXIV IS SHOWN, ALMOST THE SAME FOR DETAILS XX THRU XXIII AND DETAILS XXV THRU XXXV DETAIL XXXVIII

General Fuselage Skin Repair
Figure 48 (Sheet 65)

BOEING PROPRIETARY - Copyright © - Unpublished Work - See title page for details.

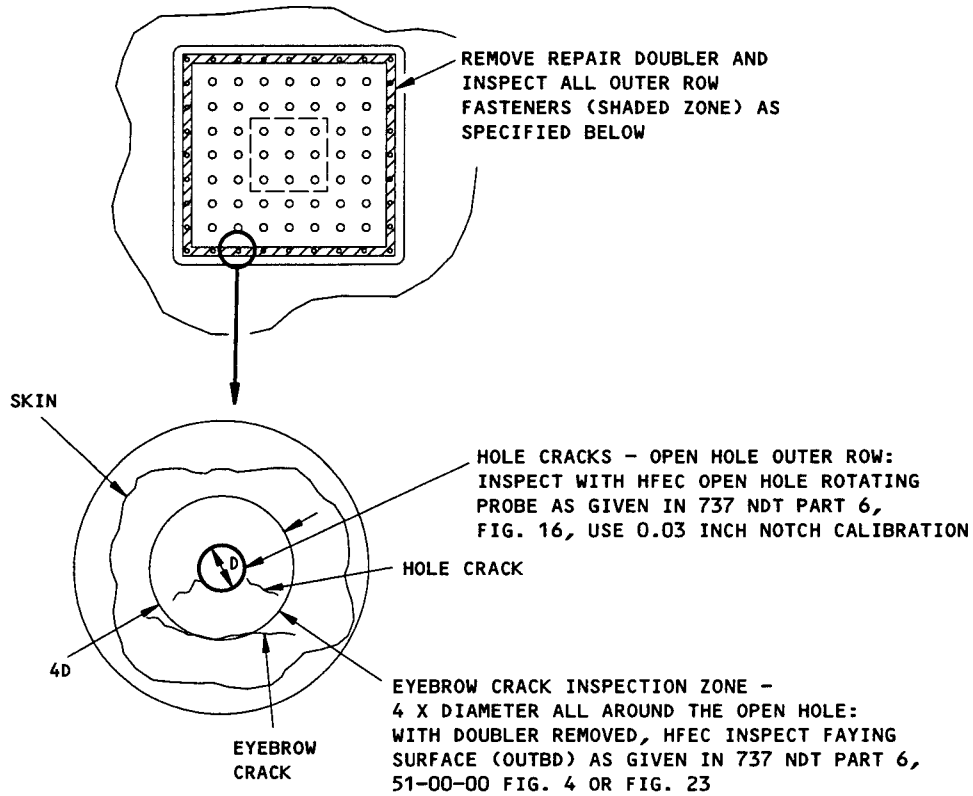

Reference telex: _____

Aircraft: _____ Current cyc: _____ Date: _____

Repair Location: _____ Stringer _____ Body Station _____

Age of repair: _____ years _____ cycles _____

Struct. Details: Doubler thickness: _____ inch Material _____

Outer row fasteners: Type _____ Size _____

Spacing _____ Edge Margin _____

Inspection Results: Cracks?: _____ No _____ Yes (provide details)

Non-Production Countersink Holes: _____ No _____ Yes

Please return this information to:

Boeing Commercial Airplane Company
Spares Distribution Center
Repair Overhaul and Exchange Services
2201 South 142nd, Door W10
Seatac, WA 98168
USA

Attention: Airline Support Manager
Forward to 737 Post Production
Fuselage Stress, for engineering evaluation

INSPECTION REQUIREMENTS/WORKSHEET FOR EXISTING REPAIRS
DETAIL XXXIX

General Fuselage Skin Repair
Figure 48 (Sheet 66)

BOEING PROPRIETARY - Copyright © - Unpublished Work - See title page for details.

	CRITICAL STRUCTURES RULES	MECH	QC
1	EXTEND THE DOUBLER A MINIMUM OF FOUR FASTENER ROWS BEYOUND ALL SIDES OF THE CUTOUT. A		
2	EXTEND THE TRIPLER A MINIMUM OF THREE FASTENER ROWS BEYOND ALL SIDES OF THE CUTOUT. NO MATTER HOW MANY ROWS THE REPAIR IS EXTENDED BEYOND THE CUTOUT, THE TRIPLER MUST ALWAYS END ONE FASTENER ROW LESS THAN THE DOUBLER. B		
3	IF THE DOUBLER ENDS ON A STRINGER OR TEAR STRAP, EXTEND THE DOUBLER A MINIMUM OF TWO FASTENER ROWS BEYOND THE STRINGER AND ONE FASTENER ROW BEYOND THE TEAR STRAP. C		
4	STAGGER FASTENERS COMMON TO THE REPAIR DOUBLER, TRIPLER AND TEAR STRAP. SEE DETAIL III THROUGH DEATIL IV FOR STAGGERED FASTENER REQUIREMENTS. D		
5	IF THE TEAR STRAP HAS BEEN CUT, A MINIMUM OF FIVE FASTENERS ARE NEEDED COMMON TO THE REPAIR DOUBLER, TEAR STRAPS AND TRIPLER AND A MINIMUM OF ONE ADDITIONAL FASTENER COMMON TO THE TEAR STRAP AND DOUBLER OR STRUCTURAL FILLER. F		
6	MAINTAIN A MINIMUM OF 1.5D ON THE TEAR STRAP. USE A MINIMUM OF 0.75 INCH SPACING AT THE OUTER THREE FASTENERS COMMON TO THE TEAR STRAP AND REPAIR DOUBLER AND TRIPLER. SEE DETAIL V FOR FASTENER REQUIREMENTS. G		
7	OVERDRIVE RIVETS TO A MINIMUM 1.4 TIMES THE DIAMETER. THIS IS PARTICULARLY CRITICAL AT THE OUTER ROW OF THE REPAIR. N		
8	DO NOT END THE REPAIR DOUBLER COMMON TO A LAP SPLICE. IF A REPAIR DOUBLER ENDS WITHIN 3 INCHES FROM THE UPPER OR LOWER ROW OF THE LAP SPLICE, THEN EXTEND THE REPAIR DOUBLER A MINIMUM OF THREE FASTENER ROWS BEYOND THE LAP SPLICE. E		
9	NEW FASTENERS MUST BE SPACED BETWEEN 5D-6D.		
10	IF THE REPAIR DOUBLER ENDS IN THE BUTT JOINT FASTENER ROWS OR ONE FASTENER ROW FROM THE BUTT JOINT AT BS 540, BS727, OR BS 1016, EXTEND THE REPAIR DOUBLER AND TRIPLER TO THE EDGE OF BUTT JOINT. IF THE REPAIR IS AT BS 360 OR BS 908 THE REPAIR DOUBLER MUST EXTEND A MINIMUM OF 4 ROWS BEYOND THE BUTT JOINT. H		
11	WHEN CUTTING OUT THE DAMAGE, ALWAYS MAINTAIN A MINIMUM OF 1.7D FROM THE FASTENERS AND A MINIMUM OF 0.5 INCH TRIM RADIUS FINISH TO A 63 RMS OR BETTER.		
12	INSPECT ALL INITIAL FASTENERS COMMON TO THE REPAIR FOR CRACKS.		
13	INSTALL REPAIR PART WET WITH BMS 5-95 SEALANT.		
14	INSTALL PART 7 OR 8 (TEAR STRAP INTERNAL DOUBLER) AT ALL LOCATIONS WHERE THE TEAR STRAPS HAVE BEEN CUT AND THERE IS NO SHEAR TIE. EXTEND THE TEAR STRAP INTERNAL DOUBLERS A MINIMUM OF THREE FASTENERS PAST THE PART 1 (DOUBLER). PART 7 OR 8 (TEAR STRAP INTERNAL DOUBLER) CAN BE A DIFFERENT SHAPE AT DIFFERENT LOCATIONS. R		
15	ENSURE THAT STRUCTURAL FILLERS ARE INSTALLED AT LOCATIONS WHERE THE CUTOUT IS COMMON TO SHEAR TIE AND BUTT JOINT. MAKE SURE THAT THE DAMAGE CUTOUT IS LARGE ENOUGH TO LET TWO FASTENER ROWS FOR INSTALLATION. AF		
16	EXTEND THE PART 1 (DOUBLER) AND/OR PART 5 (STRUCTURAL FILLER) ONE ROW OF FASTENER BEYOND THE PART TWO (TRIPLER) AND/OR PART 6 (STRUCTURAL FILLER)		
17	WHEN REPLACING INITIAL REPAIR: - MAKE SURE THAT PREVIOUS INTERNAL REPAIRS DID NOT HAVE COUNTERSUNK FASTENERS WHICH KNIFE EDGED SKIN. - HFEC INSPECTION OF THE OUTER ROW FASTENERS FOR EYE-BROW OR HOLE CRACKS AS SHOWN IN DETAIL LXII. - MAKE SURE THAT THE FASTENER SPACING AND SIZE ARE WITHIN THE ACCEPTABLE LIMITS OF THE TABLE VI.		
18	EXTEND THE NEW REPAIR DOUBLER OR FILLER AS APPLICABLE A MINIMUM OF 2 FASTENER ROWS BEYOND THE CRITICAL ROW OF THE PREVIOUS REPAIR OUTER FASTENERS ROW. AE		

MECHANIC CHECK LIST FOR REPAIR
DETAIL XL

General Fuselage Skin Repair
Figure 48 (Sheet 67)

BOEING PROPRIETARY - Copyright © - Unpublished Work - See title page for details.

	CRITICAL STRUCTURES RULES (CONT)	MECH	QC
19	THE REPAIR MUST STOP A MINIMUM OF 0.5 INCH BEFORE A LONGITUDINAL CHEM-MILLED STEP EDGE. THIS WILL PERMIT YOU TO DO AN EXTERNAL INSPECTION OF THE CHEM-MILLED STEP. IF THE REPAIR STOPS LESS THAN 0.5 INCH BEFORE A LONGITUDINAL CHEM-MILLED STEP, EXTEND THE REPAIR A MINIMUM OF TWO FASTENER ROWS PAST THE LONGITUDINAL CHEM-MILLED STEP EDGE. THIS WILL GIVE A FAILSAFE LOAD PATH IF THERE WERE UNDETECTED INITIAL CRACKS IN THE CHEM-MILLED STEP. AI		

MECHANIC CHECK LIST FOR REPAIR
DETAIL XL

General Fuselage Skin Repair
Figure 48 (Sheet 68)

BOEING PROPRIETARY - Copyright © - Unpublished Work - See title page for details.

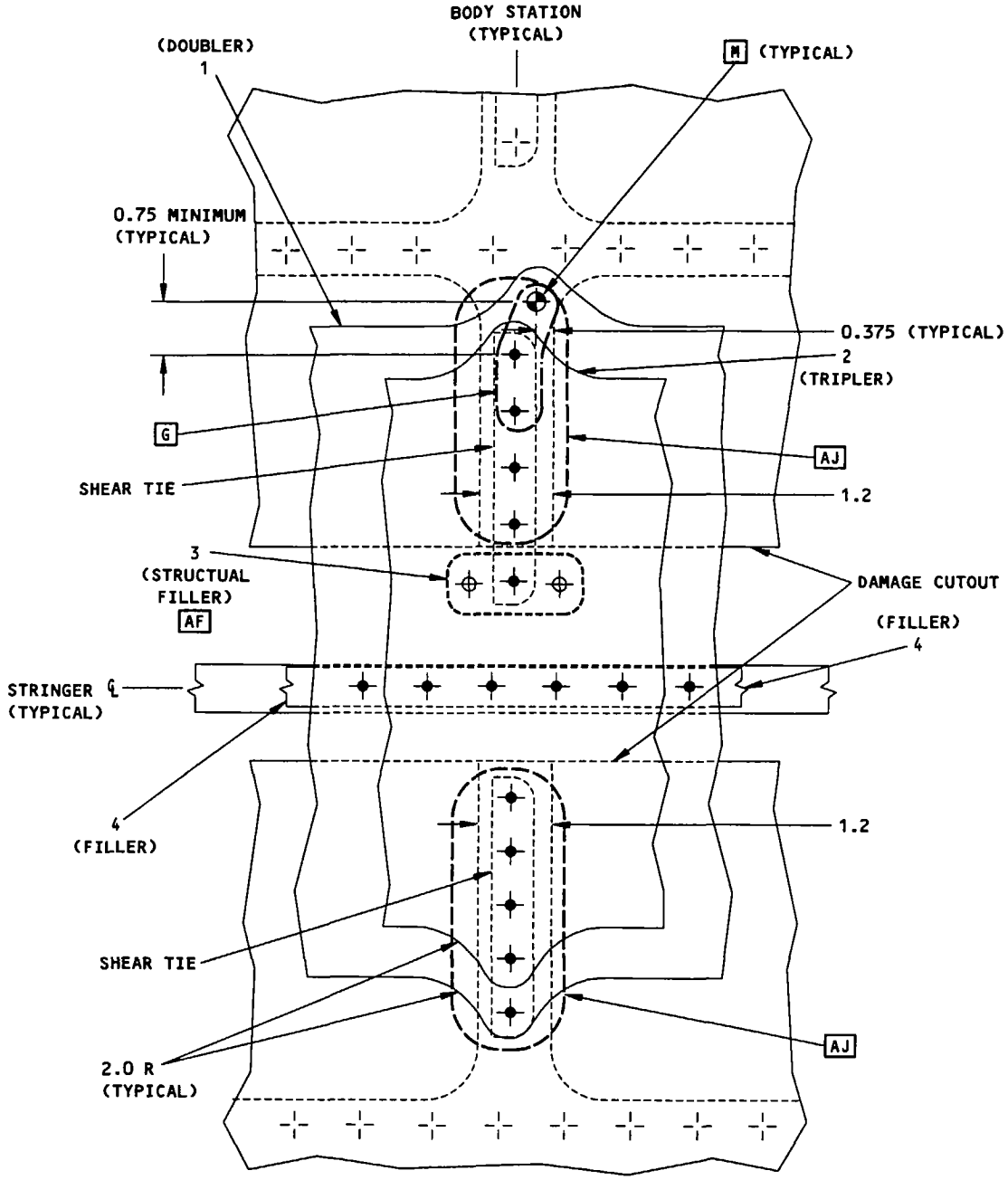

1.2 INCH-WIDE TEAR STRAP FASTENER LAYOUT ABOVE OR BELOW A TEARSTRAP CUTOUT AND COMMON TO A SHEAR TIE (TYPICAL IN SECTION 41)
DETAIL XLI

General Fuselage Skin Repair
Figure 48 (Sheet 69)

BOEING PROPRIETARY - Copyright © - Unpublished Work - See title page for details.

APPLICABILITY

THIS REPAIR FIGURE IS APPLICABLE TO DAMAGED FUSELAGE SKINS OR SKINS AND BONDED DOUBLERS IN SECTION 41 FORWARD OF STA 259.5 THAT HAVE DAMAGE IN THE AREAS SHOWN IN DETAIL I.

DO NOT USE THIS REPAIR IF THE REPAIR PARTS WILL EXTEND INTO THE SHADED AREAS THAT ARE SHOWN IN DETAIL I AND:

- AT THE FUSELAGE STATION 178 BULKHEAD INSTALLATION.
- IN THE AREA OF THE PITOT STATIC PROBES AND PORTS. REFER TO SRM 51-70, FIGURE 5.
- AT THE INSPECTION AREA OF THE 737-53-1111 SERVICE BULLETIN FOR AIRPLANES WITH LINE NUMBERS 1-330.

DO NOT USE THIS FIGURE IF:

- THE MAXIMUM SIZE OF A SINGLE, CONTINUOUS REPAIR WILL BE MORE THAN 1600 SQUARE INCHES. CONTACT THE BOEING COMPANY FOR AN AERODYNAMIC ANALYSIS.
- THE SUM OF THE REPAIRS DONE WITH THIS FIGURE, FIGURE 46 AND FIGURE 48 ON THE SAME AIRPLANE IS MORE THAN 32,400 SQUARE INCHES. CONTACT THE BOEING COMPANY.

IF THE SUM OF ALL REPAIRS DONE WITH THIS FIGURE, FIGURE 46 AND FIGURE 48 ON THE SAME AIRPLANE WILL BE MORE THAN 8100 SQUARE INCHES THEN A PERFORMANCE ADJUSTMENT MUST BE APPLIED. V

REPAIR INSTRUCTIONS

NOTE: The details shown in this figure are general repair procedures. The specific damage size, shape and location can be different for actual repairs. The intent of this repair is to give general guidelines to permit you to design repairs for your specific damage. The dimensions and shape of the repair can be different than what is shown. To make sure that your repair is structurally satisfactory, you must obey the general repair rules as given in the flagnotes.

1. Get access to the damaged area.
2. Determine if a repair is permitted in the damaged area. See Detail I for the restricted areas.
3. Refer to Table I to determine which detail applies to the damage. Also refer to Detail II and Table IV to determine the thickness of the upper skin assembly at the lap joint, if your repair goes over the lap joint. If you cannot find a detail that is applicable to your damage, then do not use this repair. It is recommended that you contact Boeing for repair instruction.
4. Lay out the repair profile and the necessary fastener pattern as shown in the respective detail. If all of the requirements cannot be met, do not use this repair. It is recommended that you contact the Boeing Company for repair instructions.
5. If two repairs are within three fastener rows of each other, the repairs must be combined.
6. If the repair is common to the butt joint at STA 259.5 or a lap joint, do the steps that follow:
   A. Do a close visual inspection for signs of corrosion. Look for bulges in the skin between fasteners, and missing or dished fastener heads.
   B. Remove the fasteners that are necessary for the repair.
   C. Do a close visual inspection of the open holes for signs of corrosion or disbond. Look for white powder when fasteners are drilled out.
   D. If you find corrosion or disbond that is not outside of the limits of this repair as shown in Detail I, then cut out the damage and do the repair. If your damage is outside the limits of this repair as shown in Detail I, it is recommended that you contact The Boeing Company for repair instructions.
   E. Do a High Frequency Eddy Current (HFEC) countersink and hole probe inspection of all the fastener holes in the repair area. Refer to NDT Part 6, 53-30-00, Figure 4 and NDT Part 6, 51-00-00, Figure 16.
      a. Use the above inspections to look for cracks in the skin, bonded doubler and butt joint splice strap.
      b. If there is a crack that is not more than the limits of this repair, then cut and remove the damaged part of the joint. Combine both repairs into one repair.
      c. If the repair doubler is common to the STA 178 butt joint, contact Boeing for repair instructions.
7. Remove the fasteners as necessary.

Fuselage General Skin Repair Between BS 178 and BS 259.5
Figure 49 (Sheet 1)

BOEING PROPRIETARY - Copyright © - Unpublished Work - See title page for details.

REPAIR INSTRUCTIONS (CONT)

CAUTION: USE SPECIAL CARE TO CUT AND REMOVE THE DAMAGED PART OF THE SKIN AND DOUBLER. DO NOT GOUGE, SCRATCH, OR BUCKLE THE STRUCTURE ADJACENT TO THE CUTOUT. IF YOU DAMAGE THE ADJACENT STRUCTURE, MORE REPAIR WORK WILL BE NECESSARY.

8. Carefully cut and remove the damaged part of the skin and doubler. Refer to the applicable detail. Make sure to keep a minimum 0.5 inch radius.

   NOTE: Use a thin steel sheet between the skin and stringer, or frame structure, or other adjacent structure as necessary to prevent damage to the adjacent structure.

9. Remove the steel sheet, if one was used.
10. Do an HFEC inspection along the edge of the cutout. Make sure there are no cracks, corrosion or disbond between the skin and doubler. If there is no more damage, make the cutout larger by 0.04 inch. All cutout edges must have a surface smoothness of 63 microinches Ra or better. Refer to NDT Part 6, 51-00-00, Figure 4 for the HFEC procedure.
11. Make the repair parts as given in the applicable detail.

CAUTION: WHEN YOU MAKE THE REPAIR PARTS, MAKE SURE THAT ALL APPLICABLE REQUIREMENTS OF SRM 51-20-1, PARAGRAPHS 9 THRU 12 ARE MET. REVERSE FORMING IS NOT PERMITTED. SHIMS ARE NOT PERMITTED BETWEEN THE REPAIR PARTS AND THE FUSELAGE SKIN, AND AT THE LAP SPLICE AREA.

12. Pre-form or roll the repair parts to match the fuselage skin contour before they are installed. Refer to SRM 51-20-1 for Sheet Metal Materials and SRM 51-70 Figure 4 for repair part surface smoothness.
13. Assemble the repair parts. See the applicable detail.
14. Drill the fastener holes.

    NOTE: Use only 5D-6D fastener spacing. The fastener pattern does not have to line up with the fastener pattern of adjacent structure.

15. Remove the repair parts.
16. Remove all nicks, scratches, gouges, burrs, and sharp edges from the repair parts and the skin. All surfaces must have a surface smoothness of 125 microinches Ra or better, unless a different finish is specified.
17. Apply a chemical conversion coating to the repair parts and the bare surfaces of the initial parts. Refer to SRM 51-10-2.
18. Apply one layer of BMS 10-79, Type II or III primer to the repair parts and the bare surfaces of the initial parts. Refer to SOPM 20-44-04. As an alternative apply a layer of BMS 10-11, Type I primer. Refer to SOPM 20-41-02.
19. Install repair washers in the countersink holes in the skin panels that will be covered by the repair parts. Install the repair washers with BMS 5-95 sealant. Refer to SRM 51-30-8.
20. Make sure that the mating surfaces of the initial and repair parts are clean. Refer to SRM 51-20-4.
21. Assemble the repair parts with BMS 5-95 sealant on all of the mating surfaces and in all the gaps.
22. Install the fasteners. Refer to SRM 51-30. Fasteners that are not made of aluminum must be installed wet with BMS 5-95 sealant in transition fit holes. Torque all hex drive bolts to 25 to 35 inch-pounds.

    NOTE: If the production fasteners common to the repair are not rivets, 3/16 lock-bolts or hex drive bolts, then either install the same type fastener as the production fastener or contact The Boeing Company. Use the requirements on the respective production drawings to install these fasteners in the holes.

23. Retorque the hex drive bolts in less than the squeeze-out time for the sealant as given in the BMS 5-95 specification. Refer to SRM 51-30-4.
24. Apply a fillet seal along the edges of the repair parts.
25. Apply a layer of BMS 3-23, Type 2 corrosion inhibiting compound onto the internal surface of the entire repair area after the BMS 5-95 sealant has cured. Refer to SRM 51-10-2.
26. Apply a finish to the external surface of the repair area. Refer to AMM 51-21.

NOTES

- THESE REPAIRS (DETAILS III THRU XIX) ARE CATEGORY A AND NO SUPPLEMENTAL INSPECTIONS ARE NECESSARY IF CONDITION 1 OR 2 IS MET:

  1. a) THE CRITICAL FASTENER ROWS IN THE SKIN CAN BE VISUALLY INSPECTED FROM THE INSIDE.

Fuselage General Skin Repair Between BS 178 and BS 259.5
Figure 49 (Sheet 2)

BOEING PROPRIETARY - Copyright © - Unpublished Work - See title page for details.

NOTES (CONT)

b) THE MINIMUM SKIN THICKNESS AT THE CRITICAL FASTENER ROWS IS EQUAL TO OR THICKER THAN 0.056 INCH.

2. a) THE LENGTH OF THE REPAIR IN THE LONGITUDINAL DIRECTION IS LESS THAN OR EQUAL TO 12 INCHES.

b) THE CRITICAL FASTENER ROWS IN THE SKIN CAN BE VISUALLY INSPECTED FROM THE INSIDE.

c) NO OTHER REPAIR DOUBLER IS INSTALLED WITHIN 3 INCHES IN THE LONGITUDINAL DIRECTION.

- IF THIS REPAIR IS NOT CATEGORY A, THEN IT IS CATEGORY B. THE CATEGORY B REPAIR HAS FAA APPROVAL IF YOU DO THE SUPPLEMENTAL INSPECTIONS GIVEN IN TABLE V. INCORPORATION OF THESE INSPECTION REQUIREMENTS INTO THE AIRPLANE'S MAINTENANCE PROGRAM SATISFIES THE DAMAGE TOLERANCE ASSESSMENT OF THE REPAIR SPECIFIED IN THE REPAIR ASSESSMENT PROGRAM. THIS ASSESSMENT CAN BE DONE AFTER YOU RELEASE THE AIRCRAFT TO SERVICE. REFER TO SRM 51-00-6 FOR GENERAL DATA ABOUT THE REPAIR ASSESSMENT PROGRAM. SEE DETAILS XX, XXI AND XXII AS APPLICABLE FOR INSPECTION AREAS.
- THESE REPAIRS (DETAILS III THRU XIX) WILL NOT HAVE AND EFFECT ON THE STRUCTURAL SIGNIFICANT ITEMS (SSI) GIVEN IN SRM 51-00-4, FIGURE 3.
- ALL DIMENSIONS ARE IN INCHES, UNLESS SHOWN DIFFERENTLY.
- D = FASTENER DIAMETER.
- USE A MINIMUM OF 2D EDGE MARGIN, UNLESS SHOWN DIFFERENTLY.
- USE 5D-6D SPACING BETWEEN REPAIR FASTENERS.
- MAKE SURE THAT ALL PROTRUDING HEAD RIVETS IN THE OUTER ROW ARE OVERDRIVEN TO A MINIMUM OF 1.4 TIMES THE DIAMETER.
- MACHINED SURFACES AND ALL CUTOUT EDGES MUST HAVE A SURFACE SMOOTHNESS OF 125 MICROINCHES Ra OR BETTER, UNLESS A DIFFERENT FINISH IS SPECIFIED.
- KEEP A MINIMUM OF 0.5 INCH EXTERNAL RADIUS AND 2.0 INCHES INTERNAL RADIUS ON REPAIR PART CORNERS.
- CHAMFER ALL VISIBLE EDGES OF EXTERNAL REPAIR PARTS THAT ARE THICKER THAN 0.05 INCH. REFER TO SRM 51-70 FIGURE 1 FOR CHAMFER DETAIL.
- WHEN YOU USE THIS REPAIR, REFER TO:
  - AMM 51-21 FOR INTERIOR AND EXTERIOR FINISHES
  - AMM 51-31 FOR SEALS AND SEALING
  - NDT PART 6, 51-00-00, FIG. 16, FOR HFEC ALUMINUM PART FASTENER HOLE INSPECTION. USE A 0.03 INCH NOTCH STANDARD
  - NDT PART 6, 53-30-00, FIG. 4, FOR HFEC COUNTERSINK INSPECTION OF ALUMINUM PARTS
  - SOPM 20-41-02 FOR APPLICATION OF CHEMICAL AND SOLVENT RESISTANT FINISHES
  - SOPM 20-44-04 FOR APPLICATION OF URETHANE COMPATIBLE PRIMER
  - SRM 51-00-4 FOR A LIST OF STRUCTURALLY SIGNIFICANT ITEMS (SSID DETAILS)
  - SRM 51-00-6 FOR REPAIR CATEGORIES, DEFINITIONS AND REPAIR ASSESSMENT PROGRAM INFORMATION
  - SRM 51-10-1 FOR INSPECTION AND REMOVAL OF DAMAGE
  - SRM 51-10-2 FOR PROTECTIVE TREATMENT OF METALS
  - SRM 51-10-6 FOR CORROSION REMOVAL AND SURFACE FINISHING REQUIREMENTS
  - SRM 51-20-1 FOR SHEET METAL MATERIALS
  - SRM 51-20-4 FOR REPAIR SEALING
  - SRM 51-30 FOR FASTENER CODE, REMOVAL AND INSTALLATION, HOLE SIZES, EDGE MARGINS AND SUBSTITUTION
  - SRM 51-30-8 FOR COUNTERSINKING OF HOLES AND USE OF COUNTERSINK REPAIR WASHERS
  - SRM 51-70 FOR AERODYNAMIC SMOOTHNESS REQUIREMENTS.

[A] BEFORE YOU ENLARGE THE FASTENER HOLE, DO AN HFEC COUNTERSINK AND HOLE PROBE INSPECTION. REFER TO NDT, PART 6, 51-00-0, FIGURE 16 AND NDT, PART 6, 53-30-00, FIGURE 4.

[B] IF THE THICKNESS OF PART 6 (STRUCTURAL FILLER) IS 0.040, INSTALL A BACR15BB5D RIVET.

[C] MAKE SURE THAT THE COUNTERSINK DEPTH IS NOT MORE THAN 80 PERCENT OF THE MOST EXTERNAL REPAIR PART (DOUBLER, TRIPLER OR STRUCTURAL FILLER) THICKNESS. IF IT IS MORE THAN 80 PERCENT OF THE REPAIR PART THICKNESS USE A PROTRUDING HEAD FASTENER OF THE SAME TYPE AND SIZE AS THE INITIAL FASTENER.

[D] EXTEND THE DOUBLER A MINIMUM OF FOUR FASTENER ROWS BEYOND ALL SIDES OF THE CUTOUT.

[E] EXTEND THE TRIPLER ONE FASTENER ROW LESS THAN THE DOUBLER BEYOND ALL SIDES OF THE CUTOUT.

[F] IF THE DOUBLER ENDS ON A STRINGER, FRAME OR OTHER UNDERLYING STRUCTURE, EXTEND THE DOUBLER ONE FASTENER ROW BEYOND THE UNDERLYING STRUCTURE.

[G] WHEN THERE IS NO REPAIR TRIPLER, EXTEND THE DOUBLER A MINIMUM OF THREE FASTENER ROWS BEYOND ALL SIDES OF THE CUTOUT.

Fuselage General Skin Repair Between BS 178 and BS 259.5
Figure 49 (Sheet 3)

W39899

BOEING PROPRIETARY - Copyright © - Unpublished Work - See title page for details.

NOTES (CONT)

[H] WHEN THE LOWER SKIN AT A LAP JOINT IS CUT, EXTEND THE DOUBLER AND TRIPLER A MINIMUM OF THREE FASTENER ROWS AROUND THE CUTOUT IN THE LOWER SKIN. END THE DOUBLER AND TRIPLER AT THE SAME FASTENER ROW BELOW THE LAP JOINT.

[I] DO NOT END THE REPAIR DOUBLER COMMON TO A LAP JOINT. IF THE REPAIR DOUBLER ENDS WITHIN 3 INCHES FROM THE UPPER OR LOWER ROW OF THE LAP SPLICE, THEN EXTEND THE REPAIR OVER THE LAP JOINT AS SHOWN IN THE APPLICABLE DETAIL.

[J] IF THE REPAIR DOUBLER ENDS ON ONE OF THE STA 259.5 BUTT JOINT FASTENER ROWS OR WITHIN ONE FASTENER ROW OF A STA 259.5 BUTT JOINT FASTENER ROW, EXTEND THE TRIPLER TO THE EDGE OF THE BUTT JOINT.

[K] IF A DRAIN HOLE IS COMMON TO THE REPAIR, EXTEND THE REPAIR PARTS A MINIMUM OF 3 FASTENERS ALL AROUND THE DRAIN HOLE. DRILL THE DRAIN HOLE THROUGH THE REPAIR PARTS AND REINSTALL THE DRAIN THROUGH THE REPAIR PARTS.

[L] MAKE THE FILLER THE SAME GAGE AS THE INITIAL PART THAT WAS REMOVED.

[M] EXTEND THE EDGE OF THE PART 10 (TRIPLER) OR PART 15 (SECOND TRIPLER) A MINIMUM OF THREE FASTENER ROWS BEYOND THE LOWER ROW OF THE LAP JOINT FASTENERS.

[N] EXTEND THE EDGE OF THE PART 10 (TRIPLER) OR PART 15 (SECOND TRIPLER) A MINIMUM OF ONE FASTENER ROW BEYOND THE UPPER ROW OF THE LAP JOINT FASTENERS.

[O] MAKE SURE THAT STRUCTURAL FILLERS ARE INSTALLED AT LOCATIONS WHERE THE CUTOUT IS COMMON TO A FRAME, STRINGER, LAP JOINT OR BUTT JOINT.

[P] SAME THICKNESS AS LOWER SKIN TRIMMED. INSTALL FILLER BETWEEN PART 6 OR 7 (STRUCTURAL FILLER) AND UNDERLYING STRUCTURE (FRAME OR STRINGER).

[Q] AT S-24 LAP JOINT; THE STRUCTURAL FILLER HAS TO FILL ALL THE TRIM OUT IN THE LOWER SKIN.

[R] IF INITIAL FASTENER IS A 6/32 INCH HEX DRIVE FASTENER OR LOCK-BOLT, INSTALL A BACB30FQ6 HEX DRIVE FASTENER WITH A BACC30M COLLAR.

[S] IF INITIAL FASTENER IS A 6/32 INCH HEX DRIVE FASTENER OR LOCK-BOLT, INSTALL A BACB30FP6 HEX DRIVE FASTENER WITH A BACC30M COLLAR.

[T] REFER TO THE OPERATOR'S REPAIR ASSESSMENT GUIDELINES FOR THE REPEAT INSPECTION INTERVALS AND METHOD ALTERNATIVES.

[U] IF THE CRITICAL FASTENER ROWS HAVE THREE OR LESS INITIAL FASTENER HOLES, IN A SEQUENCE, THE INSPECTION THRESHOLD IS THE LATER OF:

- THE INITIAL SCHEDULED INSPECTION AS GIVEN IN THE OPERATOR'S REPAIR ASSESSMENT PROGRAM (RAP)
- 60,000 FLIGHT CYCLES AFTER THE REPAIR WAS INSTALLED.

IF ONE OR MORE OF THE CRITICAL FASTENER ROWS HAS MORE THAN THREE INITIAL FASTENER HOLES, IN A SEQUENCE, THE INSPECTION THRESHOLD IS THE LATER OF:

- THE INITIAL SCHEDULED INSPECTION AS GIVEN IN THE OPERATOR'S REPAIR ASSESSMENT PROGRAM (RAP)
- 60,000 FLIGHT CYCLES AFTER THE REPAIR WAS INSTALLED, IF THE INITIAL FASTENER HOLES HAVE BEEN ZERO-TIMED
- 4,000 FLIGHT CYCLES AFTER THE REPAIR WAS INSTALLED, IF THE INITIAL FASTENER HOLES HAVE NOT BEEN ZERO-TIMED.

[V] THE PERFORMANCE ADJUSTMENTS ARE GIVEN IN THE AIRPLANE FLIGHT MANUAL APPENDIX TITLED "PERFORMANCE ADJUSTMENTS FOR OPERATIONS WITH EXTENSIVE FUSELAGE REPAIRS". GIVE THE SUM OF ALL THE REPAIRS DONE WITH THIS FIGURE, FIGURE 46 AND FIGURE 48 IN SQUARE INCHES TO THE DISPATCHER FOR SELECTION OF THE APPROPRIATE PERFORMANCE ADJUSTMENT.

FASTENER SYMBOLS

REFERENCE FASTENER LOCATION.

NEW FASTENER LOCATION. INSTALL A BACR15CE5D RIVET.

INITIAL FASTENER LOCATION. IF THE INITIAL FASTENER IS A BACR15CE5D RIVET INSTALL A BACR15DS7D RIVET. IF THE INITIAL FASTENER IS A BACR15CE6D RIVET INSTALL A BACR15CE6D RIVET. [A] [R]

INITIAL FASTENER LOCATION. INSTALL A PROTRUDING HEAD FASTENER OF THE SAME TYPE AND SIZE AS THE INITIAL FASTENER.

REPAIR FASTENER LOCATION. INSTALL A BACR15BB5D RIVET.

REPAIR FASTENER LOCATION. INSTALL A BACR15CE5D RIVET. [B]

INITIAL FASTENER LOCATION. IF THE INITIAL FASTENER IS A BACR15CE5D RIVET INSTALL A BACR15ET7D RIVET. IF THE INITIAL FASTENER IS A BACR15CE6D RIVET INSTALL A BACR15BB6D RIVET. [A] [S]

INITIAL FASTENER LOCATION. INSTALL THE SAME SIZE AND TYPE OF FASTENER AS THE INITIAL FASTENER. [C]

Fuselage General Skin Repair Between BS 178 and BS 259.5
Figure 49 (Sheet 4)

BOEING PROPRIETARY - Copyright © - Unpublished Work - See title page for details.

SKIN CUTOUT LOCATION	SKIN / LAP JOINT THICKNESSES	DETAIL NO
SKIN CUTOUT AWAY FROM A LAP OR A BUTT JOINT	MAXIMUM THICKNESS OF SKIN IN THE CUTOUT IS 0.056 INCH OR LESS	III
	MAXIMUM THICKNESS OF SKIN IN THE CUTOUT IS MORE THAN 0.056 INCH	IV
SKIN CUTOUT AT STA. 259.5 BUTT JOINT	MAXIMUM THICKNESS OF SKIN IN THE CUTOUT IS 0.056 INCH OR LESS	V
	MAXIMUM THICKNESS OF SKIN IN THE CUTOUT IS MORE THAN 0.056 INCH	VI
UPPER SKIN CUTOUT ABOVE A LAP JOINT	MAXIMUM THICKNESS OF SKIN IN THE CUTOUT IS 0.056 INCH OR LESS, AND THE THICKNESS OF UPPER SKIN ASSEMBLY AT THE LAP JOINT IS 0.071 OR LESS	VII
	MAXIMUM THICKNESS OF SKIN IN THE CUTOUT IS 0.056 INCH OR LESS, AND THE THICKNESS OF UPPER SKIN ASSEMBLY AT THE LAP JOINT IS MORE THAN 0.071 INCH	VIII
	MAXIMUM THICKNESS OF SKIN IN THE CUTOUT IS MORE THAN 0.056 INCH , AND THE THICKNESS OF UPPER SKIN ASSEMBLY AT THE LAP JOINT IS 0.071 INCH OR LESS	IX
	MAXIMUM THICKNESS OF SKIN IN THE CUTOUT IS MORE THAN 0.056 INCH, AND THE THICKNESS OF UPPER SKIN ASSEMBLY AT THE LAP JOINT IS MORE THAN 0.071	X
LOWER SKIN CUTOUT BELOW A LAP JOINT - MAXIMUM THICKNESS OF SKIN AND DOUBLER CUT IS LESS THAN 0.050 INCH	FOR AIRPLANES LINE NUMBERS 1 - 291	XI
	THE THICKNESS OF UPPER SKIN ASSEMBLY AT THE LAP JOINT IS 0.071 INCH OR LESS	XII
	THE THICKNESS OF UPPER SKIN ASSEMBLY AT THE LAP JOINT IS MORE THAN 0.071 INCH	XIII
UPPER SKIN CUTOUT AT A LAP JOINT	THE THICKNESS OF UPPER SKIN ASSEMBLY AT THE LAP JOINT IS LESS THAN 0.071 INCH	XIV
	THE THICKNESS OF UPPER SKIN ASSEMBLY AT THE LAP JOINT IS 0.071 INCH	XV
	THE THICKNESS OF UPPER SKIN ASSEMBLY AT THE LAP JOINT IS MORE THAN 0.071 INCH	XVI
LOWER AND UPPER SKIN CUTOUT AT A LAP JOINT	THE THICKNESS OF UPPER SKIN ASSEMBLY AT THE LAP JOINT IS LESS THAN 0.071 INCH	XVII
	THE THICKNESS OF UPPER SKIN ASSEMBLY AT THE LAP JOINT IS 0.071 INCH	XVIII
	THE THICKNESS OF UPPER SKIN ASSEMBLY AT THE LAP JOINT IS MORE THAN 0.071 INCH	XIX

TYPICAL DAMAGE LOCATIONS
TABLE I

Fuselage General Skin Repair Between BS 178 and BS 259.5
Figure 49 (Sheet 5)

W39933

BOEING PROPRIETARY - Copyright © - Unpublished Work - See title page for details.

ITEM	PART	QUANTITY	MATERIAL
1	DOUBLER	1	0.063 INCH THICK, CLAD 2024-T3
2	DOUBLER	1	0.032 INCH THICK, CLAD 2024-T3
3	TRIPLER	1	0.050 INCH THICK, CLAD 2024-T3
4	FILLER	AS NECESSARY	CLAD 2024-T3
5	DOUBLER	1	SEE TABLE III, CLAD 2024-T3
6	STRUCTURAL FILLER	AS NECESSARY	SEE TABLE III, CLAD 2024-T3
7	STRUCTURAL FILLER	AS NECESSARY	0.032 INCH THICK, CLAD 2024-T3
8	STRUCTURAL FILLER	AS NECESSARY	0.050 INCH THICK, CLAD 2024-T3
9	FILLER	AS NECESSARY	CLAD 2024-T3
10	TRIPLER	1	0.063 INCH THICK, CLAD 2024-T3
11	DOUBLER	1	0.040 INCH THICK, CLAD 2024-T3
12	DOUBLER	1	SEE TABLE III, CLAD 2024-T3
13	DOUBLER	1	0.032 INCH THICK, CLAD 2024-T3
14	TRIPLER	1	0.050 INCH THICK, CLAD 2024-T3
15	SECOND TRIPLER	1	0.063 INCH THICK, CLAD 2024-T3

REPAIR MATERIAL
TABLE II

THICKNESS OF UPPER SKIN ASSEMBLY AT THE LAP JOINT (INCH)	THICKNESS OF PARTS (INCH)		
	5 (DOUBLER)	6 (STRUCTURAL FILLER)	12 (DOUBLER)
0.040 THICK SKIN; NO BONDED LAP DOUBLER	0.063	0.040	-
0.040 THICK SKIN PLUS 0.016 OR 0.020 THICK BONDED LAP DOUBLER	0.063	0.063	0.063
0.050 THICK SKIN PLUS 0.016 THICK BONDED LAP DOUBLER	0.071	0.063	0.063
0.071 THICK CHEM-MILLED SKIN		0.071	0.071

TABLE III

Fuselage General Skin Repair Between BS 178 and BS 259.5
Figure 49 (Sheet 6)

BOEING PROPRIETARY - Copyright © - Unpublished Work - See title page for details.

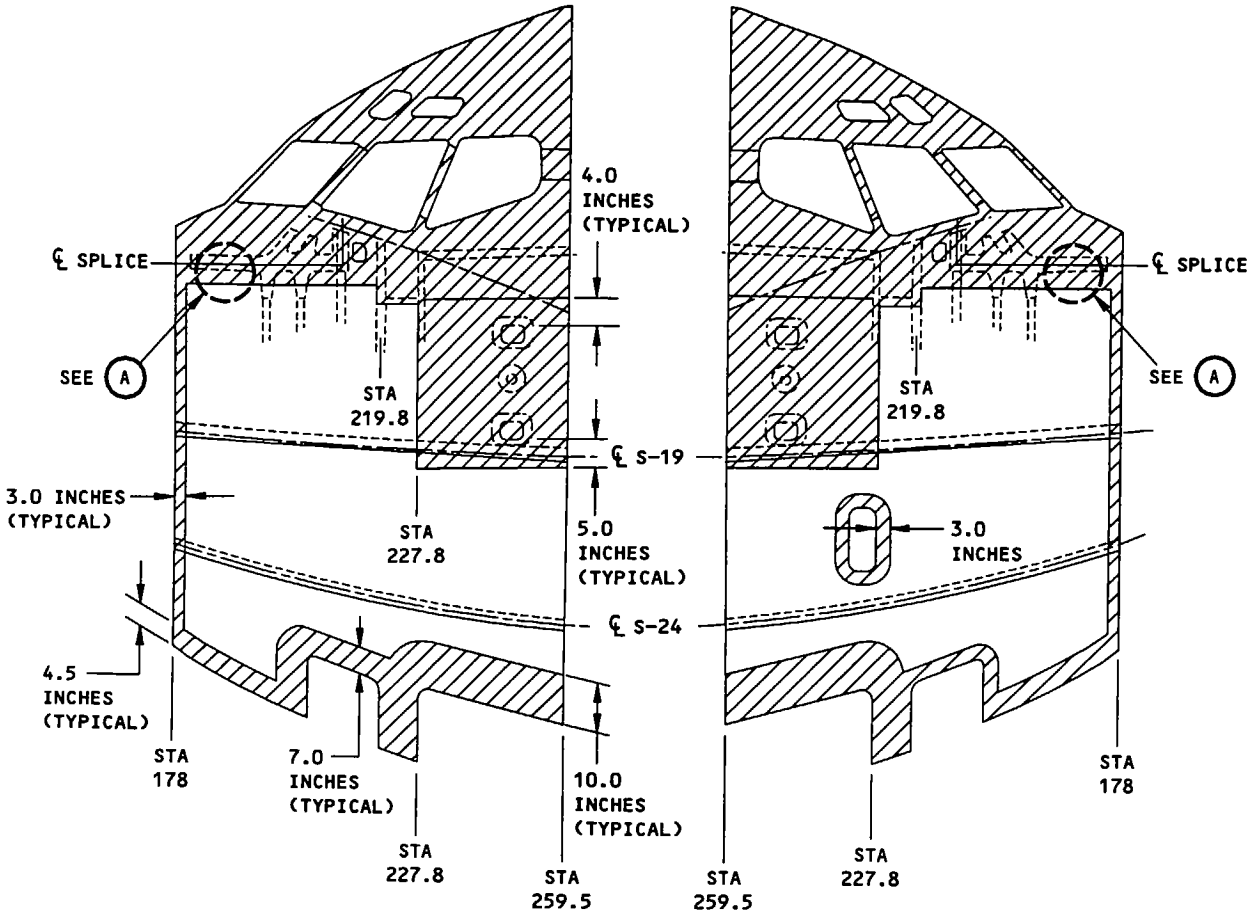

REPAIR RESTRICTION AREAS
DETAIL I

DO NOT USE THIS REPAIR AT SHADED AREAS.

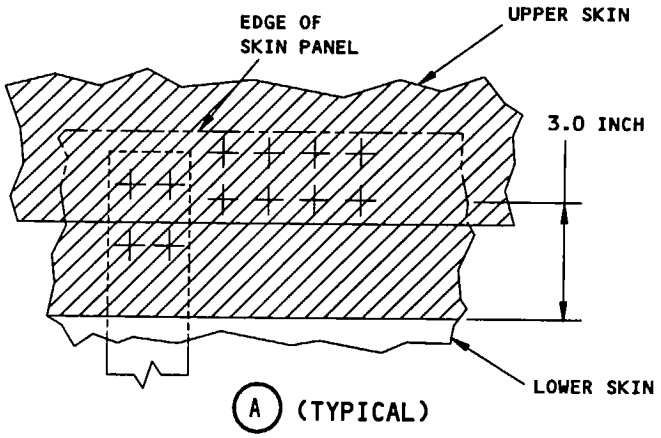

Fuselage General Skin Repair Between BS 178 and BS 259.5
Figure 49 (Sheet 7)

BOEING PROPRIETARY - Copyright © - Unpublished Work - See title page for details.

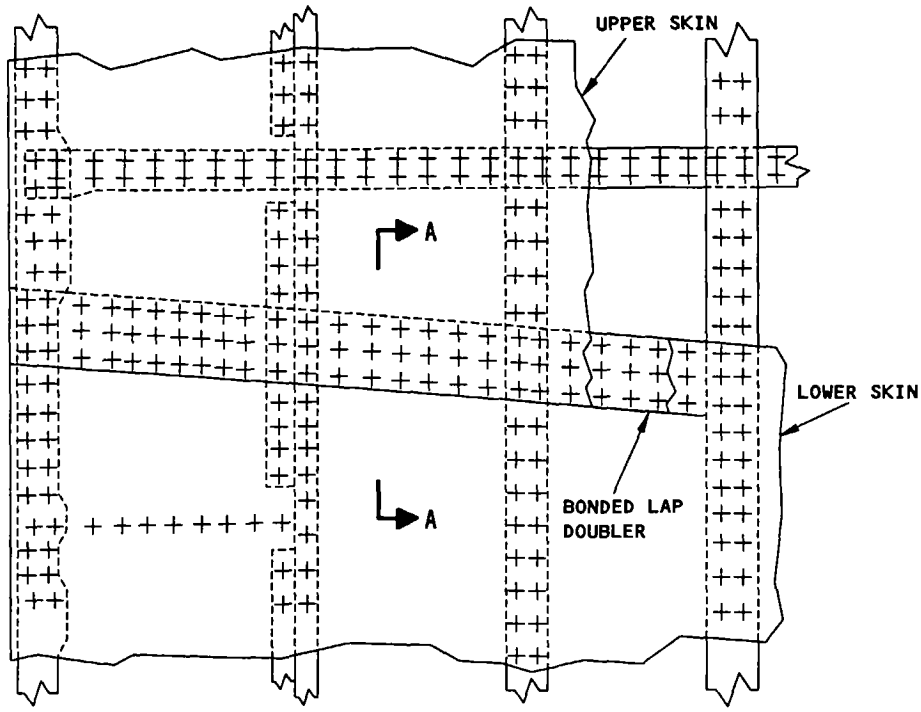

UPPER SKIN ASSEMBLY AT LAP JOINT
DETAIL II

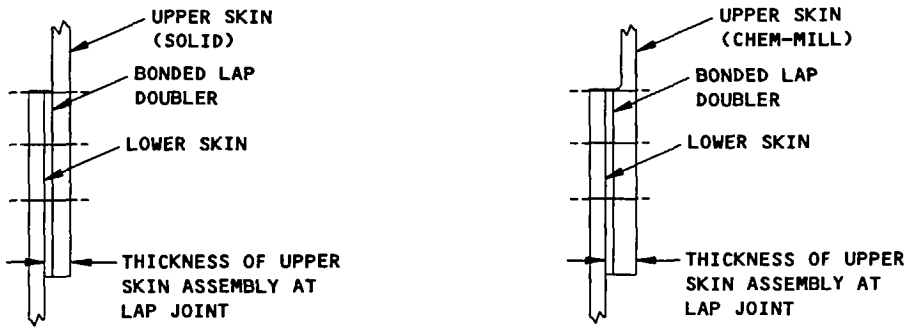

SOLID SKIN CHEM-MILL SKIN

SECTION A-A

UPPER SKIN ASSEMBLY AT A LAP JOINT	TOTAL THICKNESS
0.040 INCH THICK SOLID UPPER SKIN WITH NO BONDED LAP DOUBLER	0.040
0.040 INCH THICK SOLID UPPER SKIN WITH 0.016 INCH THICK BONDED LAP DOUBLER	0.056
0.040 INCH THICK SOLID UPPER SKIN WITH 0.020 INCH THICK BONDED LAP DOUBLER	0.060
0.050 INCH THICK SOLID UPPER SKIN WITH 0.016 INCH THICK BONDED LAP DOUBLER	0.066
0.063 INCH THICK SOLID UPPER SKIN WITH 0.016 INCH THICK BONDED LAP DOUBLER	0.079
0.063 INCH THICK CHEM-MILLED UPPER SKIN WITH 0.016 INCH THICK BONDED LAP DOUBLER	0.079
0.071 INCH THICK CHEM-MILLED UPPER SKIN WITH NO BONDED LAP DOUBLER	0.071

TABLE IV

Fuselage General Skin Repair Between BS 178 and BS 259.5
Figure 49 (Sheet 8)

BOEING PROPRIETARY - Copyright © - Unpublished Work - See title page for details.

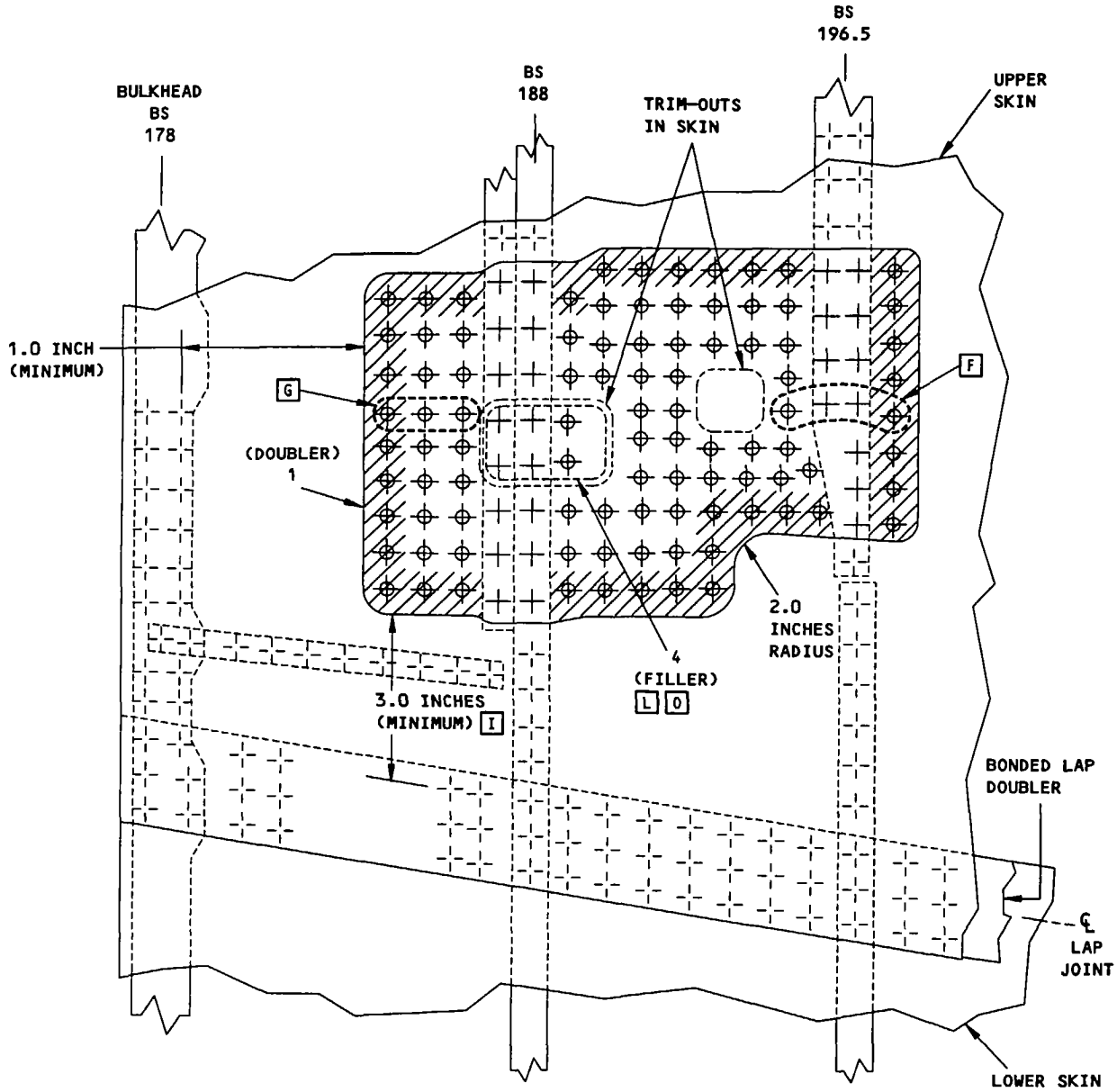

CRITICAL FASTENER ROW

SUBSEQUENT INSPECTIONS ARE NECESSARY FOR CATEGORY B REPAIRS. REFER TO TABLE V FOR INSPECTION REQUIREMENTS.

SKIN CUTOUT AWAY FROM A LAP OR A BUTT JOINT
- THE MAXIMUM SKIN THICKNESS IN THE CUTOUT IS 0.056 INCH OR LESS
DETAIL III

Fuselage General Skin Repair Between BS 178 and BS 259.5
Figure 49 (Sheet 9)

BOEING PROPRIETARY - Copyright © - Unpublished Work - See title page for details.

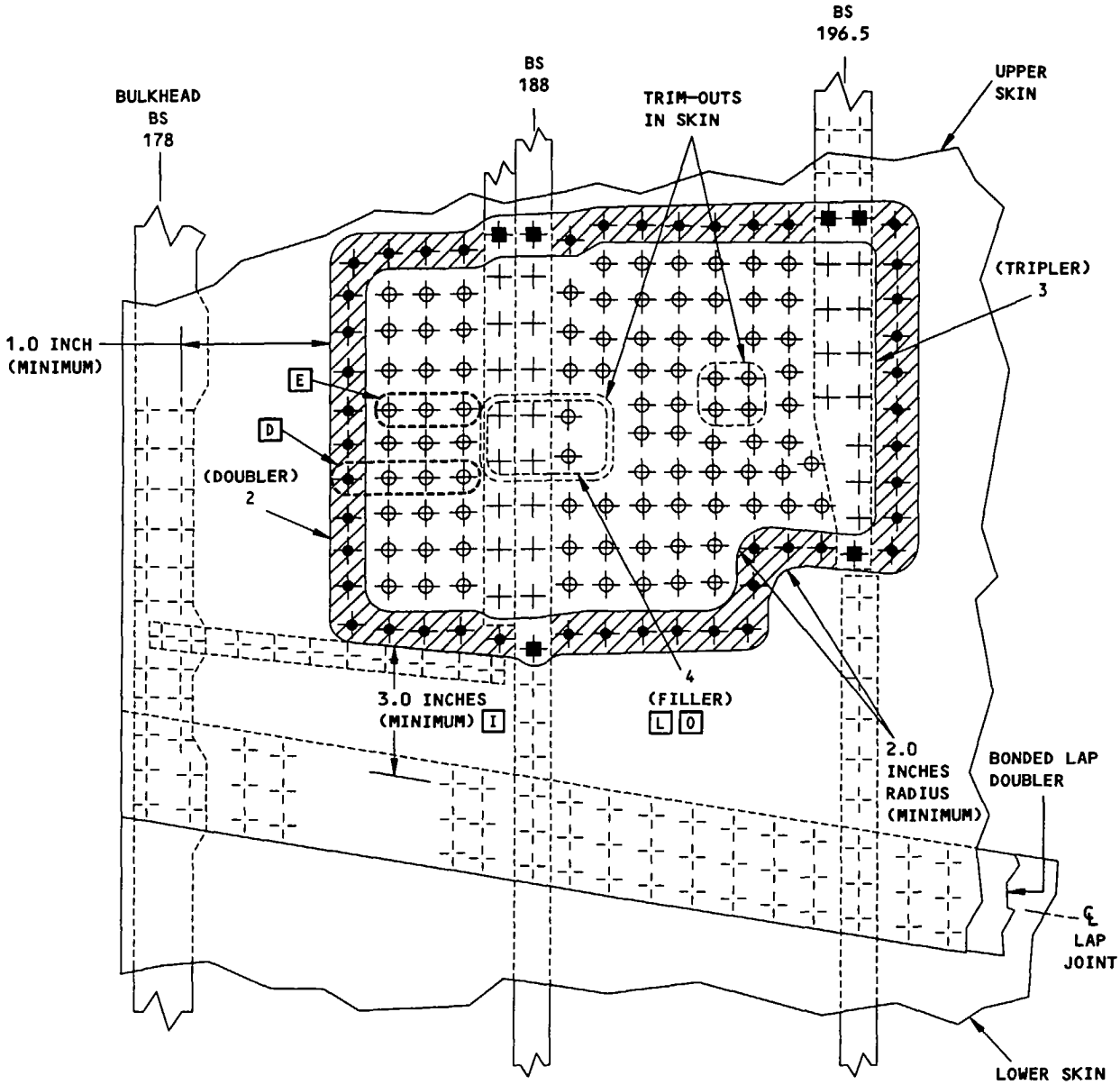

CRITICAL FASTENER ROW

SUBSEQUENT INSPECTIONS ARE NECESSARY FOR CATEGORY B REPAIRS. REFER TO TABLE V FOR INSPECTION REQUIREMENTS.

SKIN CUTOUT AWAY FROM A LAP OR A BUTT JOINT
- THE MAXIMUM SKIN THICKNESS IN THE CUTOUT IS MORE THAN 0.056 INCH
DETAIL IV

Fuselage General Skin Repair Between BS 178 and BS 259.5
Figure 49 (Sheet 10)

BOEING PROPRIETARY - Copyright © - Unpublished Work - See title page for details.

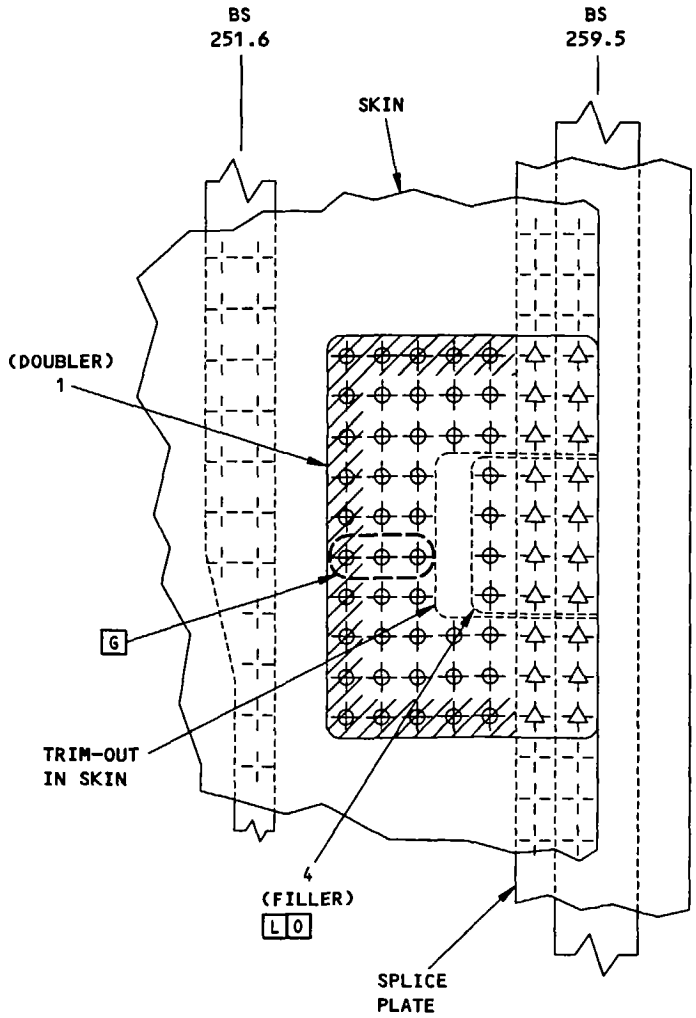

CRITICAL FASTENER ROW

SUBSEQUENT INSPECTIONS ARE NECESSARY FOR CATEGORY B REPAIRS. REFER TO TABLE V FOR INSPECTION REQUIREMENTS.

SKIN CUTOUT AT STA 259.5 BUTT JOINT
- THE MAXIMUM SKIN THICKNESS IN THE CUTOUT IS 0.056 INCH OR LESS
DETAIL V

Fuselage General Skin Repair Between BS 178 and BS 259.5
Figure 49 (Sheet 11)

BOEING PROPRIETARY - Copyright © - Unpublished Work - See title page for details.

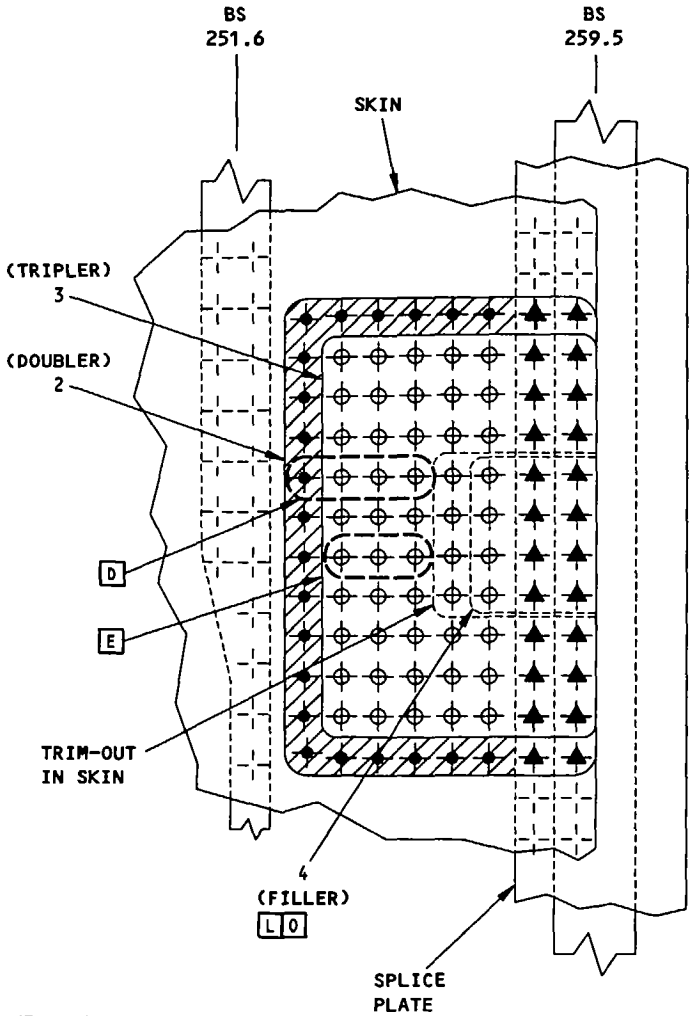

CRITICAL FASTENER ROW

SUBSEQUENT INSPECTIONS ARE NECESSARY FOR CATEGORY B REPAIRS. REFER TO TABLE V FOR INSPECTION REQUIREMENTS.

SKIN CUTOUT AT STA 259.5 BUTT JOINT
- THE MAXIMUM SKIN THICKNESS IN THE CUTOUT IS MORE THAN 0.056 INCH
DETAIL VI

Fuselage General Skin Repair Between BS 178 and BS 259.5
Figure 49 (Sheet 12)

BOEING PROPRIETARY - Copyright © - Unpublished Work - See title page for details.

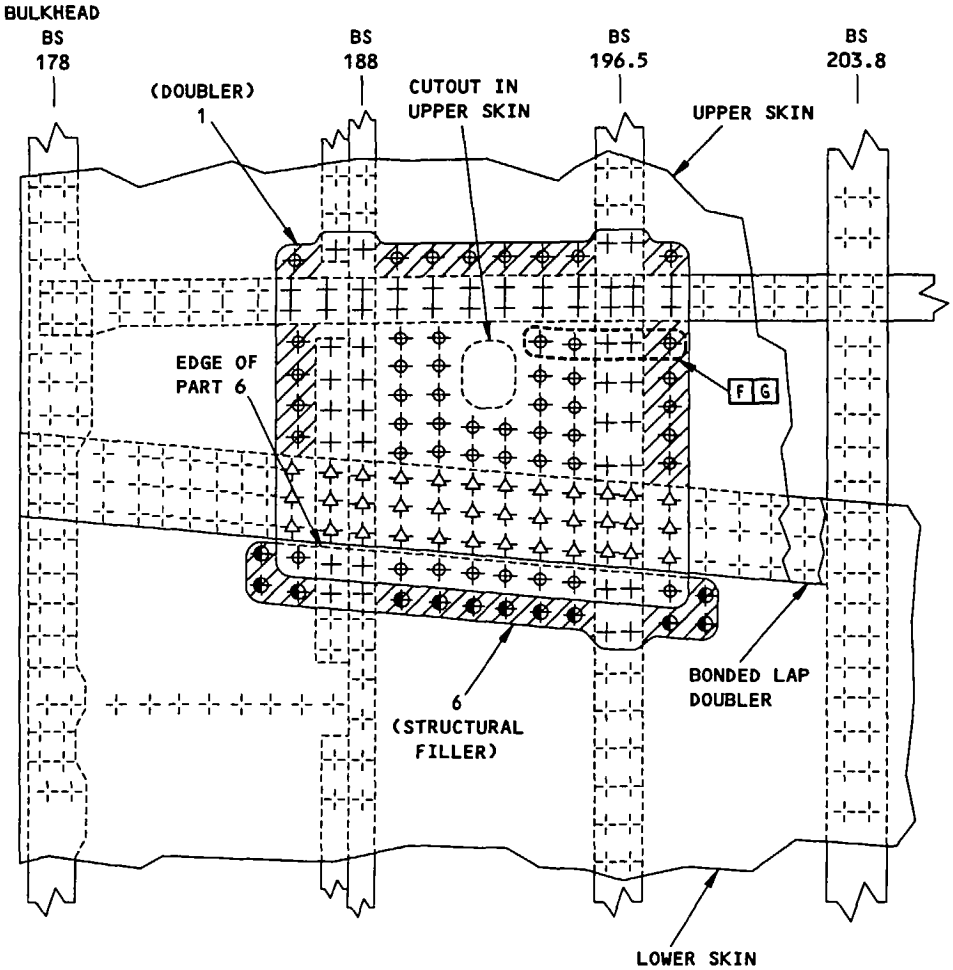

CRITICAL FASTENER ROW

SUBSEQUENT INSPECTIONS ARE NECESSARY FOR CATEGORY B REPAIRS. REFER TO TABLE V FOR INSPECTION REQUIREMENTS.

UPPER SKIN CUTOUT ABOVE A LAP JOINT
- THE MAXIMUM SKIN THICKNESS IN THE CUTOUT IS 0.056 INCH OR LESS, AND THE THICKNESS OF THE UPPER SKIN ASSEMBLY AT THE LAP JOINT IS 0.071 INCH OR LESS
DETAIL VII

Fuselage General Skin Repair Between BS 178 and BS 259.5
Figure 49 (Sheet 13)

BOEING PROPRIETARY - Copyright © - Unpublished Work - See title page for details.

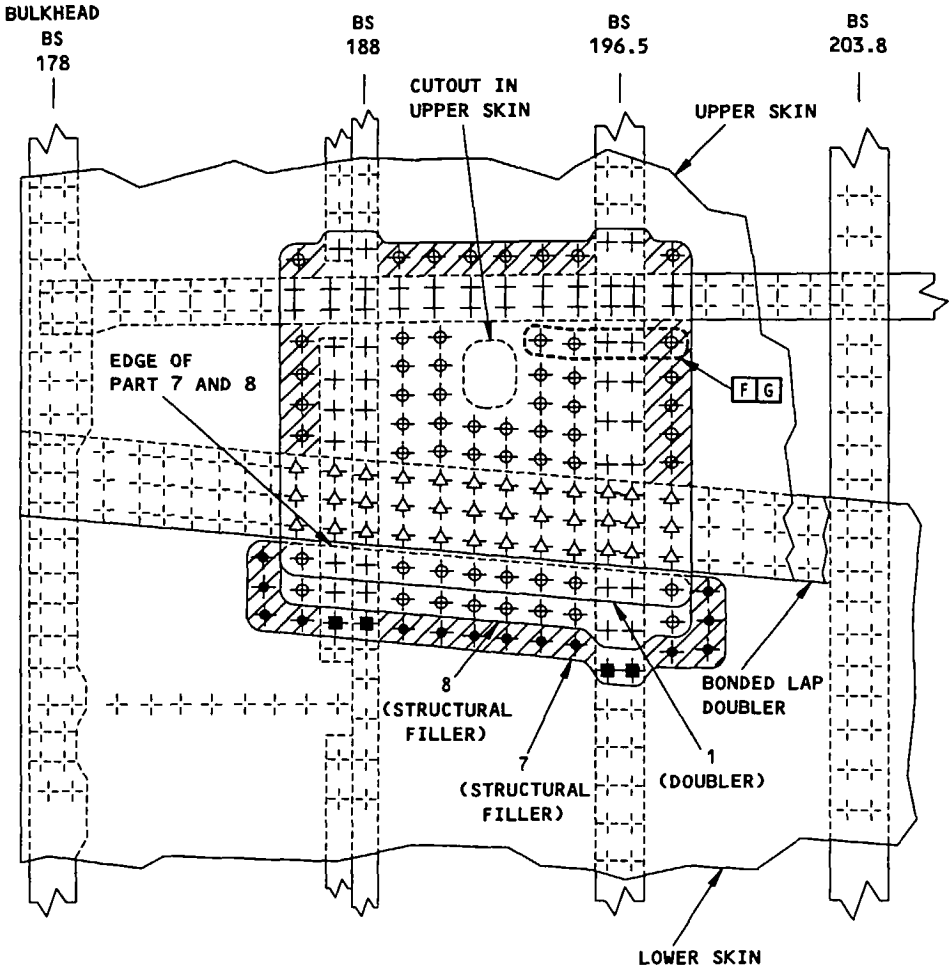

CRITICAL FASTENER ROW

SUBSEQUENT INSPECTIONS ARE NECESSARY FOR CATEGORY B REPAIRS. REFER TO TABLE V FOR INSPECTION REQUIREMENTS.

UPPER SKIN CUTOUT ABOVE A LAP JOINT
- THE MAXIMUM SKIN THICKNESS IN THE CUTOUT IS 0.056 INCH OR LESS, AND THE THICKNESS OF THE UPPER SKIN ASSEMBLY AT THE LAP JOINT IS MORE THAN 0.071 INCH
DETAIL VIII

Fuselage General Skin Repair Between BS 178 and BS 259.5
Figure 49 (Sheet 14)

BOEING PROPRIETARY - Copyright © - Unpublished Work - See title page for details.

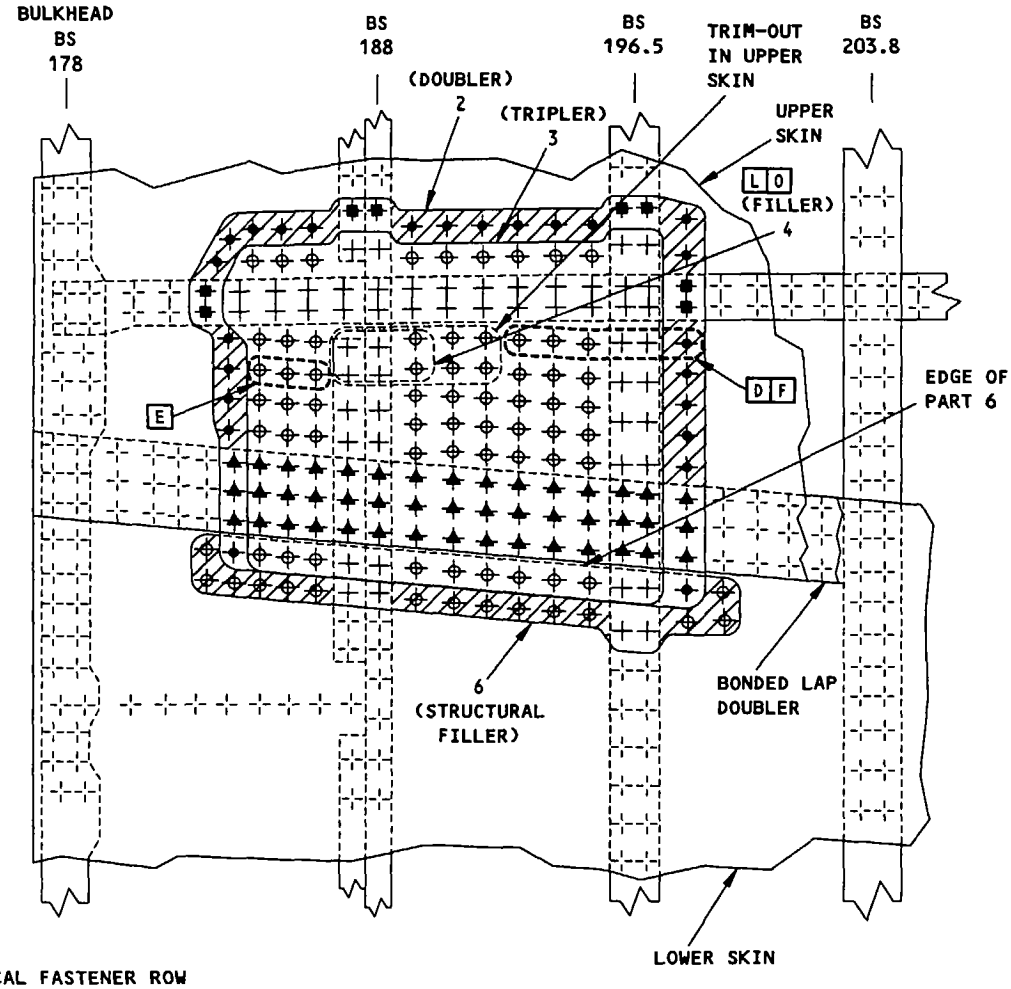

CRITICAL FASTENER ROW

SUBSEQUENT INSPECTIONS ARE NECESSARY FOR CATEGORY B REPAIRS. REFER TO TABLE V FOR INSPECTION REQUIREMENTS.

UPPER SKIN CUTOUT ABOVE A LAP JOINT
- THE MAXIMUM SKIN THICKNESS IN THE CUTOUT IS MORE THAN 0.056 INCH, AND THE THICKNESS OF THE UPPER SKIN ASSEMBLY AT THE LAP JOINT IS 0.071 INCH OR LESS
DETAIL IX

Fuselage General Skin Repair Between BS 178 and BS 259.5
Figure 49 (Sheet 15)

BOEING PROPRIETARY - Copyright © - Unpublished Work - See title page for details.

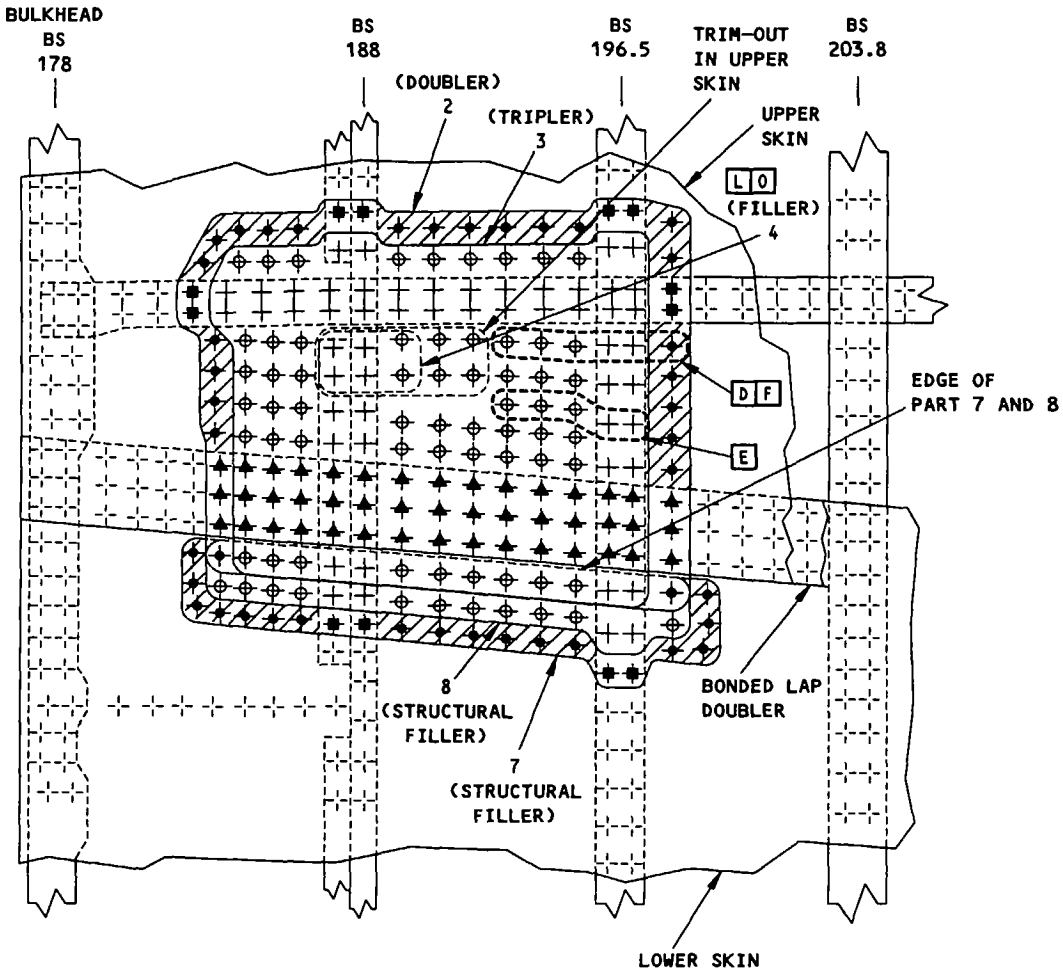

CRITICAL FASTENER ROW

SUBSEQUENT INSPECTIONS ARE NECESSARY FOR CATEGORY B REPAIRS. REFER TO TABLE V FOR INSPECTION REQUIREMENTS.

UPPER SKIN CUTOUT ABOVE A LAP JOINT
- THE MAXIMUM SKIN THICKNESS IN THE CUTOUT IS MORE THAN 0.056 INCH, AND THE THICKNESS OF THE UPPER SKIN ASSEMBLY AT THE LAP JOINT IS MORE THAN 0.071 INCH
DETAIL X

Fuselage General Skin Repair Between BS 178 and BS 259.5
Figure 49 (Sheet 16)

BOEING PROPRIETARY - Copyright © - Unpublished Work - See title page for details.

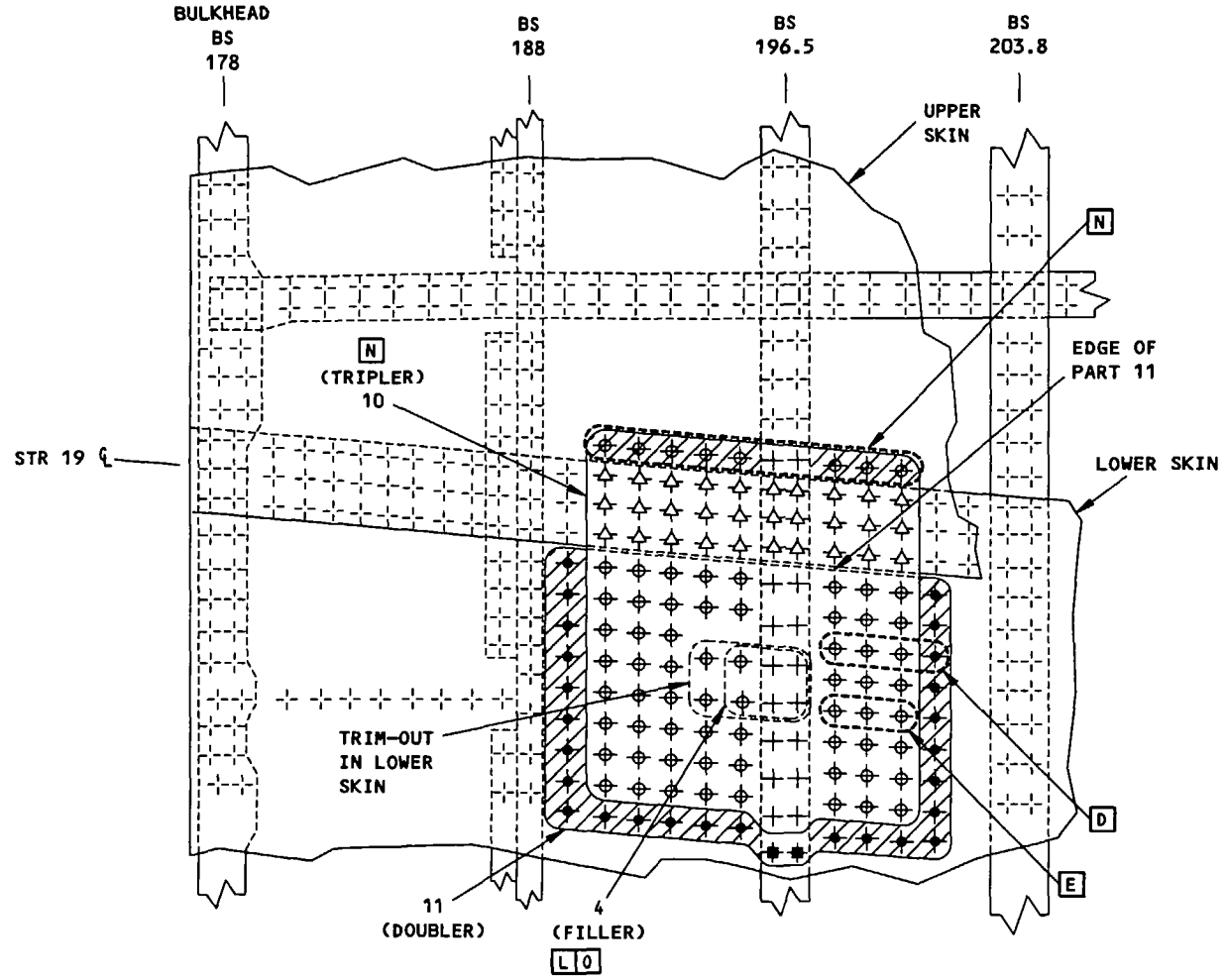

CRITICAL FASTENER ROW

SUBSEQUENT INSPECTIONS ARE NECESSARY FOR CATEGORY B REPAIRS. REFER TO TABLE V FOR INSPECTION REQUIREMENTS.

LOWER SKIN CUTOUT BELOW A LAP JOINT -
AIRPLANES LINE NUMBERS 1 THRU 291
DETAIL XI

Fuselage General Skin Repair Between BS 178 and BS 259.5
Figure 49 (Sheet 17)

BOEING PROPRIETARY - Copyright © - Unpublished Work - See title page for details.

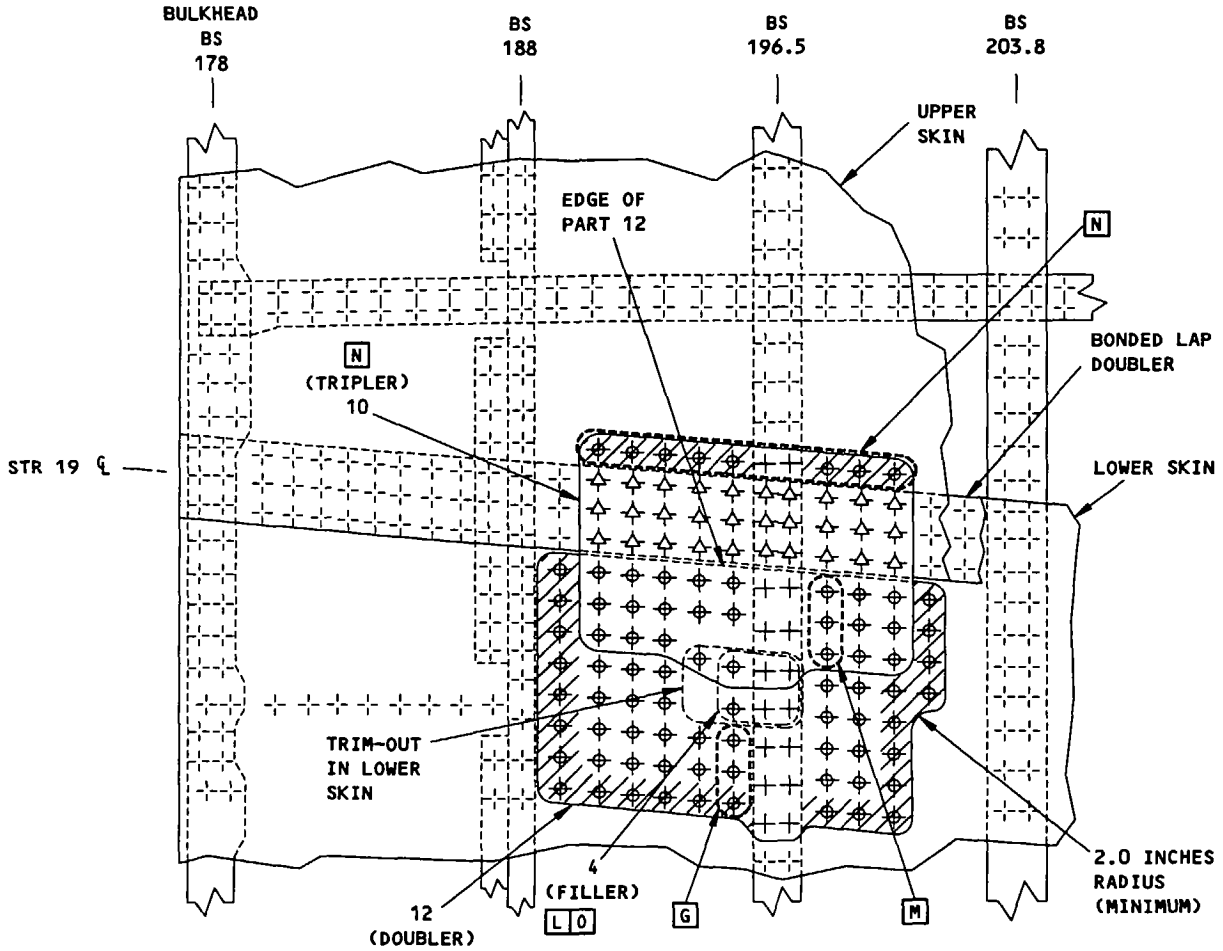

CRITICAL FASTENER ROW

SUBSEQUENT INSPECTIONS ARE NECESSARY FOR CATEGORY B REPAIRS. REFER TO TABLE V FOR INSPECTION REQUIREMENTS.

LOWER SKIN CUTOUT BELOW A LAP JOINT
- THE THICKNESS OF THE UPPER SKIN ASSEMBLY AT THE LAP JOINT IS 0.071 INCH OR LESS
DETAIL XII

Fuselage General Skin Repair Between BS 178 and BS 259.5
Figure 49 (Sheet 18)

BOEING PROPRIETARY - Copyright © - Unpublished Work - See title page for details.

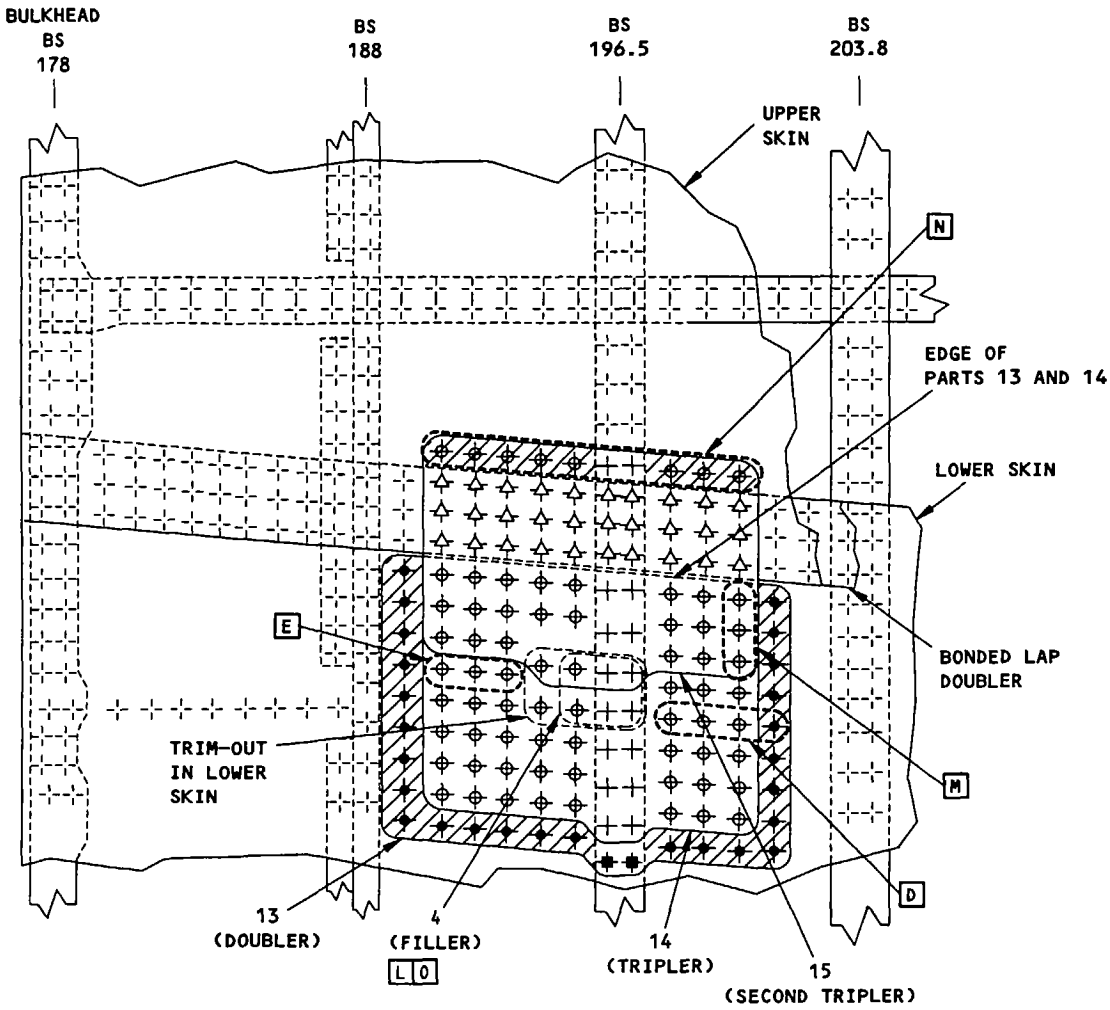

CRITICAL FASTENER ROW

SUBSEQUENT INSPECTIONS ARE NECESSARY FOR CATEGORY B REPAIRS. REFER TO TABLE V FOR INSPECTION REQUIREMENTS.

LOWER SKIN CUTOUT BELOW A LAP JOINT
- THE THICKNESS OF THE UPPER SKIN ASSEMBLY AT THE LAP JOINT IS MORE THAN 0.071 INCH
DETAIL XIII

Fuselage General Skin Repair Between BS 178 and BS 259.5
Figure 49 (Sheet 19)

BOEING PROPRIETARY - Copyright © - Unpublished Work - See title page for details.

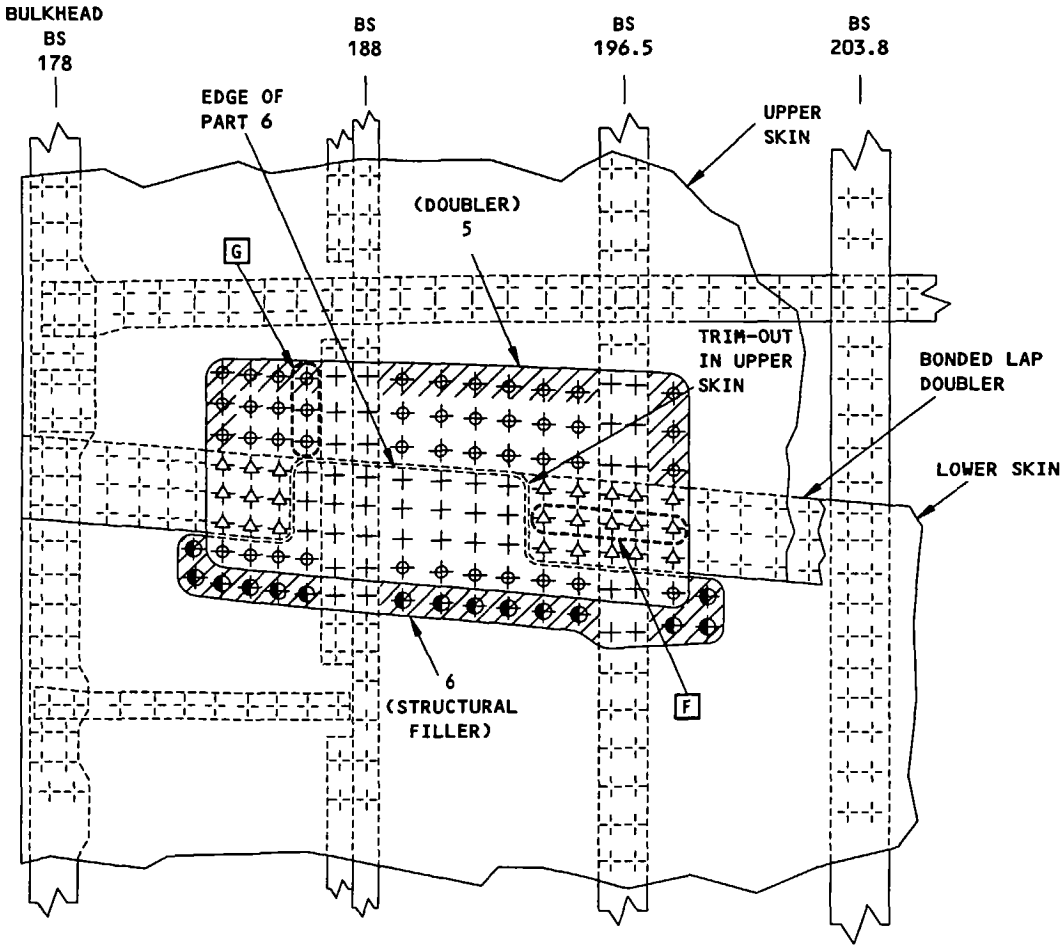

CRITICAL FASTENER ROW

SUBSEQUENT INSPECTIONS ARE NECESSARY FOR CATEGORY B REPAIRS. REFER TO TABLE V FOR INSPECTION REQUIREMENTS.

UPPER SKIN CUTOUT AT A LAP JOINT
- THE THICKNESS OF THE UPPER SKIN ASSEMBLY AT THE LAP JOINT IS LESS THAN 0.071 INCH
DETAIL XIV

Fuselage General Skin Repair Between BS 178 and BS 259.5
Figure 49 (Sheet 20)

BOEING PROPRIETARY - Copyright © - Unpublished Work - See title page for details.

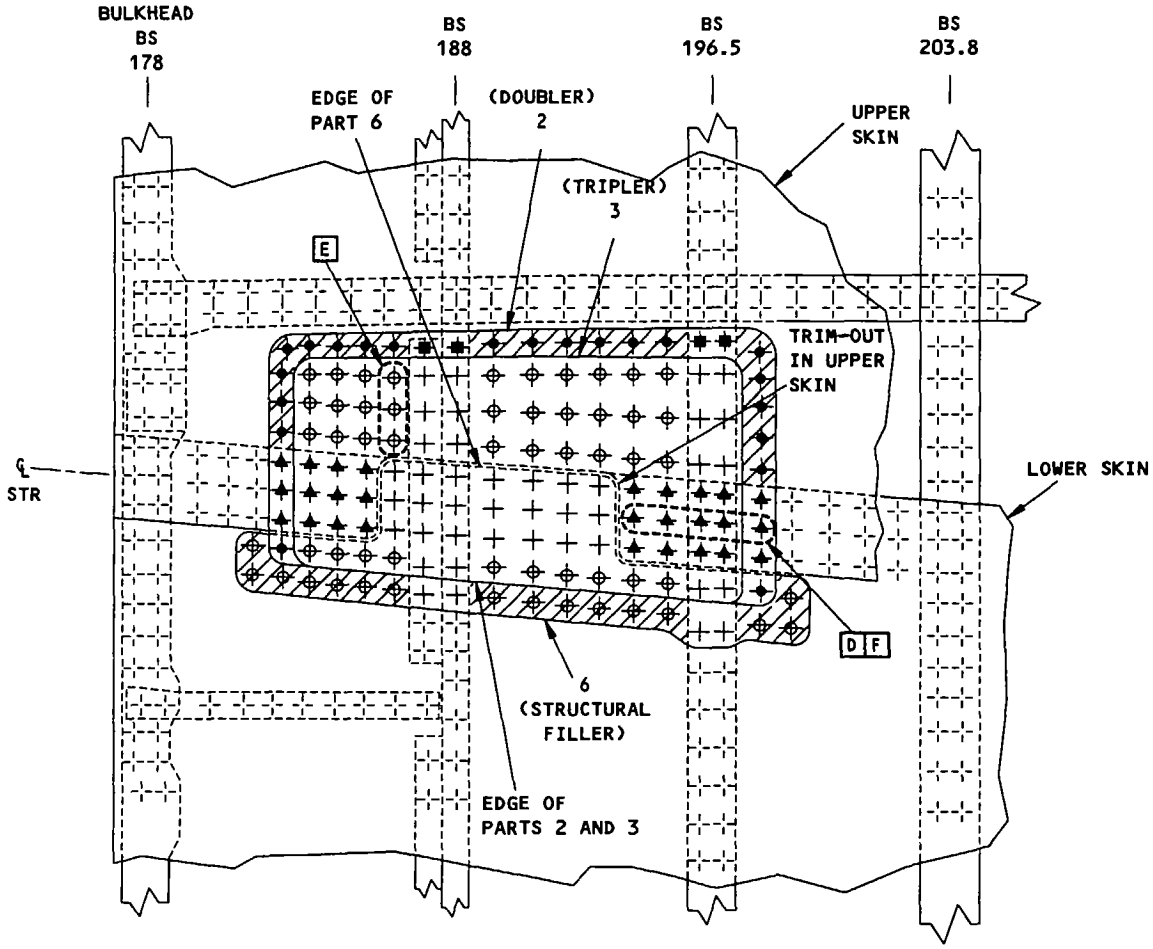

CRITICAL FASTENER ROW

SUBSEQUENT INSPECTIONS ARE NECESSARY FOR CATEGORY B REPAIRS. REFER TO TABLE V FOR INSPECTION REQUIREMENTS.

UPPER SKIN CUTOUT AT A LAP JOINT
- THE THICKNESS OF THE UPPER SKIN ASSEMBLY AT THE LAP JOINT IS 0.071 INCH
DETAIL XV

Fuselage General Skin Repair Between BS 178 and BS 259.5
Figure 49 (Sheet 21)

BOEING PROPRIETARY - Copyright © - Unpublished Work - See title page for details.

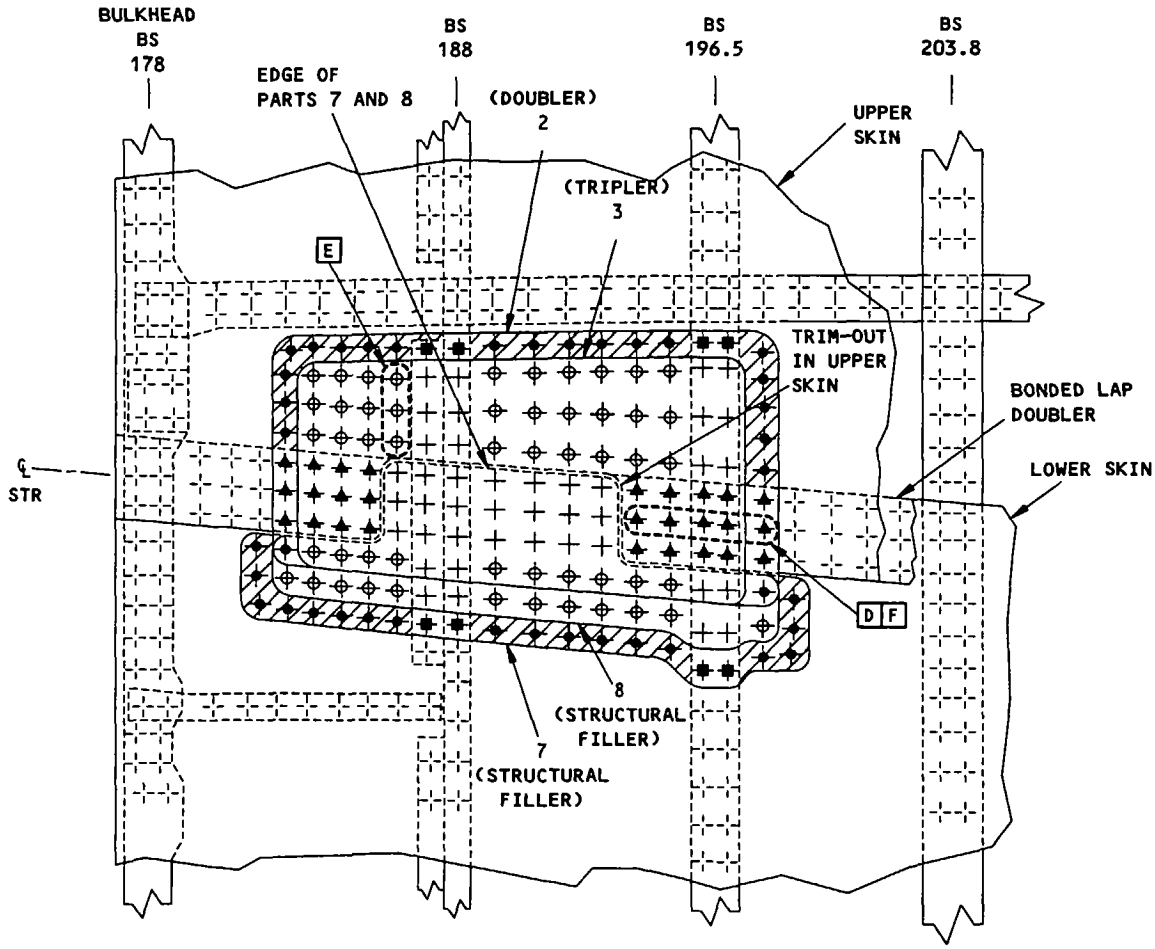

CRITICAL FASTENER ROW

SUBSEQUENT INSPECTIONS ARE NECESSARY FOR CATEGORY B REPAIRS. REFER TO TABLE V FOR INSPECTION REQUIREMENTS.

UPPER SKIN CUTOUT AT A LAP JOINT
- THE THICKNESS OF THE UPPER SKIN ASSEMBLY AT THE LAP JOINT IS MORE THAN 0.071 INCH
DETAIL XVI

Fuselage General Skin Repair Between BS 178 and BS 259.5
Figure 49 (Sheet 22)

BOEING PROPRIETARY - Copyright © - Unpublished Work - See title page for details.

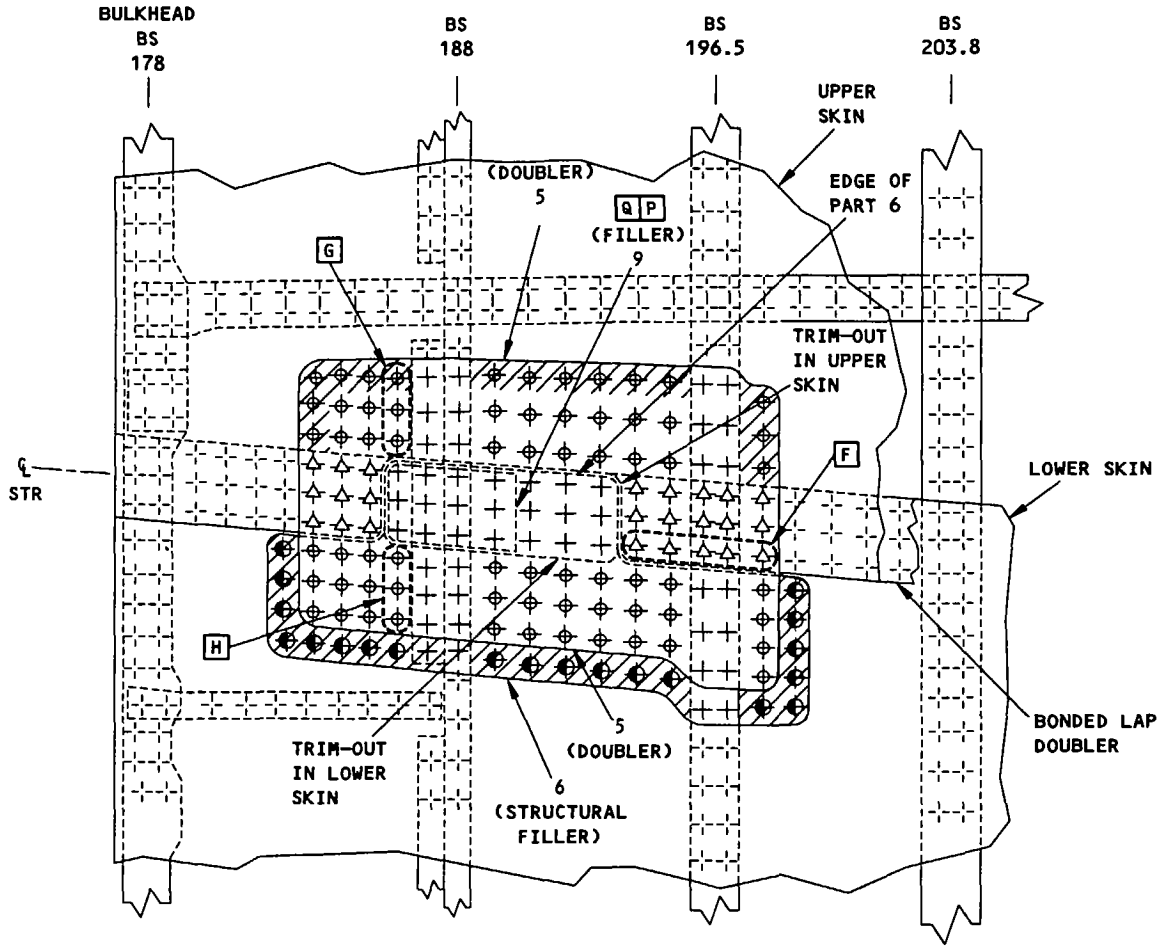

CRITICAL FASTENER ROW

SUBSEQUENT INSPECTIONS ARE NECESSARY FOR CATEGORY B REPAIRS. REFER TO TABLE V FOR INSPECTION REQUIREMENTS.

UPPER AND LOWER SKIN CUTOUT AT A LAP JOINT
- THE THICKNESS OF THE UPPER SKIN ASSEMBLY AT THE LAP JOINT IS LESS THAN 0.071 INCH
DETAIL XVII

Fuselage General Skin Repair Between BS 178 and BS 259.5
Figure 49 (Sheet 23)

BOEING PROPRIETARY - Copyright © - Unpublished Work - See title page for details.

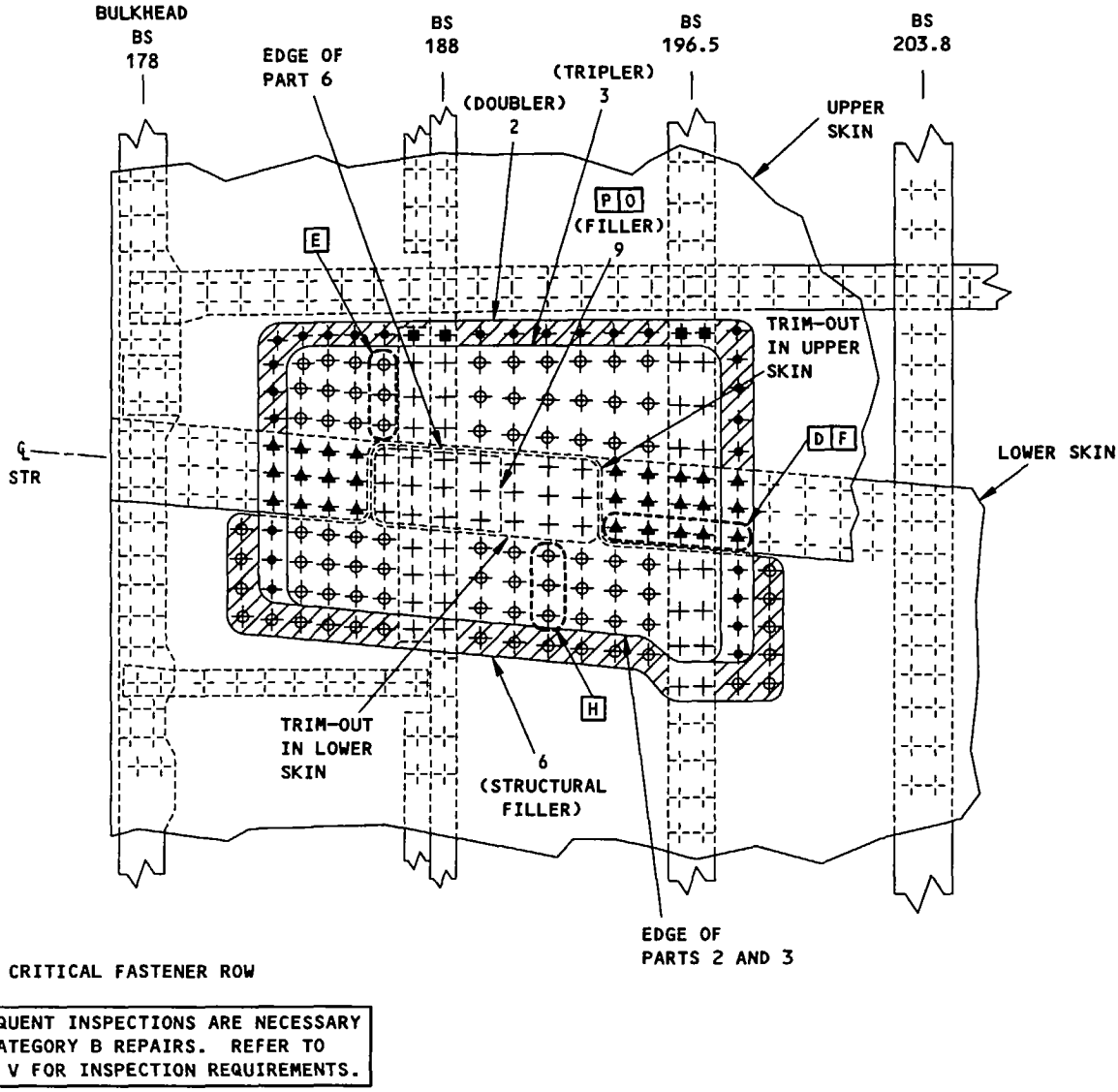

SUBSEQUENT INSPECTIONS ARE NECESSARY FOR CATEGORY B REPAIRS. REFER TO TABLE V FOR INSPECTION REQUIREMENTS.

UPPER AND LOWER SKIN CUTOUT AT A LAP JOINT
- THE THICKNESS OF THE UPPER SKIN AT THE LAP JOINT IS 0.071 INCH
DETAIL XVIII

Fuselage General Skin Repair Between BS 178 and BS 259.5
Figure 49 (Sheet 24)

BOEING PROPRIETARY - Copyright © - Unpublished Work - See title page for details.

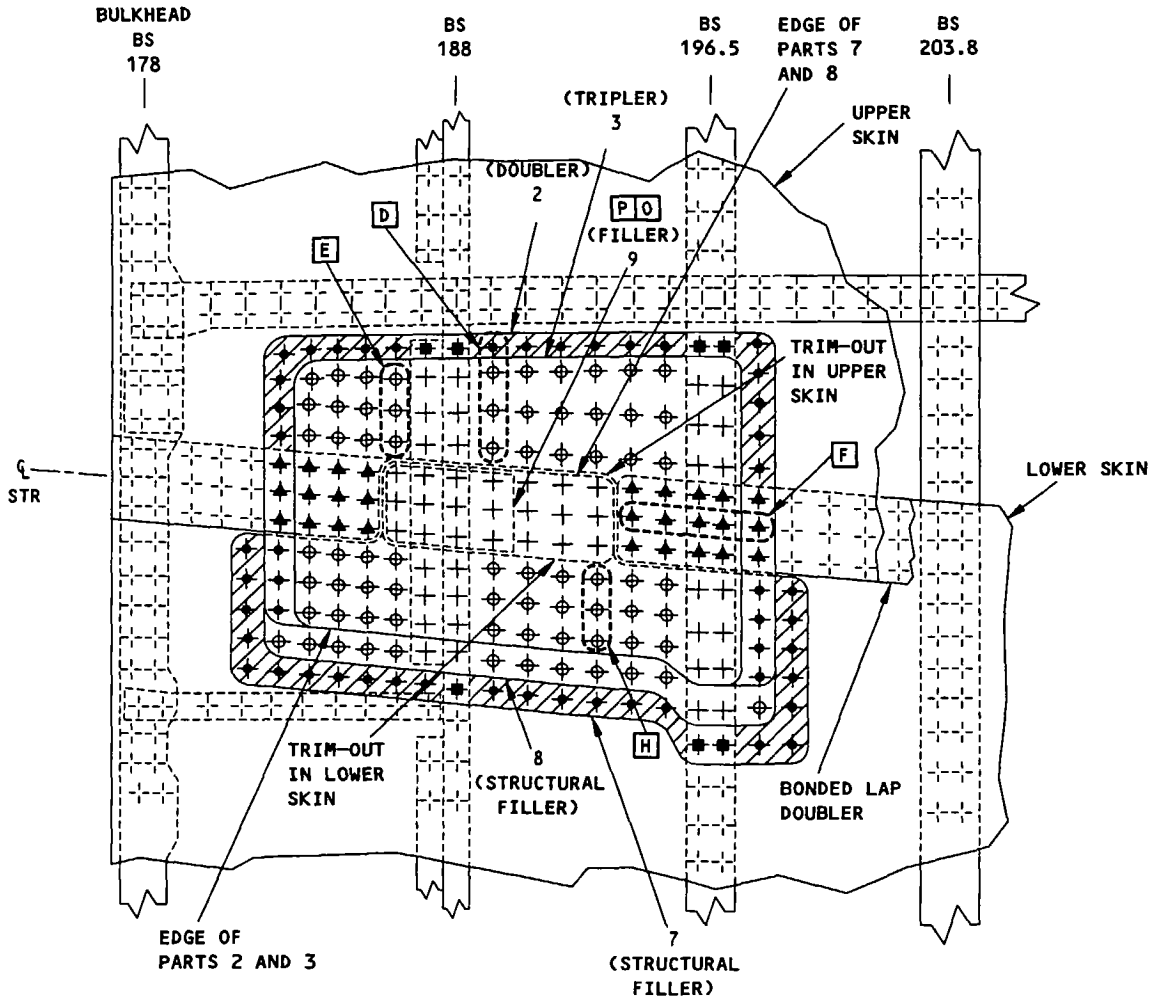

CRITICAL FASTENER ROW

SUBSEQUENT INSPECTIONS ARE NECESSARY FOR CATEGORY B REPAIRS. REFER TO TABLE V FOR INSPECTION REQUIREMENTS.

UPPER AND LOWER SKIN CUTOUT AT A LAP JOINT
- THE THICKNESS OF THE UPPER SKIN AT THE LAP JOINT IS MORE THAN 0.071 INCH
DETAIL XIX

Fuselage General Skin Repair Between BS 178 and BS 259.5
Figure 49 (Sheet 25)

BOEING PROPRIETARY - Copyright © - Unpublished Work - See title page for details.

CATEGORY B REPAIR INSPECTION REQUIREMENTS		
INSPECTION THRESHOLD	REPEAT INSPECTION ALTERNATIVES	
	METHOD	INTERVAL
U	T	T
Note: INSPECT SKIN AROUND THE FIRST ROW OF FASTENERS ALONG THE EDGE OF THE REPAIR DOUBLER AND STRUCTURAL FILLER IF INSTALLED AS SHOWN IN DETAILS XX, XXI OR XXII AS APPLICABLE.		

TABLE V

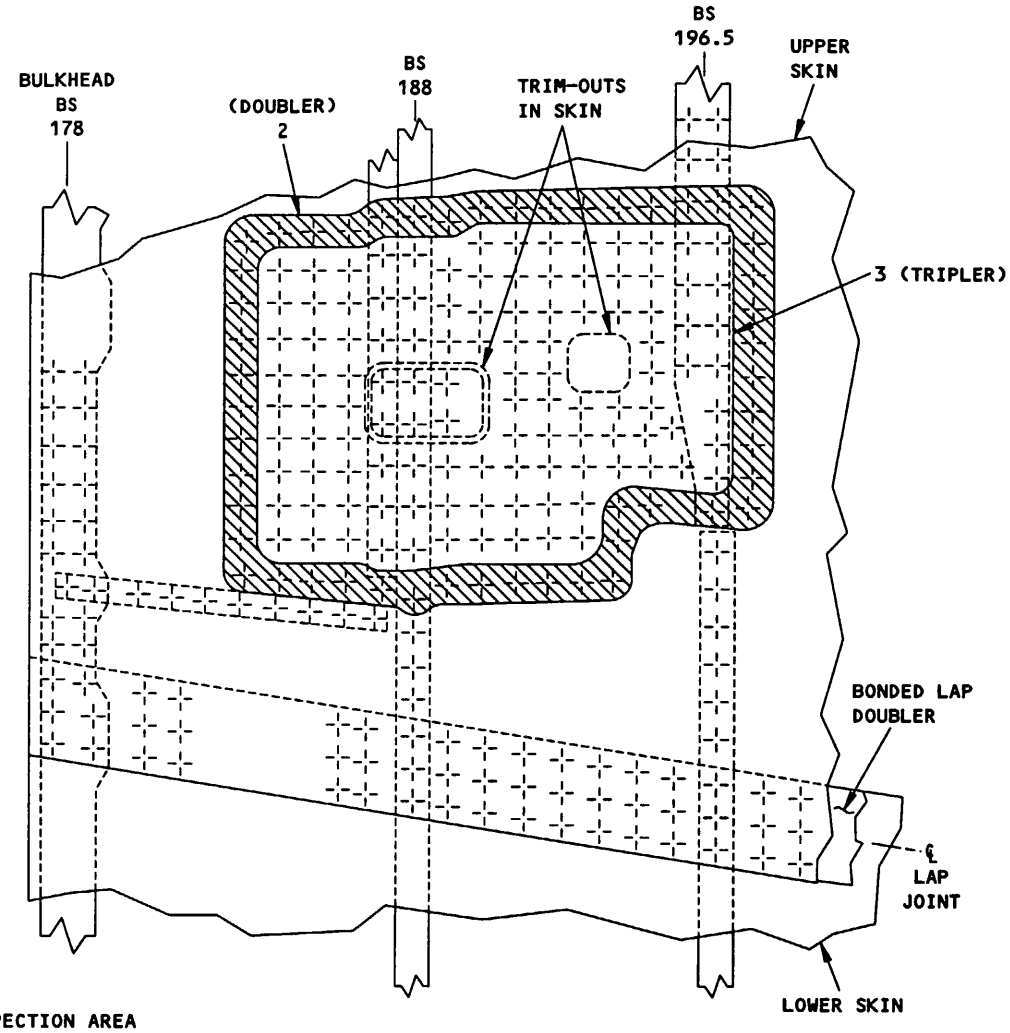

SKIN INSPECTION AREA

- FOR MEDIUM FREQUENCY EDDY CURRENT (MFEC) OR DETAILED VISUAL METHOD, INSPECT THE SKIN INTERNALLY ALONG THE OUTER FASTENER ROWS EXCEPT FOR THE SKIN UNDER THE INTERNAL STRUCTURE
- FOR LFEC METHOD, INSPECT THE SKIN EXTERNALLY THROUGH THE REPAIR DOUBLER ALONG THE ENTIRE OUTER FASTENER ROWS.

INSPECTION AREA FOR DETAIL IV IS SHOWN, ALMOST THE SAME FOR DETAIL III
DETAIL XX

Fuselage General Skin Repair Between BS 178 and BS 259.5
Figure 49 (Sheet 26)

BOEING PROPRIETARY - Copyright © - Unpublished Work - See title page for details.

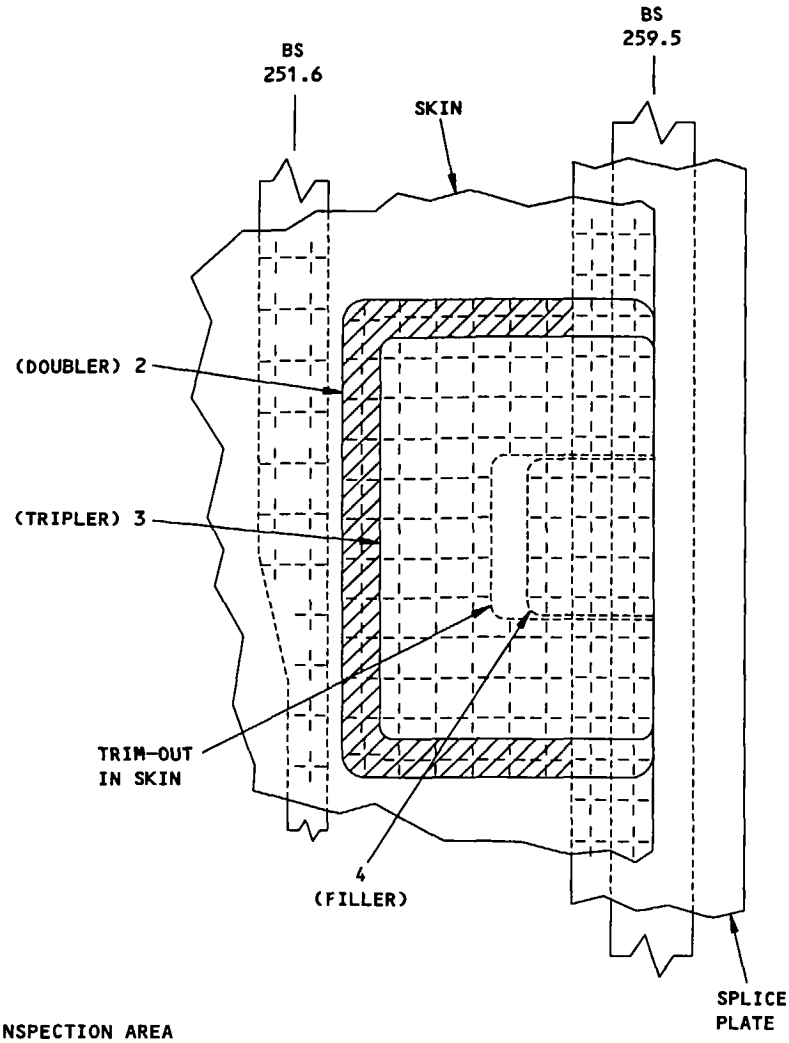

SKIN INSPECTION AREA

- FOR MFEC OR DETAILED VISUAL METHOD, INSPECT THE SKIN INTERNALLY ALONG THE OUTER FASTENER ROWS EXCEPT FOR THE SKIN UNDER THE INTERNAL STRUCTURE
- FOR LFEC METHOD, INSPECT THE SKIN EXTERNALLY THROUGH THE REPAIR DOUBLER ALONG THE ENTIRE OUTER FASTENER ROWS.

INSPECTION AREA FOR DETAIL VI IS SHOWN, ALMOST THE SAME FOR DETAIL V
DETAIL XXI

Fuselage General Skin Repair Between BS 178 and BS 259.5
Figure 49 (Sheet 27)

BOEING PROPRIETARY - Copyright © - Unpublished Work - See title page for details.

M39909

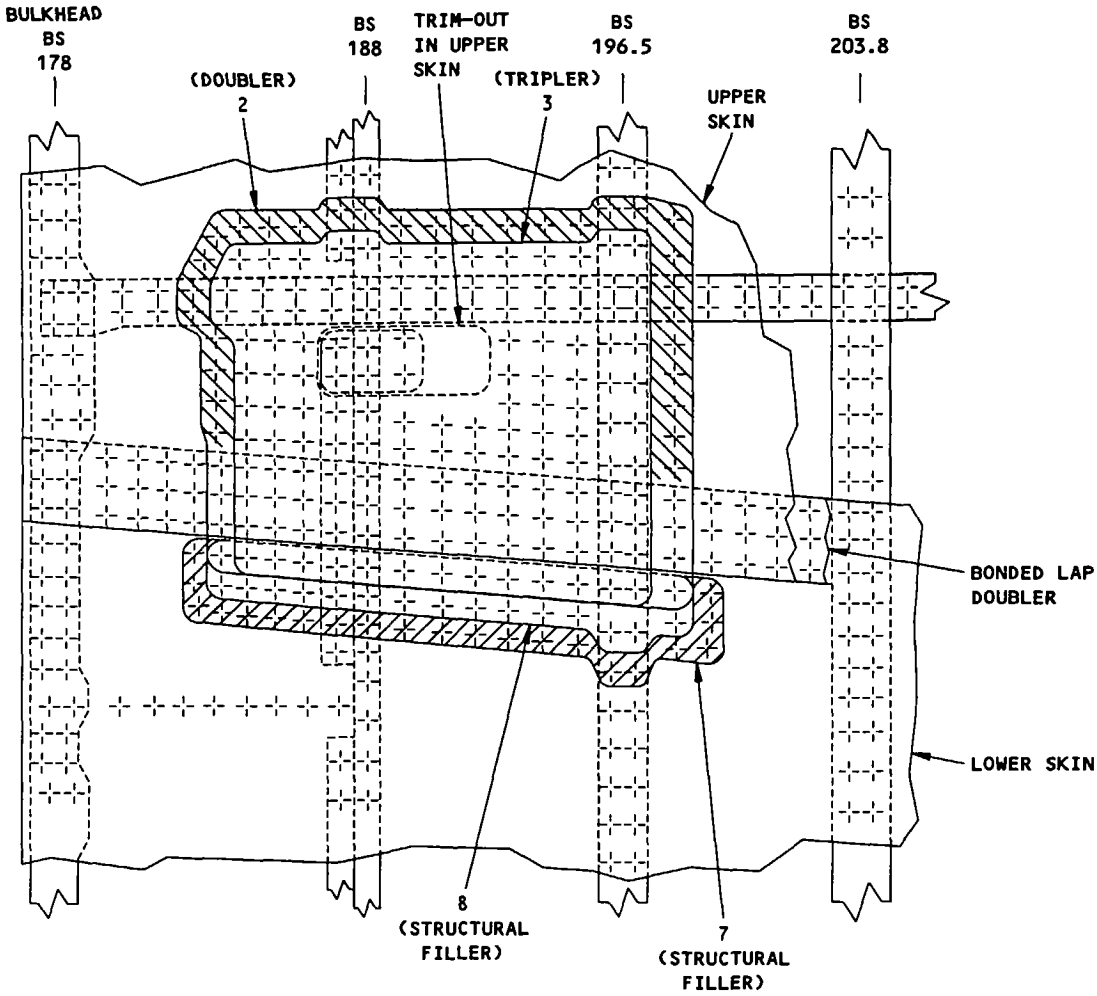

UPPER SKIN INSPECTION AREA

- FOR MFEC OR DETAILED VISUAL METHOD, INSPECT THE UPPER SKIN INTERNALLY ALONG THE OUTER FASTENER ROWS EXCEPT FOR THE SKIN UNDER THE INTERNAL STRUCTURE
- FOR LFEC METHOD, INSPECT THE UPPER SKIN EXTERNALLY THROUGH THE REPAIR DOUBLER ALONG THE ENTIRE OUTER FASTENER ROWS.

LOWER SKIN INSPECTION AREA

- FOR MFEC OR DETAILED VISUAL METHOD, INSPECT THE LOWER SKIN INTERNALLY ALONG THE OUTER FASTENER ROWS EXCEPT FOR THE SKIN UNDER THE INTERNAL STRUCTURE
- FOR LFEC METHOD, INSPECT THE LOWER SKIN EXTERNALLY THROUGH THE REPAIR DOUBLER OR STRUCTURAL FILLER ALONG THE ENTIRE OUTER FASTENER ROWS.

INSPECTION AREA FOR DETAIL X IS SHOWN, ALMOST THE SAME FOR DETAILS VII THROUGH XIX
DETAIL XXII

Fuselage General Skin Repair Between BS 178 and BS 259.5
Figure 49 (Sheet 28)

BOEING PROPRIETARY - Copyright © - Unpublished Work - See title page for details.

APPLICABILITY

THIS REPAIR FIGURE IS APPLICABLE TO 0.056 INCH THICK (OR LESS) TO FUSELAGE SKINS OR SKINS AND BONDED DOUBLERS IN SECTION 48 BETWEEN STA 1016 AND STA 1088 BELOW STRINGER 9 THAT HAVE DAMAGE IN THE AREAS SHOWN IN DETAIL I.

DO NOT USE THIS REPAIR IF THE REPAIR DOUBLER GOES INTO THE SHADED AREAS THAT ARE SHOWN IN DETAIL I AND AROUND THE APU AIR INLET DUCT CUTOUT.

REPAIR INSTRUCTIONS

NOTE: The details shown in this figure are general repair procedures. The specific damage size, shape and location can be different for actual repairs. The intent of this repair is to give general guidelines to permit you to design repairs for your specific damage. The dimensions and shape of the repair can be different than what is shown. To make sure that your repair is structurally satisfactory, you must obey the general repair rules as given in the flagnotes.

1. Get access to the damaged area.
2. Determine if a repair is permitted in the damaged area. See Detail I for the restricted areas.
3. Lay out the repair profile and the necessary fastener pattern as shown in the respective detail. If all of the requirements can not be met, do not use this repair. It is recommended that you contact the Boeing Company for repair instructions.
4. If two repairs are within three fastener rows of each other, the repairs must be combined.
5. Remove the fasteners as necessary.

CAUTION: USE SPECIAL CARE TO CUT AND REMOVE THE DAMAGED PART OF THE SKIN AND DOUBLER. DO NOT GOUGE, SCRATCH, OR BUCKLE THE STRUCTURE ADJACENT TO THE CUTOUT. IF YOU DAMAGE THE ADJACENT STRUCTURE, MORE REPAIR WORK WILL BE NECESSARY.

6. Carefully cut and remove the damaged part of the skin and doubler. Refer to the applicable detail. Make sure to keep a minimum of 0.5 inch corner radius.

NOTE: Use a thin steel sheet between the skin and stringer, or frame structure, or other adjacent structure as necessary to prevent damage to the adjacent structure.

7. Remove the steel sheet, if one was used.
8. Do a High Frequency Eddy Current (HFEC) inspection along the edge of the cutout. Make sure there are no cracks, corrosion or disbond between the skin and doubler. If there is no more damage, make the cutout larger by 0.04 inch. All cutout edges must have a finish surface smoothness of 63 microinches Ra or better. Refer to 737 NDT Manual Part 6, 51-00-00 Figure 4 for the HFEC procedure.
9. Make the repair parts. See Table I and corresponding detail. For damage between stringers and shear ties use Detail II, for damage at a stringer or shear tie use Detail III.

CAUTION: WHEN YOU MAKE THE REPAIR PARTS, MAKE SURE THAT ALL APPLICABLE REQUIREMENTS OF SRM 51-20-1, PARAGRAPHS 9 THRU 12 ARE MET. REVERSE FORMING IS NOT PERMITTED. SHIMS ARE NOT PERMITTED BETWEEN THE REPAIR PARTS AND THE FUSELAGE SKIN.

10. Pre-form or roll the repair parts to match the fuselage skin contour before they are installed. Refer to SRM 51-20-1 for Sheet Metal Materials and SRM 51-70 Figure 4 for repair part surface smoothness.
11. Assemble the repair parts. See the applicable detail.
12. Drill the fastener holes.

NOTE: Use only 5D-6D fastener spacing. The fastener pattern does not have to line up with the adjacent structure fastener pattern of adjacent structure.

13. Remove the repair parts.
14. Remove all nicks, scratches, gouges, burrs, and sharp edges from the repair parts and the skin. All surfaces must have a surface smoothness of 125 microinches Ra or better, unless a different finish is specified.
15. Apply a chemical conversion coating to the repair parts and the bare surfaces of the initial parts. Refer to SRM 51-10-2.
16. Apply one layer of BMS 10-79, Type II or III to the repair parts and the bare surfaces of the initial parts. Refer to SOPM 20-44-04. As an alternative apply a layer of BMS 10-11 Type I primer. Refer to SOPM 20-41-02.
17. Install repair washers in the countersink holes in the skin panels that will be covered by the repair parts. Install the repair washers with BMS 5-95 sealant. Refer to SRM 51-30-8.

Section 48 - Fuselage Skin Repair
Figure 50 (Sheet 1)

BOEING PROPRIETARY - Copyright © - Unpublished Work - See title page for details.

18. Make sure that the mating surfaces of the initial and repair parts mating surfaces are clean. Refer to SRM 51-20-4.

19. Assemble the repair parts with BMS 5-95 sealant on all of the mating surfaces and in all the gaps.

20. Install the fasteners. Refer to SRM 51-30. Fasteners that are not made of aluminum must be installed wet with BMS 5-95 sealant in transition fit holes. Torque the all hex drive bolts to 25 to 35 inch-pounds.

NOTE: If the production fasteners common to the repair are not rivets, or 3/16 lock-bolts or hex drive bolts, then either install the same type fastener as the production fastener or contact The Boeing Company. Install these fasteners in holes as given in the respective drawing requirements. Use the requirements on the respective production drawings to install these fasteners in the holes. D

21. Retorque the hex drive bolts in less than the squeeze-out time for the sealant as given in the BMS 5-95 specification. Refer to SRM 51-30-4.

22. Apply a fillet seal along the edges of the repair parts.

23. Apply a layer of BMS 3-23 Type 2 corrosion inhibiting compound onto the internal surface of the entire repair area after the BMS 5-95 sealant has cured. Refer to SRM 51-10-2.

24. Apply a finish to the external surface of the repair area. Refer to AMM 51-21.

NOTES

- A DAMAGE TOLERANCE ASSESSMENT IS NOT NECESSARY FOR SECTION 48 FUSELAGE SKIN REPAIRS. THUS, THIS REPAIR IS NOT SUBJECT TO THE REPAIR ASSESSMENT PROGRAM SPECIFIED IN SRM 51-00-06.
- ALL DIMENSIONS ARE IN INCHES, UNLESS SHOWN DIFFERENTLY.
- D = FASTENER DIAMETER
- USE A MINIMUM OF 2D EDGE MARGIN, UNLESS SHOWN DIFFERENTLY.
- USE 5D - 6D SPACING BETWEEN REPAIR FASTENERS.
- IF THE INITIAL FASTENER HOLE IS DAMAGED AND MUST BE OVERSIZED, USE A SAME TYPE AND 1/32 INCH OVERSIZE FASTENER. D
- MACHINED SURFACES MUST HAVE A FINISH SURFACE SMOOTHNESS OF 125 MICROINCHES Ra OR BETTER, UNLESS A DIFFERENT FINISH IS SPECIFIED.
- KEEP A MINIMUM OF 0.5 INCH RADIUS AND 2.0 INCHES INTERNAL RADIUS ON REPAIR PART CORNERS.
- IF A DRAIN HOLE IS COMMON TO THE REPAIR, EXTEND THE REPAIR PARTS A MINIMUM OF 3 FASTENERS ALL AROUND THE DRAIN HOLE. AND DRILL THE DRAIN HOLE THROUGH THE REPAIR PARTS AND REINSTALL THE DRAIN THROUGH THE REPAIR PARTS.
- CHAMFER ALL EDGES OF REPAIR PART 1 (DOUBLER) AS GIVEN IN SRM 51-70, FIGURE 1.

WHEN YOU USE THIS REPAIR REFER TO:

- AMM 51-21 FOR INTERIOR AND EXTERIOR FINISHES
- AMM 51-31 FOR SEALS AND SEALING
- NDT PART 6, 51-00-00, FIGURE 4, FOR HFEC SURFACE INSPECTION OF ALUMINUM PARTS
- NDT PART 6, 53-30-00, FIGURE 4, FOR HFEC COUNTERSINK INSPECTION OF ALUMINUM PARTS
- SOPM 20-41-02 FOR APPLICATION OF CHEMICAL AND SOLVENT RESISTANT FINISHES
- SOPM 20-44-04 FOR APPLICATION OF URETHANE COMPATIBLE PRIMER
- SRM 51-10-1 FOR INSPECTION AND REMOVAL OF DAMAGE
- SRM 51-10-2 FOR PROTECTIVE TREATMENT OF METALS
- SRM 51-10-6 FOR CORROSION REMOVAL AND SURFACE FINISHING REQUIREMENTS
- SRM 51-20-1 FOR SHEET METAL MATERIALS
- SRM 51-20-4 FOR REPAIR SEALING
- SRM 51-30 FOR FASTENER CODE, REMOVAL AND INSTALLATION, HOLE SIZES, EDGE MARGINS AND SUBSTITUTION
- SRM 51-30-8 FOR COUNTERSINKING OF HOLES AND USE OF COUNTERSINK REPAIR WASHERS

Section 48 - Fuselage Skin Repair
Figure 50 (Sheet 2)

BOEING PROPRIETARY - Copyright © - Unpublished Work - See title page for details.

NOTES (CONT)

[A] EXTEND THE DOUBLER A MINIMUM OF THREE FASTENER ROWS BEYOND ALL SIDES OF THE CUTOUT.

[B] IF THE DOUBLER ENDS ON A STRINGER, FRAME OR OTHER INTERNAL STRUCTURE, EXTEND THE DOUBLER ONE FASTENER ROW BEYOND THE INTERNAL STRUCTURE.

[C] MAKE ENSURE THAT STRUCTURAL FILLERS ARE INSTALLED AT LOCATIONS WHERE THE CUTOUT IS COMMON TO A FRAME OR STRINGER. MAKE SURE THAT THE DAMAGE CUTOUT IS LARGE ENOUGH TO PERMIT TWO ROWS OF FASTENERS TO BE INSTALLED IN THE PART 2 (STRUCTURAL FILLER).

[D] MAKE SURE THAT THE COUNTERSINK DEPTH IS NOT MORE THAN 80 PERCENT OF THE MOST EXTERNAL REPAIR PART, THICKNESS. IF IT IS MORE THAN 80 PERCENT OF THE REPAIR PART THICKNESS USE A PROTRUDING HEAD FASTENER OF THE SAME TYPE AND SIZE AS THE INITIAL FASTENER.

[E] MAKE THE FILLER THE SAME GAGE AS THE INITIAL PART THAT WAS REMOVED.

FASTENER SYMBOLS

REFERENCE FASTENER LOCATION.

INITIAL FASTENER LOCATION. IF THE INITIAL FASTENER IS A RIVET, INSTALL A FASTENER THAT IS THE SAME TYPE AND DIMENSIONS AS THE INITIAL FASTENER. IF THE INITIAL FASTENER IS A LOCK-BOLT OR A HEX-DRIVE BOLT, INSTALL SAME TYPE AND 1/64 INCH OVERSIZE FASTENER IN A TRANSITION FIT HOLE.

REPAIR FASTENER LOCATION. INSTALL A BACR15CE6D RIVET.

REPAIR MATERIAL			
PART		QTY	MATERIAL
1	DOUBLER	1	0.063 INCH THICK CLAD 2024-T3,
2	FILLER	AS NEEDED	CLAD 2024-T3, [E]

TABLE I

Section 48 - Fuselage Skin Repair
Figure 50 (Sheet 3)

BOEING PROPRIETARY - Copyright © - Unpublished Work - See title page for details.

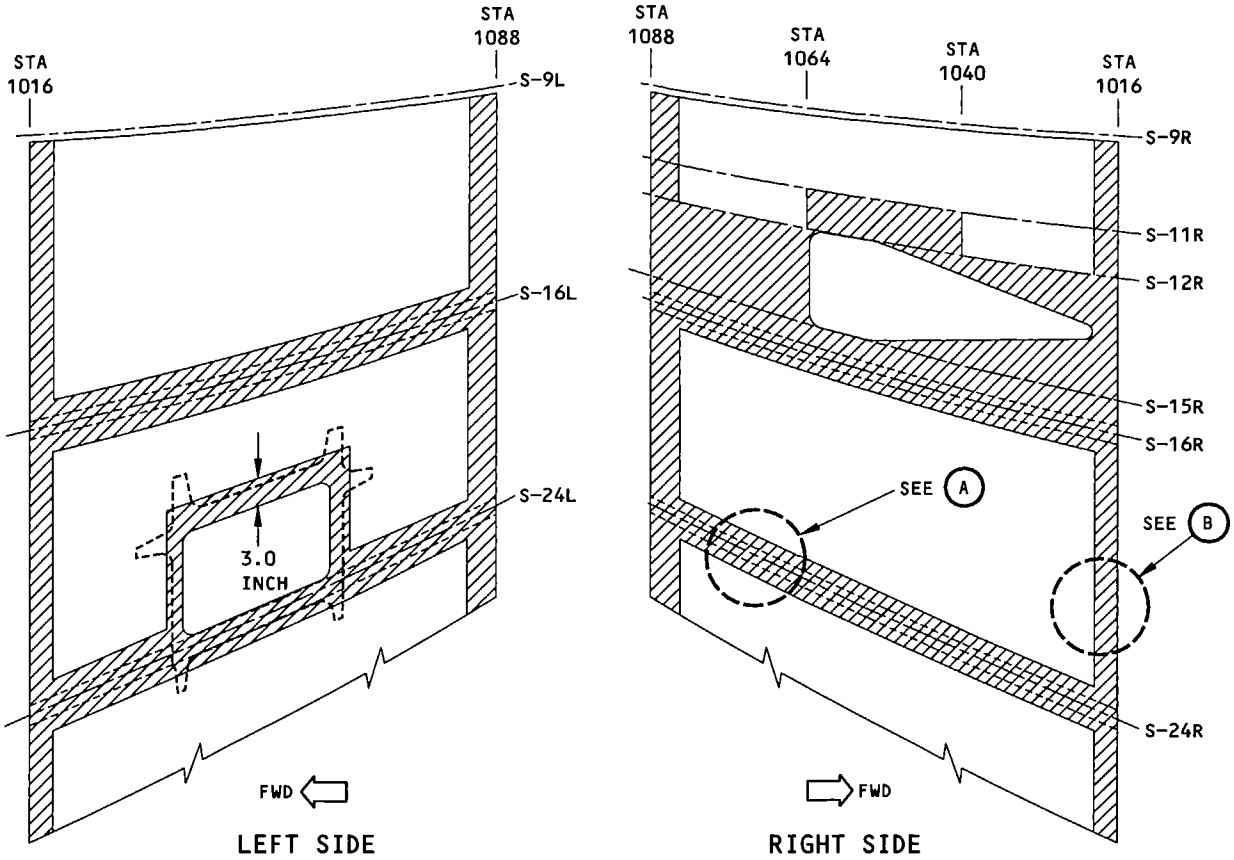

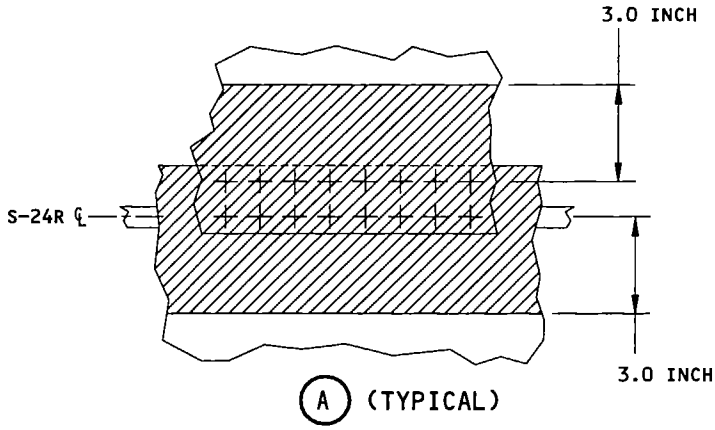

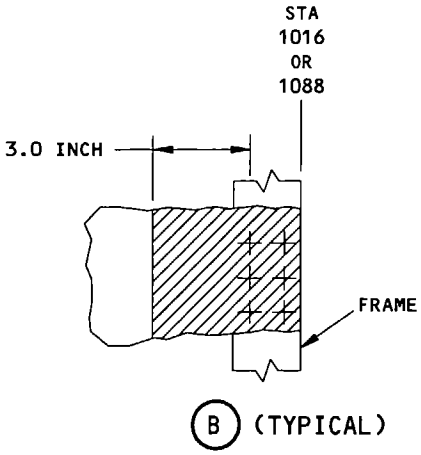

DETAIL I

NOTES

DO NOT USE THIS REPAIR IF THE REPAIR DOUBLER GOES INTO THE SHADED AREAS.

Section 48 - Fuselage Skin Repair
Figure 50 (Sheet 4)

BOEING PROPRIETARY - Copyright © - Unpublished Work - See title page for details.

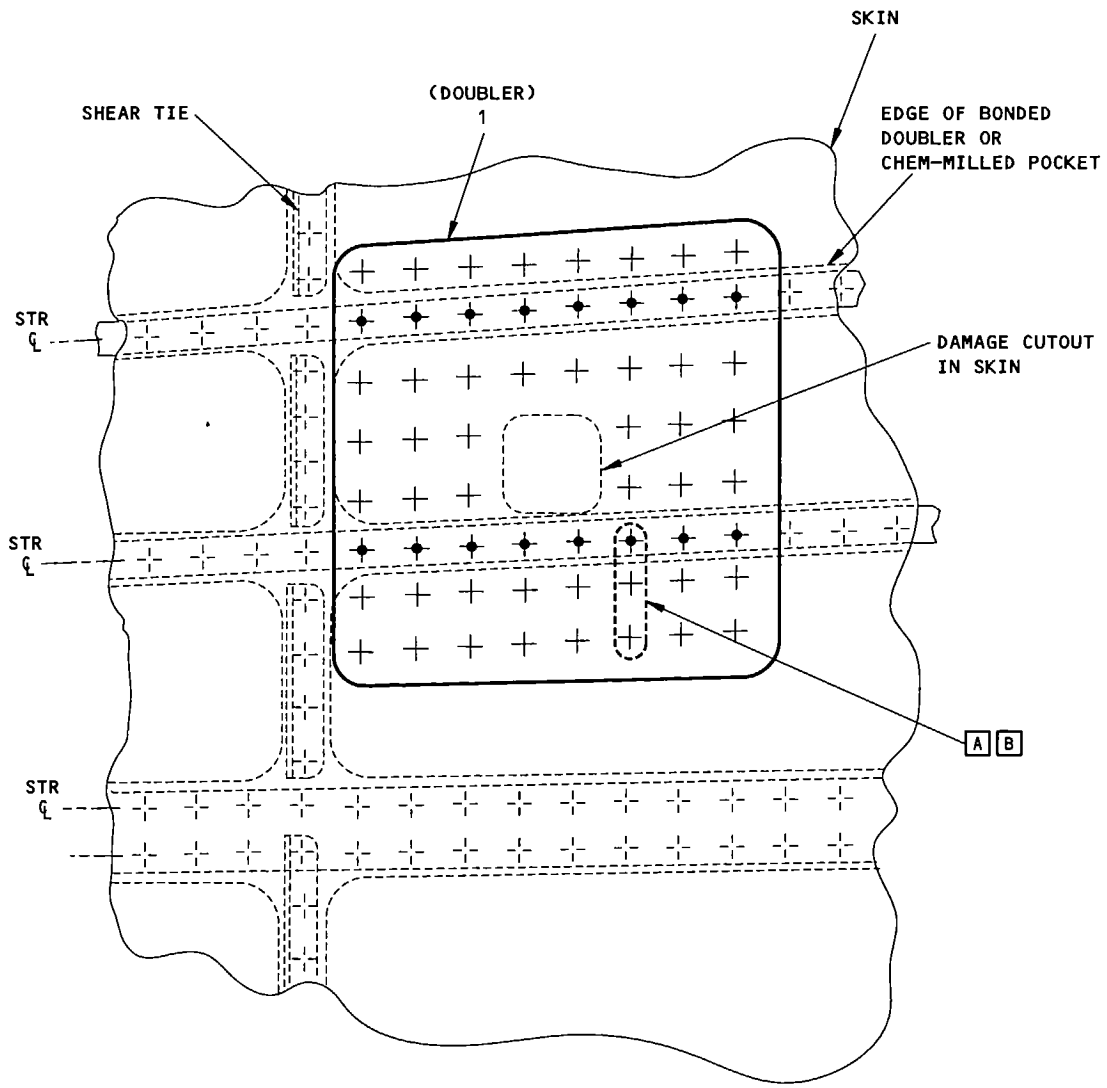

REPAIR BETWEEN STRINGERS
DETAIL II

Section 48 - Fuselage Skin Repair
Figure 50 (Sheet 5)

BOEING PROPRIETARY - Copyright © - Unpublished Work - See title page for details.

352954

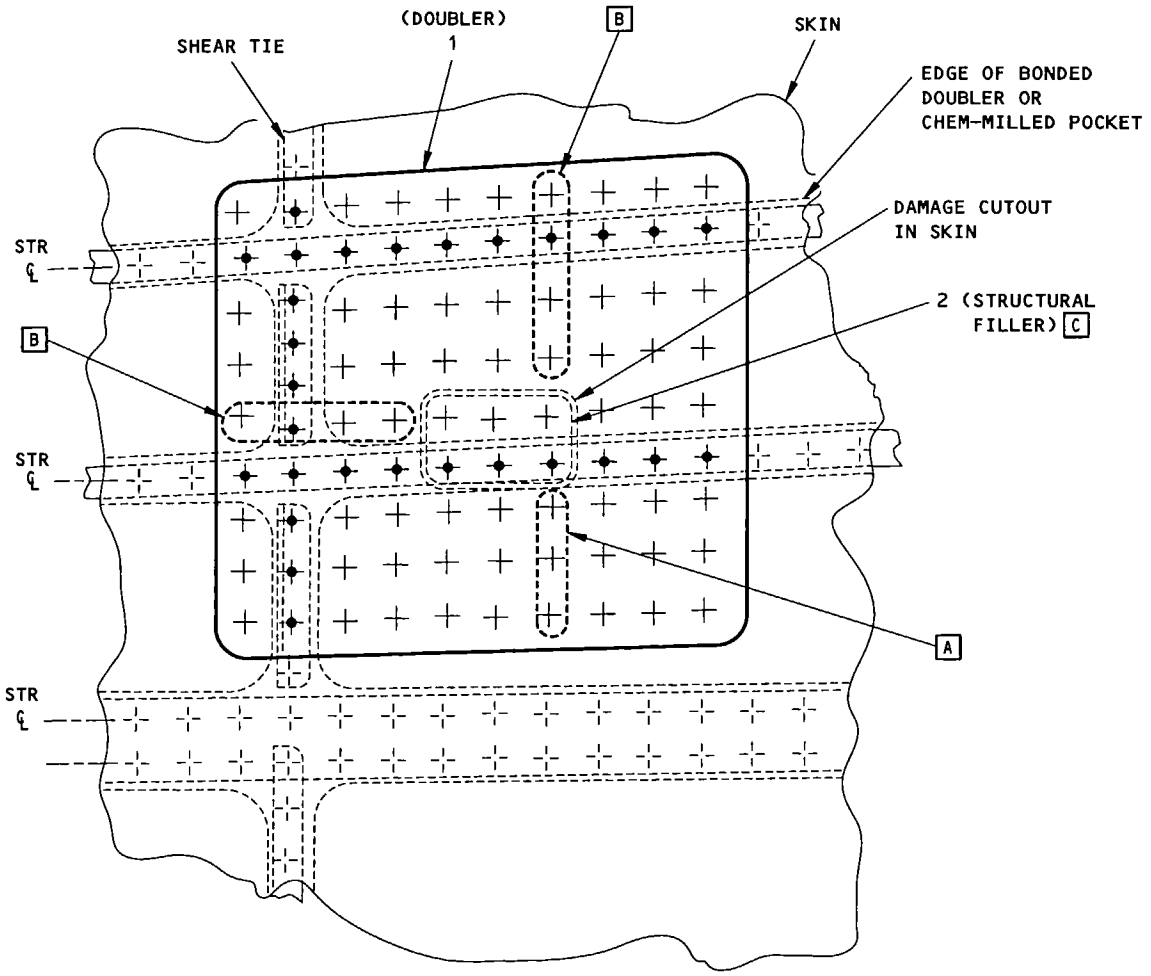

REPAIR AT STRINGER OR SHEAR TIE
DETAIL III

Section 48 - Fuselage Skin Repair
Figure 50 (Sheet 6)

BOEING PROPRIETARY - Copyright © - Unpublished Work - See title page for details.

REPAIR INSTRUCTIONS

1. Get access to the damaged area.
2. Remove the fasteners that are necessary for the repair.

CAUTION: USE SPECIAL CARE TO CUT AND REMOVE THE DAMAGED PART OF THE SKIN AND DOUBLER. DO NOT GOUGE, SCRATCH, OR BUCKLE THE STRUCTURE ADJACENT TO THE CUTOUT. IF YOU DAMAGE THE ADJACENT STRUCTURE, MORE REPAIR WORK WILL BE NECESSARY.

3. Carefully cut and remove the damaged part of the lower skin and bonded doubler. make the cutout as shown in Detail I. If the damage cannot be removed by cutting the lower skin assembly as shown in Detail I, it is recommended that you contact The Boeing Company for repair instructions.

   NOTE: Make sure to keep a minimum of 0.5 inch corner radius. Use a thin steel sheet between the skin assembly and frame structure, or other adjacent structure as necessary to prevent damage to the adjacent structure.

4. Remove the steel sheet, if one was used.
5. Do a High Frequency Eddy Current (HFEC) inspection along the edge of the cutout. Make sure there are no cracks, corrosion and disbond between the skin and bonded doubler. If there is no more damage, make the cutout larger by 0.04 inch. All cutout edges must have a finish of 63 microinches Ra or better. Refer to 737 NDT Part 6, 51-00-00 Figure 4 for HFEC procedure.
6. Make the repair parts. See Table I and Detail I.

CAUTION: WHEN YOU MAKE THE REPAIR PARTS, MAKE SURE THAT ALL APPLICABLE REQUIREMENTS OF SRM 51-20-1, PARAGRAPHS 9 THROUGH 12 ARE MET. REVERSE FORMING IS NOT PERMITTED BETWEEN THE REPAIR PARTS AND THE FUSELAGE SKIN.

7. Pre-form or roll the repair parts to match the fuselage skin contour before they are installed. Refer to SRM 51-20-1 for sheet metal materials.
8. Assemble the repair parts and drill the fastener holes.
9. Disassemble the repair parts.
10. Remove the nicks, scratches, gouges, burrs, and sharp edges from the repair parts and the bare surfaces of the initial parts.
11. Apply a chemical conversion coating to the repair parts and to the bare surfaces of the initial parts. Refer to SRM 51-10-2.
12. Apply one layer of BMS 10-79, Type II or III or BMS 10-11, Type I primer to the repair parts and to the bare surfaces of the initial parts. Refer to SRM 51-10-2.
13. Make and install countersink repair washers in existing countersink locations to be covered by the repair parts. Install repair washers with BMS 5-95 sealant. Refer to SRM 51-30-8.
14. Install the repair parts with BMS 5-95 sealant on all of the mating surfaces and in all the gaps. Refer to SRM 51-20-4.
15. Install fasteners as shown in Detail I. Install hex drive bolts wet with BMS 5-95 sealant in transistion fit holes. Torque the hex drive bolts to 25 to 35 inch-pounds.
16. Retorque the hex drive bolts in less than the squeeze-out time for the sealant as given in the BMS 5-95 specification. Refer to SRM 51-30.
17. Apply a fillet seal with BMS 5-95 sealant along the edges of the repair parts. Refer to SRM 51-2-4.
18. Apply a layer of BMS 3-23, Type 2 corrosion inhibiting compound onto the internal surface of the entire repair area after the BMS 5-95 sealant has cured. Refer to SRM 51-10-2.

NOTES

- ALL DIMENSIONS ARE IN INCHES, UNLESS SHOWN DIFFERENTLY.
- D = FASTENER DIAMETER
- USE A MINIMUM OF 2D EDGE MARGIN, UNLESS SHOWN DIFFERENTLY.
- USE 5D - 6D SPACING BETWEEN REPAIR FASTENERS.
- IF THE INITIAL FASTENER HOLE IS DAMAGED AND MUST BE OVERSIZED, USE A SAME TYPE AND 1/32 INCH OVERSIZE FASTENER.
- MACHINED SURFACES AND ALL CUTOUT EDGES MUST HAVE A SURFACE SMOOTHNESS OF 125 MICROINCHES Ra OR BETTER, UNLESS A DIFFERENT FINISH IS SPECIFIED.
- KEEP A MINIMUM OF 0.5 INCH EXTERNAL RADIUS ON REPAIR PART CORNERS.

Fuselage Skin Repair at Aft Jack Point, Station 1088
Figure 51 (Sheet 1)

BOEING PROPRIETARY - Copyright © - Unpublished Work - See title page for details.

NOTES (CONT.)

- WHEN YOU USE THIS REPAIR, REFER TO:
  - AMM 51-21 FOR INTERIOR AND EXTERIOR FINISHES
  - AMM 51-31 FOR SEALS AND SEALING
  - NDT PART 6, 51-00-00, FIGURE 4, FOR HFEC SURFACE INSPECTION OF ALUMINUM PARTS
  - SOPM 20-41-02 FOR APPLICATION OF CHEMICAL AND SOLVENT RESISTANT FINISHES
  - SOPM 20-44-04 FOR APPLICATION OF URETHANE COMPATABLE PRIMER
  - SRM 51-10-1 FOR INSPECTION AND REMOVAL OF DAMAGE
  - SRM 51-10-2 FOR PROTECTIVE TREATMENT OF METALS
  - SRM 51-10-6 FOR CORROSION REMOVAL AND SURFACE FINISHING REQUIREMENTS
  - SRM 51-20-1 FOR SHEET METAL MATERIALS
  - SRM 51-20-4 FOR REPAIR SEALING
  - SRM 51-30 FOR FASTENER CODE, REMOVAL AND INSTALLATION, HOLE SIZES, EDGE MARGINS AND SUBSTITUTION
  - SRM 51-30-8 FOR COUNTERSINKING OF HOLE AND USE OF COUNTERSINK REPAIR WASHERS.

FASTENER SYMBOLS

- REFERENCE FASTENER LOCATION.
- INITIAL FASTENER LOCATION. INSTALL A BACR15CE6D RIVET.
- INITIAL FASTENER LOCATION. INSTALL A BACB30FQ6A HEX DRIVE BOLT AND BACC30M COLLAR.
- INITIAL FASTENER LOCATION. INSTALL A BACB30KF6A HEX DRIVE BOLT AND BACC30R COLLAR.
- REPAIR FASTENER LOCATION. INSTALL A BACR15CE6D RIVET.

REPAIR MATERIAL			
PART		QTY	MATERIAL
1	STRUCTURAL FILLER	1	0.056 INCH THICK CLAD 2024-T3
2	DOUBLER	1	0.063 INCH THICK CLAD 2024-T3
3	FILLER	1	0.056 INCH THICK CLAD 2024-T3

TABLE I

Fuselage Skin Repair at Aft Jack Point, Station 1088
Figure 51 (Sheet 2)

BOEING PROPRIETARY - Copyright © - Unpublished Work - See title page for details.

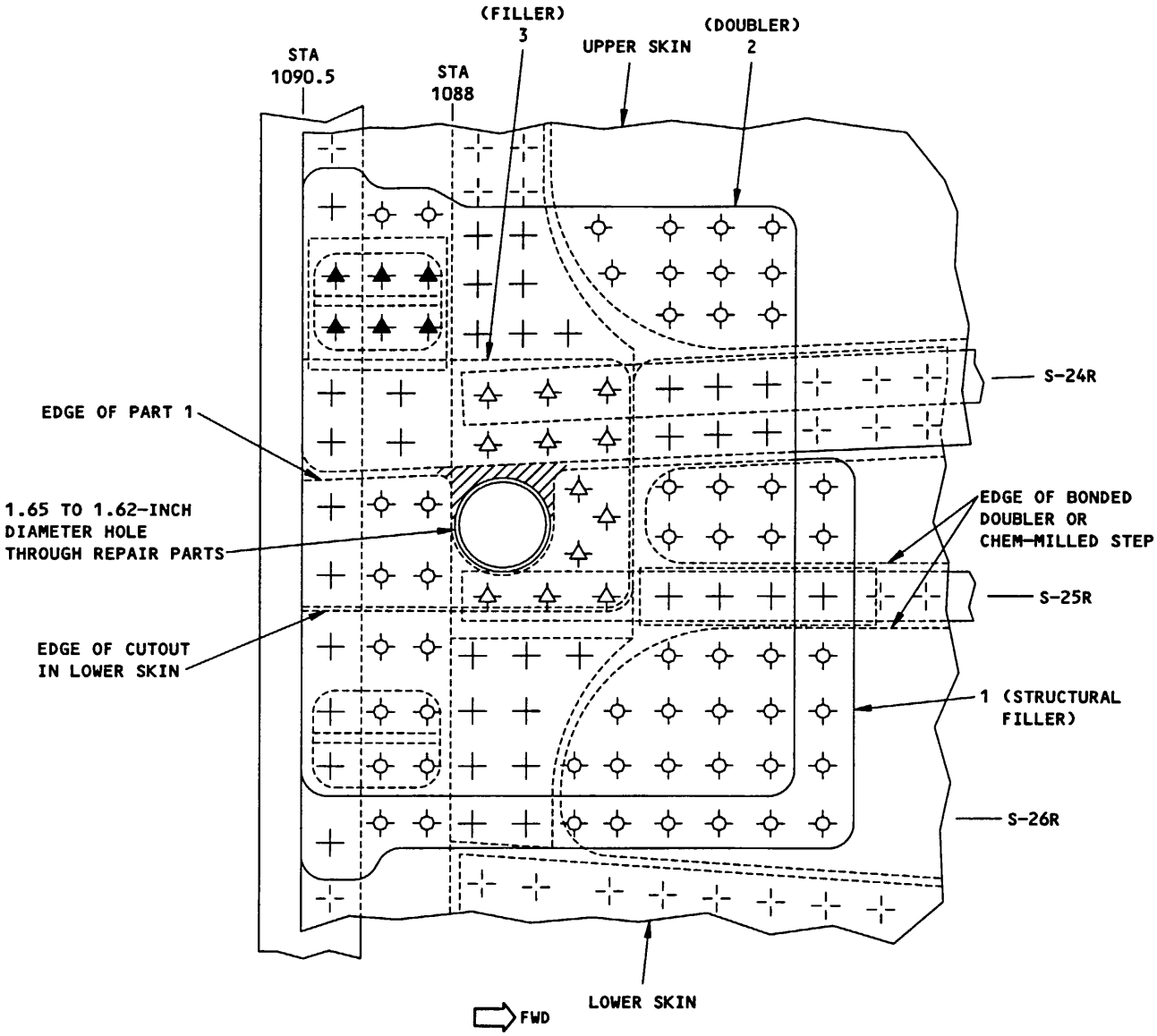

DETAIL I

Fuselage Skin Repair at Aft Jack Point, Station 1088
Figure 51 (Sheet 3)

BOEING PROPRIETARY - Copyright © - Unpublished Work - See title page for details.

APPLICABILITY

THIS REPAIR IS APPLICABLE TO THE FORWARD ENTRY DOOR CUTOUT LOWER AFT CORNER, FOR AIRPLANES WITH AN AIRSTAIRS CUTOUT, THAT HAS DAMAGE AT ONE OR ALL OF THE PARTS THAT FOLLOW:

- BEAR STRAP,
- SKIN AND BONDED DOUBLER,

DO NOT USE THIS REPAIR UNTIL YOU HAVE SATISFIED THE INSPECTION REQUIREMENTS OF THE SB 737-53-1083, REVISION 4 OR LATER.

DO NOT USE THIS REPAIR:

- IF THE DAMAGE IS LARGER THAN PERMITTED. THE MAXIMUM PERMITTED DAMAGE IS SHOWN IN DETAIL I.
- IF THERE IS DELAMINATION BETWEEN THE SKIN AND THE DOUBLER LARGER THAN PERMITTED. THE MAXIMUM PERMITTED DAMAGE IS SHOWN IN DETAIL I.
- IF THE SUM OF ALL EXTERNAL DOUBLER REPAIRS DONE ON THE FUSELAGE WILL BE MORE THAN 8100 SQUARE INCHES. [E]

REPAIR INSTRUCTIONS

1. Remove the threshold (scuff plate), equipment, and the fasteners as necessary to gain access to the repair area.

WARNING: WEAR PROTECTIVE CLOTHING AND EYE PROTECTION WHEN YOU USE SOLID CARBON DIOXIDE (DRY ICE). MAKE SURE YOU HAVE SUFFICIENT VENTILATION AND DO NOT USE DRY ICE IN AN ENCLOSED SPACE. DRY ICE CAN INJURE YOUR SKIN OR CAUSE BREATHING PROBLEMS.

CAUTION: USE SPECIAL CARE TO CUT AND REMOVE THE DAMAGED PART OF THE BEAR STRAP AND/OR SKIN AND DOUBLER. DO NOT GOUGE, SCRATCH, OR BUCKLE THE STRUCTURE ADJACENT TO THE CUTOUT. IF YOU DAMAGE THE ADJACENT STRUCTURE MORE REPAIR WORK WILL BE NECESSARY.

2. Cold soak the area with solid carbon dioxide (dry ice) for approximately 30 minutes as necessary, before you use the wedges.
3. Carefully install nylon or hardwood wedges between the bear strap, skin and doubler, frame structure, or other structure as necessary in the repair area. Use sufficient wedges to gradually separate the parts and prevent buckling.
4. Use a thin steel sheet between the bear strap and skin and doubler, or frame structure, or other adjacent structure as required to prevent damage to the adjacent structure.
5. Carefully cut and remove the damaged part of the bear strap, and/or skin and bonded doubler. Refer to Detail II and Detail III.
6. If damage is on the skin or bonded doubler, trim out both layers together. Do not attempt to separate skin from the bonded doubler.
7. Remove the steel sheet.
8. Do a High Frequency Eddy Current (HFEC) inspection along the edge of the cutout. Make sure there are no cracks, corrosion or disbond between the bear strap, skin and bonded doubler. Refer to NDT Part 6, 51-00-00 Figure 4 for the HFEC procedure.
9. If there is no more damage, make the cutout larger by 0.04 inch.
10. Remove the wedges.
11. Do an HFEC inspection of all the production fastener holes where fasteners were removed in the repair area. Refer to NDT Part 6, 51-00-00 Figure 16 and 53-30-00 Figure 4.
12. Make the repair parts as given in the applicable details and tables.
13. Preform the repair parts to match the fuselage skin contour. Refer to SRM 51-20-1 for Sheet Metal Materials and SRM 51-70 for repair part surface smoothness.
14. Assemble the repair parts. See the applicable details.
15. Drill fastener holes. Refer to Table III and applicable details for fastener type and sizes. [C]
16. Remove the repair parts.
17. If necessary, install the wedges again and put the steel sheet back in position.
18. Remove all nicks, scratches, gouges, burrs, and sharp edges from the repair parts, the bear strap, and skin and bonded doubler. The edges of the repair parts, the bear strap, and skin and bonded doubler that are common to the cutout must have a surface smoothness of 63 microinches Ra or better. All other machined surfaces must have a surface smoothness of 125 microinches Ra or better.
19. Remove the steel sheet and wedges if they were installed at above step.
20. Apply a chemical conversion coating to the repair parts and the bare surfaces of the initial parts. Refer to SRM 51-10-2.

Skin, Doubler and Bear Strap Repair at Forward Entry Door Cutout Lower Aft Corner
Figure 52 (Sheet 1)

BOEING PROPRIETARY - Copyright © - Unpublished Work - See title page for details.

21. Apply one layer of BMS 10-79, Type II or III primer to the repair parts and the bare surfaces of the initial parts. Refer to SOPM 20-44-04.
22. Install repair washers in the countersink holes in the skin panels between the repair parts and the skin. Install them with BMS 5-95 sealant. Refer to SRM 51-30-8.
23. The maximum permitted gap between the mating surfaces is 0.010 inch before you install the fasteners.
24. Clean the mating surfaces of the initial and repair parts. Refer to SRM 51-10-1.
25. Assemble the repair parts with BMS 5-95 sealant on all of the mating surfaces and in all the gaps. Refer to SRM 51-20-04.
26. Install the fasteners within the squeeze-out life of the sealant. Refer to SRM 51-20-4. Fasteners that are not made of aluminum must be installed wet with BMS 5-95 sealant.
27. Retorque the hex drive bolts in less than the squeeze-out time for the sealant as given in the BMS 5-95 specification. Refer to SRM 51-30-4.
28. Apply a fillet seal along the edges of the repair parts.
29. Apply a layer of BMS 3-23 Type 2 corrosion inhibiting compound on the internal surface of the entire repair area. Refer to SRM 51-10-2.
30. Apply a finish to the external surface of the repair area. Refer to AMM 51-21.
31. If the threshold/scuff plate was removed to install the repair parts, Repair the threshold/scuff plate as necessary and install as follows:

    Note: The incorrect installation of the scuff plate could cause a pressure leak around the door edges. The scuff plate is not a structural part. You can do your own repair procedure or follow the steps below.

    a) Cut the crest of the threshold/scuff plate as necessary to fit over the repair parts.

    b) Weld the threshold/scuff plate. Refer to BAC5977.

    c) Sand the edges and outer surfaces, in a constant direction, with 120-grit abrasive.

    d) Apply one layer of BMS 10-79, Type II primer to the inner surfaces of the threshold. Refer to SOPM 20-44-04.

    e) Apply a coat of strippable parting agent to all faying surfaces of the threshold/scuff plate and fuselage skin/repair parts.

    f) Apply a layer of BMS 3-23 Type 2 corrosion inhibiting compound to the surfaces under the threshold where no parting agent was applied.

    g) Pack BMS 5-95 sealants into the threshold/scuff plates before you install the part.

    h) Install the threshold/scuff plate with the same type fasteners as the initial fasteners. Make sure the fasteners have the correct grip length. Make sure that the sealant that squeezes out along the bottom of the threshold/scuff plates is continuous and without gaps. Remove the excess sealant.

    NOTE: There can be excessive cabin noise and air leaks if there are sealant gaps along the bottom of the threshold/scuff plates.

    i) Make a ramp of fairing compound in the upper corners of the scuff plates to the doorway frame to give a smooth transition for the door seal. Refer to SRM 51-40-1 Figure 1 for suggested fairing compounds. Protect the threshold with tape and sand the seal ramp smooth.

NOTES

- THESE REPAIRS (DETAIL II AND III) ARE CATEGORY B REPAIRS. THE CATEGORY B REPAIR HAS FAA APPROVAL IF YOU DO THE SUPPLEMENTAL INSPECTIONS GIVEN IN TABLE IV. INCORPORATION OF THESE INSPECTION REQUIREMENTS INTO THE AIRPLANE'S MAINTENANCE PROGRAM SATISFIES THE DAMAGE TOLERANCE ASSESSMENT OF THE REPAIR SPECIFIED BY THE REPAIR ASSESSMENT PROGRAM. THIS ASSESSMENT CAN BE DONE AFTER YOU RELEASE THE AIRPLANE TO SERVICE. REFER TO SRM 51-00-6 FOR REPAIR CATEGORIES, DEFINITIONS AND GENERAL DATA ABOUT THE REPAIR ASSESMENT PROGRAM. REFER TO DETAILS IV THROUGH VI AS APPLICABLE FOR THE INSPECTION AREAS.
- THESE REPAIRS (DETAIL II AND III) WILL HAVE AN EFFECT ON THE STRUCTURALLY SIGNIFICANT ITEM (SSI):
  - NUMBER F-14 WHEN INSTALLED AT A DOOR WITH AIRSTAIRS, BUT THE SUPPLEMENTAL INSPECTIONS GIVEN IN TABLE IV WILL MEET THE SSID EXTERNAL INSPECTION REQUIREMENTS FOR F-14A IN THE REPAIR AREA. HOWEVER, THE INTERNAL INSPECTION OF THE FRAME OUTER CHORD FOR F-14B IS STILL APPLICABLE

Skin, Doubler and Bear Strap Repair at Forward Entry Door Cutout Lower Aft Corner
Figure 52 (Sheet 2)

BOEING PROPRIETARY - Copyright © - Unpublished Work - See title page for details.

NOTES (CONTINUED)

DO THE INTERNAL INSPECTIONS FOR F-14B, IF NECESSARY, AT THE SUBSEQUENT SUPPLEMENTAL STRUCTURAL INSPECTION DOCUMENT (SSID) INSPECTION ON THIS AIRPLANE. REFER TO SRM 51-00-4, FIGURE 3 FOR APPLICABLE SSI DATA.

- ALL DIMENSIONS ARE IN INCHES, UNLESS SHOWN DIFFERENTLY.
- D = FASTENER DIAMETER
- T = REPAIR PART THICKNESS.
- USE A MINIMUM OF 2D EDGE MARGIN, UNLESS SHOWN DIFFERENTLY.
- KEEP A MINIMUM OF 0.5 INCH EXTERNAL RADIUS AND 2.0 INCHES INTERNAL RADIUS ON REPAIR PART CORNERS.
- CHAMFER ALL EDGES OF REPAIR PARTS NOT COMMON TO THE DOOR CUTOUT.
- WHEN YOU DRILL NEW FASTENER HOLES USE CARE NOT TO DRILL NEAR THE EDGE OF THE BEAR STRAP.
- WHEN YOU USE THIS REPAIR REFER TO:
  - AMM 51-21 FOR INTERIOR AND EXTERIOR FINISHES
  - AMM 51-31 FOR SEALS AND SEALING
  - NDT PART 6, 51-00-00, FIGURE 16, FOR HFEC ALUMINUM PART FASTENER HOLE INSPECTION
  - NDT PART 6, 53-30-00, FIGURE 4, FOR HFEC COUNTERSINK INSPECTION OF ALUMINUM PARTS
  - SOPM 20-44-04 FOR APPLICATION OF URETHANE COMPATIBLE PRIMER
  - SRM 51-00-4 FOR A LIST OF STRUCTURALLY SIGNIFICANT ITEMS (SSID DETAILS)
  - SRM 51-00-6 FOR STRUCTURAL REPAIR DEFINITIONS
  - SRM 51-10-1 FOR INSPECTION AND REMOVAL OF DAMAGE
  - SRM 51-10-2 FOR PROTECTIVE TREATMENT OF METAL
  - SRM 51-10-6 FOR CORROSION REMOVAL AND SURFACE FINISHING REQUIREMENTS
  - SRM 51-20-1 FOR SHEET METAL MATERIALS
  - SRM 51-20-4 FOR REPAIR SEALING
  - SRM 51-30 FOR FASTENER REMOVAL AND INSTALLATION, HOLE SIZES AND EDGE MARGINS
  - SRM 51-30-8 FOR COUNTERSINKING OF HOLES AND USE OF COUNTERSINK REPAIR WASHERS
  - SRM 51-70 FOR AERODYNAMIC SMOOTHNESS REQUIREMENTS

[A] THE THICKNESS OF THE PART 3 (FILLER) MUST BE EQUAL TO THE TOTAL THICKNESS OF THE CUTOUT (BEAR STRAP AND/OR SKIN AND BONDED DOUBLER).

[B] THIS DETAIL SHOWS THE MAXIMUM PERMITTED DAMAGE. IF THE DAMAGE CANNOT BE REMOVED WITHIN THIS ZONE, DO NOT USE THIS REPAIR.

[C] MAKE SURE THE DEPTH OF THE COUNTERSINK WILL NOT BE MORE THAN 80 PERCENT OF THE REPAIR PART THICKNESS, WHEN YOU USE COUNTERSINK FASTENERS. USE PROTRUDING HEAD FASTENERS TO PREVENT COUNTERSINK DEPTHS LARGER THAN 80 PERCENT OF THE SHEET THICKNESS.

[D] IF THE AIRPLANE HAS LESS THAN 66,000 FLIGHT CYCLES, THE INSPECTION THRESHOLD IS THE EARLIER OF:

- THE INITIAL SCHEDULED INSPECTION AS GIVEN IN THE OPERATOR'S REPAIR ASSESSMENT PROGRAM (RAP)
- 66,000 FLIGHT CYCLES.

IF THE AIRPLANE HAS MORE THAN 66,000 FLIGHT CYCLES AND THE INITIAL SCHEDULED SUPPLEMENTAL STRUCTURAL INSPECTION DOCUMENT (SSID) INSPECTION HAS BEEN PERFORMED, THE INSPECTION THRESHOLD IS:

- THE NEXT SCHEDULED SSID INSPECTION FOR THE STRUCTURALLY SIGNIFICANT ITEM F-14A IN THE REPAIRED AREA.

[E] IF THE SUM OF ALL EXTERNAL DOUBLER REPAIRS DONE ON THE FUSELAGE WILL BE MORE THAN 8100 SQUARE INCHES, CONTACT THE BOEING COMPANY FOR AN AERODYNAMIC ANALYSIS.

FASTENER SYMBOLS

- REFERENCE FASTENER LOCATION.
- INITIAL THRESHOLD FASTENER HOLES.
- INITIAL BOLT LOCATION INSTALLED WITH A NUT PLATE. INSTALL A BACB30ZE4-() (OPTIONAL BACB30LL4-(*)) BOLT IN A 0.250-0.254 DIA HOLE.
- INITIAL FASTENER LOCATION. SEE TABLE III FOR THE TYPE OF FASTENER INSTALLATION.
- NEW FASTENER LOCATION. INSTALL A BACB30FN(6)A OR BACB30FM(6)A HEX DRIVE BOLT WITH A BACC30M6 COLLAR.
- INITIAL FASTENER LOCATION. BACK DRILL FROM THE INITIAL HOLE (0.190-0.195 INCH DIA) THROUGH DOUBLER AND TRIPLER. INSTALL A BACB30ZE3-() (OPTIONAL BACB30LL3-(*)) BOLT.

Skin, Doubler and Bear Strap Repair at Forward Entry Door Cutout Lower Aft Corner
Figure 52 (Sheet 3)

BOEING PROPRIETARY - Copyright © - Unpublished Work - See title page for details.

REPAIR MATERIALS FOR SKIN AND BONDED DOUBLER OR BEAR STRAP CRACKS PARTS			
PARTS		QTY	MATERIAL
1	DOUBLER	1	0.063 INCH THICK FOR DETAIL II, 0.080 INCH THICK FOR DETAIL III, CLAD 2024-T3
2	TRIPLER	1	0.063 INCH THICK FOR DETAIL II, 0.080 INCH THICK FOR DETAIL III, CLAD 2024-T3
3	FILLER	1	CLAD 2024-T3, SAME THICKNESS AS MATERIAL REMOVED [A]

TABLE I

REPAIR MATERIALS FOR SKIN, BONDED DOUBLER AND BEAR STRAP CRACKS PARTS			
PARTS		QTY	MATERIAL
1	DOUBLER	1	0.100 INCH THICK, CLAD 2024-T3
2	TRIPLER	1	0.125 INCH THICK FOR DETAIL II ONLY, 0.160 INCH THICK FOR DETAIL III ONLY, CLAD 2024-T3
3	FILLER	1	CLAD 2024-T3, SAME THICKNESS AS MATERIAL REMOVED [A]

TABLE II

INITIAL FASTENER	REPLACEMENT FASTENER FOR FRAME, STRINGER AND BEAR STRAP
DOUBLE COUNTERSINK RIVET	DOUBLE COUNTERSINK BACR15CE6D
6/32 DIAMETER RIVET	BACB30KF(6)A OR BACB30KK(6)A WITH A BACC30R COLLAR
COUNTERSINK SHEAR HEAD HEX DRIVE BOLT OR COUNTERSINK SHEAR HEAD LOCKBOLT	BACB30FQ(6)A WITH A BACC30M COLLAR, OR BACB30FP(6)A WITH A BACC30M COLLAR.
5/32 DIAMETER RIVET	BACB30FN(6)A OR BACB30FM(6)A WITH A BACC30M COLLAR

REPLACEMENT FASTENER FOR INITIAL FASTENER LOCATIONS
TABLE III

Skin, Doubler and Bear Strap Repair at Forward Entry Door Cutout Lower Aft Corner
Figure 52 (Sheet 4)

BOEING PROPRIETARY - Copyright © - Unpublished Work - See title page for details.

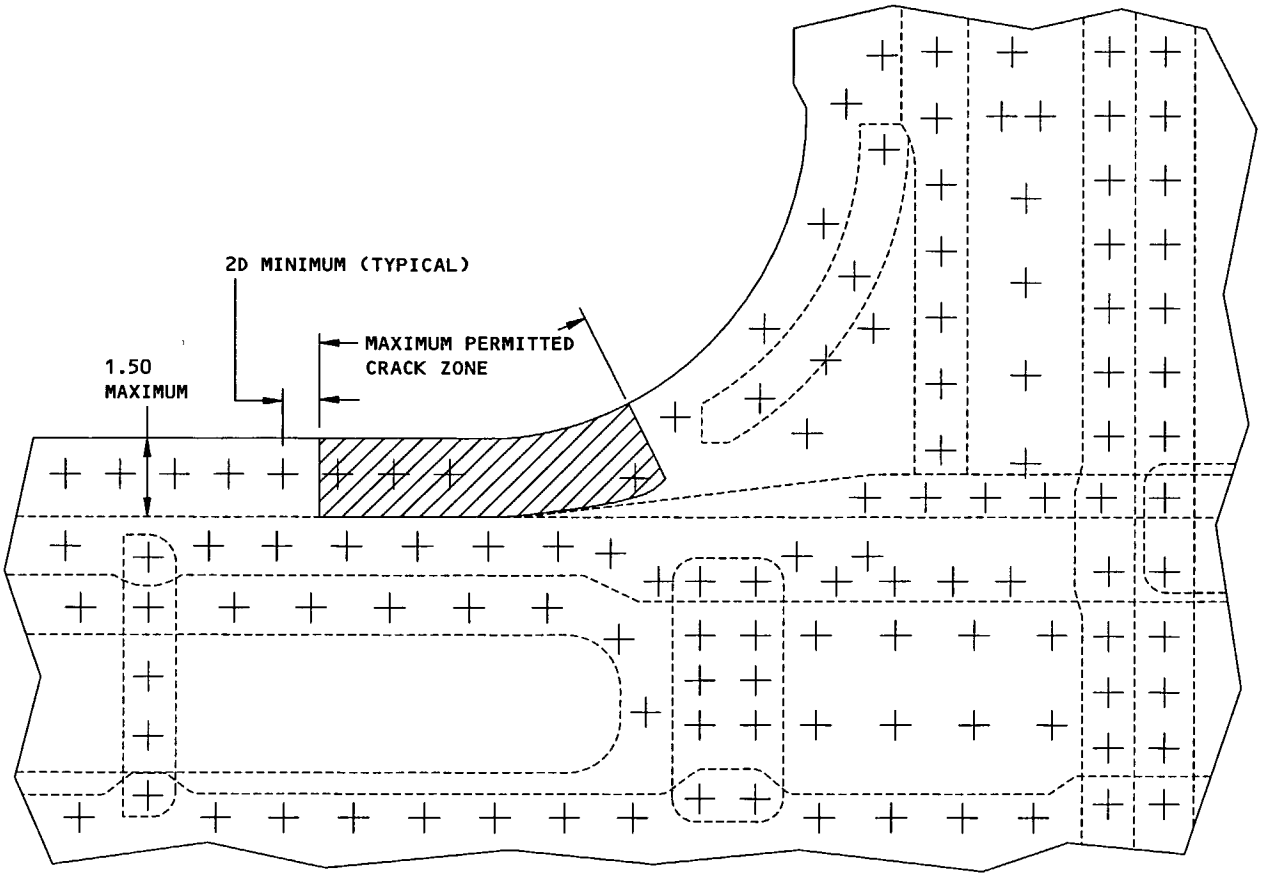

DETAIL I [B]

Skin, Doubler and Bear Strap Repair at Forward Entry Door Cutout Lower Aft Corner
Figure 52 (Sheet 5)

BOEING PROPRIETARY - Copyright © - Unpublished Work - See title page for details.

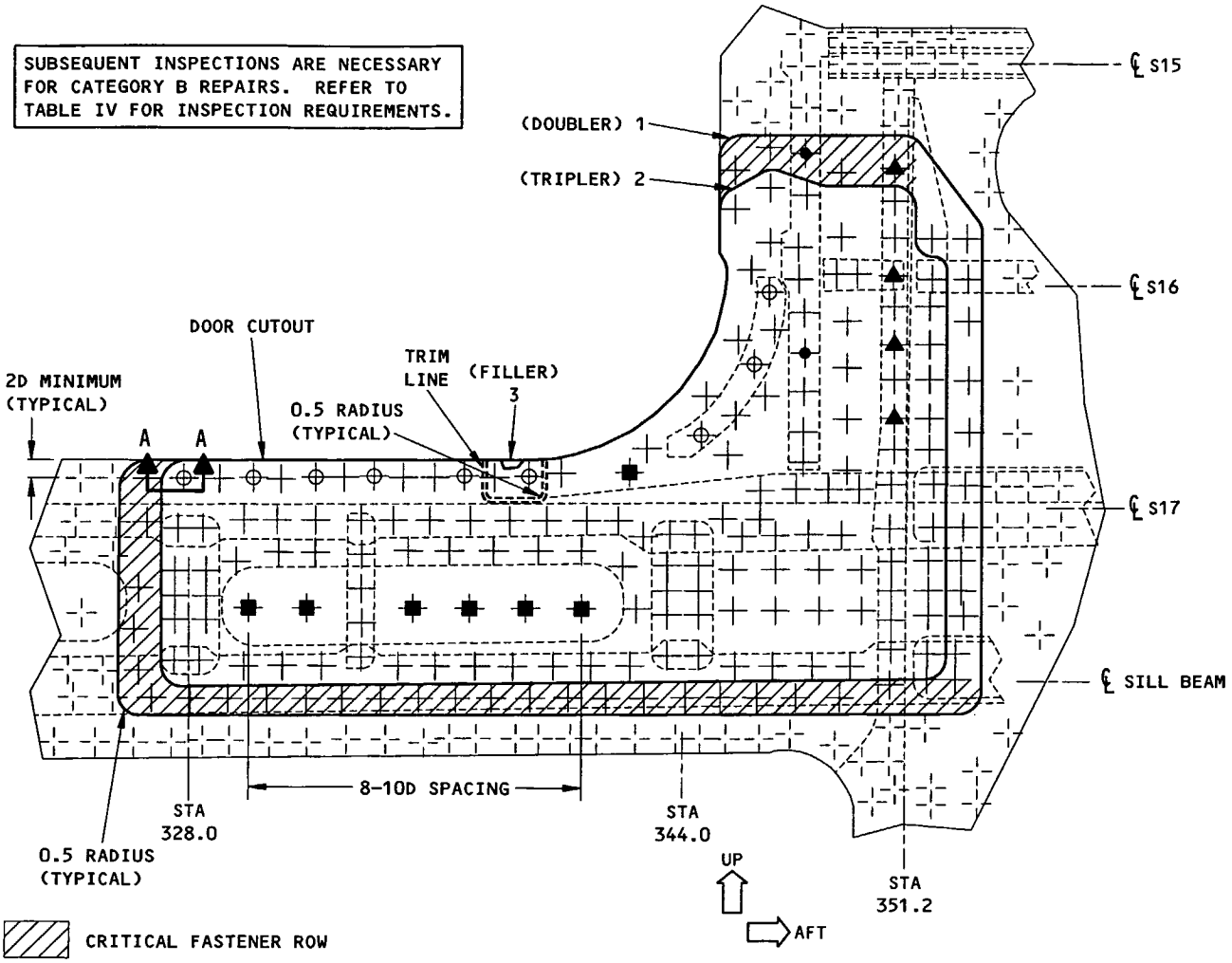

DOOR CUTOUT REPAIR

737-100/-200 PASSENGER AIRPLANES ONLY
DETAIL II

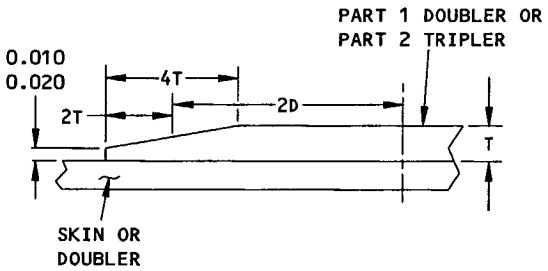

TYPICAL REPAIR PART EDGE CHAMFERING
TO ALL EDGES EXCEPT FOR DOOR CUTOUT
SECTION A-A

Skin, Doubler and Bear Strap Repair at Forward Entry Door Cutout Lower Aft Corner
Figure 52 (Sheet 6)

BOEING PROPRIETARY - Copyright © - Unpublished Work - See title page for details.

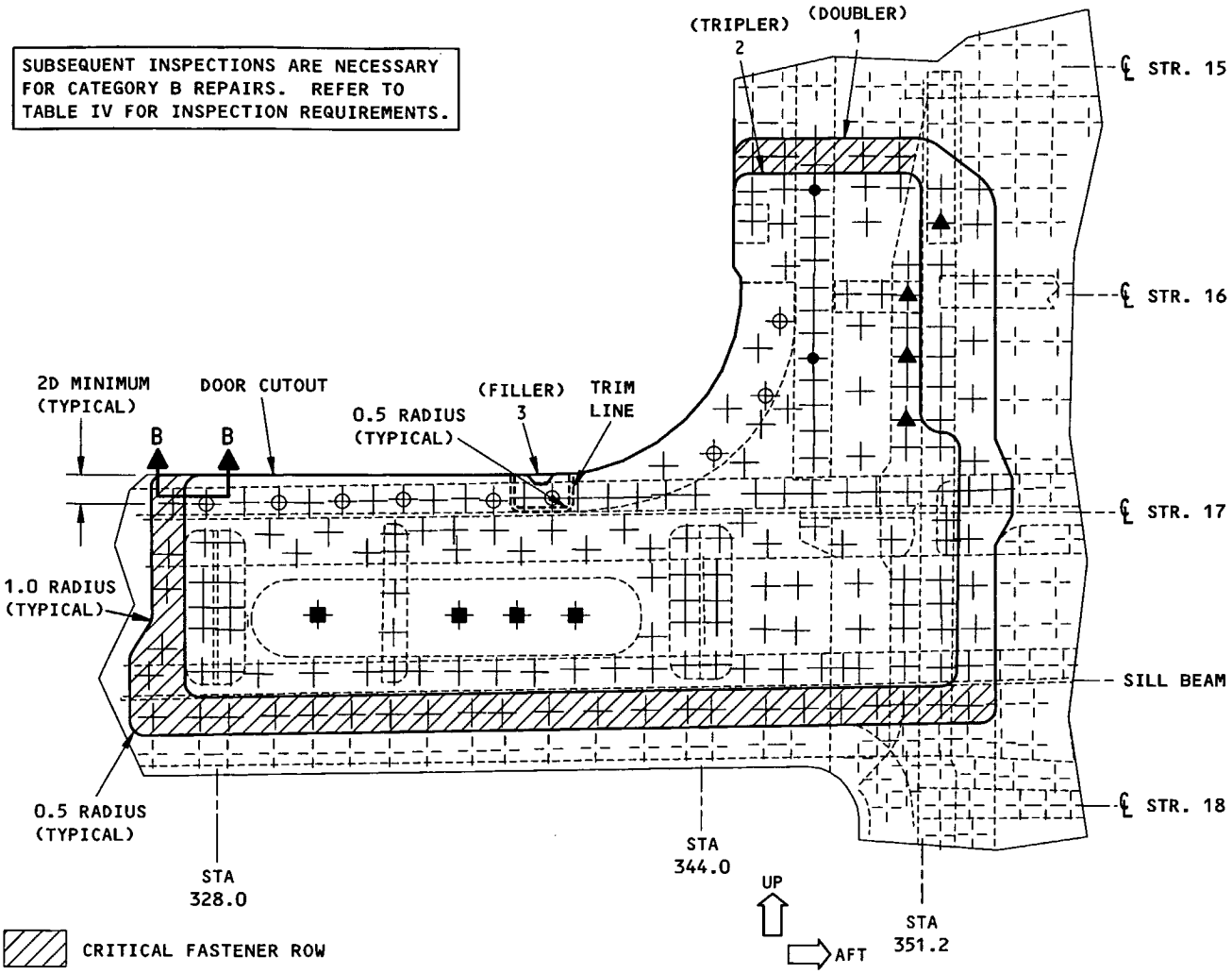

DOOR CUTOUT REPAIR

737-200C CARGO AIRPLANES ONLY
DETAIL III

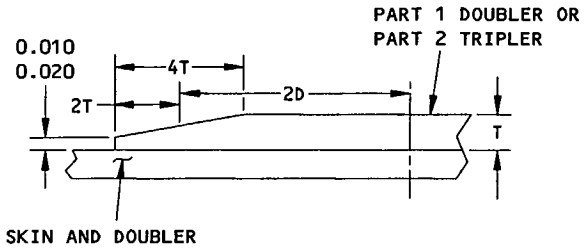

TYPICAL REPAIR PART EDGE CHAMFERING
TO ALL EDGES EXCEPT FOR DOOR CUTOUT
SECTION B-B

Skin, Doubler and Bear Strap Repair at Forward Entry Door Cutout Lower Aft Corner
Figure 52 (Sheet 7)

BOEING PROPRIETARY - Copyright © - Unpublished Work - See title page for details.

CATEGORY B REPAIR AND SSI F-14A INSPECTION REQUIREMENTS				
INSPECTION THRESHOLD	ALTERNATIVE	REPEAT INSPECTION ALTERNATIVES		
		METHOD	INTERVAL	REFERENCE
D	A	MEDIUM FREQUENCY EDDY CURRENT (MFEC)	24,000 FLIGHT CYCLES	737 NDT, PART 6, 53-30-00, FIGURE 6
		GENERAL VISUAL (SURVEILLANCE) INSPECTION		
	B	LOW FREQUENCY EDDY CURRENT (LFEC)	4,000 FLIGHT CYCLES	737 NDT, PART 6, 53-30-00, FIGURE 5

NOTE: FOR DETAIL II REPAIR:

- USE ALTERNATIVE B FOR THE EXTERNAL INSPECTION OF THE SKIN AND BEARSTRAP AS SHOWN IN DETAIL IV.

FOR DETAIL III REPAIR USE ONE OF THE TWO ALTERNATIVES:

- USE ALTERNATIVE A FOR INTERNAL INSPECTION OF THE SKIN, BEARSTRAP, FRAME AND SILL OUTER CHORD AS SHOWN IN DETAIL V.
- USE ALTERNATIVE B FOR EXTERNAL INSPECTION OF THE SKIN AND BEARSTRAP AS SHOWN IN DETAIL VI.

TABLE IV

Skin, Doubler and Bear Strap Repair at Forward Entry Door Cutout Lower Aft Corner
Figure 52 (Sheet 8)

BOEING PROPRIETARY - Copyright © - Unpublished Work - See title page for details.

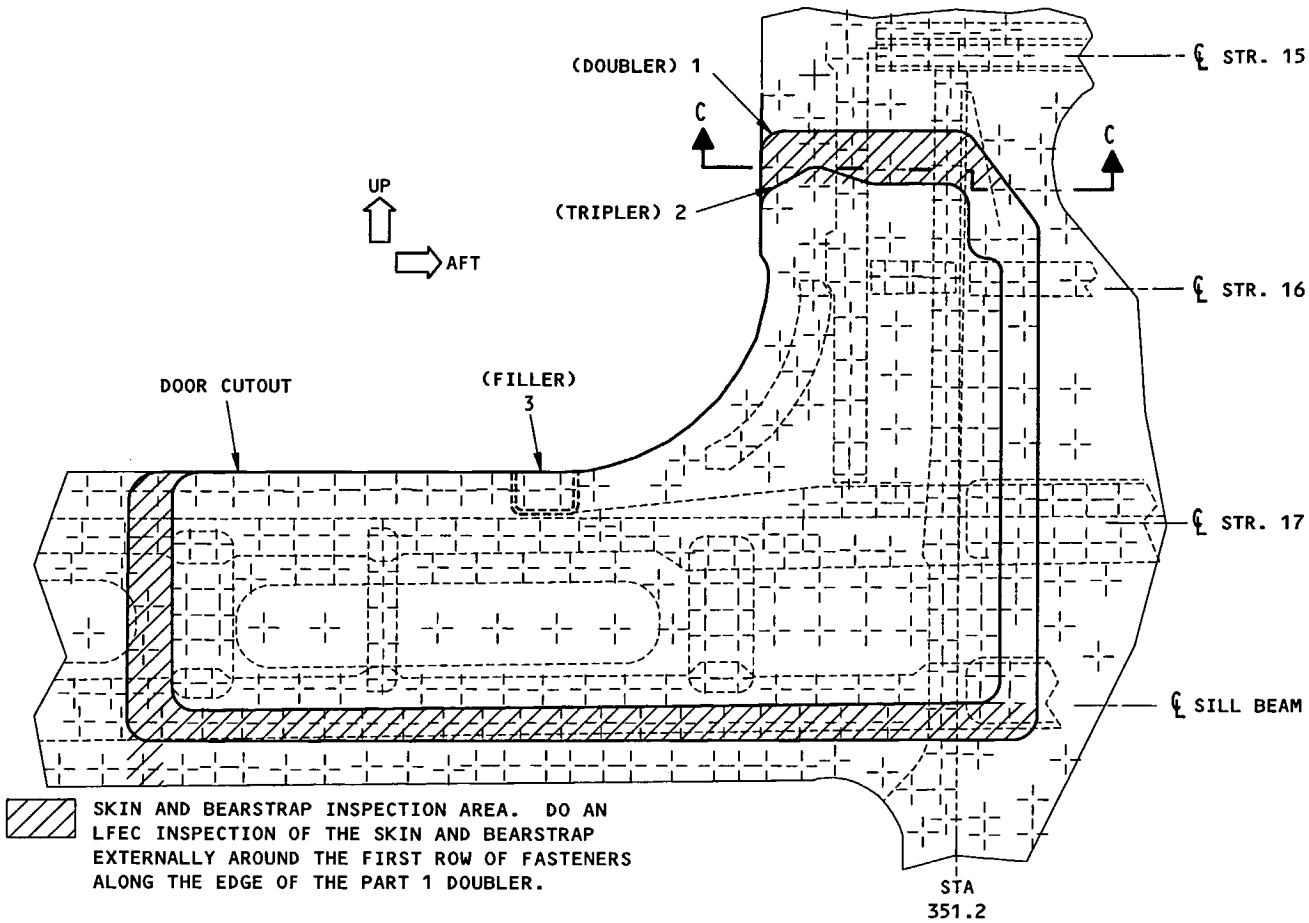

ALTERNATIVE B INSPECTION AREAS FOR DETAIL II
DETAIL IV

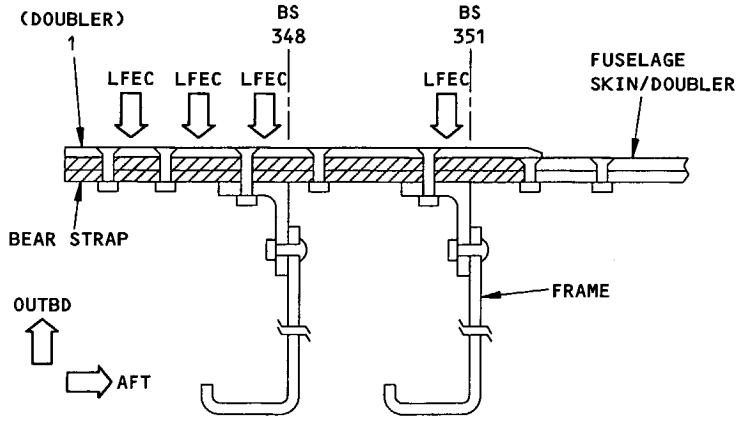

SECTION C-C

Skin, Doubler and Bear Strap Repair at Forward Entry Door Cutout Lower Aft Corner
Figure 52 (Sheet 9)

BOEING PROPRIETARY - Copyright © - Unpublished Work - See title page for details.

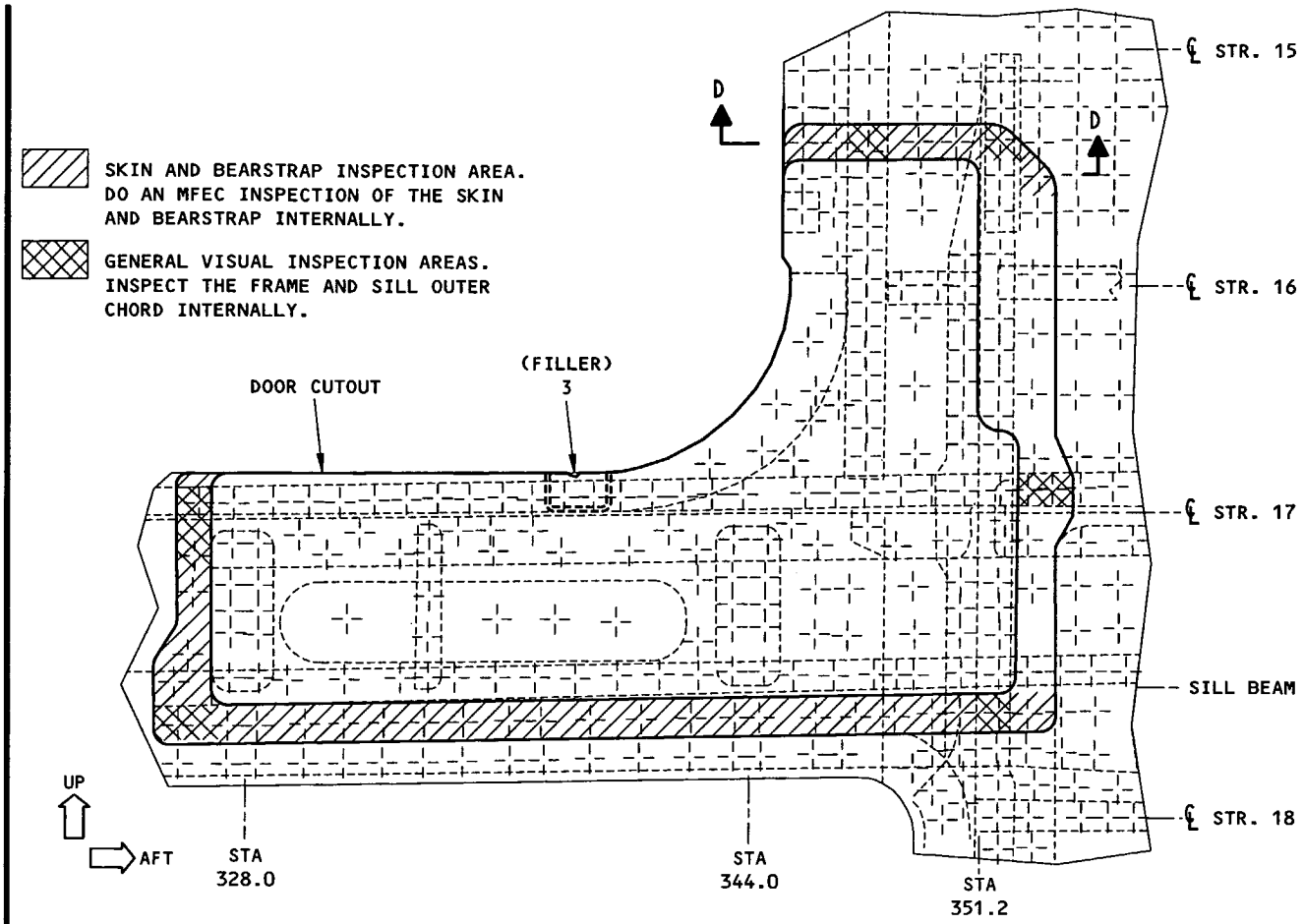

ALTERNATIVE A INSPECTION AREAS FOR DETAIL III
DETAIL V

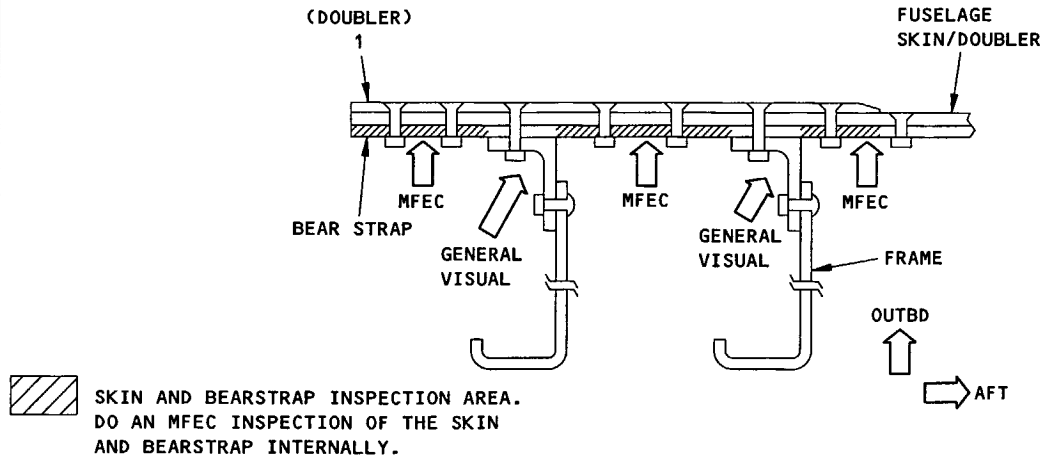

SECTION D-D

Skin, Doubler and Bear Strap Repair at Forward Entry Door Cutout Lower Aft Corner
Figure 52 (Sheet 10)

BOEING PROPRIETARY - Copyright © - Unpublished Work - See title page for details.

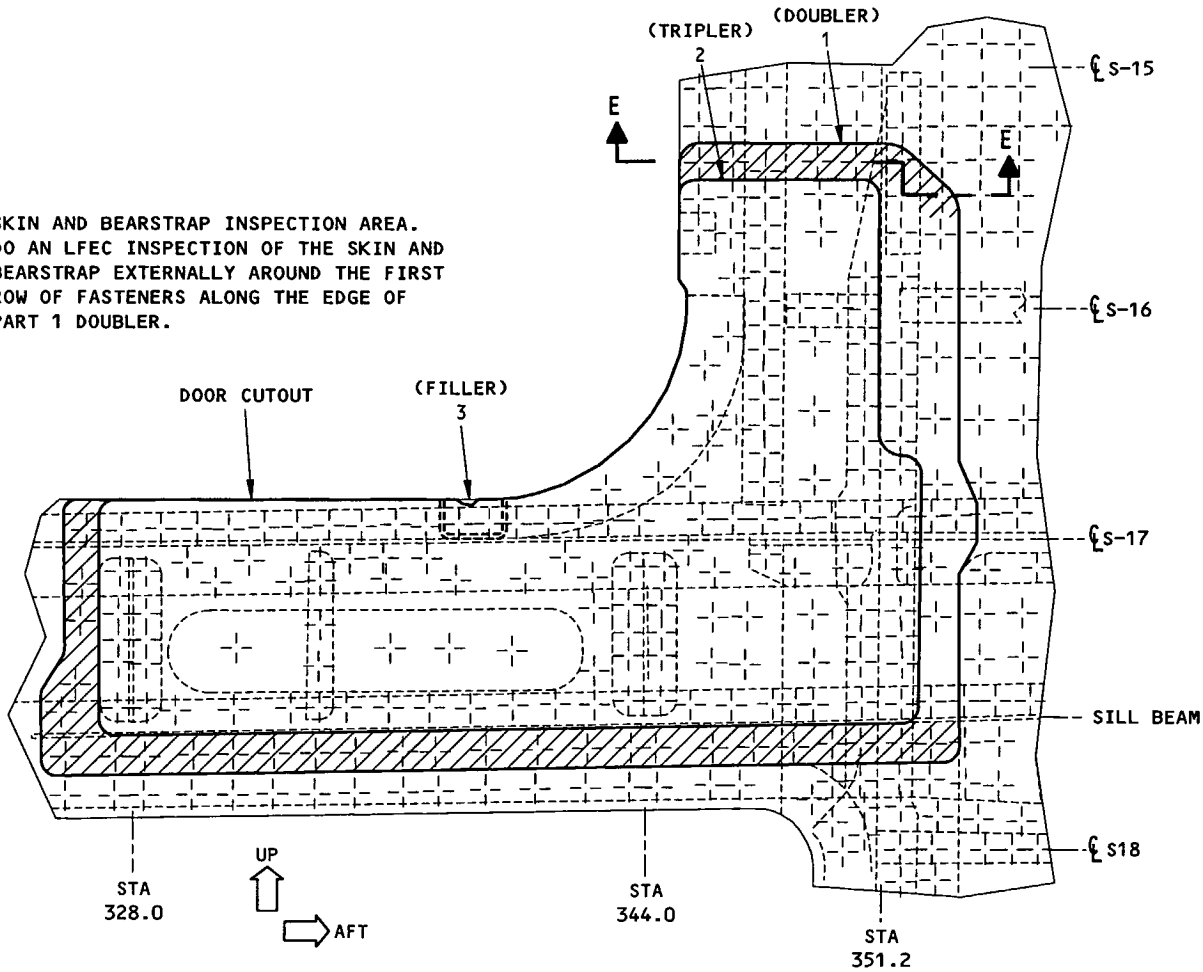

ALTERNATIVE B INSPECTION AREAS FOR DETAIL III
DETAIL VI

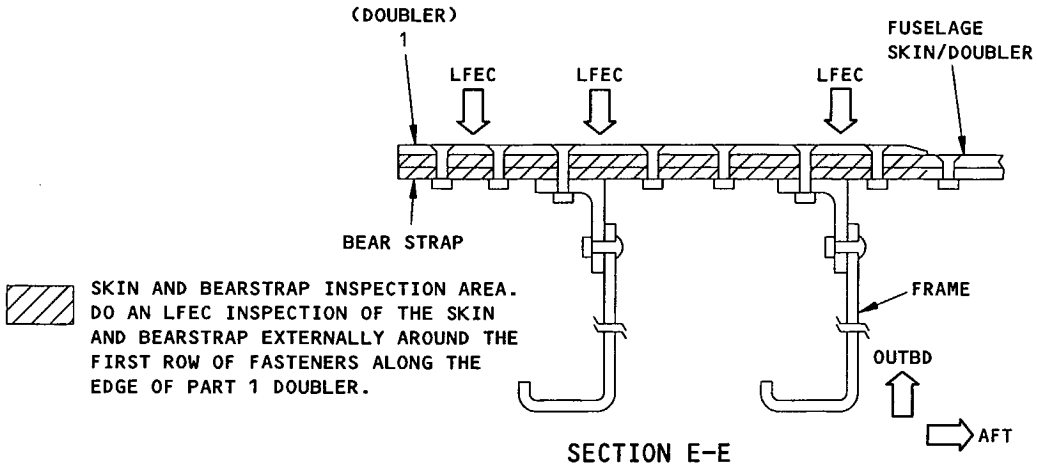

SECTION E-E

Skin, Doubler and Bear Strap Repair at Forward Entry Door Cutout Lower Aft Corner
Figure 52 (Sheet 11)

BOEING PROPRIETARY - Copyright © - Unpublished Work - See title page for details.

APPLICABILITY

THIS REPAIR IS APPLICABLE TO THE AIRSTAIR DOOR CUTOUT UPPER FORWARD CORNER THAT HAS DAMAGE AT ONE OR ALL OF THE PARTS THAT FOLLOW:

- BEAR STRAP,
- SKIN AND BONDED DOUBLER
- DO NOT USE THIS REPAIR UNTIL YOU HAVE SATISFIED THE INSPECTION REQUIREMENTS OF THE SB 737-53-1083, REVISION 4 OR LATER.
- DO NOT USE THIS REPAIR:
  - IF THE DAMAGE IS LARGER THAN THE PERMITTED CUTOUT. THE MAXIMUM PERMITTED DAMAGE IS SHOWN IN DETAIL I.
  - IF THERE IS DELAMINATION BETWEEN THE SKIN AND THE DOUBLER THAT CAN NOT BE CUTOUT AS SHOWN IN DETAIL I.
  - IF THE SUM OF ALL EXTERNAL DOUBLER REPAIRS DONE ON THE FUSELAGE WILL BE MORE THAN 8100 SQUARE INCHES. E

REPAIR INSTRUCTIONS

1. Remove the equipment, and the fasteners as necessary to gain access to the repair area.

WARNING: WEAR PROTECTIVE CLOTHING AND EYE PROTECTION WHEN YOU USE SOLID CARBON DIOXIDE (DRY ICE). MAKE SURE YOU HAVE SUFFICIENT VENTILATION AND DO NOT USE DRY ICE IN AN ENCLOSED SPACE. DRY ICE CAN INJURE YOUR SKIN OR CAUSE BREATHING PROBLEMS.

CAUTION: USE SPECIAL CARE TO CUT AND REMOVE THE DAMAGED PART OF THE BEAR STRAP AND/OR SKIN AND DOUBLER. DO NOT GOUGE, SCRATCH, OR BUCKLE THE STRUCTURE ADJACENT TO THE CUTOUT. IF YOU DAMAGE THE ADJACENT STRUCTURE MORE REPAIR WORK WILL BE NECESSARY.

2. Cold soak the area with solid carbon dioxide (dry ice) for approximately 30 minutes as necessary, before you use the wedges.
3. Carefully install nylon or hardwood wedges between the bear strap, skin and doubler, frame structure, or other structure as necessary in the repair area. Use sufficient wedges to gradually separate the parts and prevent buckling.
4. Use a thin steel sheet between the bear strap and skin and doubler, or frame structure, or other adjacent structure as required to prevent damage to the adjacent structure.
5. Carefully cut and remove the damaged part of the bear strap, and/or skin and bonded doubler. Refer to Detail II and Detail III.
6. If damage is on the skin or bonded doubler, trim out both layers together. Do not attempt to separate skin from the bonded doubler.
7. Remove the steel sheet.
8. Do a High Frequency Eddy Current (HFEC) inspection along the edge of the cutout. Make sure there are no cracks, corrosion or disbond between the bear strap, skin and bonded doubler. Refer to NDT Part 6, 51-00-00 Figure 4 for the HFEC procedure.
9. If there is no more damage, make the cutout larger by 0.04 inch.
10. Remove the wedges.
11. Do an HFEC inspection of all the production fastener holes where fasteners were removed in the repair area. Refer to NDT Part 6, 51-00-00 Figure 16 and 53-30-00 Figure 4.
12. Make the repair parts as given in the applicable details and tables.
13. Preform the repair parts to match the fuselage skin contour. Refer to SRM 51-20-1 for Sheet Metal Materials and SRM 51-70 for repair part surface smoothness.
14. Assemble the repair parts. See the applicable details.
15. Drill fastener holes. C
16. Remove the repair parts.
17. If necessary, install the wedges again and put the steel sheet back in position.
18. Remove all nicks, scratches, gouges, burrs, and sharp edges from the repair parts, the bear strap, and skin and bonded doubler. The edges of the repair parts, bearstrap, skin and bonded doubler that are common to the cutout, must have a surface smoothness of 63 microinches Ra or better. All other machined surfaces must have a surface smoothness of 125 microinches Ra or better.
19. Remove the steel sheet and wedges if they were installed at above step.
20. Apply a chemical conversion coating to the repair parts and the bare surfaces of the initial parts. Refer to SRM 51-10-2.
21. Apply one layer of BMS 10-79, Type II or III primer to the repair parts and the bare surfaces of the initial parts. Refer to SOPM 20-44-04.
22. Install repair washers in the countersink holes in the skin panels between the repair parts and the skin. Install them with BMS 5-95 sealant. Refer to SRM 51-30-8.
23. The maximum permitted gap between the mating surfaces is 0.010 inch before you install the fasteners.
24. Clean the mating surfaces of the initial and repair parts. Refer to SRM 51-10-1.

Skin, Doubler and Bear Strap Repair at Airstair Upper Forward Corner Cutout
Figure 53 (Sheet 1)

BOEING PROPRIETARY - Copyright © - Unpublished Work - See title page for details.

25. Assemble the repair parts with BMS 5-95 sealant on all of the mating surfaces and in all the gaps. Refer to SRM 51-20-4.
26. Install the fasteners within the squeeze-out life of the sealant. Refer to SRM 51-20-4. Fasteners that are not made of aluminum must be installed wet with BMS 5-95 sealant.
27. Retorque the hex drive bolts in less than the squeeze-out time for the sealant as given in the BMS 5-95 specification. Refer to SRM 51-30-4.
28. Apply a fillet seal along the edges of the repair parts.
29. Apply a layer of BMS 3-23 Type 2 corrosion inhibiting compound on the internal surface of the entire repair area. Refer to SRM 51-10-2.
30. Apply a finish to the external surface of the repair area. Refer to AMM 51-21.

NOTES

- THESE REPAIRS (DETAIL II AND III) ARE CATEGORY B REPAIRS. THE CATEGORY B REPAIR HAS FAA APPROVAL IF YOU DO THE SUPPLEMENTAL INSPECTIONS GIVEN IN TABLE IV. INCORPORATON OF THESE INSPECTION REQUIREMENTS INTO THE AIRPLANE'S MAINTENANCE PROGRAM SATISFIES THE DAMAGE TOLERANCE ASSESSMENT OF THE REPAIR SPECIFIED BY THE REPAIR ASSESSMENT PROGRAM. THIS ASSESSMENT CAN BE DONE AFTER YOU RELEASE THE AIRPLANE TO SERVICE. REFER TO SRM 51-00-6 FOR REPAIR CATEGORIES, DEFINITIONS AND GENERAL DATA ABOUT THE REPAIR ASSESSMENT PROGRAM. REFER TO DETAILS IV THROUGH VII AS APPLICABLE FOR INSPECTION AREAS.
- THESE REPAIRS (DETAIL II AND III) WILL HAVE AN EFFECT ON THE STRUCTURALLY SIGNIFICANT ITEM (SSI):
  - NUMBER F-14, BUT THE SUPPLEMENTAL INSPECTIONS GIVEN IN TABLE IV WILL MEET THE SSID EXTERNAL INSPECTION REQUIREMENTS FOR F-14A IN THE REPAIR AREA. HOWEVER, THE INTERNAL INSPECTION OF THE FRAME OUTER CHORD FOR F-14B IS STILL APPLICABLE.

  DO THE INTERNAL INSPECTION FOR F-14B, IF NECESSARY, AT THE SUBSEQUENT SUPPLEMENTAL STRUCTURAL INSPECTION DOCUMENT (SSID) INSPECTION ON THE AIRPLANE. REFER TO SRM 51-00-4, FIGURE 3 FOR THE APPLICABLE SSI DATA.
- ALL DIMENSIONS ARE IN INCHES, UNLESS SHOWN DIFFERENTLY.
- D = FASTENER DIAMETER
- T = REPAIR PART THICKNESS.
- USE A MINIMUM OF 2D EDGE MARGIN, UNLESS SHOWN DIFFERENTLY.
- KEEP A MINIMUM OF 0.5 INCH EXTERNAL RADIUS AND 2.0 INCHES INTERNAL RADIUS ON REPAIR PART CORNERS.
- CHAMFER ALL EDGES OF REPAIR PARTS NOT COMMON TO THE DOOR CUTOUT.
- WHEN YOU DRILL NEW FASTENER HOLES USE CARE NOT TO DRILL NEAR THE EDGE OF THE BEAR STRAP.
- WHEN YOU USE THIS REPAIR REFER TO:
  - AMM 51-21 FOR INTERIOR AND EXTERIOR FINISHES
  - AMM 51-31 FOR SEALS AND SEALING
  - NDT PART 6, 51-00-00, FIG.16, FOR HFEC ALUMINUM PART FASTENER HOLE INSPECTION
  - NDT PART 6, 53-30-00, FIG. 4, FOR HFEC COUNTERSINK INSPECTION OF ALUMINUM PARTS
  - SOPM 20-44-04 FOR APPLICATION OF URETHANE COMPATIBLE PRIMER
  - SRM 51-00-4 FOR A LIST OF STRUCTURALLY SIGNIFICANT ITEMS
  - SRM 51-00-6 FOR STRUCTURAL REPAIR DEFINITIONS
  - SRM 51-10-1 FOR INSPECTION AND REMOVAL OF DAMAGE
  - SRM 51-10-2 FOR PROTECTIVE TREATMENT OF METAL
  - SRM 51-10-6 FOR CORROSION REMOVAL AND SURFACE FINISHING REQUIREMENTS
  - SRM 51-20-1 FOR SHEET METAL MATERIALS
  - SRM 51-20-4 FOR REPAIR SEALING
  - SRM 51-30 FOR FASTENER CODE REMOVAL AND INSTALLATION, HOLE SIZES AND EDGE MARGINS
  - SRM 51-30-8 FOR COUNTERSINKING OF HOLES AND USE OF COUNTERSINK REPAIR WASHERS
  - SRM 51-70 FOR AERODYNAMIC SMOOTHNESS REQUIREMENTS.

Skin, Doubler and Bear Strap Repair at Airstair Cutout Upper Forward Corner
Figure 53 (Sheet 2)

BOEING PROPRIETARY - Copyright © - Unpublished Work - See title page for details.

NOTES (CONTINUED)

[A] THE THICKNESS OF THE PART 3 FILLER MUST BE EQUAL TO THE TOTAL THICKNESS OF THE CUTOUT (BEAR STRAP AND/OR SKIN AND BONDED DOUBLER).

[B] THIS DETAIL SHOWS THE MAXIMUM PERMITTED CUTOUT. IF THE DAMAGE CANNOT BE REMOVED WITHIN THIS CUTOUT, DO NOT USE THIS REPAIR.

[C] MAKE SURE THE DEPTH OF THE COUNTERSINK WILL NOT BE MORE THAN 80 PERCENT OF THE REPAIR PART THICKNESS, WHEN YOU USE COUNTERSINK FASTENERS. USE PROTRUDING HEAD FASTENERS TO PREVENT COUNTERSINK DEPTHS LARGER THAN 80 PERCENT OF THE SHEET THICKNESS.

[D] IF THE AIRPLANE HAS LESS THAN 66,000 FLIGHT CYCLES, THE INSPECTION THRESHOLD IS THE EARLIER OF:

- THE INITIAL SCHEDULED INSPECTION AS GIVEN IN THE OPERATOR'S REPAIR ASSESSMENT PROGRAM (RAP)
- 66,000 FLIGHT CYCLES.

IF THE AIRPLANE HAS MORE THAN 66,000 FLIGHT CYCLES AND THE INITIAL SCHEDULED SUPPLEMENTAL STRUCTURAL INSPECTION DOCUMENT (SSID) INSPECTION HAS BEEN PERFORMED, THE INSPECTION THRESHOLD IS:

- THE NEXT SCHEDULED SSID INSPECTION FOR THE STRUCTURALLY SIGNIFICANT ITEM F-14A IN THE REPAIRED AREA.

[E] IF THE SUM OF ALL EXTERNAL DOUBLER REPAIRS DONE ON THE FUSELAGE WILL BE MORE THAN 8100 SQUARE INCHES, CONTACT THE BOEING COMPANY FOR AN AERODYNAMIC ANALYSIS.

FASTENER SYMBOLS

REFERENCE FASTENER LOCATION.

INITIAL FASTENER LOCATION. SEE TABLE III FOR THE TYPE OF FASTENER INSTALLATION.

NEW FASTENER LOCATION. INSTALL A BACB30FN6A OR BACB30FM6A HEX DRIVE BOLT WITH A BACC30M6 COLLAR.

REPAIR MATERIALS FOR SKIN, BONDED DOUBLER AND BEAR STRAP CRACKS PARTS

PARTS		QTY	MATERIAL
1	DOUBLER	1	0.100 INCH THICK, CLAD 2024-T3
2	TRIPLER	1	0.125 INCH THICK FOR DETAIL II ONLY, 0.160 INCH THICK FOR DETAIL III ONLY, CLAD 2024-T3
3	FILLER	1	CLAD 2024-T3 [A]

TABLE I

REPAIR MATERIALS FOR SKIN AND BONDED DOUBLER OR BEAR STRAP CRACKS PARTS

PARTS		QTY	MATERIAL
1	DOUBLER	1	0.063 INCH THICK FOR DETAIL II ONLY, 0.080 INCH THICK FOR DETAIL III ONLY, CLAD 2024-T3
2	TRIPLER	1	0.063 INCH THICK FOR DETAIL II ONLY, 0.080 INCH THICK FOR DETAIL III ONLY, CLAD 2024-T3
3	FILLER	1	CLAD 2024-T3 [A]

TABLE II

REPLACEMENT FASTENER AT INITIAL FASTENER LOCATIONS FOR FRAME, STRINGER AND BEAR STRAP

INITIAL FASTENER	REPLACEMENT FASTENER
DOUBLE COUNTERSINK RIVET	DOUBLE COUNTERSINK BACR15CE6D
6/32 INCH DIAMETER RIVET	BACB30KF(6)A OR BACB30KK(6)A (OPTIONAL) WITH A BACC30R COLLAR
COUNTERSINK SHEAR HEAD HEX DRIVE BOLT	BACB30FQ(6)A OR BACB30FP(6)A (OPTIONAL) WITH A BACC30M COLLAR.
5/32 INCH DIAMETER RIVET	BACB30FN(6)A OR BACB30FM(6)A WITH A BACC30M COLLAR

TABLE III

Skin, Doubler and Bear Strap Repair at Airstair Cutout Upper Forward Corner
Figure 53 (Sheet 3)

BOEING PROPRIETARY - Copyright © - Unpublished Work - See title page for details.

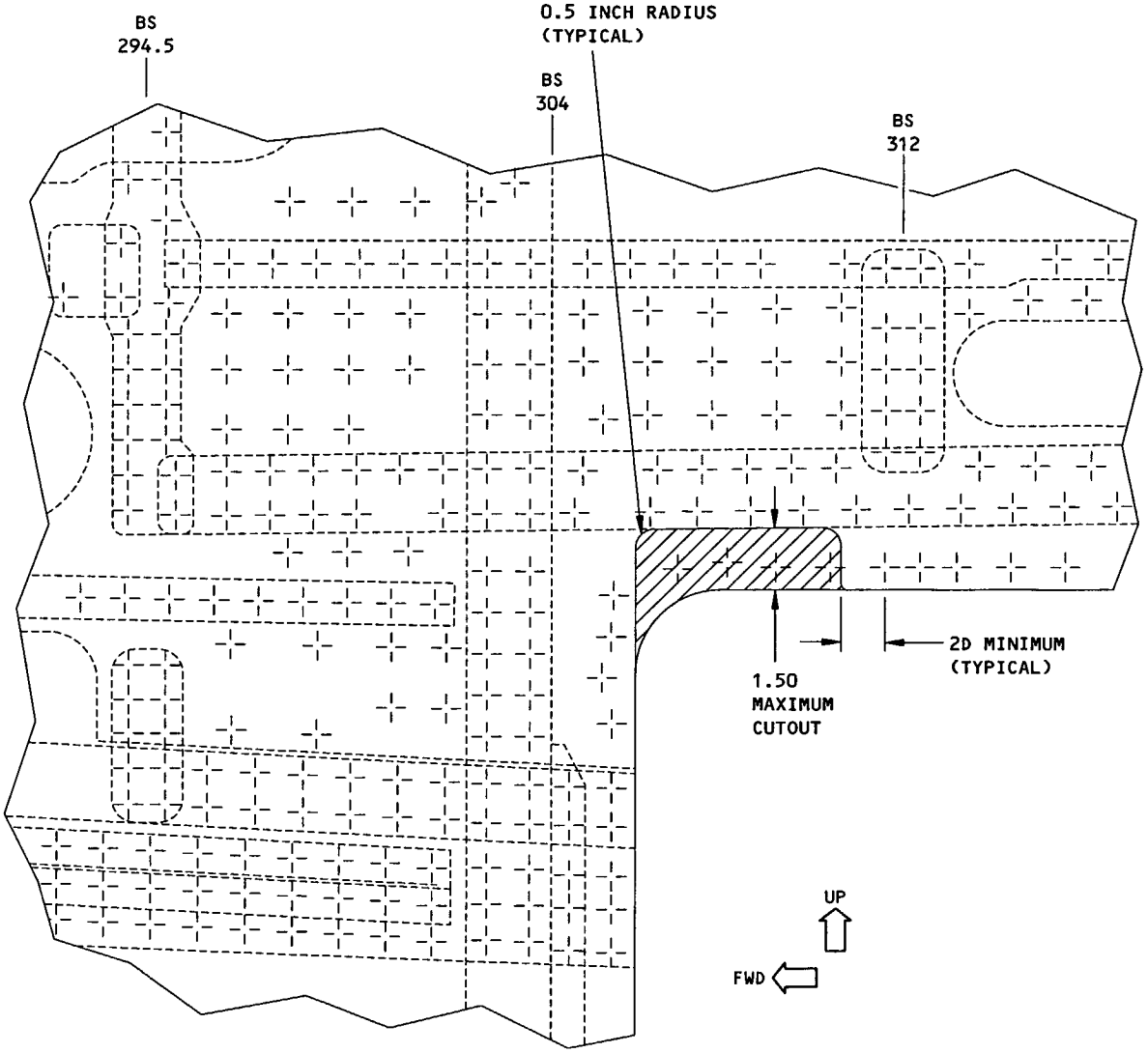

PERMITTED MAXIMUM DAMAGE CUTOUT AREA

DETAIL I [B]

Skin, Doubler and Bear Strap Repair at Airstair Cutout Upper Forward Corner
Figure 53 (Sheet 4)

BOEING PROPRIETARY - Copyright © - Unpublished Work - See title page for details.

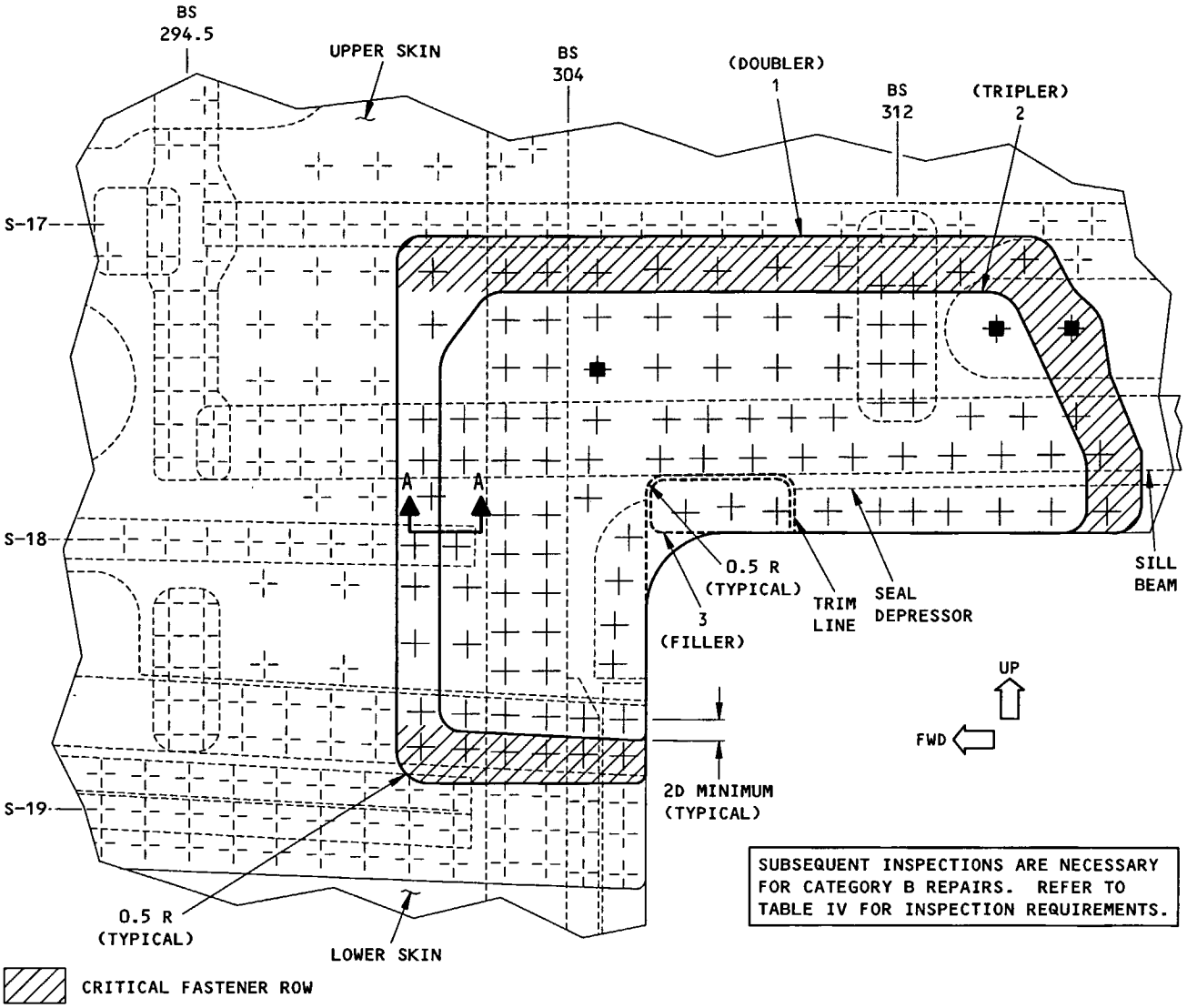

SUBSEQUENT INSPECTIONS ARE NECESSARY FOR CATEGORY B REPAIRS. REFER TO TABLE IV FOR INSPECTION REQUIREMENTS.

PASSENGER AIRPLANE AIRSTAIR DOOR CUTOUT REPAIR
DETAIL II

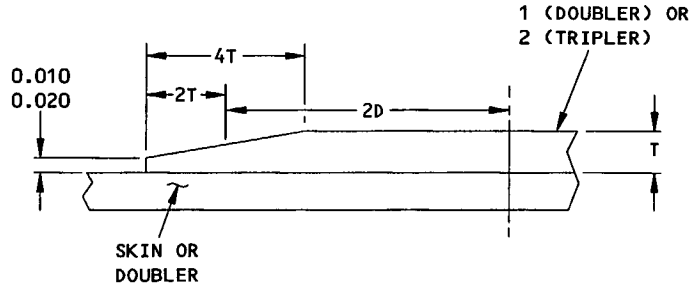

TYPICAL EDGE CHAMFERING TO ALL EDGES EXCEPT FOR DOOR CUTOUT
SECTION A-A

Skin, Doubler and Bear Strap Repair at Airstair Cutout Upper Forward Corner
Figure 53 (Sheet 5)

BOEING PROPRIETARY - Copyright © - Unpublished Work - See title page for details.

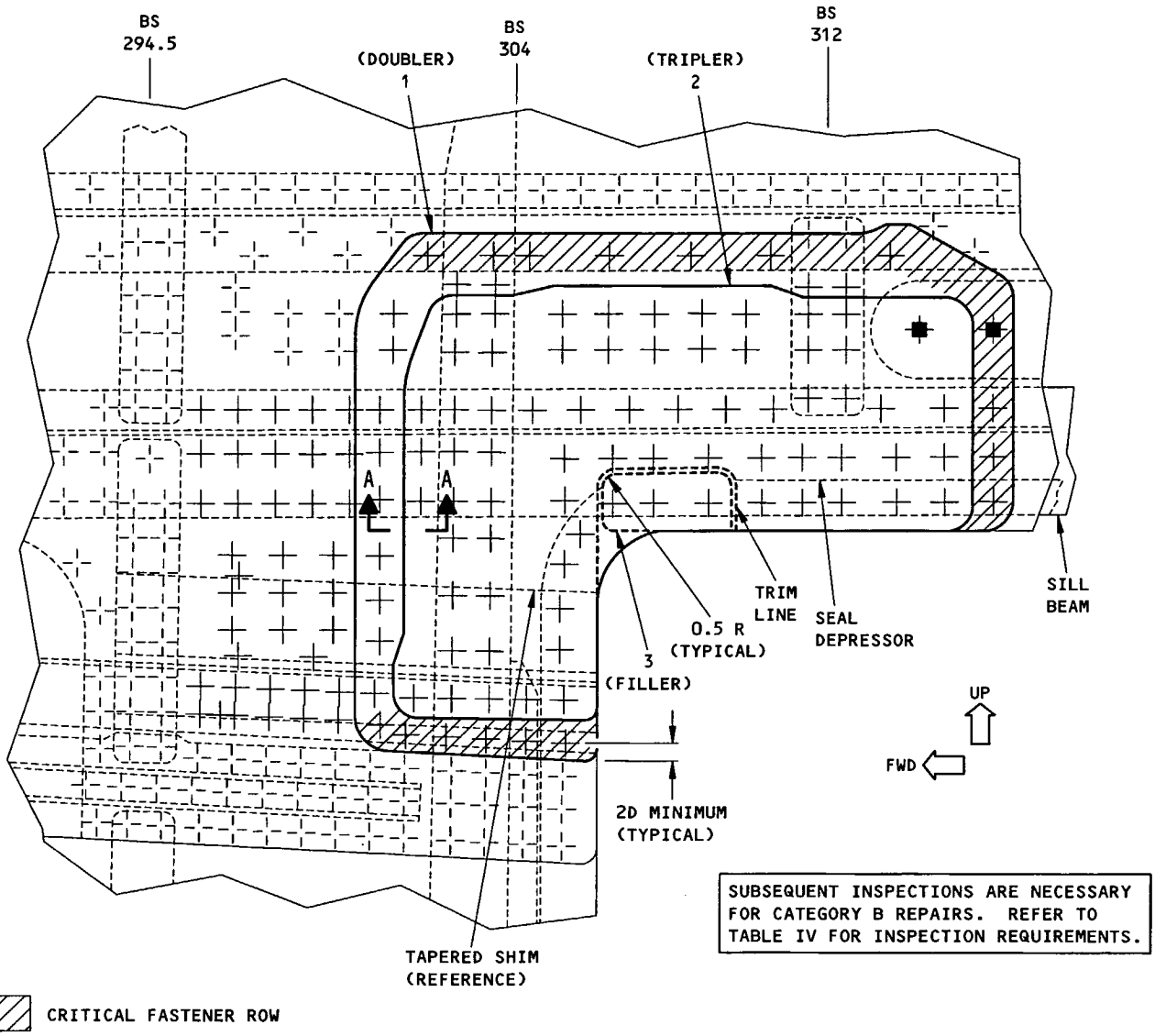

CARGO AIRPLANE AIRSTAIR DOOR CUTOUT REPAIR
DETAIL III

Skin, Doubler and Bear Strap Repair at Airstair Cutout Upper Forward Corner
Figure 53 (Sheet 6)

BOEING PROPRIETARY - Copyright © - Unpublished Work - See title page for details.

CATEGORY B REPAIR AND SSI F-14A INSPECTION REQUIREMENTS				
INSPECTION THRESHOLD	ALTERNATIVE	REPEAT INSPECTION ALTERNATIVES		
		METHOD	INTERVAL	REFERENCE
D	A	MEDIUM FREQUENCY EDDY CURRENT (MFEC)	24,000 FLIGHT CYCLES	737 NDT, PART 6, 53-30-00, FIGURE 6
		HIGH FREQUENCY EDDY CURRENT (HFEC)		737 NDT, PART 6, 51-00-00, FIGURE 4 OR 24
		GENERAL VISUAL (SURVEILLANCE) INSPECTION		
	B	LOW FREQUENCY EDDY CURRENT (LFEC)	4,000 FLIGHT CYCLES	737 NDT, PART 6, 53-30-00, FIGURE 5

NOTE: USE ONE OF THE TWO ALTERNATIVES:

- ALTERNATIVE A IS FOR INTERNAL INSPECTION OF THE SKIN, BEARSTRAP, FRAME AND SILL OUTER CHORD. REFER TO DETAIL IV AND VI AS APPLICABLE FOR INSPECTION AREAS. HOWEVER, THE ALTERNATIVE A IS NOT APPLICABLE IF THE PART 1 DOUBLER CRITICAL FASTENER ROW ENDS ON A STRINGER OR INTERCOSTAL.
- ALTERNATIVE B IS FOR EXTERNAL INSPECTION OF THE SKIN AND BEARSTRAP THROUGH THE PART 1 DOUBLER. REFER TO DETAIL V AND VII AS APPLICABLE FOR INSPECTION AREAS.

TABLE IV

Skin, Doubler and Bear Strap Repair at Airstair Cutout Upper Forward Corner
Figure 53 (Sheet 7)

BOEING PROPRIETARY - Copyright © - Unpublished Work - See title page for details.

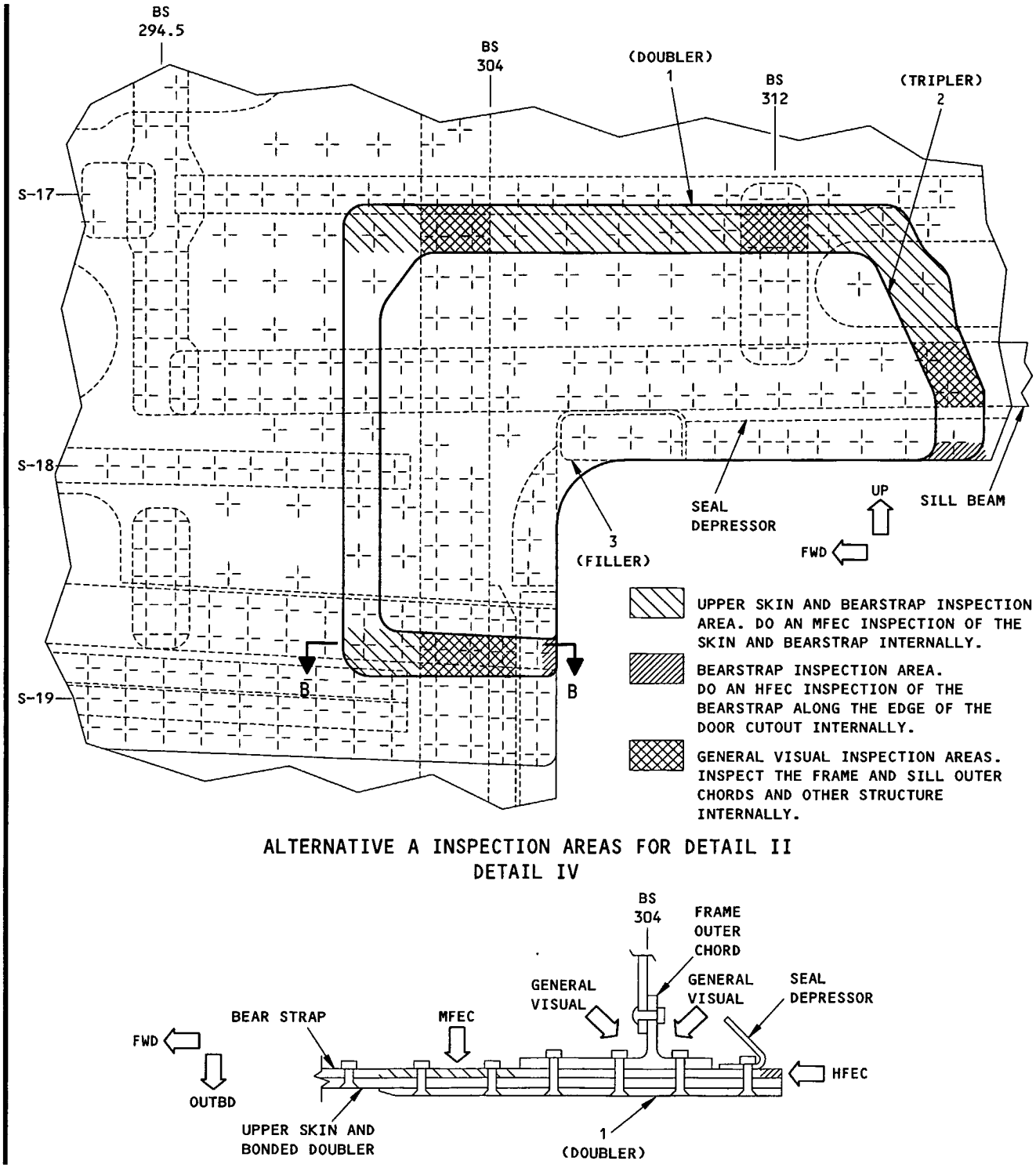

Skin, Doubler and Bear Strap Repair at Airstair Cutout Upper Forward Corner
Figure 53 (Sheet 8)

BOEING PROPRIETARY - Copyright © - Unpublished Work - See title page for details.

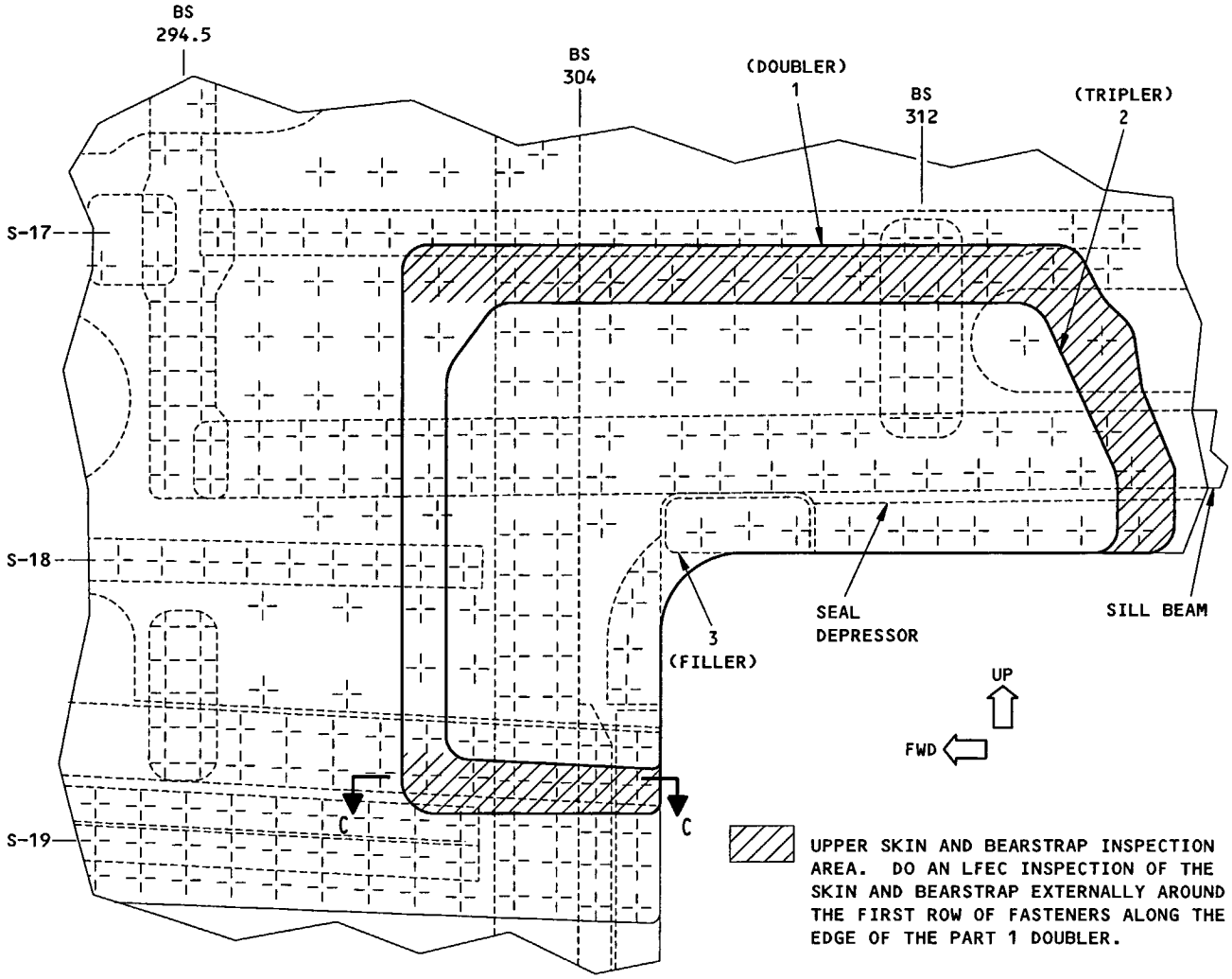

ALTERNATIVE B INSPECTION AREAS FOR DETAIL II
DETAIL V

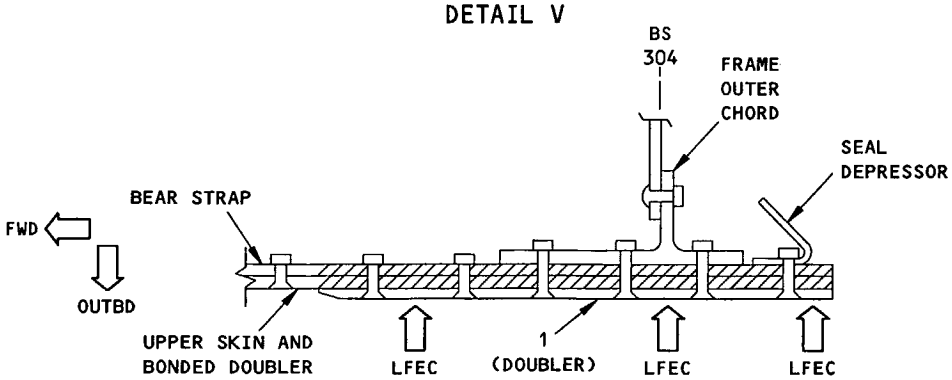

SECTION C-C

Skin, Doubler and Bear Strap Repair at Airstair Cutout Upper Forward Corner
Figure 53 (Sheet 9)

BOEING PROPRIETARY - Copyright © - Unpublished Work - See title page for details.

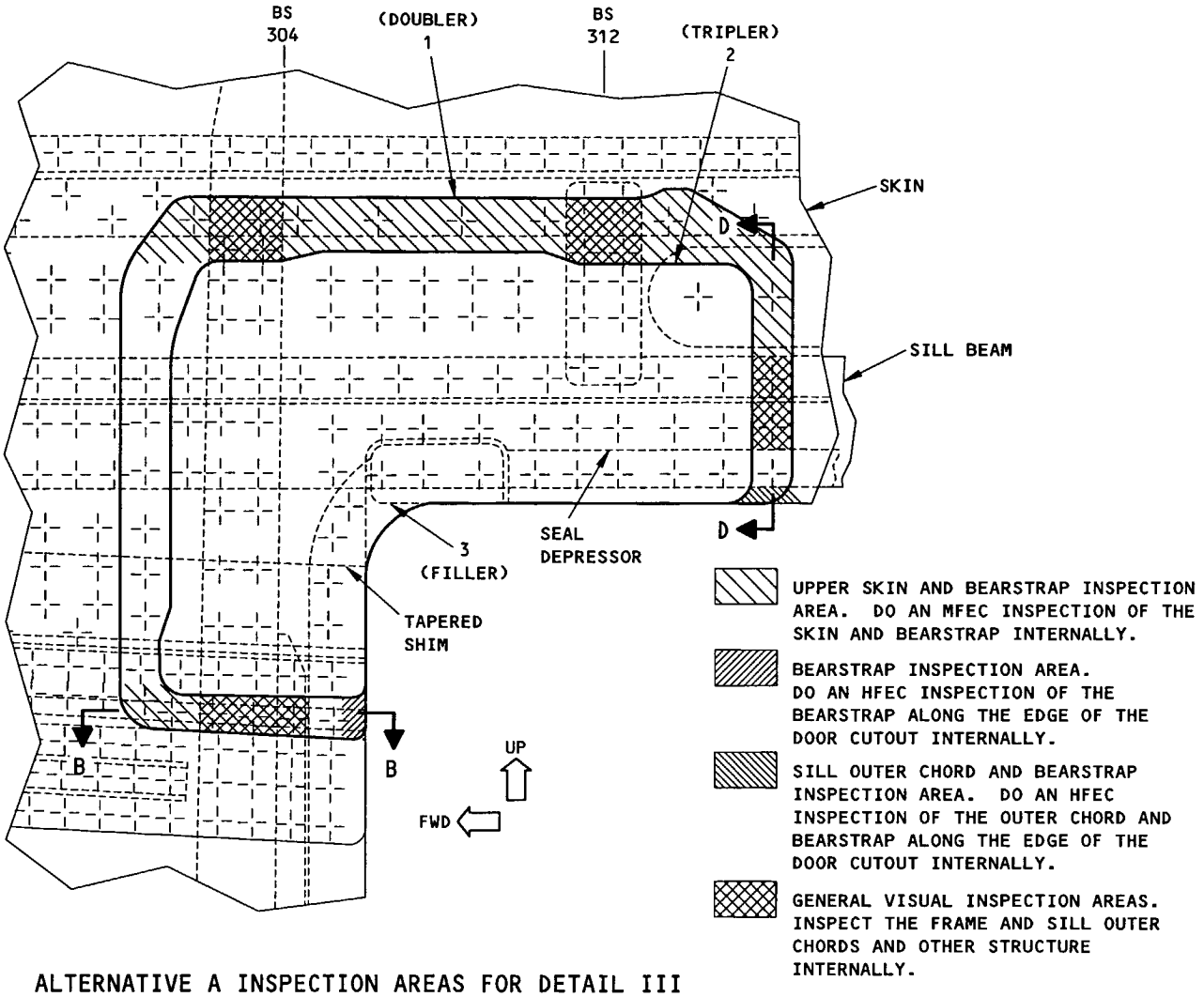

ALTERNATIVE A INSPECTION AREAS FOR DETAIL III
DETAIL VI

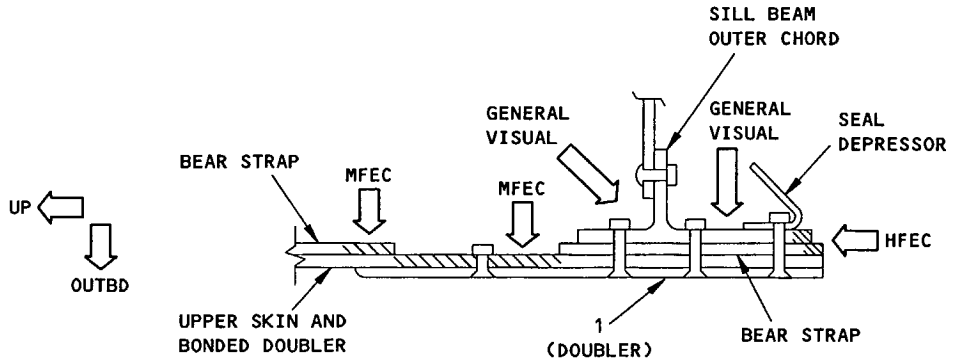

(ROTATED 90 DEGREES)
SECTION D-D

Skin, Doubler and Bear Strap Repair at Airstair Cutout Upper Forward Corner
Figure 53 (Sheet 10)

BOEING PROPRIETARY - Copyright © - Unpublished Work - See title page for details.

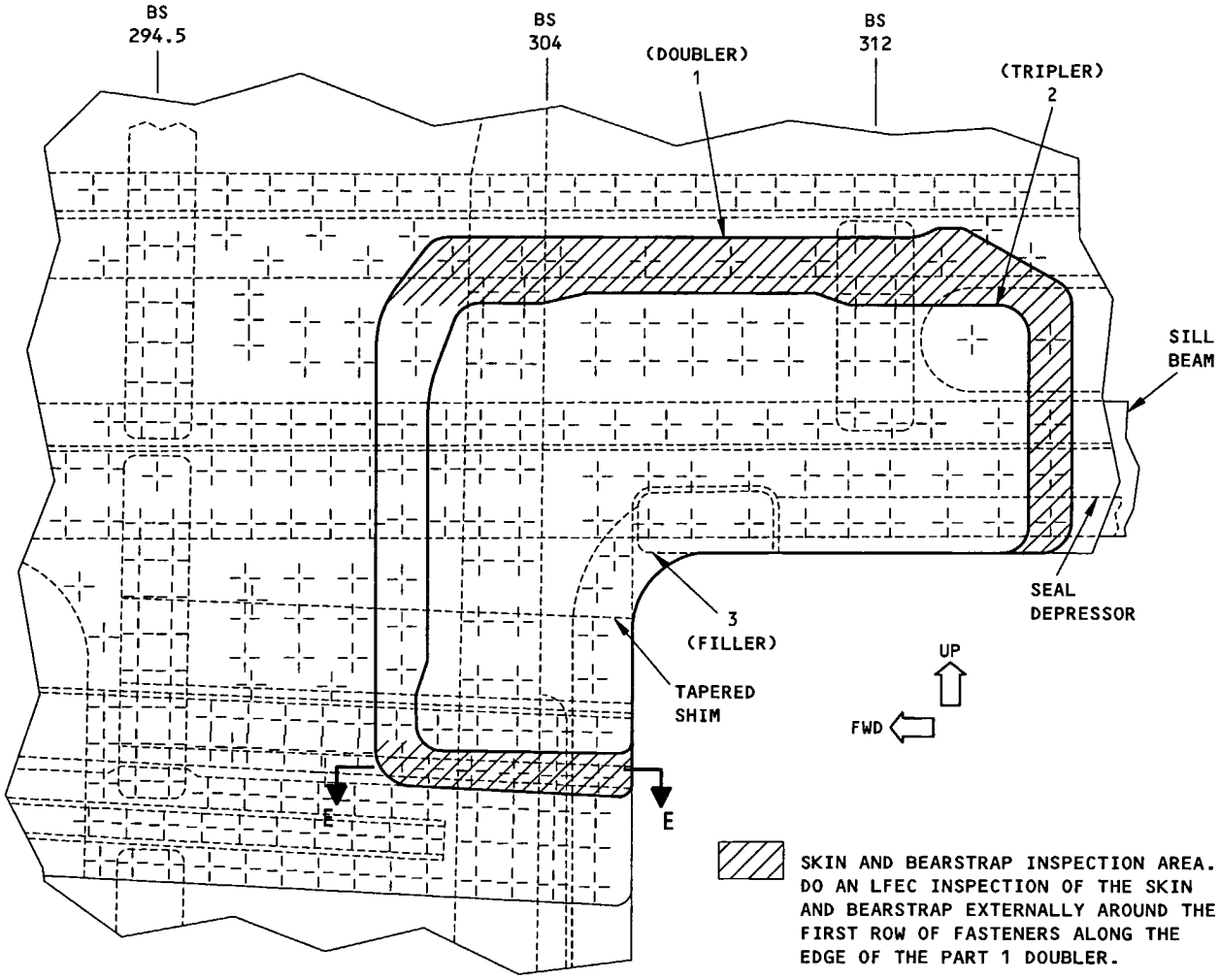

ALTERNATIVE B INSPECTION AREAS FOR DETAIL III
DETAIL VII

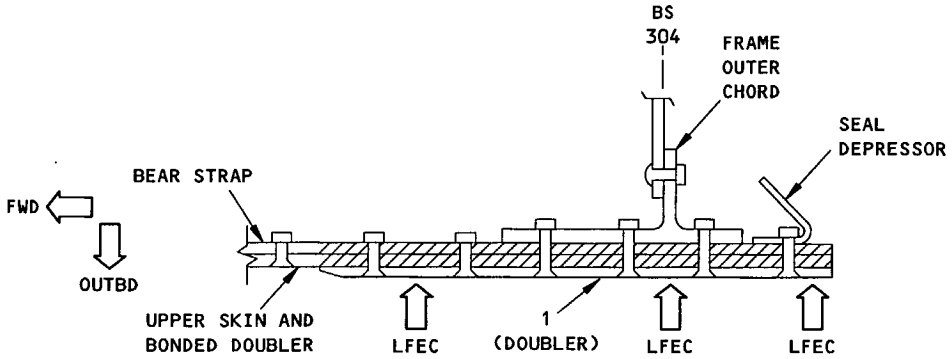

SECTION E-E

Skin, Doubler and Bear Strap Repair at Airstair Cutout Upper Forward Corner
Figure 53 (Sheet 11)

BOEING PROPRIETARY - Copyright © - Unpublished Work - See title page for details.

SEALING OF FUSELAGE SKIN REPAIRS AND COLD-BONDED FUSELAGE STRUCTURE FOR PROTECTION AGAINST CORROSION

1. General

A. A metal-to-metal bonding system is used to supplement and improve the fatigue resistance of riveted joints in fuselage structure. This bonding process is used mainly on the longitudinal lap splices of fuselage skins, in doors, on certain small skin reinforcing doublers and on some passenger cabin window forgings. The metal-bonding system (to BMS 5-10) used for these joints employs an adhesive which cures at room temperature.

B. Over an extended period of time, exposure to moisture or high humidity can cause deterioration of the cold bonding adhesive, with subsequent delamination of the joints, leaving the affected areas vulnerable to attack by corrosive agents.

C. Joint integrity can be maintained however, by the application of a water displacing corrosion inhibiting compound into all possible moisture-entry points, both externally and internally. Possible seepage points far removed from a bond line should be considered, with special emphasis being placed on fastener heads on the internal surfaces of these joints.

NOTE: Where delamination of a bonded joint has occurred or where sealants have been broken or deteriorated, the application of water displacing corrosion inhibiting will provide protection against corrosion and increase the fatigue life of the joint. Replacement of fillet seals is not recommended until after the application of the corrosion inhibitor. Joint edges and surfaces which sealant contacts should be cleaned with one of the solvents recommended in 51-10-2 prior to sealant application.

The use of fillet seals, only after the application of water displacing corrosion inhibiting compound, is recommended in areas where the joint is vulnerable to corrosive contaminants.

D. For details on seals and sealing, refer to Maintenance Manual 51-31-0.

2. Sealing of Cold-Bonded Joints

A. Sealant applied to painted surfaces will be dislodged if painted finish is subsequently stripped. Resealing will then be necessary.

B. Surfaces should be clean and dry before applying sealant.

C. One sealant may be applied over another without allowing first applied sealant to cure.

D. External seals may be painted immediately after application.

E. Do not use cleaning fluids on newly applied sealant. Sealant must be fully cured to withstand these fluids.

F. The airplane should not be flown until sealant has cured tack free.

3. Fastener Sealing Requirements

A. Seal all fasteners in cold-bonded joints and those within a minimum distance of 5 inches from the joint boundary.

B. Seal all fasteners which pass through a nonbonded component and a cold-bonded joint (doublers, door reinforcing straps, frame chords, equipment or service pans).

C. Where component edges are sealed against moisture, seal all attaching fasteners in the component within a minimum distance of 5 inches from the joint boundary.

D. Where component edges are not sealed against moisture, fillet-seal edges of component crossing the bonded joint and for a minimum distance of 5 inches from the joint boundary. Fillet seals may terminate at any existing sealant installation closer than 5 inches.

NOTE: Newly applied fillet seal must join and merge with existing fillet seal.

E. Seal all fasteners within the sealant boundaries of any component.

F. Brush marks in the sealant which expose the fastener or structure are permissible providing the fastener to structure joint line is not exposed and there are no visible pin holes (bubbles) at the joint line. Sealant may be applied over the entire surface of the fastener.

4. Sealing Procedure for Cold-Bonded Joints

A. Clean affected area as detailed in 51-40-5, par. 6.

B. Apply sealant as detailed in 51-40-5, par. 6. See Fig. 3 for the specific areas to be sealed for maximum protection. See Fig. 1 and 2 for sealants, usage and cure times. For sealing index and requirements, refer to Maintenance Manual 51-31-0.

C. Paint all sealed areas as required by 51-21-0 of the Maintenance Manual.

5. Faying Surface Sealing for Fuselage Skins

A. All skin repairs made to the pressurized section of the fuselage must be sealed to prevent the loss of cabin pressure and the seepage of moisture and other contaminants between the faying surfaces of the skins. All bonded metal structural repairs must be sealed as described in 51-40-5. All nonbonded "external" repairs to fuselage skins must be made with a faying surface seal as described below. After installation, seal against moisture and contamination as detailed in 51-40-5.

B. Sealing Procedure

(1) Clean repair parts and existing structure and make a faying surface seal as follows:

(a) Preliminary cleaning can be accomplished using a bristle brush or a cloth and Fuller TL-4119, stripper and cleaner, a methyl ethyl ketone or an equivalent solvent. Wipe off all solvent (while still wet) using a clean cloth.

(b) Using new or laundered white absorbent material, repeat cleaning operation until affected areas are thoroughly clean.

(c) Remove all traces of solvent using a supply of oil and water-free air.

(d) Moisten a clean cloth with the cleaning solvent and wipe clean the faying surfaces. Wipe dry.

(2) Alodine repair parts and bare or cut edges of structure as detailed in 51-10-2.

(3) Apply a coat of corrosion inhibiting adhesive primer to the faying surfaces of the joint as described in 51-40-5.

(4) Make a faying surface seal as follows:

(a) Apply a thin, uniform, continuous coating of sealant to the faying surface of one of the components. (The sealant should be thick enough to completely cover the surface, but thin enough to minimize the size of the edge bead formed on assembly of the joint. See par. (4)(b) following.) The recommended thickness is between 0.005 and 0.015 inch.

(b) Assemble the joint ensuring that the sealant completely fills the space between the faying surfaces and that a small continuous bead of sealant has extruded at the edge of the joint.

(c) Fair the extruded sealant to form a continuous, smooth fillet, approximately 0.06 inch deep, along the joint, refer to Maintenance Manual 51-31-0, Fig. 201.

NOTE: This fillet is necessary to assure adequate sealant contact with fillet seals applied later.

(d) Install all fasteners (if possible) within the application time or squeeze-out time of the sealant. If permanent fasteners cannot be installed within the required time, temporary fasteners (e.g., bolts and nuts, cleco fasteners, etc.) should be installed in each fastener hole to hold the faying surfaces together until permanent fasteners are installed.

(e) Install a permanent fastener immediately after each individual temporary fastener is removed. Coat the fastener or hole with sealant when fasteners are to be sealed. The maximum allowable separation of the faying surfaces at the shank of all permanent fasteners is 0.004.

(f) Seal all cut edges, the junction of repair parts with the main structure and the fasteners as detailed in 51-40-5.

(g) Apply a coat of BMS 10-11, type 1 (MIL-P-23377) primer over the sealant.

NOTE: This primer coat may be applied immediately after completing the sealing operation.

6. Corrosion Protection for Fasteners Installed in Magnesium Components

A. Install all repair fasteners in the forward galley door reveal upper corner fittings and the mating structure with wet sealant (PR 1436G) for protection against corrosion (Fig. 1).

TYPE OF APPLICATION					SEALANT COLOR
INJECTION INTO VOIDS OR WET FASTENER INSTALLATION	FILLET [C]	FASTENER INTERNAL HEAD AND SEALANT BLEED HOLES		FAYING SURFACE [C] [D]	
		BRUSH	SPRAY		
PR1436G-A1/2 -A2 [A]	PR1436G-B1/2 -B2 [A]	PR1436G-A1/2 -A2 [A]	PR1436G-E2 [A]	PR1436G B-2 [A] PR1436G TYPE I	ALUMINIZED
PR1431G TYPE I [A] [B]	–	–	–	PR1431G TYPE I	YELLOW-GREEN
–	PRO-SEAL 890-B1/2 -B2	PRO-SEAL 890-A1/2 -A2	–	–	BLACK
–	3C-414-B2	3C-414-B2 (THINNED 12% WITH MEK)	–	3C414-B2	GRAY
–	–	EC5922	EC5922	–	TRANSPARENT

RECOMMENDED SEALANTS
TABLE I

BOEING PART NUMBER	VENDOR PART NUMBER	VENDOR
	PR1436G OR PR1431G TYPE I	PRODUCTS RESEARCH AND CHEMICAL CORP. 2919 EMPIRE AVE. BURBANK, CALIF. 91504
BMS 5-79	3C-414	CHURCHILL CHEMICAL CORP. 3137 E. 26TH ST. LOS ANGELES, CALIF. 90023
BMS 5-26	PRO-SEAL 890	COAST PRO-SEAL AND MFG. CO. 19451 SUSANA RD. COMPTON, CALIF. 90221
	EC 5922	MINNESOTA MINING AND MFG. CO. 3M CENTER ST. PAUL, MINNESOTA 55101

VENDOR INFORMATION
TABLE II

NOTES

[A] THE PR1431G AND PR1436G SEALANTS CONTAIN CHROMATE AND PROVIDE BETTER CORROSION PROTECTION THAN THE OTHER SEALANTS LISTED.

[B] STORAGE LIFE OF SEALANT PR1431G IS ABOUT 6 MONTHS WHEN STORED AT 40°F AND ABOUT 3 MONTHS WHEN STORED AT 80° F.

[C] SEE FIGURE 2 FOR SEALANT CURE PROPERTIES.

[D] USE OF SEALANTS OTHER THAN THOSE LISTED MAY RESULT IN REDUCED REPAIR SERVICE LIFE.

Sealants and Associated Materials
Figure 1

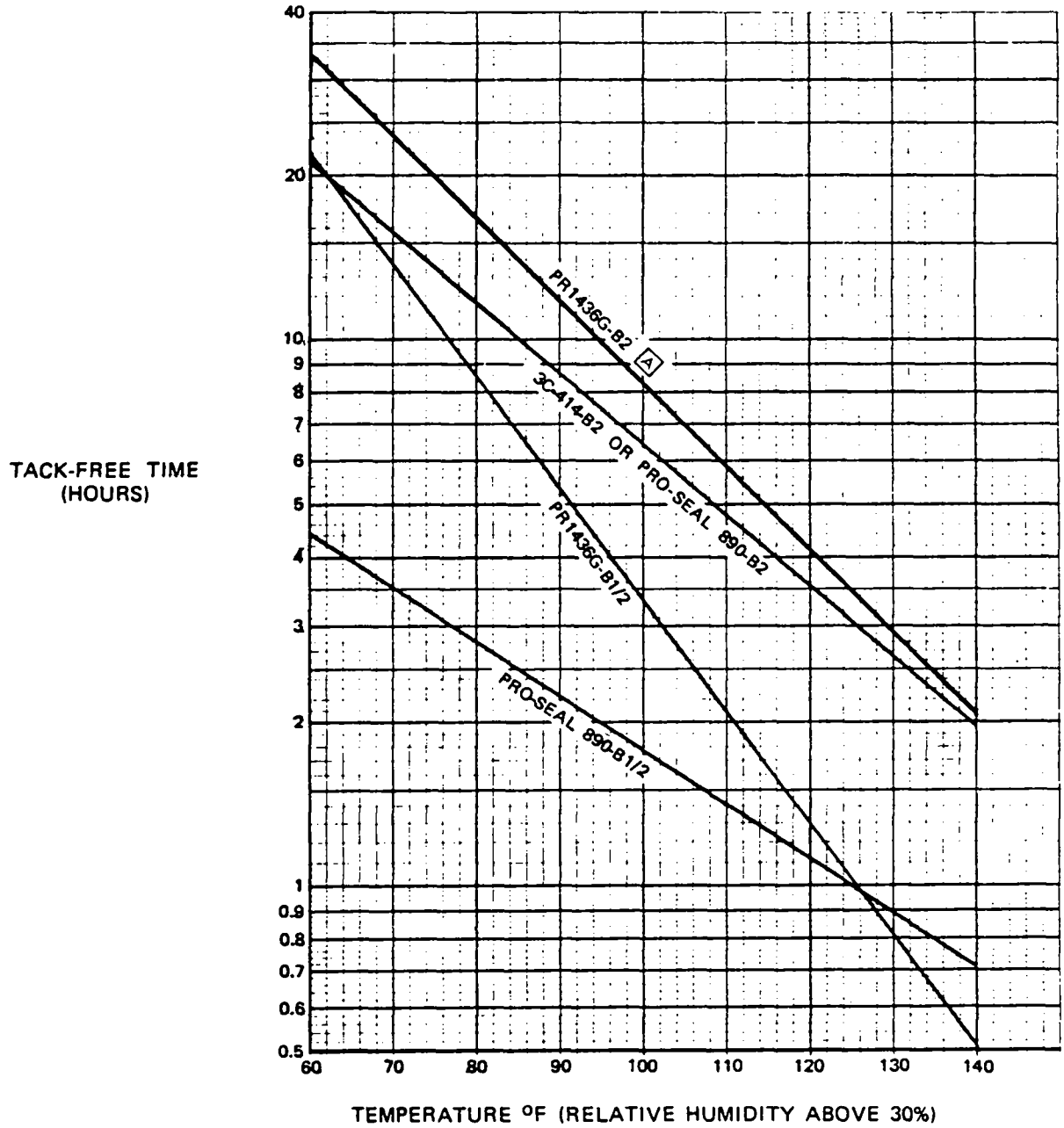

NOTE

A FIRST 24 HOURS OF CURING IS TO BE AT AMBIENT TEMPERATURE TO PRECLUDE THE FORMATION OF BUBBLES IN THE SEALANT.

Cure Properties for Fillet and Faying Surface Sealants
Figure 2

LOCATION TO BE SEALED
Aft entry door structure
Aft galley door structure
Main cargo door lap joints at S-10 and S-14; seal internally and externally
All passenger cabin window frames; seal as shown for window frames at BS 917 and 937 [A]
All lap joints BS 178 to 1016...except S-25R, BS 827 to 879.7 (737-100). BS 794.3 to 847 (737-200) and S-26R, BS 420 to 472.4 (737-100), BS 440 to 492.4 (737-200); seal internally and externally.
Lap joints at S-25R, BS 827 to 879.7 (737-100), BS 794.3 to 847 (737-200) and S-26R, BS 420 to 472.4 (737-100), BS 440 to 492.4 (737-200); seal externally only.
Emergency escape light doublers
External power receptacle doubler
Stall warning system doubler
Pitot-static system doublers
Window frames, BS 917 and 937, adjacent door strap and Stringers 11 and 13 L and R
Aft cargo door structure

NOTE

[A] FOR AIRPLANES:
LH 19013 THRU 19023

- AREAS INDICATED REQUIRE SEALING OR LPS-3 APPLICATION ON COLD BONDED STRUCTURES IN ACCORDANCE WITH THE BOEING COMPANY SERVICE BULLETIN 53-1017, REVISION 1, DATED JULY 20, 1972.

Specific Sealing Areas of Fuselage Structure
Figure 3

ATTACH FITTINGS

1. General

   A. Attach fittings are identified in sections 53-10 and 53-20.

   B. Attach fittings are normally replacement items.

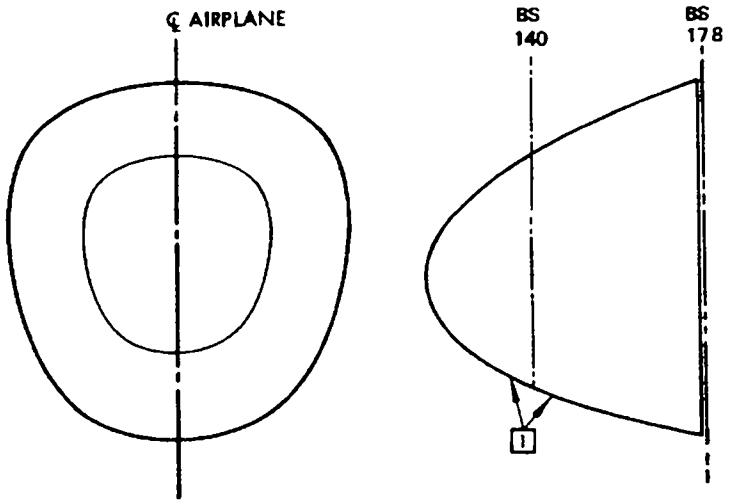

ITEM	MATERIAL	REPAIR FIG. NO.
1	REFER TO SRM 53-50-4, FIG. 1	53-50-4

Radome - Material Identification
Figure 1

ITEM	MATERIAL	REPAIR FIG. NO.
1	PLASTIC, GLASS FABRIC REINFORCED EPOXY SANDWICH WITH HONEYCOMB CORE	51-40-9 FIG. 1
2	PLASTIC, GLASS FABRIC REINFORCED PHENOLIC SANDWICH WITH HONEYCOMB CORE	51-40-9 FIG. 1
3	0.040 CLAD 2024-T4	
4	0.032 AISI302 SHT. (ANNEALED PER MIL-S-5059) COMP 301 SURF. COND 2D	

NOTES

A FOR CUM LINE NUMBERS: 1 THRU 99

B FOR CUM LINE NUMBERS: 100 AND ON

C FOR CUM LINE NUMBERS: 1 THRU 86, 88 THRU 98

D FOR CUM LINE NUMBERS: 87, 99 AND ON

E FOR CUM LINE NUMBERS: 1 THRU 98

F FOR CUM LINE NUMBERS: 99 AND ON

G FOR CUM LINE NUMBERS: 1 THRU 104

H FOR CUM LINE NUMBERS: 105 AND ON

J METAL RUB PLATE 4 ADDED TO AREA CONTACTED BY INBOARD FLAP FLEXIBLE SEALS AND THE MIDFLAP SEAL PLATE. FOR CUM LINE NUMBERS: 299, 300, 302, 303, 305 THRU 308

K DELETED

Wing to Body Fairing
Figure 2 (Sheet 1)

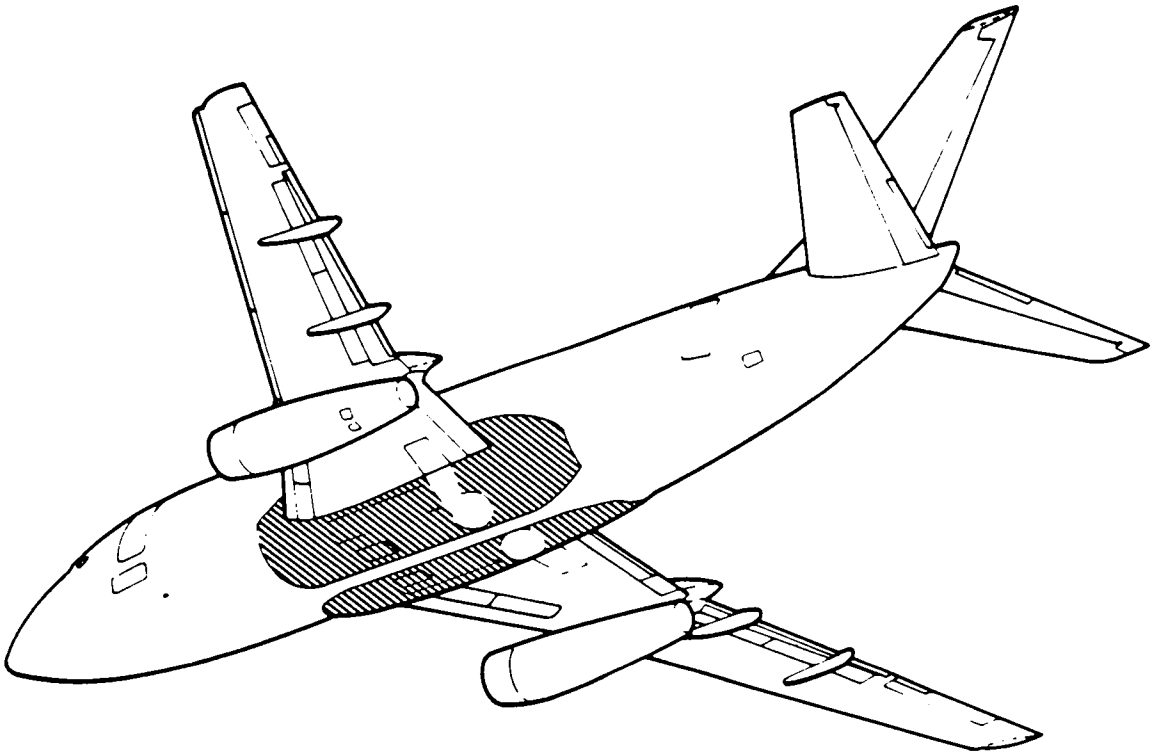

Wing to Body Fairing
Figure 2 (Sheet 2)

REF DWG
65-73728

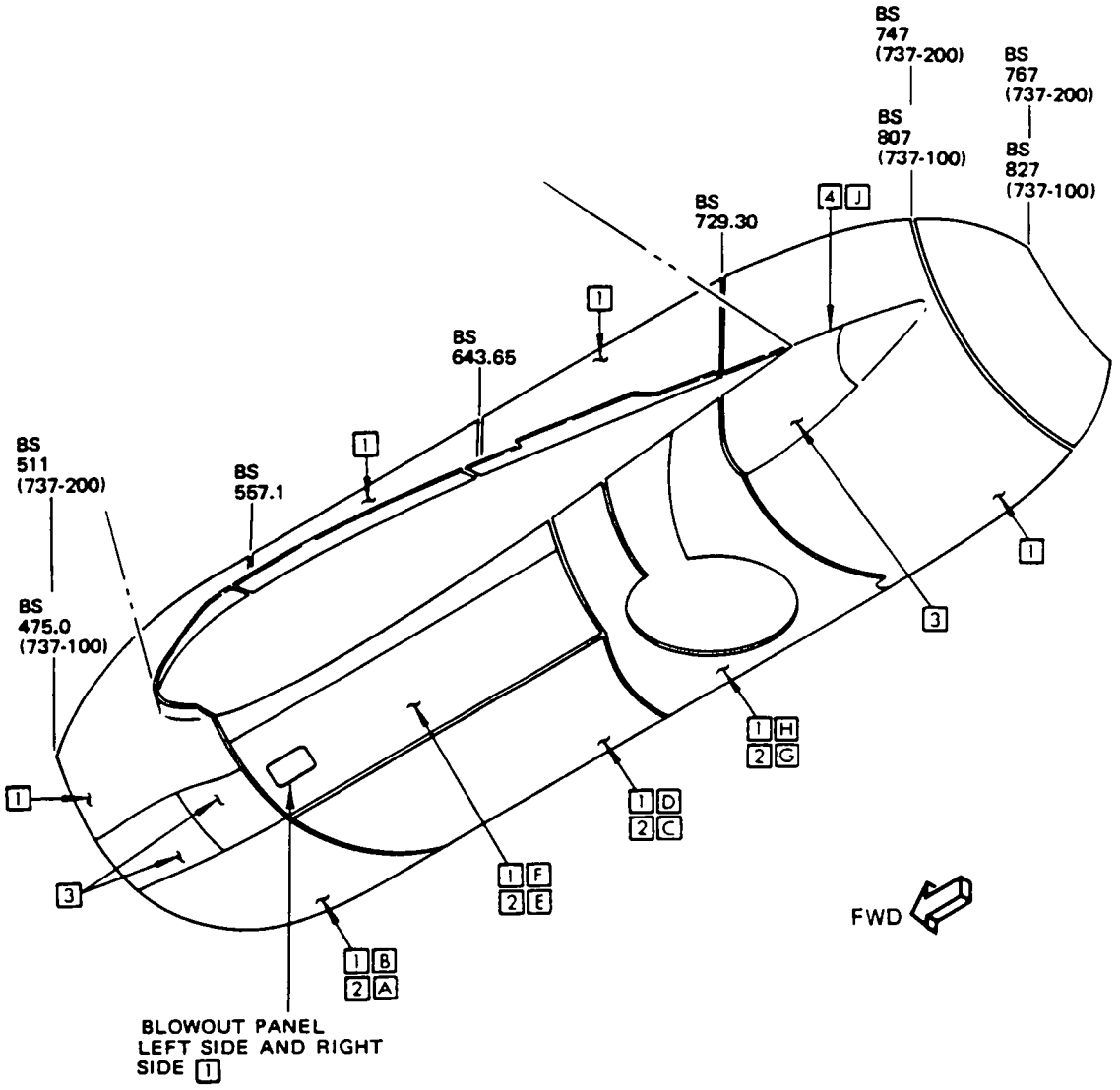

LEFT SIDE SHOWN
RIGHT SIDE OPPOSITE

Wing to Body Fairing
Figure 2 (Sheet 3)

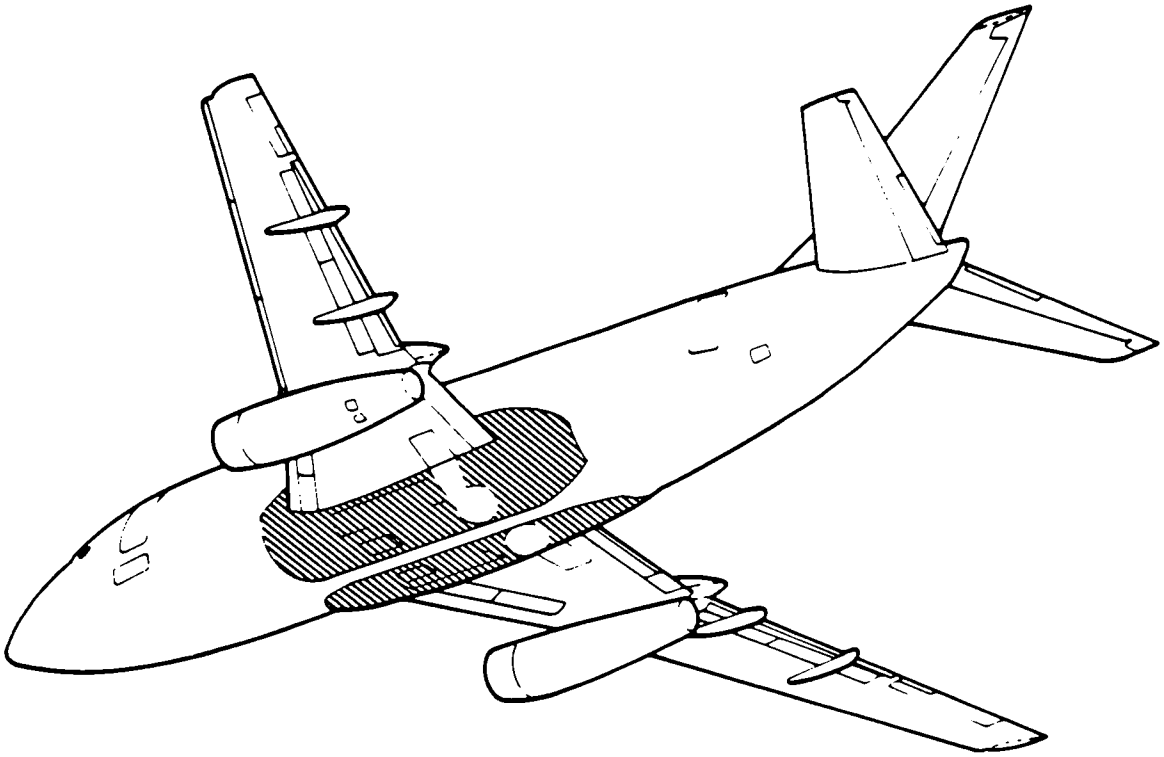

NOTES

[A] PLY ORIENTATION CONVENTION:
THE PLY ORIENTATION OF EACH PLY IS DESIGNATED BY A NUMBER (IN DEGREES) REPRESENTING THE ORIENTATION OF THE AXIS PARALLEL TO THE DIRECTION OF FILAMENTS (IN TAPE) OR LONGITUDINALLY ORIENTED YARN (IN A WOVEN FABRIC) WITH RESPECT TO A REFERENCE AXIS. 0 DEGREES IS THE REFERENCE AXIS. THE DIRECTION OF LONGITUDINAL YARN IN A WOVEN FABRIC IS CALLED THE WARP DIRECTION

[B] MATERIAL AND PLY ORIENTATION ARE ALWAYS SHOWN FOR FIELD AREAS. SEE BOEING DRAWINGS FOR EDGEBANDS AND AREAS WITH DOUBLERS WHENEVER THEY ARE NOT SHOWN IN THE MANUAL AS ADJUNCTS TO FIELD AREAS

[C] PREPREG GLASS FABRIC PER BMS 8–79 TYPE O. BMS 8–79 TYPE O, I, OR II FOR DOUBLERS TO OBTAIN REQUIRED THICKNESS PER BOEING DRAWINGS

[D] PREPREG GLASS FABRIC PER BMS 8–129 CLASS I, TYPE O, I, II, OR IV FOR DOUBLERS TO OBTAIN REQUIRED THICKNESS PER BOEING DRAWINGS (OPTIONAL: BMS 8–79 CLASS I, TYPE 1581)

[E] CORE RIBBON DIRECTION

[F] FABRIC WARP DIRECTION

[G] FOR 737–100 AIRPLANES

[H] FOR 737–200 AIRPLANES

Wing to Body Fairing Structure Identification
Figure 3 (Sheet 1)

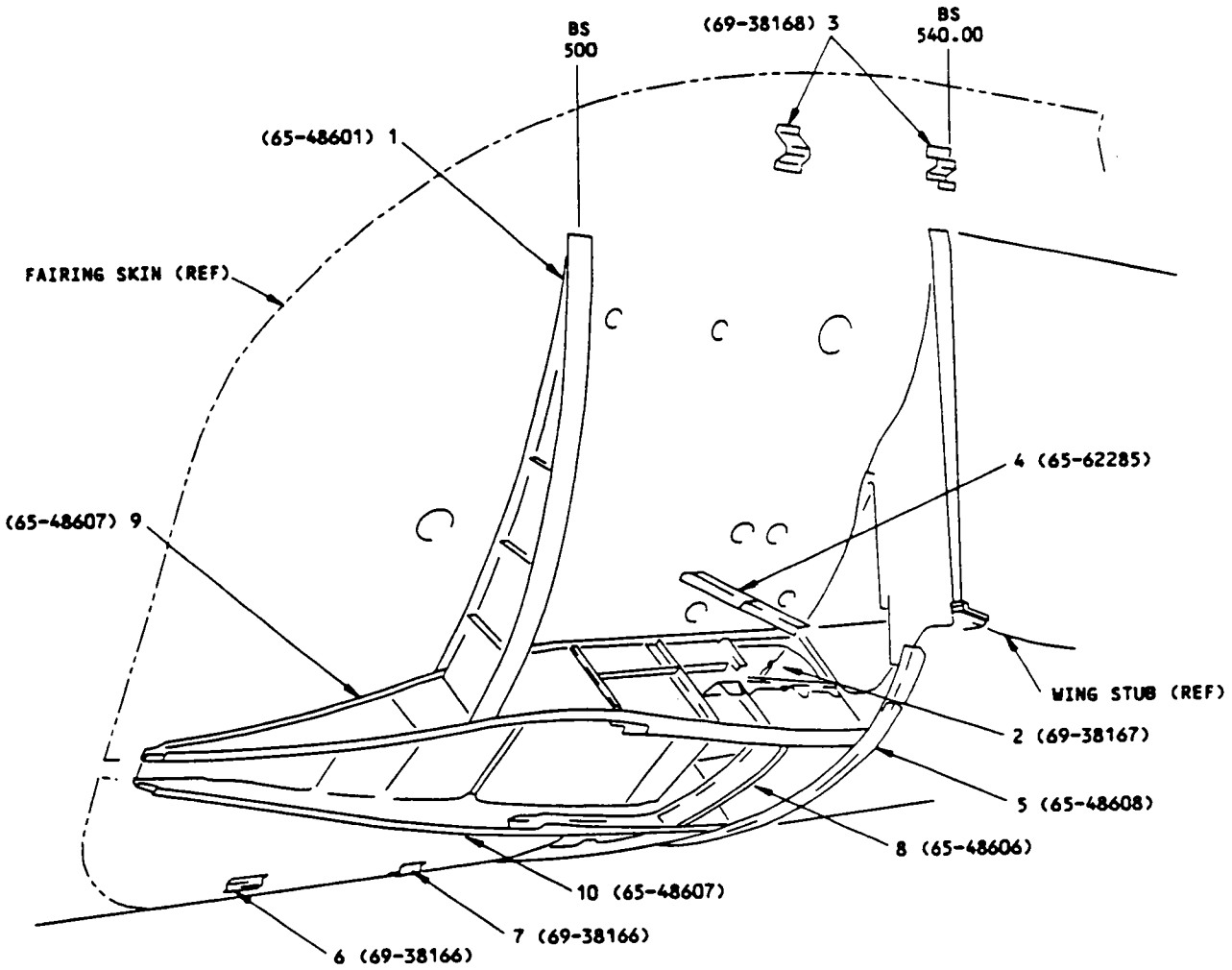

DETAIL I

LIST OF MATL

Wing to Body Fairing Structure Identification
Figure 3 (Sheet 2)

228669

ITEM	DESCRIPTION	GAGE	MATERIAL	EFFECTIVITY
1	FRAME ASSY - A/C FAIRING SPT			
	WEB	0.025	CLAD 2024-T3	
	TEE		BAC1505-100052 2024-T42	
	STIFFENER		BAC1505-18600 2024-T3511	
	ANGLE		BAC1503-100187 2024-T42	
2	BAFFLE ASSY			
	BAFFLE	0.050	CLAD 2024-T42	
	DOOR	0.050	CLAD 2024-T42	
3	FAIRING ATTACH CLIP	0.080	2024-T42	
4	ANGLE ASSY			
	ANGLE	0.100	CLAD 7075-T6	
	ANGLE	0.090	TI-6AL-4V PER MIL-T-9046, TYPE 3, COMP C	
	ANGLE	0.125	CLAD 2024-T42	
5	FORMER ASSY			
	ATTACH ANGLE		BAC1504-8174 2024-T3511	
	TEE CHORD		BAC1506-1850 2024-T42	
	HINGE SUPPORT	0.063	CLAD 2024-T42	
	TIE PLATE	0.080	CLAD 2024-T3	
	GUSSET	0.080	CLAD 2024-T3	
6	FAIRING ATTACH CLIP	0.10	2024-T42	
7	FAIRING ATTACH CLIP	0.125	2024-T42	
8	COVER SUPPORT ASSY - A/C INLET			
	CHANNEL	0.050	CLAD 2024-T4	
	WEB - UPR, LWR	0.020	CLAD 2024-T3	
	ZEE - UPR, LWR	0.063	CLAD 2024-T4	
	FORMER	0.040	CLAD 2024-T4	
	ZEE - AFT	0.050	CLAD 2024-T4	
9	UPPER DUCT WALL ASSY			
	DUCT SIDEWALL	0.040	CLAD 2024-T3	
	DUCT SIDEWALL - AFT	0.032	CLAD 2024-T3	
	SUPPORT TEE - UPR, OUTBD		BAC1506-1350 2024-T42	
	ZEE - FWD	0.040	CLAD 2024-T3	
	STIFFENER - TEE		BAC1505-18641 2024-T3511	
	ANGLE		BAC1490-2635 CLAD 2024-T3	
	TEE - AFT		BAC1505-100471 7075-T6511	
	FRAME ATTACH ANGLE		BAC1506-1897 2024-T3511	
	SUPPORT ANGLE - INBD		BAC1490-2734 CLAD 2024-T42	
10	LOWER DUCT WALL ASSY			
	DUCT SIDEWALL	0.040	CLAD 2024-T3	
	SUPPORT TEE - LWR, OUTBD		BAC1506-1350 2024-T42	
	DOUBLER	0.040	CLAD 2024-T3	
	CHANNEL	0.063	CLAD 2024-T3	
	STIFFENER		BAC1490-2635 CLAD 2024-T3	
	CHANNEL	0.040	CLAD 2024-T3	
	ANGLE		BAC1490-2596 CLAD 2024-T3	
	DUCT SIDEWALL - AFT	0.032	CLAD 2024-T3	
	FRAME ATTACH ANGLE	0.063	CLAD 2024-T42	

LIST OF MATERIALS FOR DETAIL I

Wing to Body Fairing Structure Identification
Figure 3 (Sheet 3)

228675

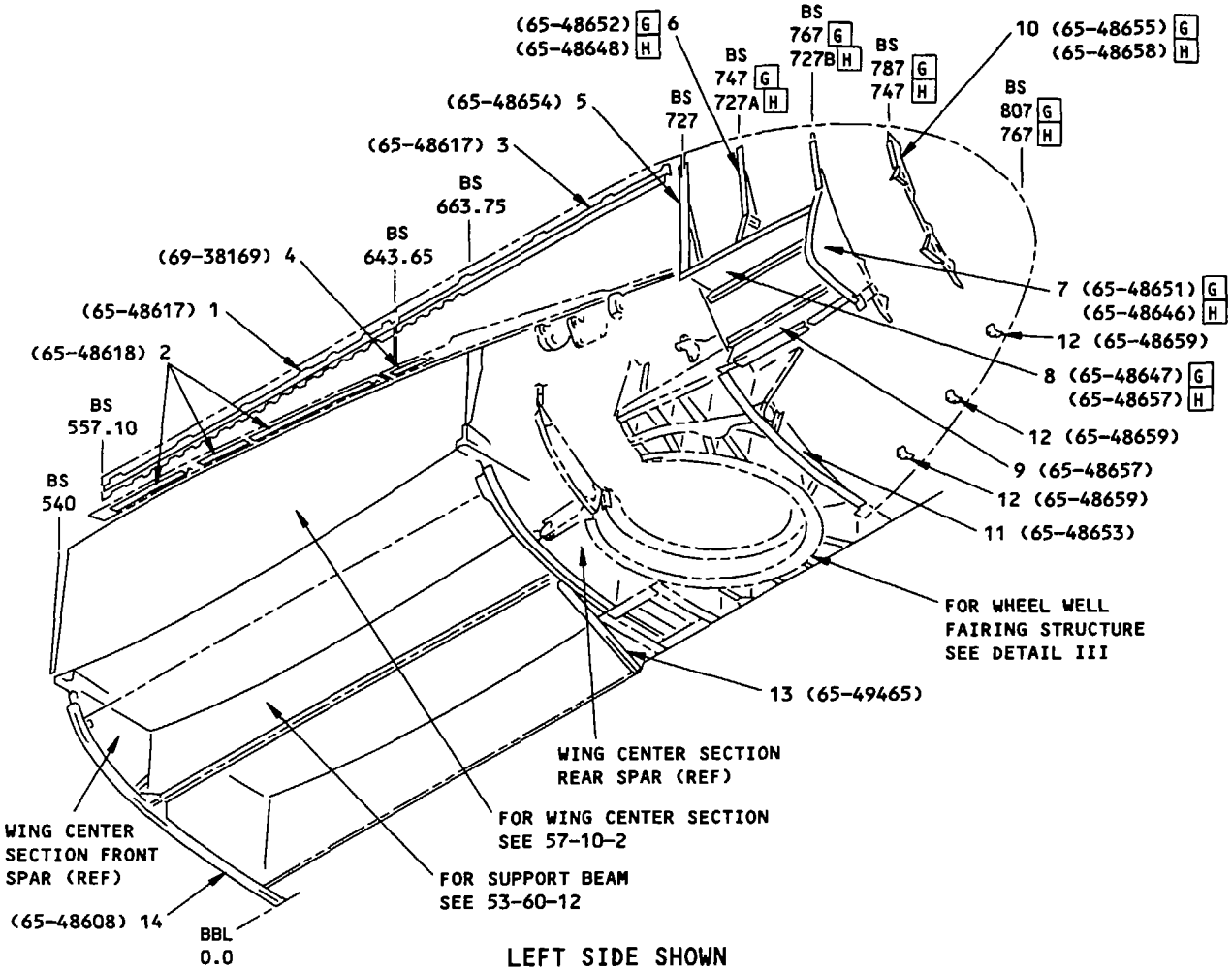

LEFT SIDE SHOWN
RIGHT SIDE OPPOSITE
DETAIL II

ITEM	DESCRIPTION	GAGE	MATERIAL	EFFECTIVITY
1	FAIRING ATTACH CLIP - UPR		BAC1517-1487 CLAD 2024-T4	
2	FAIRING ATTACH CLIP - LWR		BAC1517-1502 CLAD 2024-T4	
3	FAIRING ATTACH CLIP - UPR		BAC1517-1537 CLAD 2024-T4	
4	FAIRING ATTACH CLIP - LWR	0.090	2024-T4	
5	FRAME ASSY			
	WEB	0.063	CLAD 2024-T3	
	STIFFENER		AND10136-1401 2024-T3511	
	CHORD - TEE		BAC1505-100361 2024-T42	
	ATTACH ANGLE	0.063	CLAD 2024-T42	
	ANGLE - LWR		AND10133-1002 2024-T3511	

LIST OF MATERIALS FOR DETAIL II
Wing to Body Fairing Structure Identification
Figure 3 (Sheet 4)

BOEING PROPRIETARY - Copyright © - Unpublished Work - See title page for details.

ITEM	DESCRIPTION	GAGE	MATERIAL	EFFECTIVITY
6	FRAME ASSY			
	WEB	0.063	CLAD 2024-T3	
	ATTACH ANGLE		BAC1490-2736 CLAD 2024-T42	
	ATTACH TEE - LWR		AND10136-1403 2024-T3511	
	TEE - UPR		AND10136-2001 2024-T42	
	TEE - INBD		AND10136-1401 2024-T3511	
7	FRAME ASSY			
	WEB		SEE DETAIL III [G]	
	CORE - WEB		NONMETALLIC HONEYCOMB PER BMS 8-124, CLASS IV, TYPE V, GRADE 3.0	
	TEE - UPR		BAC1505-100350 2024-T42	
	TEE - LWR		AND10136-2001 2024-T42	
	CHANNEL		BAC1509-100091 2024-T3511	
	ATTACH ANGLE		BAC1505-100120 2024-T42	
8	UPPER TORQUE TUBE CUTOUT PANEL ASSY			
	SKIN - INNER, OUTER		SEE DETAIL IV [H]	
	CORE		NONMETALLIC HONEYCOMB PER BMS 8-124, CLASS IV, TYPE V, GRADE 3.0	
	TEE - UPR		AND10136-2004 2024-T42	
	ATTACH ANGLE	0.09	CLAD 2024-T3	
9	LOWER TORQUE TUBE CUTOUT PANEL ASSY			
	WEB - BONDED	0.025	CLAD 2024-T3 (2) PLIES	
	STIFFENER TEE - FWD		AND10136-2001 2024-T3511	
	STIFFENER TEE - CTR		AND10141-2002 7075-T3511	
	STIFFENER TEE - CTR		BAC1505-100164 2024-T3511	
	STIFFENER TEE - AFT		AND10136-1401 2024-T3511	
	STIFFENER TEE - UPR		AND10136-1405 2024-T3511	
	TEE - LWR		AND10136-2401 2024-T42	
	ATTACH ANGLE - CTR	0.09	CLAD 2024-T3	
10	FRAME ASSY			
	WEB - UPR, LWR	0.063	CLAD 2024-T3	
	ANGLE - UPR, LWR		AND10134-0702 2024-T3511	
	TEE - UPR LWR		BAC1506-1308 2024-T3511	
	ATTACH TEE		BAC1505-100120 2024-T3511	
	TEE		BAC1505-100350 2024-T3511	
11	FRAME ASSY - BULKHEAD			
	WEB		PREPREG GLASS FABRIC PER BMS 8-129, CLASS I, TYPE 0,1,2 & 4 (OPTIONAL; BMS 8-79, CLASS I, TYPE 1581) [D] [H]	
	TEE - CHORD		AND10136-2404 2024-T42	
	ANGLE - OUTBD		AND10133-1002 2024-0	
	TEE		AND10136-1501 2024-T3511	
	ATTACH ANGLE		AND10134-1403 2024-T42	
12	FAIRING ATTACH CLIP	0.080	2024-T42	
13	STRUT		BAC1506-1748 2024-T42	
14	FORMER - TEE CHORD		BAC1506-1850 2024-T42	

LIST OF MATERIALS FOR DETAIL II (CONT)
Wing to Body Fairing Structure Identification
Figure 3 (Sheet 5)

228676

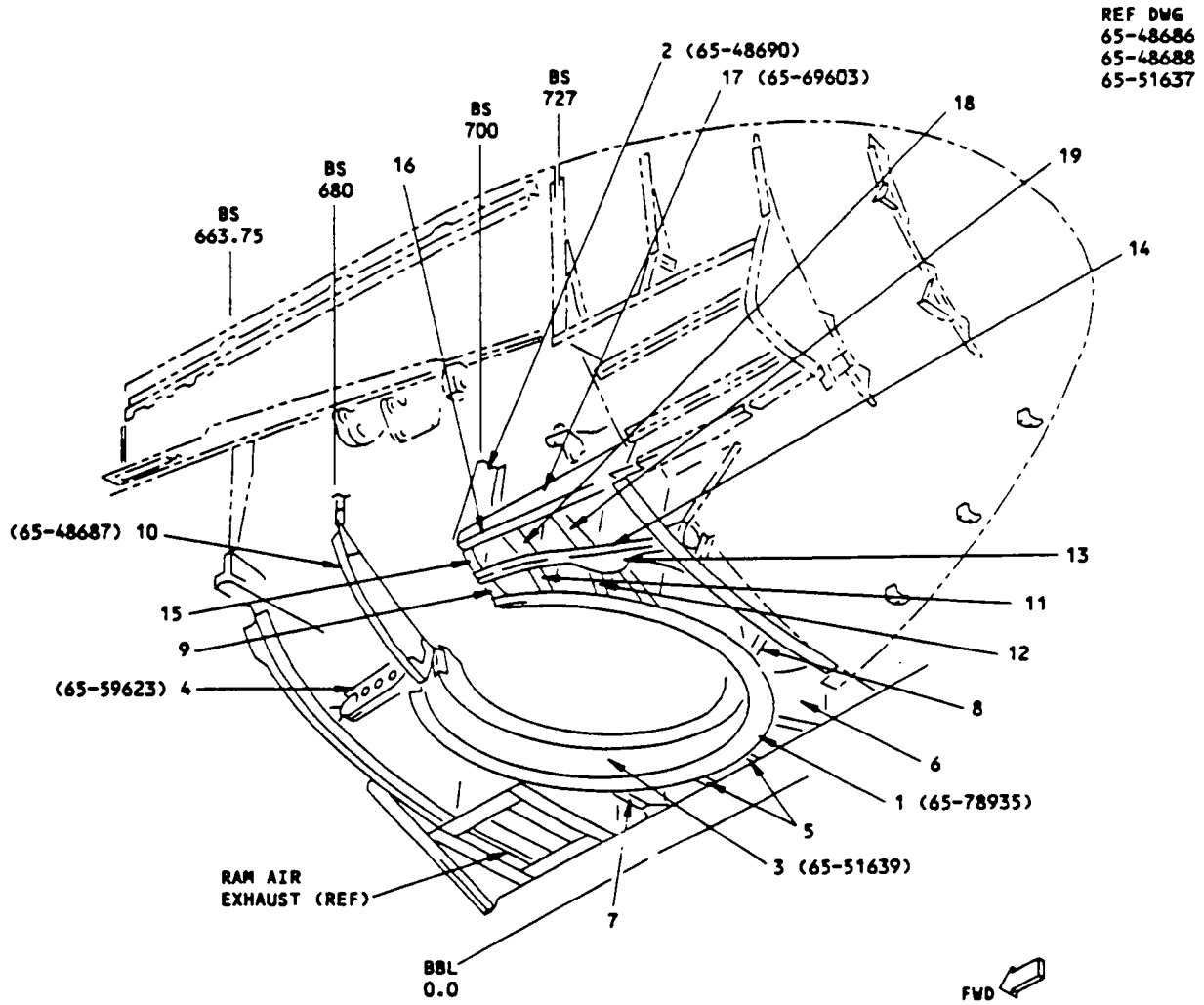

LEFT SIDE SHOWN
RIGHT SIDE OPPOSITE
DETAIL III

ITEM	DESCRIPTION	GAGE	MATERIAL	EFFECTIVITY
1	FAIRING - SUPPORT RING	0.063	CLAD 2024-T42	
2	VERTICAL SUPPORT BEAM	0.090	CLAD 2024-T42	
3	SUPPORT RING - MANIFOLD ASSY			
	CHORD - UPR		BAC1503-2731 7075-T6	
	CHORD - LWR		BAC1505-100022 7075-T6	
	WEB - BONDED	0.020	CLAD 2024-T3 (2) PLIES PER BMS 5-69	
	LIP FAIRING	0.063	CLAD 2024-T4	

LIST OF MATERIALS FOR DETAIL III
Wing to Body Fairing Structure Identification
Figure 3 (Sheet 6)

228673

ITEM	DESCRIPTION	GAGE	MATERIAL	EFFECTIVITY
4	BEAM CHANNEL - INNER, OUTER	0.056	CLAD 2024-T42	
5	SUPPORT ASSY			
	CHORD - LWR		AND10136-2004 2024-T42	
	CHORD - UPR		BAC1505-100158 2024-T42	
	WEB	0.063	CLAD 2024-T3	
6	SUPPORT ASSY			
	CHORD - UPR, LWR		AND10136-1505 2024-T42	
	WEB - BONDED	0.025	2024-T3 (2) PLIES PER BMS 5-69, TYPE I	
7	SUPPORT ASSY			
	CHORD - UPR, LWR		AND10133-1002 2024-T3511	
	WEB	0.025	2024-T3 (2) PLIES PER BMS 5-69, TYPE I	
8	SUPPORT ASSY			
	CHORD - UPR, LWR		AND10134-1006 2024-T42	
	WEB	0.063	CLAD 2024-T3	
9	SUPPORT ASSY			
	CHORD - LWR		BAC1514-560 2024-T3511	
	WEB	0.063		
10	FORMER ASSY			
	CHORD - UPR, LWR		AND10134-1205 2024-T4	
	CHANNEL - MLG DOOR		BAC1510-319 2024-T4	
	WEB - BONDED	0.025	CLAD 2024-T3 (2) PLIES PER BMS 5-69	
11	SUPPORT ASSY			
	TEE CHORD - LWR		AND10136-2002 2024-T3511	
	TEE CHORD - UPR		BAC1506-1643 2024-T42	
	WEB - BONDED	0.025	CLAD 2024-T3 (2) PLIES PER BMS 5-69	
12	SUPPORT ASSY			
	ANGLE - LWR		AND10133-0702 2024-T3511	
	ANGLE - UPR		AND10134-1006 2024-T42	
	WEB - BONDED	0.025	CLAD 2024-T3 (2) PLIES PER BMS 5-69	
13	CHORD - LWR, INBD	0.090	2024-T42	
14	CHORD - UPR, INBD		BAC1503-2772 2024-T42	
15	SUPPORT ASSY			
	ANGLE - LWR		AND10134-1205 2024-T3511	
	TEE - UPR		AND10136-2002 2024-T3511	
16	CHORD - OUTER		BAC1503-100137 2024-T42	
17	SEAL	0.015	CORROSION RESISTANT STEEL - AISI TYPE 304, 1/2 HARD	
18	SUPPORT ASSY			
	ANGLE - UPR		AND10133-0701 2024-T42	
	TEE - LWR		AND10136-2001 2024-T42	
	WEB - UPR	0.025	CLAD 2024-T3 (2) PLIES PER BMS 5-69	
19	SUPPORT ASSY			
	ANGLE - UPR		AND10133-0701 2024-T3511	
	TEE - LWR		AND10136-2001 2024-T42	
	WEB	0.025	CLAD 2024-T3 (2) PLIES PER BMS 5-69	

LIST OF MATERIALS FOR DETAIL III (CONT)

Wing to Body Fairing Structure Identification
Figure 3 (Sheet 7)

228677

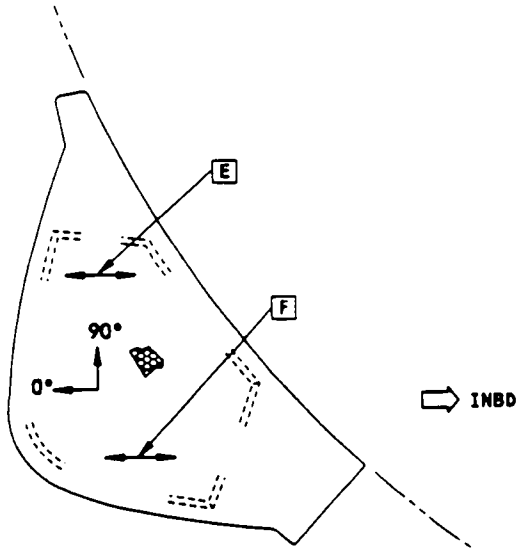

VIEW ON FRAME WEB ASSY A
AT BS 727B

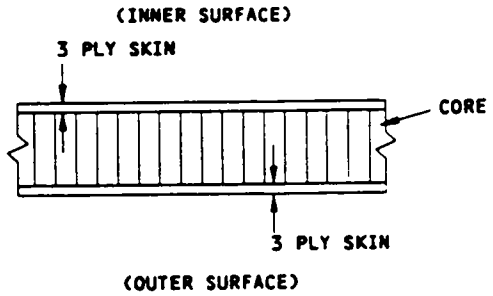

SECTION THRU HONEYCOMB PANEL

ITEM	PLY NO.	MATERIAL	PLY ORIENTATION
7	INNER AND OUTER SKINS	C	0° F

PLY TABLE FOR WEB ASSY B

DETAIL IV
Wing to Body Fairing Structure Identification
Figure 3 (Sheet 8)

228674

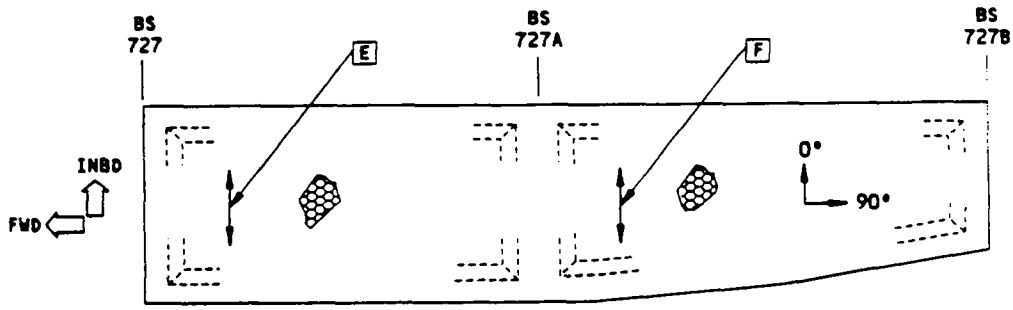

VIEW ON UPPER PANEL A

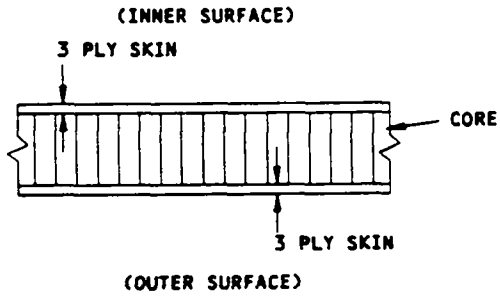

SECTION THRU HONEYCOMB PANEL

ITEM	PLY NO.	MATERIAL	PLY ORIENTATION
8	INNER AND OUTER SKINS	D	0° F

PLY TABLE FOR UPPER PANEL B

DETAIL V

Wing to Body Fairing Structure Identification
Figure 3 (Sheet 9)

228678

NOTES

A FOR CUM LINE NUMBERS:
1 THRU 71, 73 THRU 83, 85 THRU 101, 103 THRU 109, 111 THRU 127, 129 THRU 138, 140 THRU 142, 144 THRU 148, 150 THRU 154, 156, 159 THRU 161, 163, 165, 167 THRU 172, 174 THRU 183, 185 THRU 193, 195, 197, 198, 200 THRU 202, 204, 206, 207, 209 THRU 211, 213, 214, 216, 218 THRU 222, 224, 226 THRU 229, 231 THRU 233, 235 THRU 237, 239 THRU 241, 243, 244, 246 THRU 248, 250, 252, 253, 257, 259 THRU 262, 264, 266, 267, 269 THRU 273, 275, 277, 279

B FOR CUM LINE NUMBERS:
72, 84, 102, 110, 128, 139, 143, 149, 155, 157, 158, 162, 164, 166, 173, 184, 194, 196, 199, 203, 205, 208, 212, 215, 217, 223, 225, 230, 234, 238, 242, 245, 249, 251, 254 THRU 256, 258, 263, 265, 268, 274, 276

C FOR CUM LINE NUMBERS:
280, 282 THRU 285, 287, 291 THRU 293, 296

D FOR CUM LINE NUMBERS:
278, 281, 286, 288 THRU 290, 294, 295, 297 THRU 316

E FOR CUM LINE NUMBERS:
317 AND ON

F FOR AIRPLANES WITH SB 53-1031 INCORPORATED

Wing-to-Body Drag Angles
Figure 3A (Sheet 1)

ITEM	DESCRIPTION	GAGE	MATERIAL	REPAIR FIG. NO.
1	ANGLE	0.090	CLAD 7075-T6 SHEET	
2	ANGLE	0.112	CLAD 7075-T6 SHEET	
3	ANGLE	0.125	CLAD 2024-T42 SHEET	
4	ANGLE	0.090	CLAD 2024-T42 SHEET	
5	ANGLE	0.112	CLAD 2024-T42 SHEET	
6	ANGLE		BAC1514-2299 EXTR 2024-0 HT-T42	
7	ANGLE	0.090	TITANIUM 6AL-4V	

Wing-to-Body Drag Angles
Figure 3A (Sheet 2)

REF DWGS
65-46879
65-62285

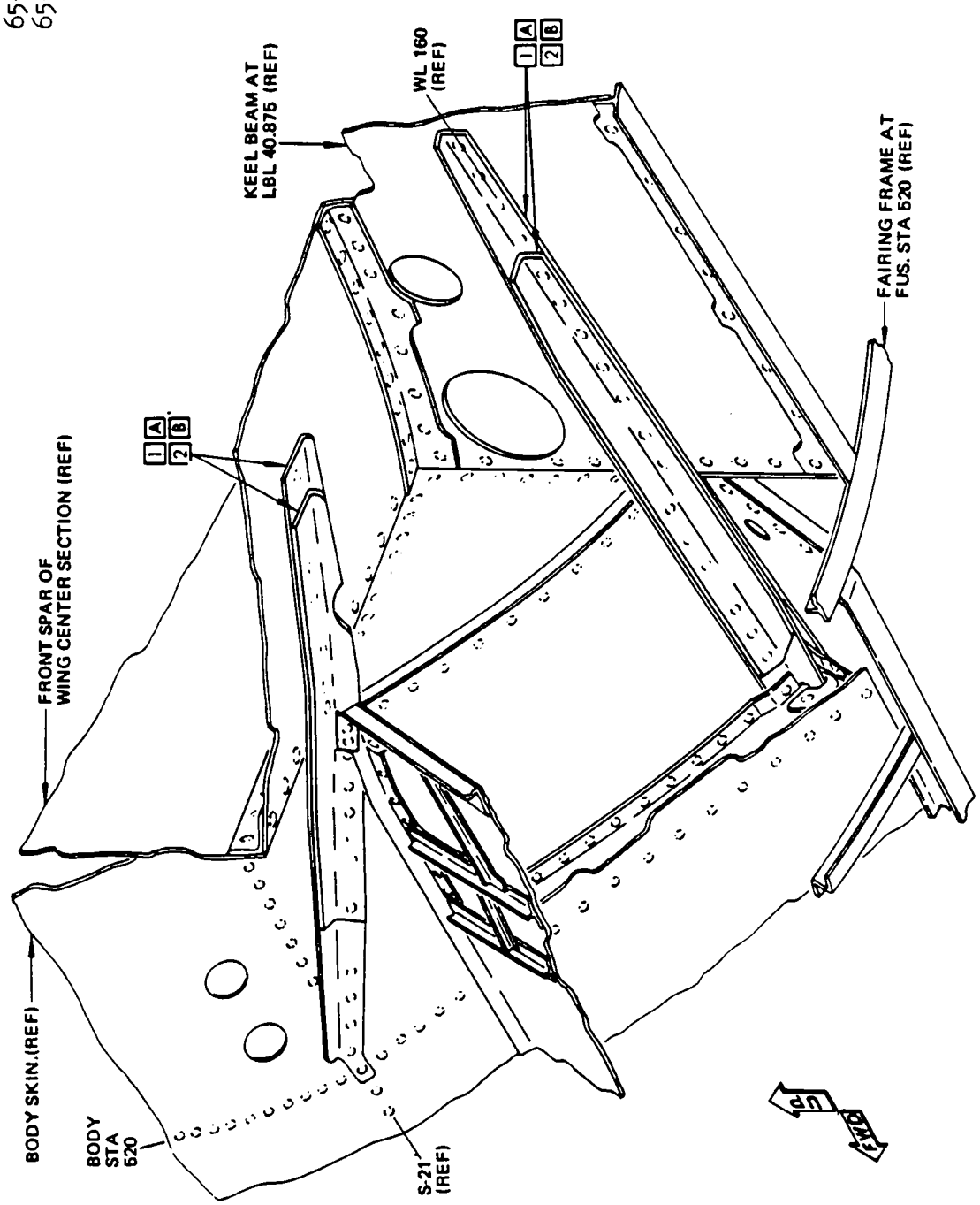

CONFIGURATION OF DRAG ANGLES FOR AIRPLANES LISTED IN A AND B

Wing-to-Body Drag Angles
Figure 3A (Sheet 3)

REF DWGS
65-46879
65-62285

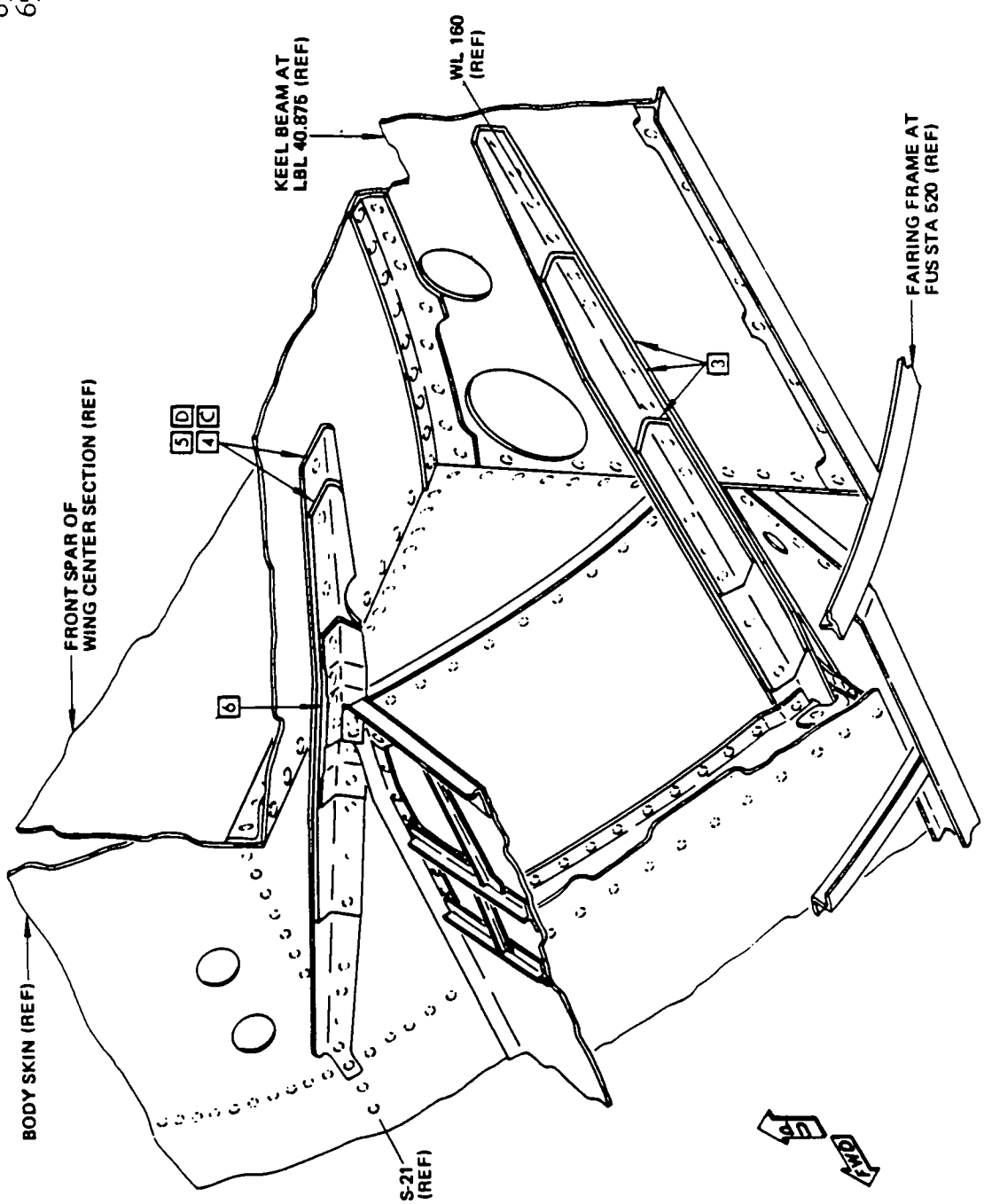

CONFIGURATION OF DRAG ANGLES
FOR AIRPLANES LISTED IN C AND D

Wing-to-Body Drag Angles
Figure 3A (Sheet 4)

REF DWG
65-62285

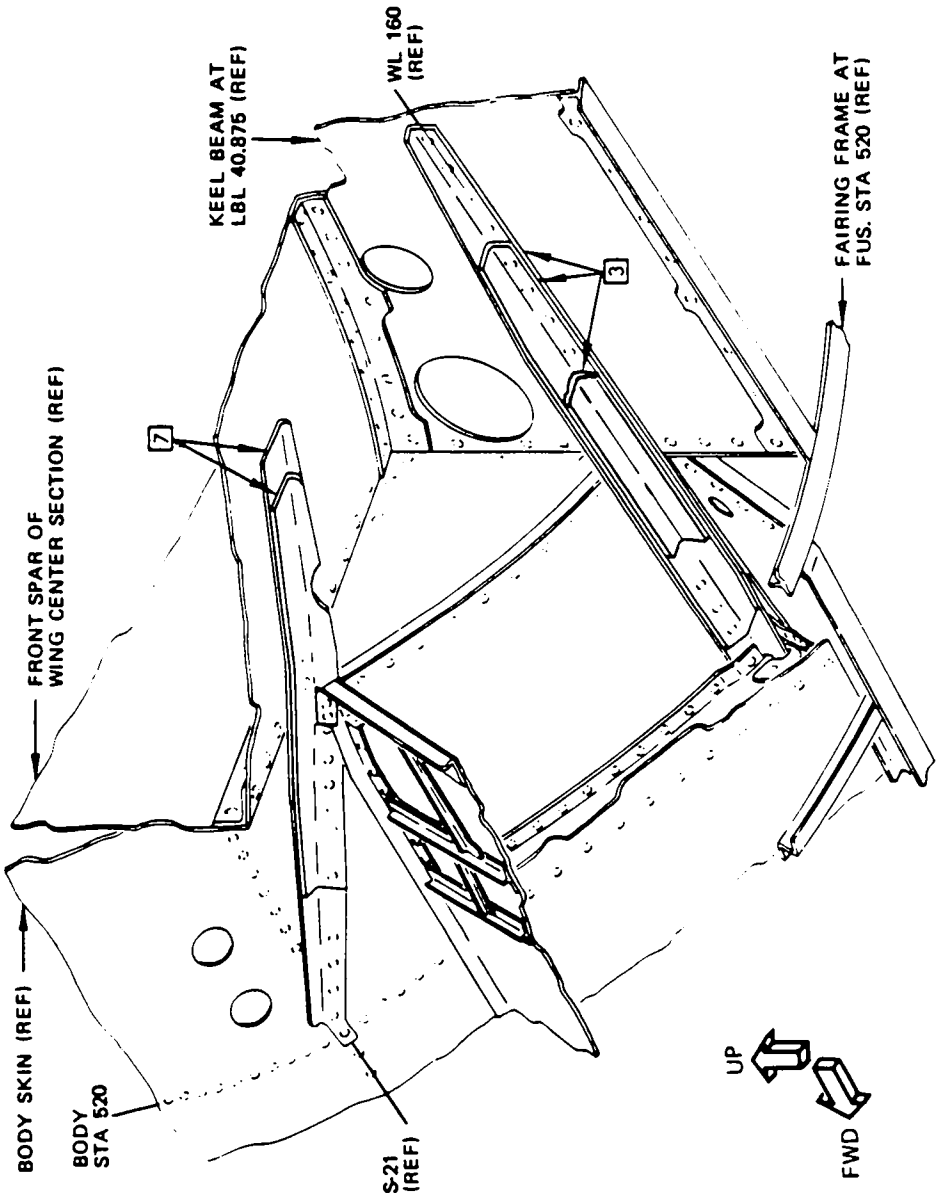

CONFIGURATION OF DRAG ANGLES
FOR AIRPLANES LISTED IN E AND F

Wing-to-Body Drag Angles
Figure 3A (Sheet 5)

REF DWG
65-46577

ITEM	MATERIAL	REPAIR FIG. NO.
1	GLASS FABRIC CLOTH REINFORCED PLASTIC PER BMS 8-79 TYPE 120 WITH NONMETALLIC HONEY-COMB CORE	51-40-9 FIG. 1
2	0.032 CRES SHEET TYPE 321 OR 347	
3	DELETE	
4	GLASS FABRIC REINFORCED PLASTIC SKINS PER BMS 8-169 TYPE 120 WITH NOMEX HONEYCOMB CORE PER BMS 8-124 CLASS IV TYPE 5 GR 3	

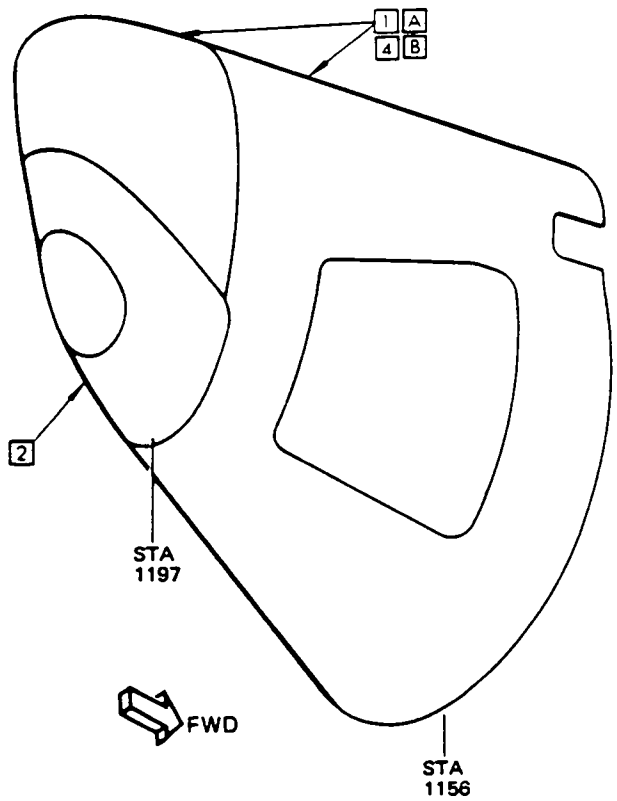

NOTES

A FOR CUM LINE NUMBERS:
1 THRU 286

B FOR CUM LINE NUMBERS:
287 AND ON

C DELETED

Fuselage Tail Cone Identification
Figure 4

ITEM	MATERIAL	REPAIR FIG. NO.
1	0.040 2024-T4 CLAD	55-30-6 Fig. 2
2	0.050 2024-T4 CLAD	55-30-6 Fig. 2
3	0.040 2024-T4 CLAD	51-40-3 Fig. 1
4	0.050 2024-T4	51-40-3 Fig. 1
5	0.032 2024-T4 CLAD	51-40-3 Fig. 1
6	0.063 CLAD 2024-T3	51-40-3 Fig. 1
7	0.040 CLAD 2024-T4	51-40-3 Fig. 1
8	0.063 CLAD 2024-T3	
9	0.040 CLAD 2024-T3	
10	0.050 CLAD 2024-T3	

NOTES

A FOR CUM LINE NUMBERS: 1 THRU 188

B FOR CUM LINE NUMBERS: 189 AND ON

Dorsal Fin - Material Identification
Figure 5 (Sheet 1)

REF DWG
65-73785

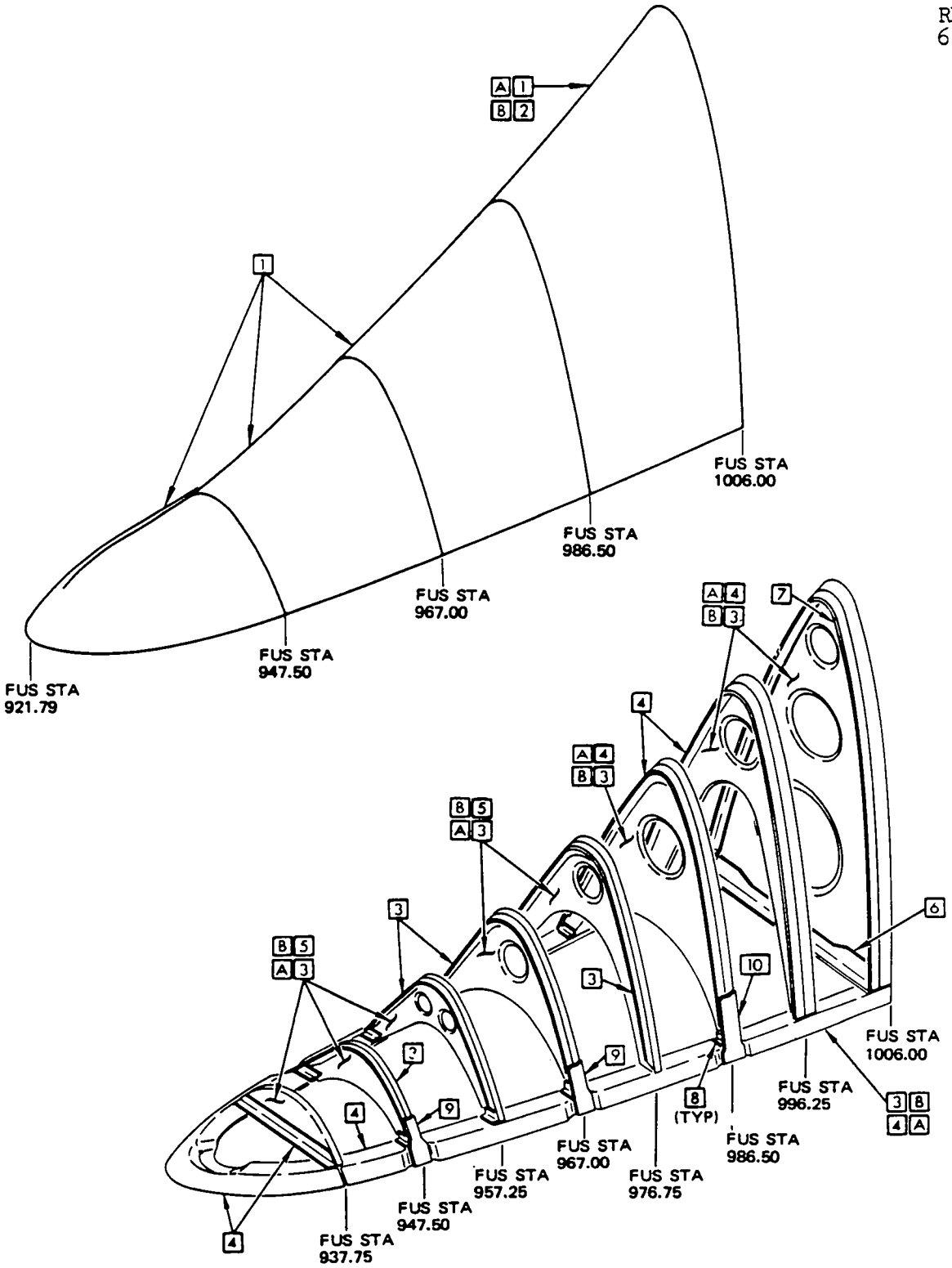

Dorsal Fin - Material Identification
Figure 5 (Sheet 2)

APPLICATION
737-2X9 CUM LINE NOS. 868, 947, 983 (PL601 THRU PL610)

BOEING 737

STRUCTURAL REPAIR

ITEM	MATERIAL	REPAIR FIG. NO.
1	RIB, BEAM 0.080 CLAD 2024-0 SHEET HT T42	
2	SEAL, RETAINER, 0.032 CLAD 2024-0 SHEET HT T42	
3	TEE, CLIP, BAC1505-100442 2024T3511 EXTRU	
4	CLIP, BAC1503-2771 2024T3511 EXTRU	
5	CLIP, BAC1503-100533 2024T3511 EXTRU	
6	CLIP, BAC1505-100246 2024-0 EXTRU HT T42	
7	CLIP, AISI 0.050 CRES 301 1/2H	
8	WEB, BEAM, GUSSETT, 0.050 CLAD 2024-0 SHT HT T42	
9	SHEAR TEE, BAC1505-39375 2024-0 EXTRU HT T42	
10	SHEAR TEE, BAC1505-100308 2024-0 EXTRU HT T42	

ITEM	MATERIAL	REPAIR FIG. NO.
11	SHEAR TEE, BAC1505-10046 2024-0 EXTRU HT T42	
12	SHEAR TEE, BAC1505-100379 2024-0 EXTRU, HT T42	
13	FARING, FWD & AFT, FIBERGLASS EPOXY LAMINATE PER BMS 8-79 TYPE 1581, OPTIONAL TYPE 7781	
14	SKIN, 0.050 CLAD 2024-T3	
15	ANGLE, BAC1503-100388 2024-0 EXTRU HT T42	
16	ANGLE, BAC1503-100388 2024T3511 EXTRU	
17	RADIUS FILLER, BAC1512-3407 2024T3511 EXTRU	
18	RADIUS FILLER, BAC1512-426 2024T3511 EXTRU	
19	RADIUS FILLER, BAC1512-484 2024T3511 EXTRU	
20	FITTING, 2024T351 BAR, MACHINED	

SLAMMR Radome Fairing
Figure 6 (Sheet 1)

REF DWG
65C25607
65C25600
65C25666
65C25702

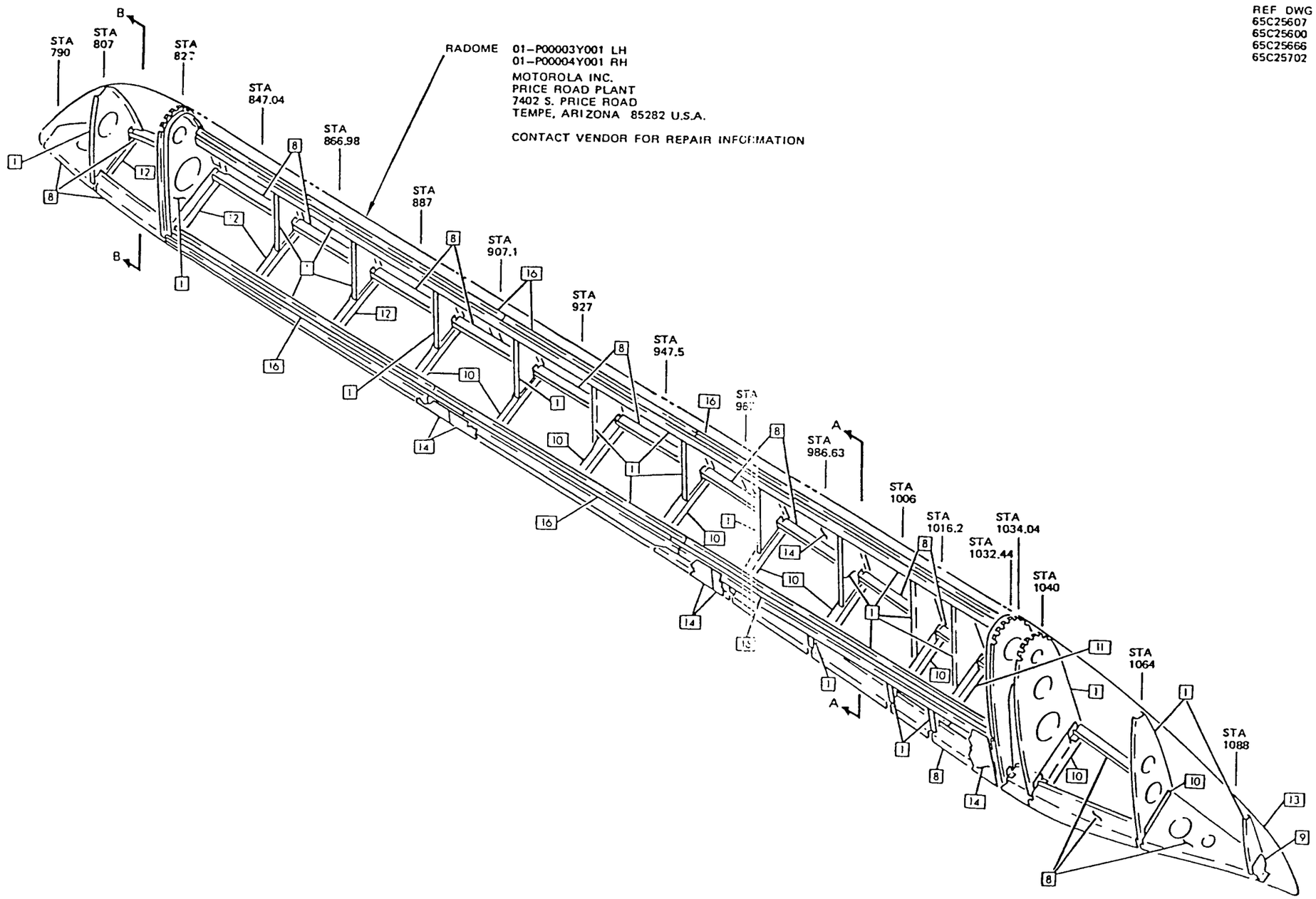

SLAMMR Radome Fairing
Figure 6 (Sheet 2)

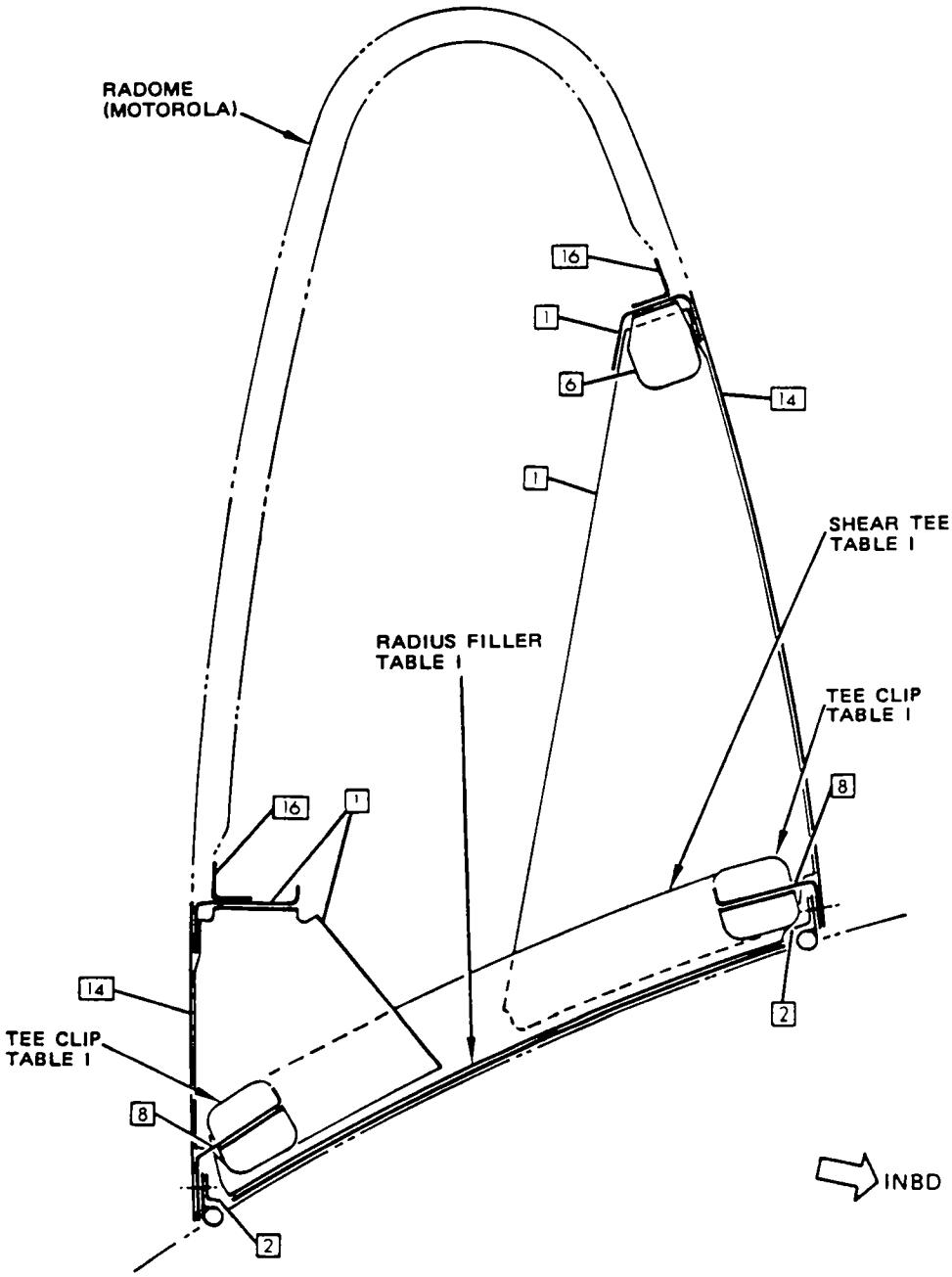

SECTION A–A
TYPICAL OF AFT RIBS

SLAMMR Radome Fairing
Figure 6 (Sheet 3)

STATION	TEE CLIP/FTG OUTBD		TEE CLIP/FTG INBD	SHEAR TEE	RADIUS FILLER
	FWD	AFT	AFT		
807.03	4	7	7	12	18
827	5		6	12	18
847.04	7		6	12	18
866.98	7		6	12	18
887	20		6	10	18
907.10	20		6	10	19
927	20		6	10	18
947.5	6		6	10	19
967	6		6	10	18
986.63	6		6	10	18
1006	6		6	10	18
1016.2	6		6	11	17
	UPR	LWR			
1032.44	5	6	6	10	19
1034.04	4		4	—	—
1040	3		3	10	—
1064	3		3	10	—
1088	—		3	9	—

MATERIAL CODES
TABLE I

SLAMMR Radome Fairing
Figure 6 (Sheet 4)

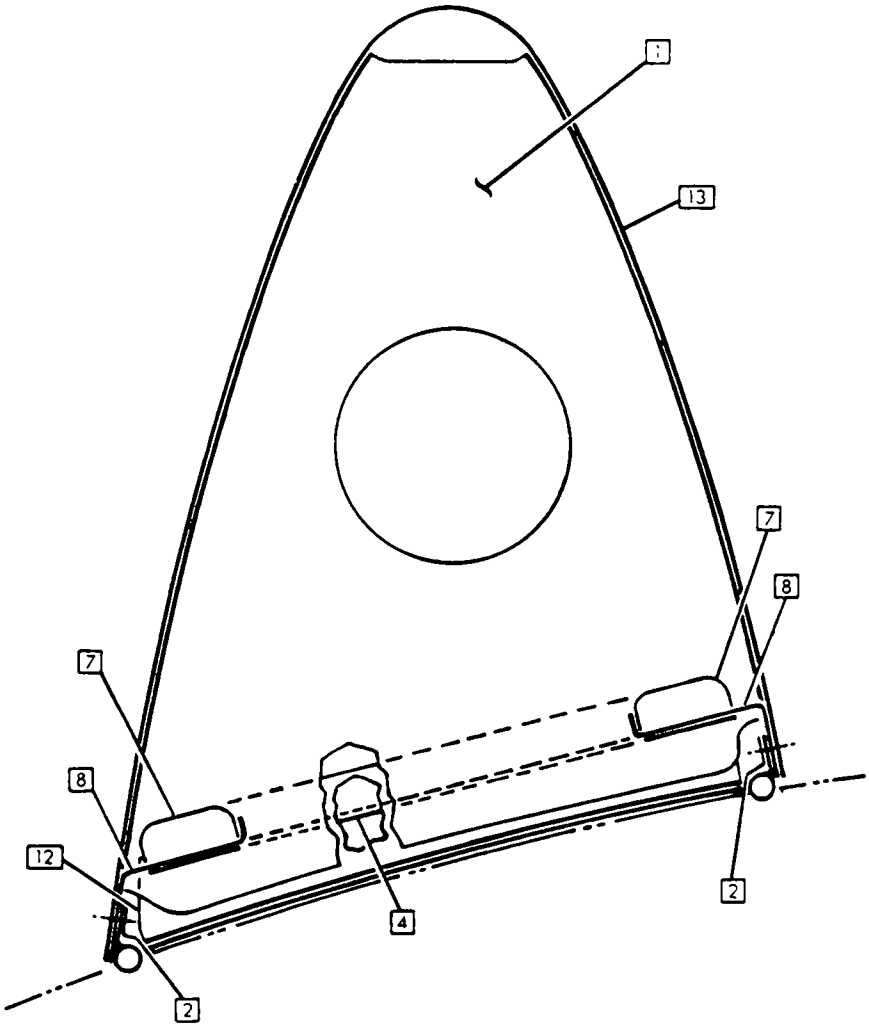

SECTION B–B

SLAMMR Radome Fairing
Figure 6 (Sheet 5)

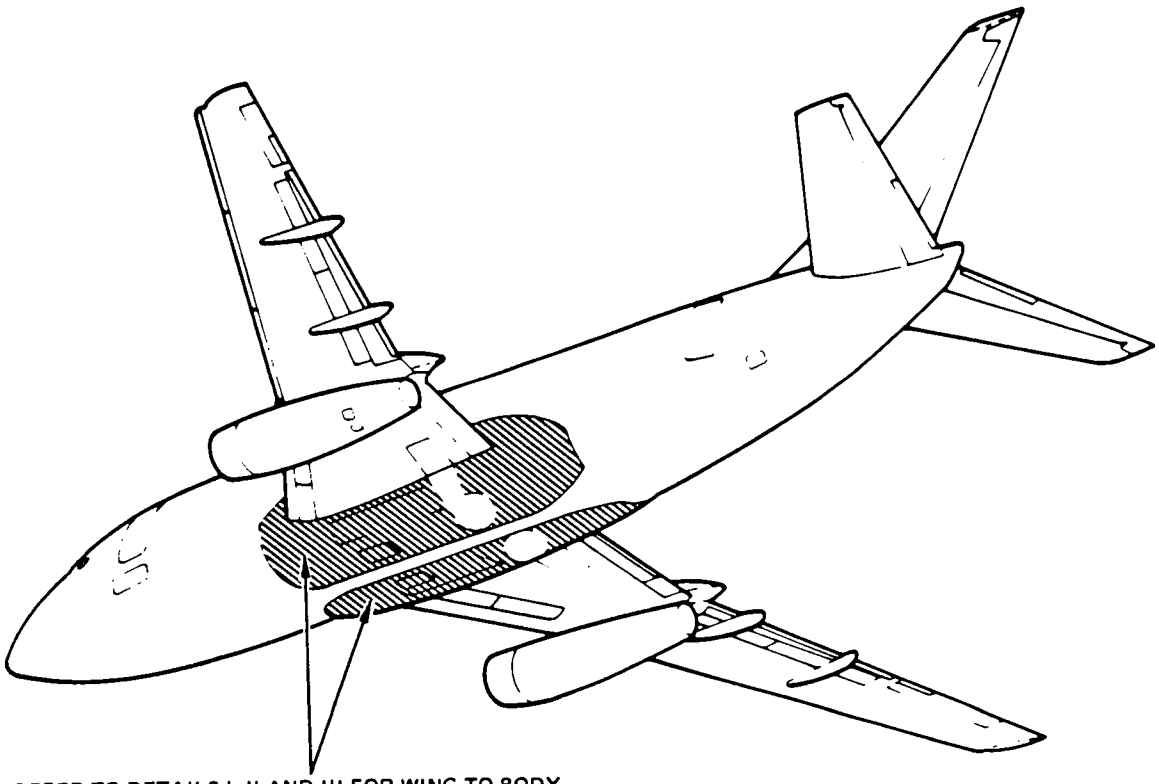

REFER TO DETAILS I, II AND III FOR WING TO BODY FAIRING STRUCTURE ALLOWABLE DAMAGE REFER TO 51–40–9 FOR WING TO BODY FAIRING SKIN ALLOWABLE DAMAGE.

[A] FOR 737–100 AIRPLANES

[B] FOR 737–200 AIRPLANES

Wing to Body Fairing Structure Allowable Damage
Figure 1 (Sheet 1)

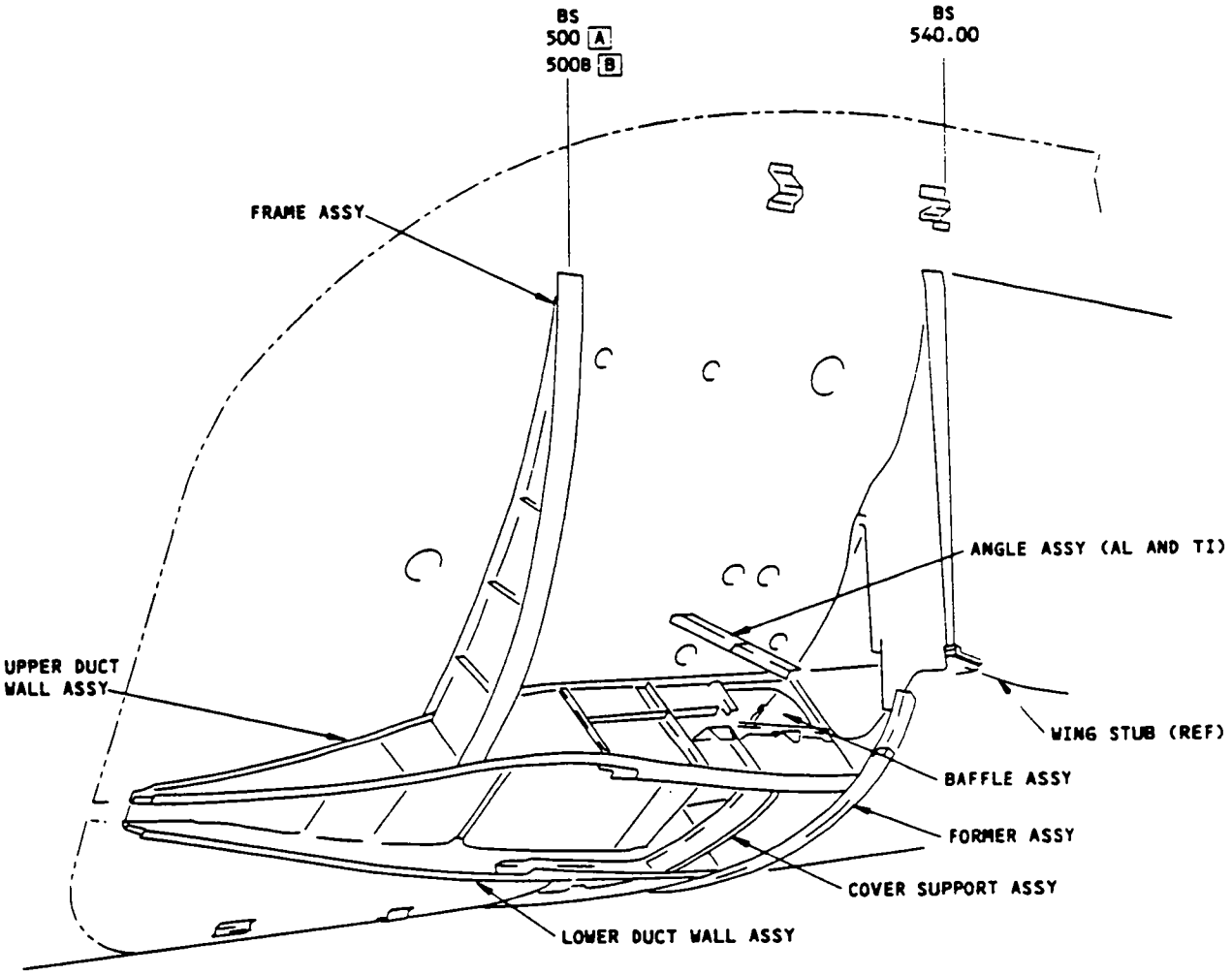

MATERIAL: ALUMINUM EXCEPT AS NOTED

DETAIL I

Wing to Body Fairing Structure Allowable Damage
Figure 1 (Sheet 2)

228397

DESCRIPTION		CRACKS	NICKS, GOUGES, SCRATCHES AND CORROSION	DENTS	HOLES AND PUNCTURES
FRAME ASSY	WEB	NOT ALLOWED	C	D	F
	TEE	NOT ALLOWED	B	NOT ALLOWED	NOT ALLOWED
	STIFFENER	NOT ALLOWED	B	NOT ALLOWED	E
	ANGLE	NOT ALLOWED	B	NOT ALLOWED	NOT ALLOWED
BAFFLE ASSY	BAFFLE	NOT ALLOWED	C	D	F
	DOOR	NOT ALLOWED	C	D	F
ANGLE ASSY	ANGLE (AL)	NOT ALLOWED	B	NOT ALLOWED	NOT ALLOWED
	ANGLE (TI)	NOT ALLOWED	B	NOT ALLOWED	NOT ALLOWED
FORMER ASSY	ATTACH ANGLE	NOT ALLOWED	B	NOT ALLOWED	NOT ALLOWED
	TEE CHORD	NOT ALLOWED	B	NOT ALLOWED	NOT ALLOWED
	HINGE SUPPORT	NOT ALLOWED	C	D	E
	TIE PLATE	NOT ALLOWED	C	D	F
COVER SUPPORT ASSY	CHANNEL	NOT ALLOWED	C	D	G
	WEB	NOT ALLOWED	C	D	F
	ZEE	NOT ALLOWED	C	D	G
	FORMER	NOT ALLOWED	C	D	F
UPPER DUCT WALL ASSY	DUCT SIDEWALL	NOT ALLOWED	C	D	F
	TEE	NOT ALLOWED	B	NOT ALLOWED	NOT ALLOWED
	ZEE	NOT ALLOWED	C	D	G
	FORMED ANGLE	NOT ALLOWED	A	D	E
	ATTACH ANGLE	NOT ALLOWED	B	NOT ALLOWED	NOT ALLOWED
LOWER DUCT WALL ASSY	DUCT SIDEWALL	NOT ALLOWED	C	D	F
	TEE	NOT ALLOWED	B	NOT ALLOWED	NOT ALLOWED
	DOUBLER	NOT ALLOWED	C	D	[illegible]
	CHANNEL	NOT ALLOWED	C	D	G
	STIFFENER	NOT ALLOWED	A	D	E
	ANGLE	NOT ALLOWED	A	D	E

ALLOWABLE DAMAGE FOR DETAIL I

Wing to Body Fairing Structure Allowable Damage
Figure 1 (Sheet 3)

228405

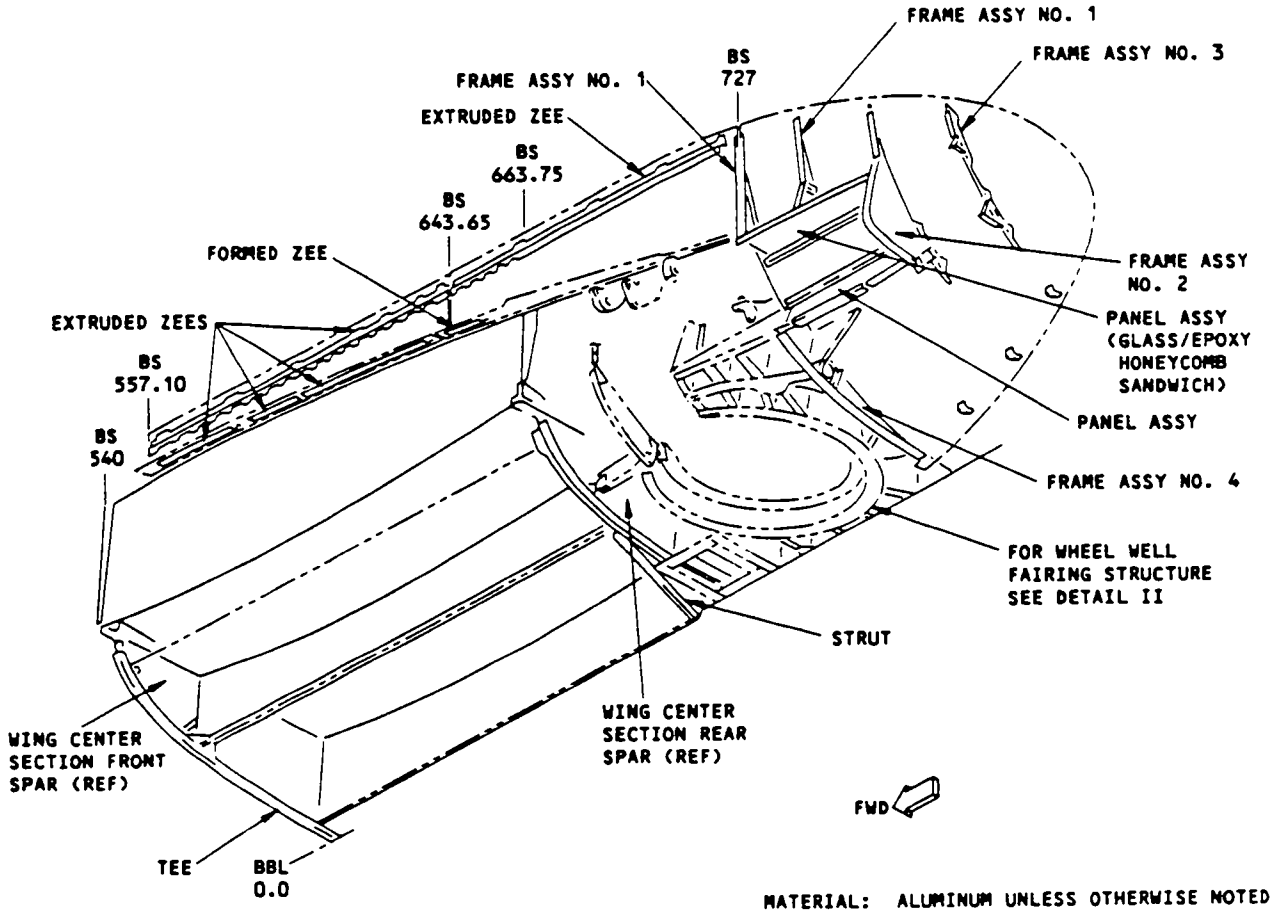

LEFT SIDE SHOWN
RIGHT SIDE OPPOSITE
DETAIL I

Wing to Body Fairing Structure Allowable Damage
Figure 1 (Sheet 4)

228398

DESCRIPTION			CRACKS	NICKS, GOUGES, SCRATCHES AND CORROSION	DENTS	HOLES AND PUNCTURES	DELAMINATION
PANEL ASSY (ALUMINUM)		WEB - BONDED	NOT ALLOWED	C	D	F	NOT ALLOWED
		TEE	NOT ALLOWED	B	NOT ALLOWED	NOT ALLOWED	-----
		FORMED ATTACH ANGLE	NOT ALLOWED	A	D	E	-----
PANEL ASSY GLASS/ EPOXY HONEYCOMB SANDWICH		GLASS FABRIC HONEYCOMB PANEL O	J	K	L	M	N
		TEE	NOT ALLOWED	B	NOT ALLOWED	NOT ALLOWED	-----
		FORMED ATTACH ANGLE	NOT ALLOWED	A	D	E	-----
FORMED ZEE			NOT ALLOWED	C	D	G	-----
EXTRUDED ZEE			NOT ALLOWED	B	NOT ALLOWED	NOT ALLOWED	-----
FRAME ASSY	1	WEB (ALUMINUM)	NOT ALLOWED	C	D	F	-----
		STIFFENER	NOT ALLOWED	B	NOT ALLOWED	E	-----
		TEE	NOT ALLOWED	B	NOT ALLOWED	NOT ALLOWED	-----
		FORMED ATTACH ANGLE	NOT ALLOWED	A	D	E	-----
		EXTRUDED ANGLE - LWR	NOT ALLOWED	B	NOT ALLOWED	NOT ALLOWED	-----
	2	GLASS FABRIC HONEYCOMB PANEL O	J	K	L	M	N
		TEE	NOT ALLOWED	B	NOT ALLOWED	NOT ALLOWED	-----
		CHANNEL	NOT ALLOWED	B	NOT ALLOWED	NOT ALLOWED	-----
		EXTRUDED ATTACH ANGLE	NOT ALLOWED	B	NOT ALLOWED	NOT ALLOWED	-----
	3	WEB (ALUMINUM)	NOT ALLOWED	C	D	F	-----
		TEE	NOT ALLOWED	B	NOT ALLOWED	NOT ALLOWED	-----
		EXTRUDED ANGLE	NOT ALLOWED	B	NOT ALLOWED	NOT ALLOWED	-----
	4	GLASS FABRIC LAMINATE O	J	K	NOT ALLOWED	M	N
		TEE	NOT ALLOWED	B	NOT ALLOWED	NOT ALLOWED	-----
		EXTRUDED ANGLE	NOT ALLOWED	B	NOT ALLOWED	NOT ALLOWED	-----
STRUT			NOT ALLOWED	B	NOT ALLOWED	NOT ALLOWED	-----
TEE			NOT ALLOWED	B	NOT ALLOWED	NOT ALLOWED	-----

ALLOWABLE DAMAGE FOR DETAIL II

Wing to Body Fairing Structure Allowable Damage
Figure 1 (Sheet 5)

228404

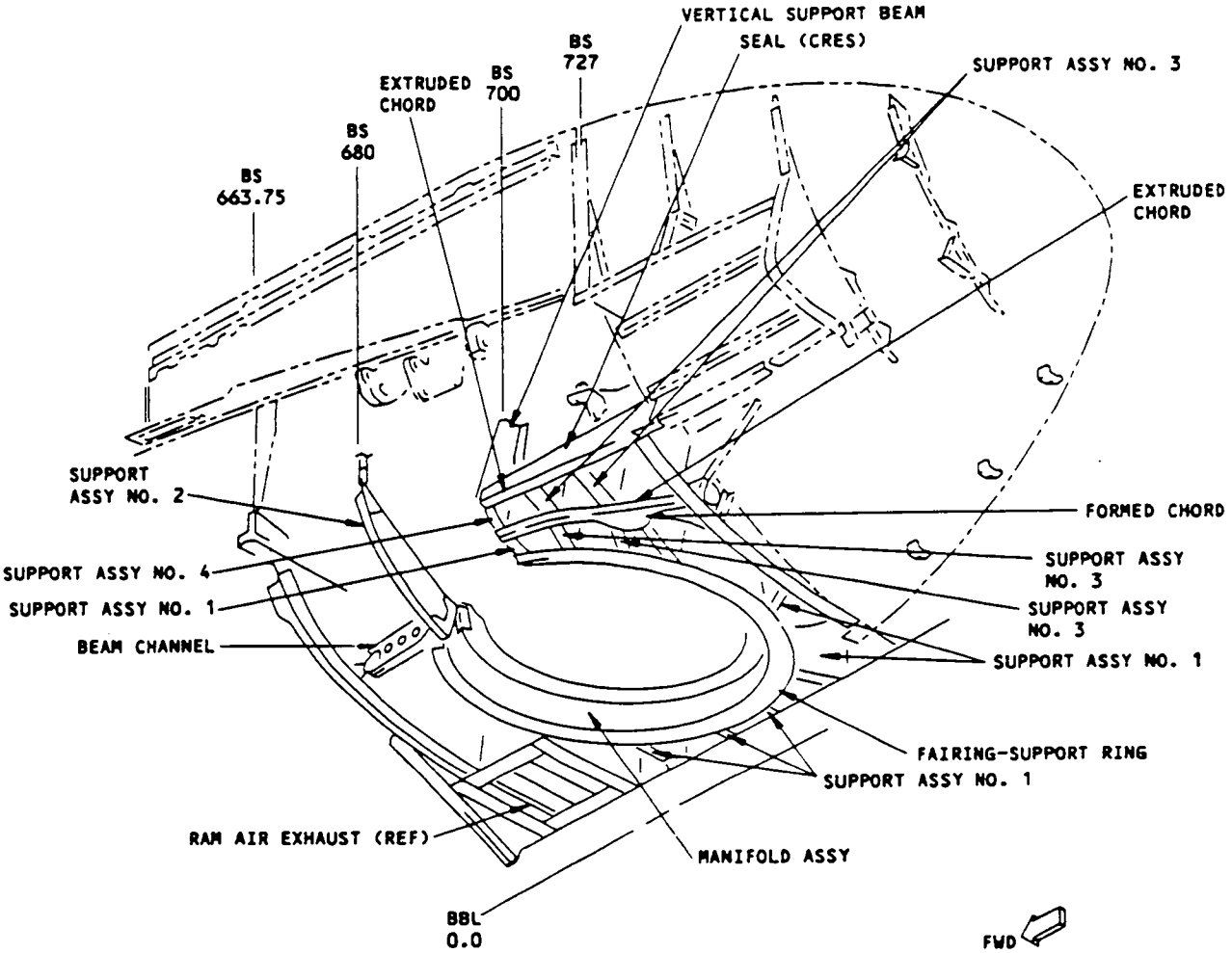

MATERIAL: ALUMINUM UNLESS OTHERWISE NOTED

LEFT SIDE SHOWN
RIGHT SIDE OPPOSITE
DETAIL II

Wing to Body Fairing Structure Allowable Damage
Figure 1 (Sheet 6)

228399

DESCRIPTION			CRACKS	NICKS, GOUGES, SCRATCHES AND CORROSION	DENTS	HOLES AND PUNCTURES
FAIRING - SUPPORT RING			NOT ALLOWED	A	NOT ALLOWED	NOT ALLOWED
VERTICAL SUPPORT BEAM			NOT ALLOWED	C	D	G
MANIFOLD ASSY		CHORD	NOT ALLOWED	B	NOT ALLOWED	NOT ALLOWED
		WEB	NOT ALLOWED	C	NOT ALLOWED	NOT ALLOWED
		LIP FAIRING	NOT ALLOWED	A	NOT ALLOWED	NOT ALLOWED
BEAM CHANNEL			NOT ALLOWED	C	D	G
SUPPORT ASSY	1	CHORD	NOT ALLOWED	B	NOT ALLOWED	NOT ALLOWED
		WEB	NOT ALLOWED	C	D	F
	2	CHORD	NOT ALLOWED	B	NOT ALLOWED	NOT ALLOWED
		CHANNEL	NOT ALLOWED	B	NOT ALLOWED	NOT ALLOWED
		WEB	NOT ALLOWED	C	D	F
	3	ANGLE	NOT ALLOWED	B	NOT ALLOWED	NOT ALLOWED
		TEE	NOT ALLOWED	B	NOT ALLOWED	NOT ALLOWED
		WEB	NOT ALLOWED	C	D	F
	4	ANGLE	NOT ALLOWED	B	NOT ALLOWED	NOT ALLOWED
		TEE	NOT ALLOWED	B	NOT ALLOWED	NOT ALLOWED
FORMED CHORD			NOT ALLOWED	A	NOT ALLOWED	NOT ALLOWED
EXTRUDED CHORD			NOT ALLOWED	B	NOT ALLOWED	NOT ALLOWED
SEAL (CRES)			NOT ALLOWED	B	NOT ALLOWED	NOT ALLOWED

ALLOWABLE DAMAGE FOR DETAIL III

Wing to Body Fairing Structure Allowable Damage
Figure 1 (Sheet 7)

228403

NOTES

- THE ALLOWABLE DAMAGE LIMITS GIVEN IN THIS FIGURE WILL NOT HAVE AN EFFECT ON A STRUCTURALLY SIGNIFICANT ITEM (SSI) GIVEN IN SRM 51-00-4, FIG. 3. THUS, NO CHANGE TO THE SUPPLEMENTAL STRUCTURAL INSPECTION DOCUMENT (SSID) INSPECTION PROGRAM IS NECESSARY.
- REFER TO SRM 51-10-1 FOR INVESTIGATION AND CLEANUP OF DAMAGE.
- FOR REWORKED ALUMINUM SURFACES APPLY A CHEMICAL CONVERSION COATING AS GIVEN IN SRM 51-10-2.
- REFINISH REWORKED AREAS AS GIVEN IN AMM 51-20.
- D = FASTENER DIAMETER.
- CADMIUM PLATE REWORKED STEEL SURFACES AS GIVEN IN SOPM 20-42-10 AND APPLY TWO LAYERS OF BMS 10-11, TYPE 1 PRIMER.
- FOR REWORKED TITANIUM SURFACES, APPLY TWO LAYERS OF BMS 10-11, TYPE I PRIMER.
- NICKS, GOUGES, AND SCRATCHES THAT DO NOT GO ALL THE WAY THROUGH CLAD SURFACES ARE PERMITTED. INSPECT PENETRATION DEPTH AS GIVEN IN SRM 51-10-2.

[A] REMOVE NICKS, GOUGES, SCRATCHES, OR CORROSION AS SHOWN IN DETAILS IV, V, VII, AND VIII.

[B] REMOVE NICKS, GOUGES, SCRATCHES, OR CORROSION AS SHOWN IN DETAILS IV, V, VI, VII, AND VIII.

[C] REMOVE NICKS, GOUGES, SCRATCHES, OR CORROSION AS SHOWN IN DETAILS IV, V, VI, VII, AND IX.

[D] DENTS ARE PERMITTED AS SHOWN IN DETAIL XI. DENTS SHALL NOT EXTEND ACROSS ANY ATTACHED STRUCTURE.

[E] HOLES AND PUNCTURES ARE PERMITTED ONLY IN FREE FLANGE AS SHOWN IN DETAIL X.

[F] HOLES AND PUNCTURES ARE PERMITTED UP TO 0.25 INCH MAXIMUM DIAMETER AFTER CLEANUP PROVIDED DAMAGE IS 1.00 INCH MINIMUM FROM ANY OTHER HOLE, PART EDGE, OR OTHER DAMAGE. CLEAN UP DAMAGE AND FILL WITH A 2117-T3 OR 2117-T4 ALUMINUM PROTRUDING HEAD RIVET INSTALLED WET WITH BMS 5-95 SEALANT.

[G] HOLES AND PUNCTURES ARE PERMITTED IN FREE FLANGES AS SHOWN IN DETAIL X. HOLES AND PUNCTURES ARE ALLOWED IN WEBS UP TO 0.25 INCH MAXIMUM DIAMETER AFTER CLEANUP PROVIDED DAMAGE IS 1.0 INCH FROM ANY OTHER HOLE, PART EDGE, OR OTHER DAMAGE. CLEAN UP DAMAGE AND FILL WITH A 2117-T3 OR 2117-T4 ALUMINUM PROTRUDING HEAD RIVET INSTALLED WET WITH BMS 5-95 SEALANT.

[H] PROTECT DAMAGE FROM ENTRANCE OF WATER OR OTHER FOREIGN MATTER BY SEALING WITH ALUMINUM FOIL TAPE (SPEED TAPE) 3M-Y436 OR EQUIVALENT. RECORD LOCATION AND INSPECT AT AIRPLANE "A" CHECK. REPLACE ALUMINUM FOIL TAPE IF ANY PEELING OR DETERIORATION OF TAPE IS EVIDENT. REPAIR DAMAGE NO LATER THAN THE NEXT "C" CHECK.

[I] PROTECT DAMAGE WITH ALUMINUM FOIL TAPE (SPEED TAPE) 3M-Y436 OR EQUIVALENT. RECORD LOCATION AND INSPECT AT EVERY AIRPLANE "A" CHECK. REPLACE ALUMINUM FOIL TAPE IF ANY PEELING OR DETERIORATION OF TAPE IS EVIDENT. REPAIR DAMAGE IF IT PROPAGATES BEYOND THE ALLOWABLE DAMAGE LIMITS.

[J] CLEAN UP EDGE CRACKS AS SHOWN IN DETAILS IV AND IX. CRACKS UP TO 1.50 INCH MAXIMUM LENGTH ARE ALLOWED PROVIDED DAMAGE IS 6.00 INCH MINIMUM FROM ANY OTHER DAMAGE AND 2.00 INCH MINIMUM FROM ANY HOLE (EXCEPT FOR HOLE DAMAGE) OR PART EDGE [H].

[K] IF FIBERS ARE DAMAGED, TREAT AS A CRACK. IF FIBERS ARE NOT DAMAGED, PROTECT AS GIVEN IN NOTE [H].

[L] DENTS GENERALLY RESULT IN FIBER DAMAGE OR DELAMINATION THAT MAY NOT BE APPARENT USING VISUAL OR TAP TESTING METHODS OF DETECTION. DENTS ARE ALLOWED UP TO 1.00 INCH MAXIMUM DIAMETER PROVIDED DAMAGE IS 6.00 INCH MINIMUM (EDGE TO EDGE) FROM ANY OTHER DAMAGE, DAMAGE IS 2.00 INCH MINIMUM (EDGE TO EDGE) FROM ANY HOLE (EXCEPT FOR HOLE DAMAGE) OR PART EDGE, AND THERE IS NO FIBER DAMAGE OR DELAMINATION. PROTECT DAMAGE AS GIVEN IN NOTE [H]. IF THERE IS FIBER DAMAGE, TREAT AS A CRACK. IF THERE IS DELAMINATION, TREAT AS DELAMINATION.

[M] HOLES AND PUNCTURES ARE ALLOWED UP TO 1.00 INCH MAXIMUM DIAMETER PROVIDED DAMAGE IS 6.00 INCH MINIMUM (EDGE TO EDGE) FROM ANY OTHER DAMAGE AND 2.00 INCH MINIMUM (EDGE TO EDGE) FROM ANY HOLE (EXCEPT FOR HOLE DAMAGE) OR PART EDGE. DO NOT CLEAN UP DAMAGE EXCEPT TO REMOVE RESIN BURRS EXTENDING INTO THE SURFACE CONTOUR [H].

[N] DELAMINATION IS ALLOWED UP TO 1.00 INCH MAXIMUM DIAMETER PROVIDED DAMAGE IS 6.00 INCH MINIMUM (EDGE TO EDGE) FROM ANY OTHER DAMAGE AND 1.00 INCH MINIMUM (EDGE TO EDGE) FROM ANY HOLE (EXCEPT FOR HOLE DAMAGE) OR PART EDGE. PROTECT DAMAGE AS GIVEN IN [I]. DELAMINATION FROM THE EDGE IS ALLOWED UP TO 0.10 MAXIMUM. PROTECT EDGE DAMAGE AS GIVEN IN NOTE [H].

[O] DAMAGE TO FASTENER HOLES DUE TO OVALIZATION, FASTENER PULL-THROUGH, OR CRACKS OUT OF FASTENER HOLE IS ALLOWED TO ONE FASTENER HOLE IN SIX PROVIDED THE TOTAL DAMAGE DOES NOT EXCEED 10% OF THE EDGEBAND LENGTH ON EACH SIDE.

Wing to Body Fairing Structure Allowable Damage
Figure 1 (Sheet 8)

BOEING PROPRIETARY - Copyright © - Unpublished Work - See title page for details.

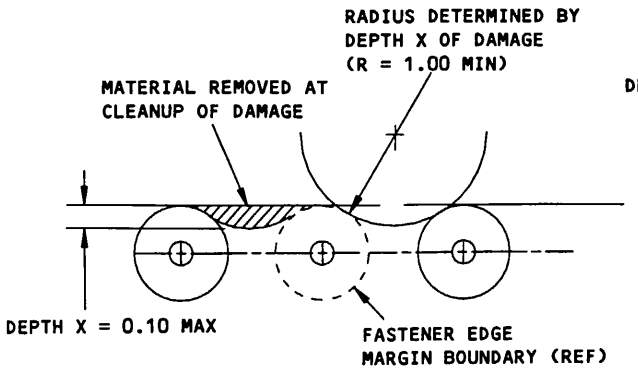

DAMAGE CLEANUP OF EDGES WHERE
FASTENER EDGE MARGINS DO NOT OVERLAP

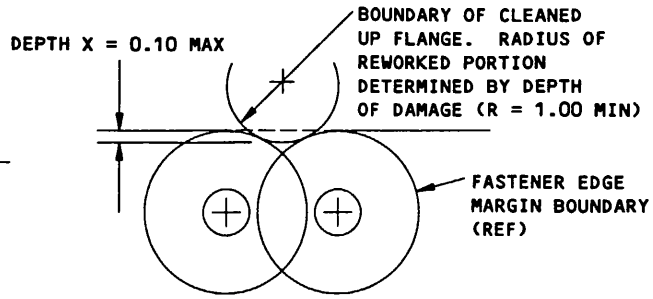

DAMAGE CLEANUP OF EDGES WHERE
FASTENER EDGE MARGINS OVERLAP

DETAIL IV

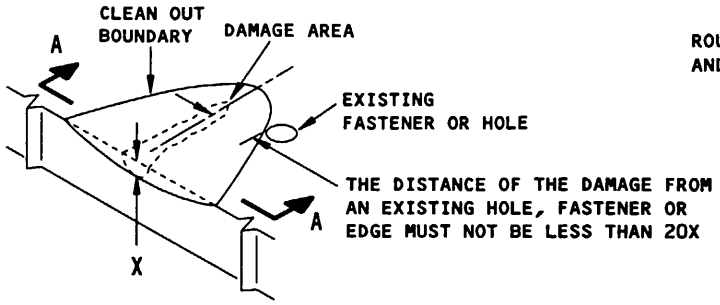

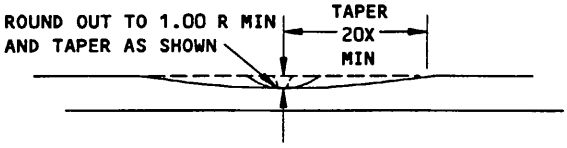

X = DEPTH OF CLEANUP
= 10% OF THICKNESS MAX

SECTION A-A

REMOVAL OF NICK, GOUGE, CORROSION AND SCRATCH DAMAGE ON A SURFACE

DETAIL V

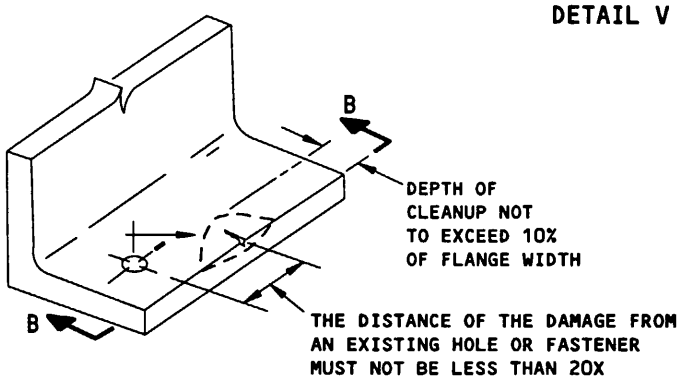

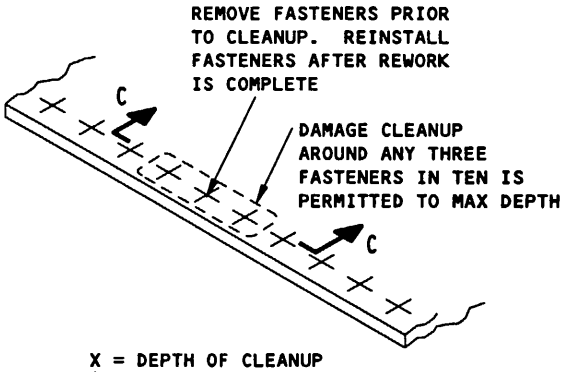

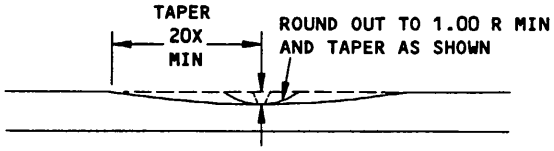

X = DEPTH OF CLEANUP
= 10% THICKNESS MAX

SECTION B-B

REMOVAL OF DAMAGE ON AN EDGE
DETAIL VI

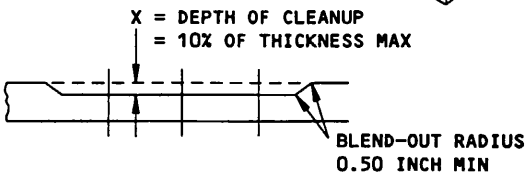

SECTION C-C

DAMAGE CLEANUP
DETAIL VII

Wing to Body Fairing Structure Allowable Damage
Figure 1 (Sheet 9)

BOEING PROPRIETARY - Copyright © - Unpublished Work - See title page for details.

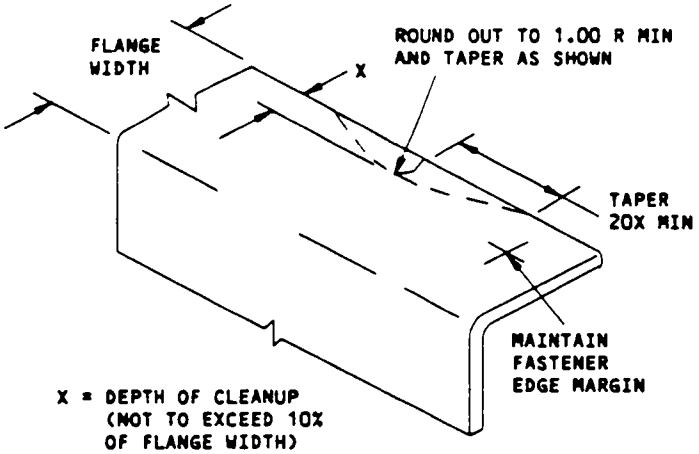

REMOVAL OF DAMAGE ON AN EDGE
DETAIL VIII

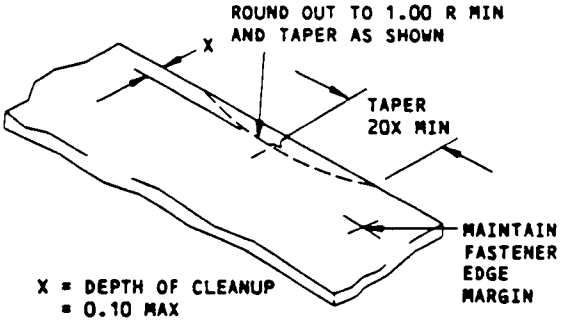

REMOVAL OF DAMAGE ON AN EDGE
DETAIL IX

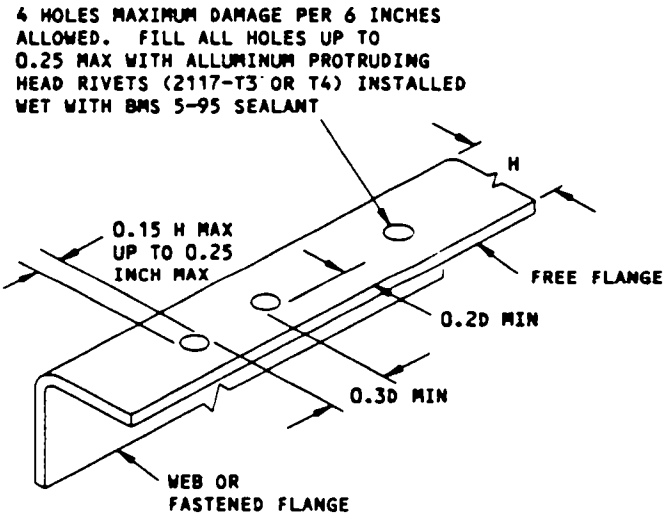

NOTE: NO HOLE DAMAGE ALLOWED IN FASTENED FLANGES

ALLOWABLE DAMAGE LIMITS FOR
HOLES IN FREE FLANGE
DETAIL X

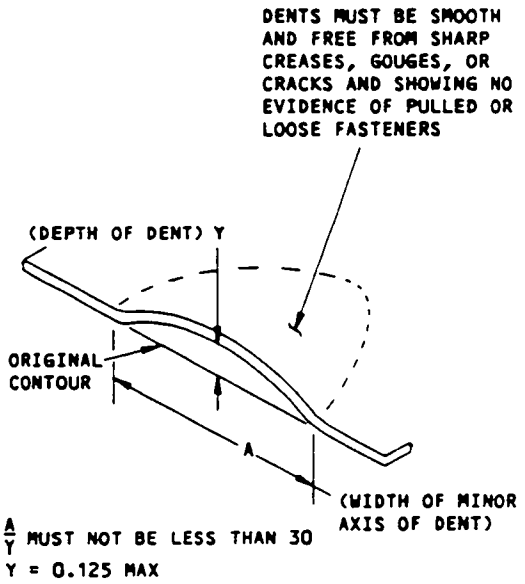

ALLOWABLE DAMAGE FOR DENT
DETAIL XI

Wing to Body Fairing Structure Allowable Damage
Figure 1 (Sheet 10)

228401

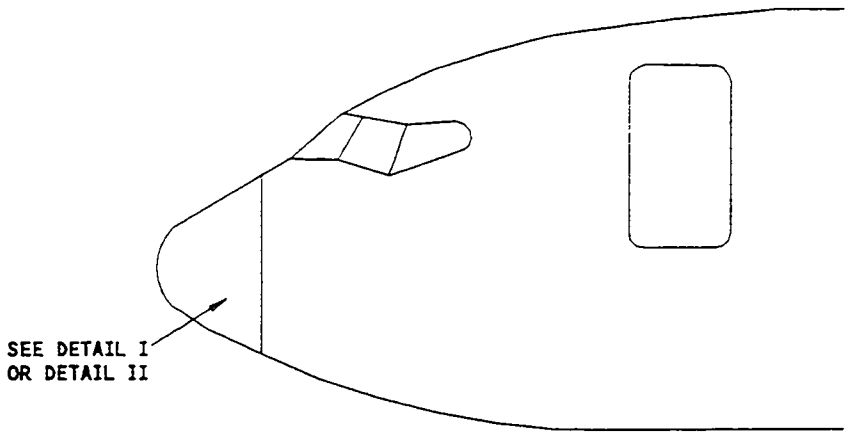

Nose Radome Allowable Damage
Figure 2 (Sheet 1)

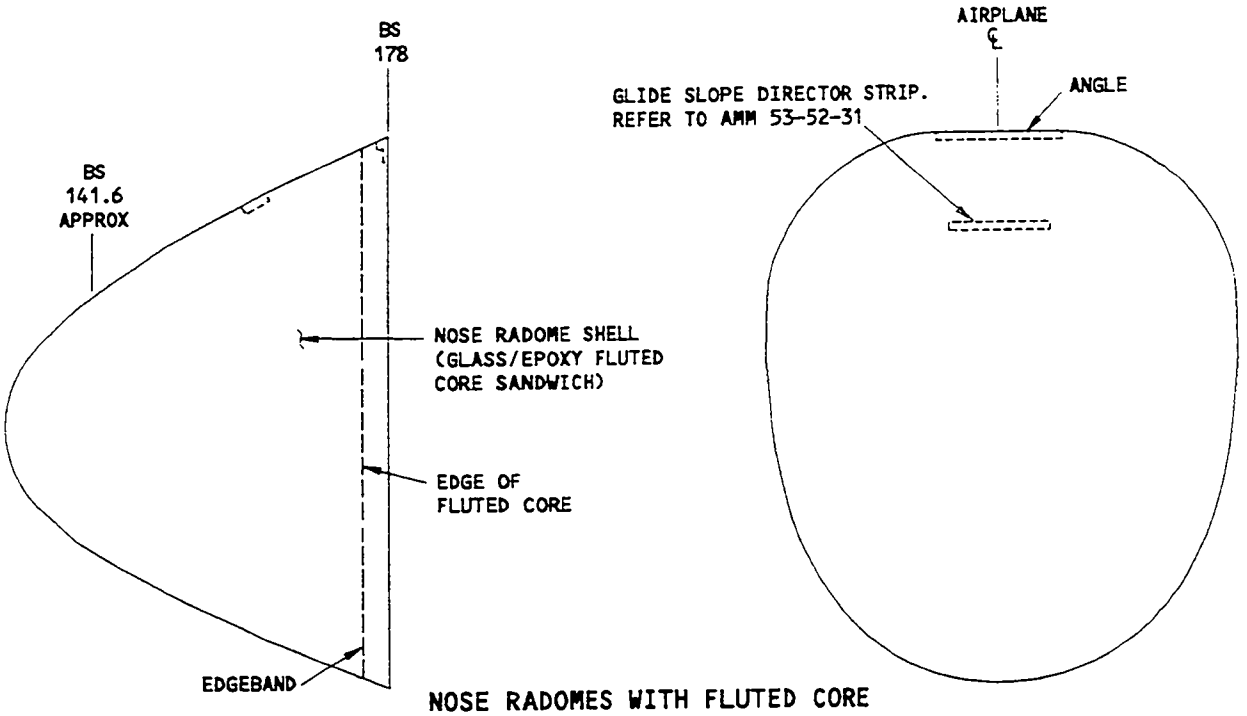

NOSE RADOMES WITH FLUTED CORE
DETAIL I

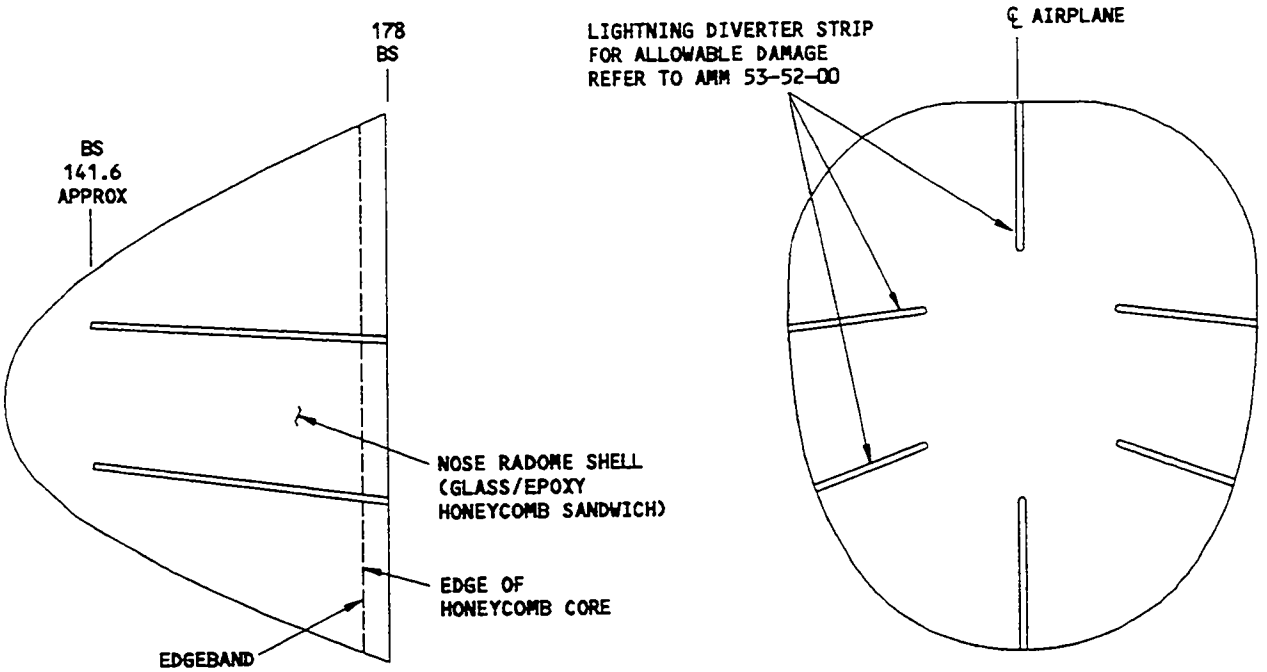

NOSE RADOMES WITH HONEYCOMB CORE
DETAIL II

Nose Radome Allowable Damage
Figure 2 (Sheet 2)

DESCRIPTION	CRACKS	NICKS, GOUGES, AND SCRATCHES	DENTS	HOLES AND PUNCTURES	DELAMINATION
NOSE RADOME SHELL-FLUTED CORE	A	B C	B C	B C	B C
NOSE RADOME SHELL-HONEYCOMB CORE	A	B C D	B C D	B C D	B C D

NOTES

- THE ALLOWABLE DAMAGE LIMITS GIVEN IN THIS FIGURE WILL NOT HAVE AN EFFECT ON A STRUCTURALLY SIGNIFICANT ITEM (SSI) GIVEN IN SRM 51-00-4, FIG. 3. THUS, NO CHANGE TO THE SUPPLEMENTAL STRUCTURAL INSPECTION DOCUMENT (SSID) INSPECTION PROGRAM IS NECESSARY.
- REFER TO SRM 51-10-01 FOR THE INVESTIGATION AND CLEANUP OF DAMAGE.
- REFER TO AMM 51-20 TO APPLY THE FINISH TO THE REWORKED AREA.
- REFER TO SRM 51-70 FOR AERODYNAMIC SMOOTHNESS REQUIREMENTS.
- NO MORE THAN ONE FASTENER HOLE IN SIX CAN BE CRACKED OR DAMAGED. THE TOTAL LENGTH OF THE DAMAGE MUST NOT BE MORE THAN 10% OF THE LENGTH OF THE EDGEBAND ON THAT SIDE.

A REMOVE THE CRACKS ON THE EDGE AS SHOWN IN DETAIL III. OTHER CRACKS ARE NOT PERMITTED.

B DAMAGE THAT IS LESS THAN 1 SQUARE INCH IS PERMITTED IF:

- THE DAMAGE IS MORE THAN 2 INCHES FROM AN EDGE OR A FASTENER ON THE EDGE
- THE DAMAGE IS MORE THAN 10 INCHES FROM OTHER DAMAGE.

C IF YOU DO NOT REPAIR THE DAMAGE, THEN SEAL THE DAMAGE WITH NONMETALLIC SCOTCHBRAND 850 OR 853 TAPE. IF YOU MAKE AN OVERLAP OF MORE THAN 3 LAYERS OF TAPE YOU WILL DECREASE THE PERFORMANCE OF THE RADAR. THE REWORK IS SATISFACTORY IF THE GROUND PERFORMANCE OF THE RADAR IS SATISFACTORY. KEEP A RECORD OF THE LOCATION OF THE DAMAGE.

D REMOVE THE MOISTURE FROM THE DAMAGED AREA. REFER TO SRM 53-50-4, PAR. 4.

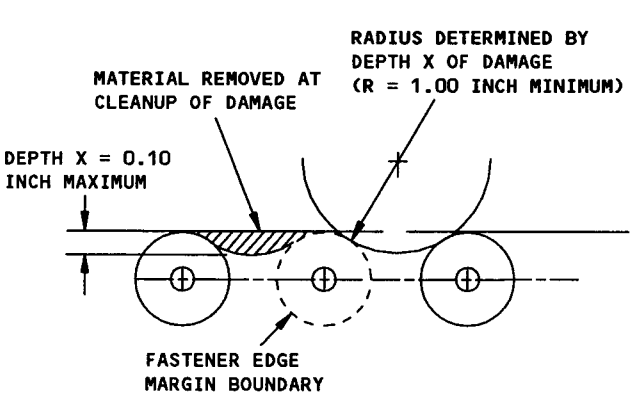

DAMAGE CLEANUP OF EDGES WHERE FASTENER EDGE MARGINS DO NOT OVERLAP

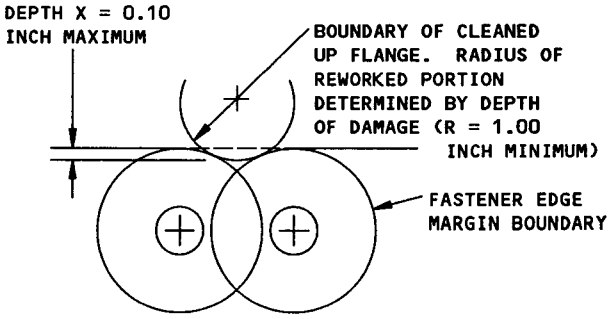

DAMAGE CLEANUP OF EDGES WHERE FASTENER EDGE MARGINS OVERLAP

DETAIL III

Nose Radome Allowable Damage
Figure 2 (Sheet 3)

BOEING PROPRIETARY - Copyright © - Unpublished Work - See title page for details.

SERVICE BULLETIN REPAIRS - CONES AND FILLET/FAIRING STRUCTURE

The following Service Bulletins contain repairs which are available for use where specific damage has been encountered. Usually, the Service Bulletin also covers preventive modification data which operators are encouraged to use to eliminate the need for repair.

DAMAGED AREA	CUM LINE NUMBER EFFECTIVITY [A]	SB NUMBER
FUSELAGE - WING-TO-BODY DRAG ANGLE INSPECTION AND REPLACEMENT	1 THRU 316	737-53-1031
TEE FORMER IN THE BS 535 WING-TO-BODY FAIRING SUPPORT STRUCTURE	1 THRU 1279	737-53-1098

[A] FOR AIRPLANES ON WHICH PREVENTIVE MODIFICATION HAS NOT BEEN ACCOMPLISHED

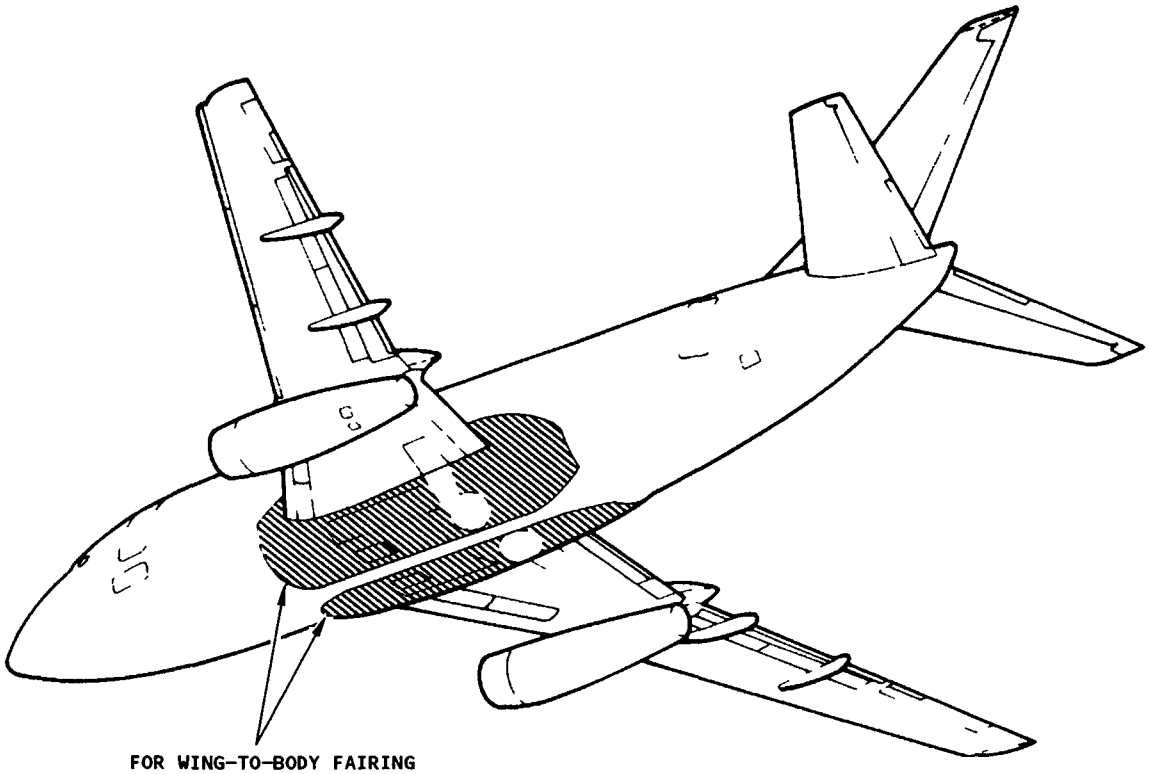

FOR WING-TO-BODY FAIRING STRUCTURE REPAIRS SEE DETAIL I, II, III AND IV

NOTES

- THESE REPAIRS WILL NOT HAVE AN EFFECT ON A STRUCTURALLY SIGNIFICANT ITEM (SSI) GIVEN IN SRM 51-00-4, FIG. 3. THUS, NO CHANGE TO THE SUPPLEMENTAL STRUCTURAL INSPECTION DOCUMENT (SSID) INSPECTION PROGRAM IS NECESSARY.
- REFER TO SRM 51-10 FOR INVESTIGATION AND CLEANUP OF DAMAGE.
- REFER TO SRM 51-70 FOR AERODYNAMIC SMOOTHNESS REQUIREMENTS, WHERE THE DAMAGE EXCEEDS THE LIMITS SHOWN IN SRM 51-70 CONSIDERATION SHOULD BE GIVEN TO THE LOSS OF PERFORMANCE INVOLVED.
- REFINISH REWORKED AREAS AS GIVEN IN AMM 51-20.

[A] REFER TO SRM 51-40-2, SRM 51-40-3 AND SRM 51-40-4 FOR TYPICAL WEB REPAIRS, TYPICAL FORMED SECTION REPAIRS AND TYPICAL EXTRUDED SECTION REPAIRS. THESE TYPICAL REPAIRS MAY BE USED WHEREVER APPLICABLE, PROVIDED THAT ADEQUATE SPACE IS AVAILABLE FOR INSTALLATION OF THE REPAIR PARTS, WITH NO INTERFERENCE FROM ADJACENT STRUCTURE. SOME OF THE TYPICAL REPAIRS MUST NOT BE USED IN CERTAIN AREAS OF THE AIRPLANE, AS NOTED IN THE TYPICAL REPAIR FIGURES. REFER TO THE USAGE LIMITATIONS IN THE TYPICAL REPAIR FIGURES BEFORE BEGINNING A REPAIR.

[B] FOR 737-100 AIRPLANES.

[C] FOR 737-200 AIRPLANES.

Wing to Body Fairing Structure Repairs
Figure 1 (Sheet 1)

BOEING PROPRIETARY - Copyright © - Unpublished Work - See title page for details.

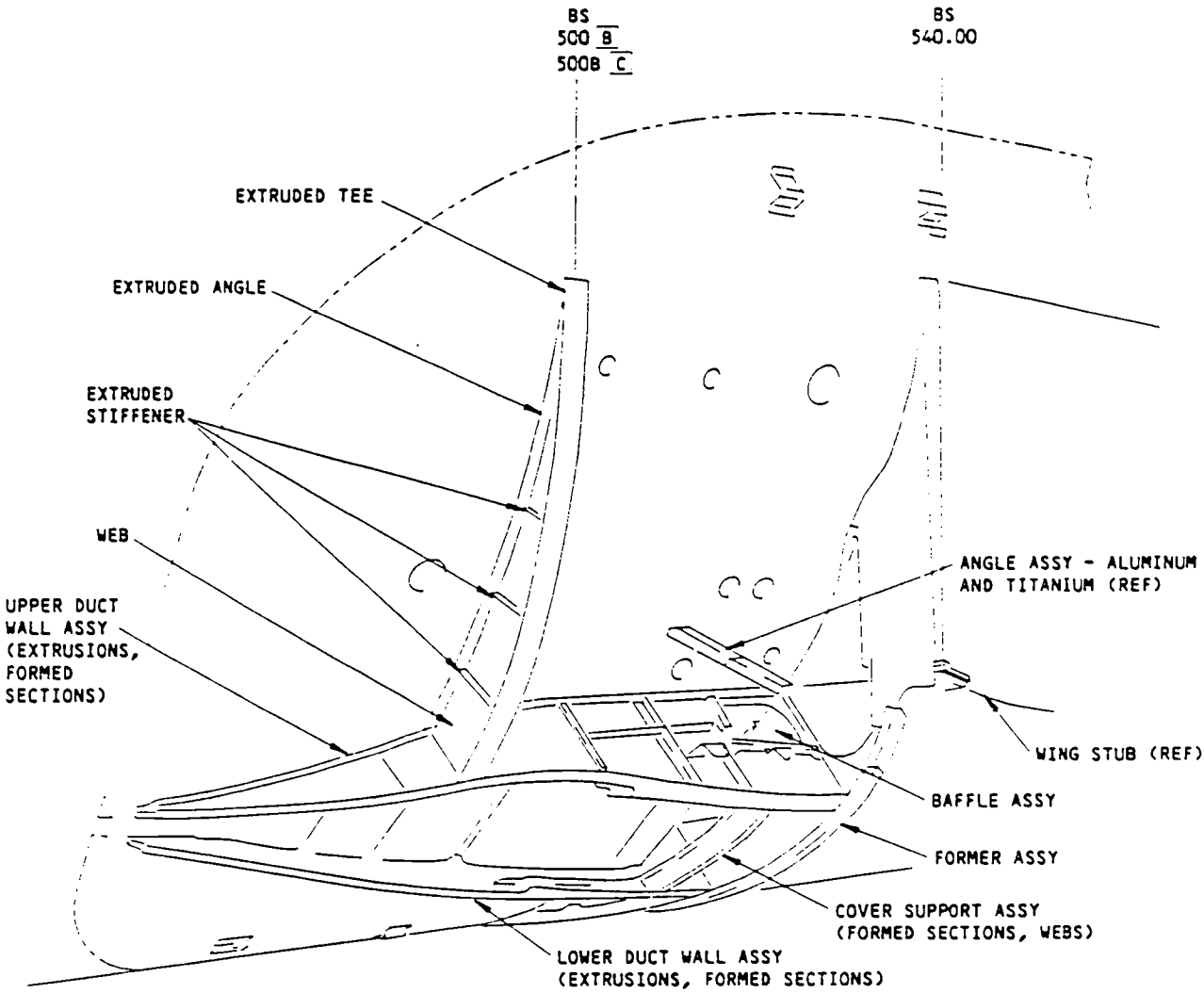

MATERIAL: ALUMINUM EXCEPT AS NOTED

DETAIL I A

Wing to Body Fairing Structure Repairs
Figure 1 (Sheet 2)

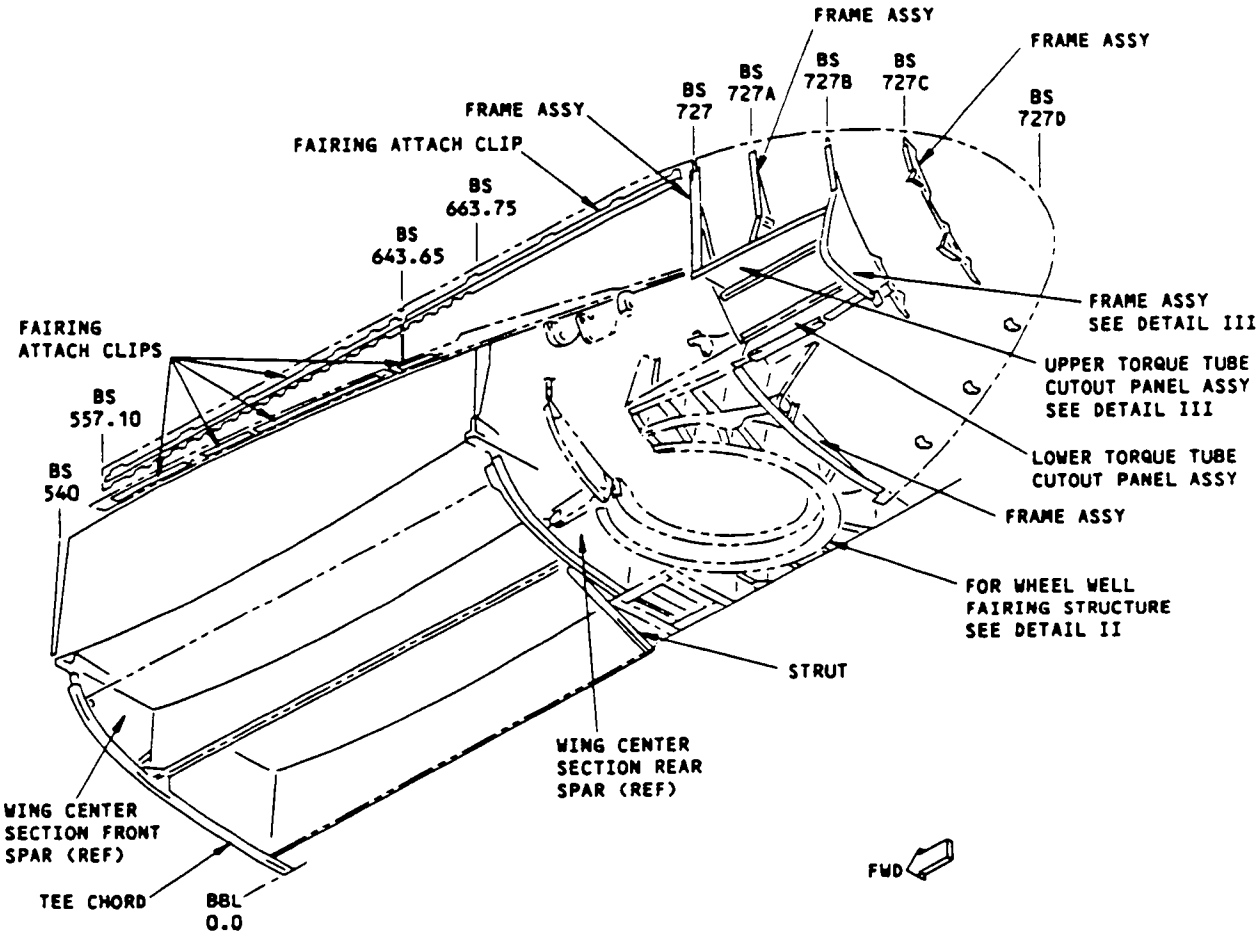

LEFT SIDE SHOWN
RIGHT SIDE OPPOSITE
DETAIL II [A]

Wing to Body Fairing Structure Repairs
Figure 1 (Sheet 3)

228409

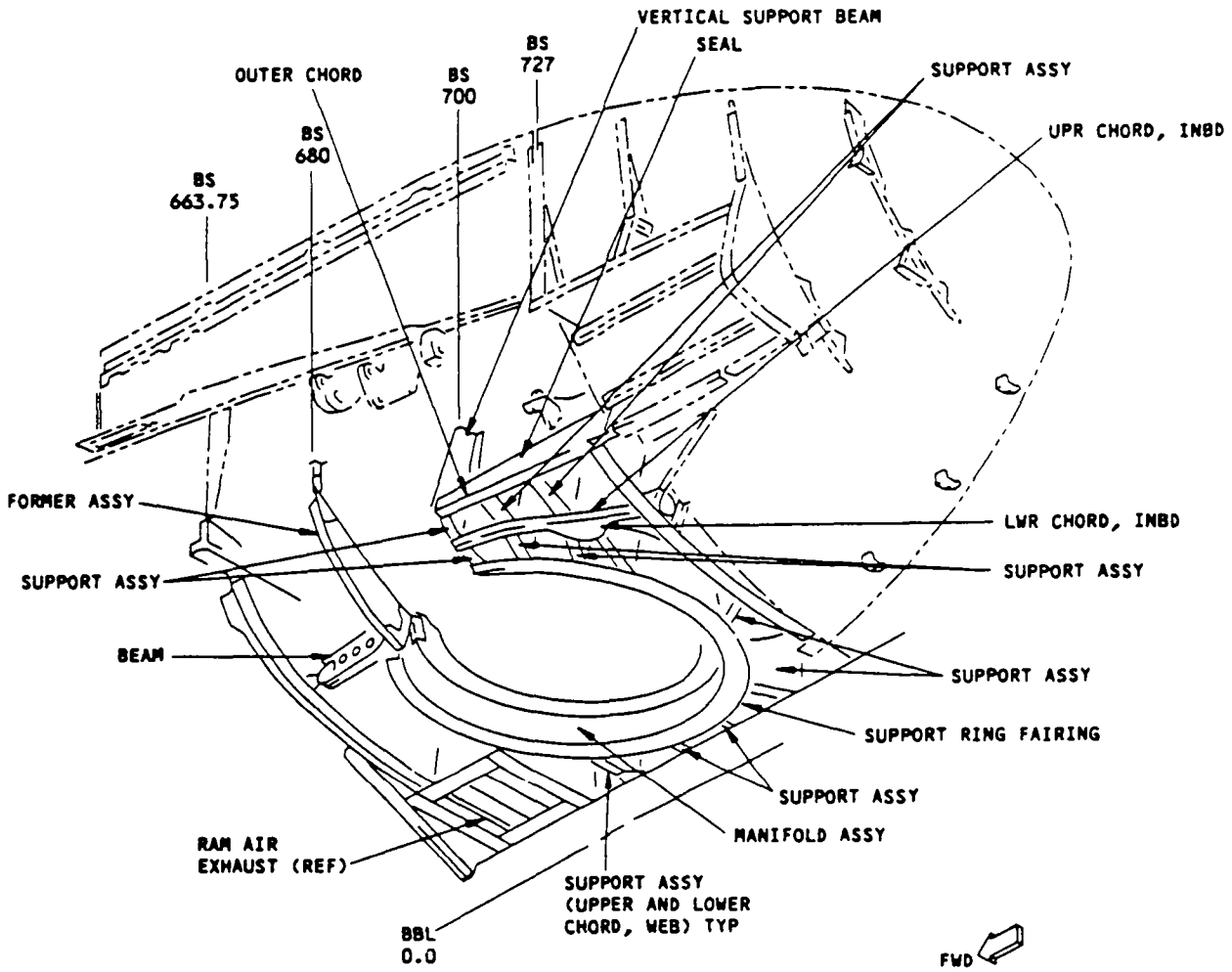

LEFT SIDE SHOWN
RIGHT SIDE OPPOSITE
DETAIL III [A]

Wing to Body Fairing Structure Repairs
Figure 1 (Sheet 4)

228408

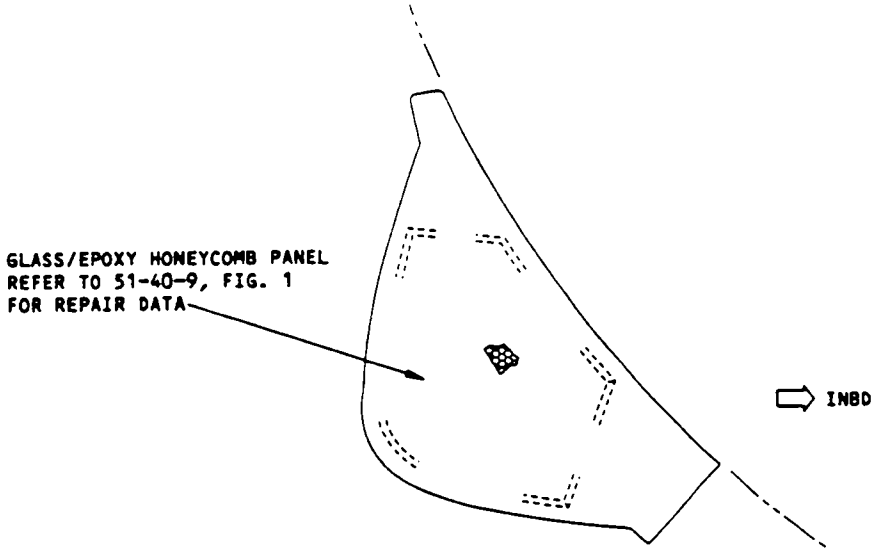

VIEW ON FRAME WEB ASSY
AT BS 767 [B] OR BS 727B [C]

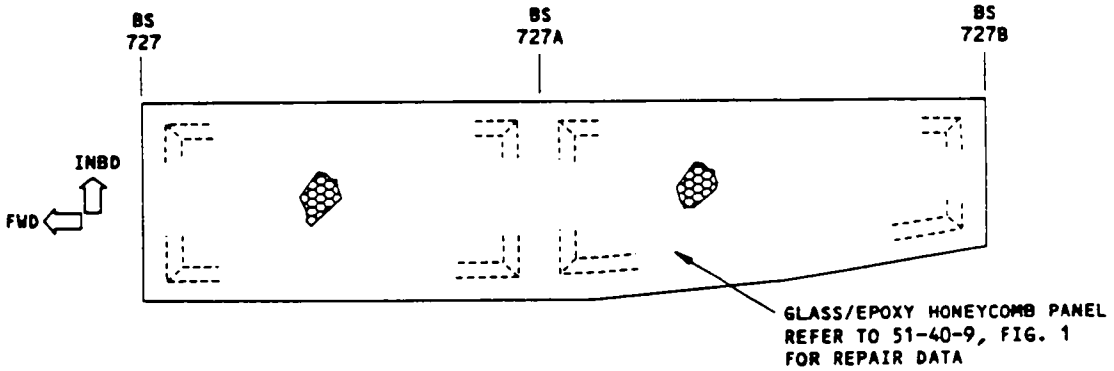

VIEW ON UPPER PANEL

DETAIL IV

Wing to Body Fairing Structure Repairs
Figure 1 (Sheet 5)

228410

APPLICABILITY
THIS REPAIR SECTION IS APPLICABLE AND APPROVED FOR THE REPAIR OF RADOMES AS DELIVERED OR APPROVED BY BOEING FOR USE ON THIS MODEL AIRPLANE. REPAIRS THAT ARE MADE FROM THIS REPAIR SECTION ARE NOT APPROVED FOR RADOMES THAT HAVE BEEN MODIFIED, REBUILT OR RE-RINGED USING PROCESSES AND MATERIALS THAT HAVE NOT BEEN APPROVED BY BOEING FOR USE ON THIS MODEL AIRPLANE.

NOSE RADOME REPAIR

1. General

A. This subject gives repair data for the X-Band and C-Band radomes with honeycomb core.

NOTE: These repairs will not have an effect on a structurally significant item (SSI) given in SRM 51-00-4, Fig. 3. Thus, no change to the Supplemental Structural Inspection Document (SSID) inspection program is necessary.

B. On the inner surface of the radome, keep a record of damage and repair.

C. For repairs to C-Band radomes with fluted core, refer to Heath-Techna Corp., Precision Structures Div., 19819 - 84th Avenue South, Kent, Washington 90831.

D. For 3-ply honeycomb radomes, a test for the electrical transmission efficiency is not necessary for most of the repairs given in this subject.

(1) A test can be necessary after you complete paragraphs 4, 6 and 7. Refer to the limits as given in Figure 3 to find if a test is necessary.

(a) If a test is not necessary, then the radome is a Class D radome.

(2) A test is not necessary when you do paragraph 5 and paragraphs 8 thru 15.

(a) After this test is complete, the nose radome is classified as a Class D radome.

E. For 4-ply honeycomb radomes and foam core radomes, a test for the electrical transmission efficiency is not necessary for all of the repairs given in this subject.

NOTE: After you do a repair, these radomes are classified as Class C radomes. You can do a test to find if the radome has better electrical transmission efficiency.

A rain erosion coating must cover the boot area from STA 130 to STA 141.60 before the test is made. Apply the coating as specified in 51-21 of the Maintenance Manual. Copies of ATC RTCA/DO-213 revised June 23, 1995 are available from: RTCA Inc., 1140 Connecticut Ave. N.W., Suite 1020, Washington, D.C. 20036.

For repaired radomes on airplanes that have Predictive Wind Shear (PWS), and that are finished with CAAPCO erosion and p-static protection (Caapcoat B-274 as specified in BAC5990 and Caapcoat AS-P108, do a transmission efficient test. The efficiency test must shoe the radome to be Class C or better.

BOEING PROPRIETARY - Copyright © - Unpublished Work - See title page for details.

F. Refer to par. 4 to remove moisture from the radome honeycomb structure.

G. Refer to par. 13 for repair of damage caused by electrical discharge.

H. Refer to par. 14 for small repairs.

I. Refer to par. 6 for wet layup repairs.

J. Refer to par. 7 for preimpregnated (prepreg) material repairs.

K. Refer to SRM 51-10-1 for the investigation and cleanup of damage.

L. Refer to SRM 51-70 for aerodynamic smoothness requirements. If the damage is more than the limits shown in SRM 51-70, performance will decrease.

M. Refer to SRM 51-20-3 for a list of repair materials and sources.

N. Refer to SRM 51-70 for aerodynamic smoothness requirements. If the damage is more than the limits shown in SRM 51-70, performance will decrease.

O. Refer to SRM 51-20-3 for a list of repair materials and sources.

P. For nose radome removal instructions, refer to AMM 53-15-0.

Q. For protective treatment of metallic and graphite materials, refer to SRM 51-10-2.

R. For repair sealing, refer to SRM 51-20-4.

S. Keep rolls or precut kits of prepreg and adhesive material below 10°F (-22°C) in sealed moisture proof bags. Include an identification label in the bag with this information: BMS Type, Class, Grade, supplier name, batch number, roll number, prepreg lot number, and date of kit preparation. Keep a record of storage time in and out of refrigeration.

T. Repair Precautions

(1) Keep the repair area ventilated. Keep moisture, dust, oil mist and other particulate matter from the prepreg and adhesive materials.

(2) Do not breathe vapors from the prepreg or adhesive materials or from the cleaning fluids.

(3) Wear protective gloves and clothing to prevent contamination of skin, eyes, or clothing with prepreg or adhesive materials or cleaning solvents.

(4) Wear approved dust mask and safety glasses if you cut, sand, or abrasive blast composite structure. If possible, use a vacuum pickup if you do these operations.

(5) The solvents and finishes are flammable. Keep them away from heat and flame.

U. Equipment

(1) Vacuum systems must have the capacity to keep a minimum vacuum of 22 inches of mercury.

BOEING PROPRIETARY - Copyright © - Unpublished Work - See title page for details.

(2) Have refrigerated storage below 10°F (-22°C) available for prepreg and adhesive material.

(3) Heating blankets must have the capacity for a controlled rate of temperature increase of 2 to 8°F (1 to 4°C) per minute to a temperature of 255 ±10°F (124 ±6°C).

2. Repair Limits, Preparation of Resins, and Curing of Repairs

A. For repair limits refer to Fig. 3.

B. For resin specifications and mixing procedures refer to Fig. 4.

C. For curing of the repair refer to Fig. 5.

3. Find the Range of Damage

CAUTION: DO NOT USE CHEMICAL PAINT STRIPPERS TO REMOVE PAINT BEFORE YOU FIND THE RANGE OF THE DAMAGE. CHEMICAL PAINT STRIPPERS WILL CAUSE DAMAGE TO THE RESIN SYSTEM.

A. Examine the area visually to find the range of the damage.

B. Examine the area around the damage for the entry of water, oil fuel, dirt or other unwanted material. You can find if there is water in the damaged area with radiographic inspection procedures. Remove the unwanted material from the damaged area. Refer to par. 4 for the instructions to remove water.

C. Examine the area around the damage for delamination. Use one of the procedures that follows:

(1) Use instrumented nondestructive inspection (NDI) procedures. Refer to NDT Part 4, 51-00-02.

(2) If NDI equipment is not available, use the tap test procedure. Hit the damaged area lightly with a solid metal disk. An area with a delamination will have a dull sound when you hit it lightly. An area with no delaminations will have a sharp sound.

4. Moisture Removal from Radome Honeycomb Structure

A. Remove moisture from the honeycomb structure as specified in par. 4.B. and C. Paragraph 4.B. gives an extra ply repair procedure and par. 4.C. gives a skin replacement repair procedure.

NOTE: For repair limits and test requirements see Fig. 3. Find water entrances and repair as specified in subsequent paragraphs of this repair subject.

B. Moisture removal by cover ply procedure (refer to Fig. 8):

(1) Find the range of moisture contamination using X-Ray and/or moisture detector (Model A8-AF, Data Tech Co.).

(2) Mask off an area on the inner surface 2.0 inches larger all around than the moisture contamination.

(3) Remove the Tedlar layer (moisture barrier) from the inner surface with No. 240 or finer Scotch-Brite abrasive. Do not sand into the fibers in the inner skin.

BOEING PROPRIETARY - Copyright © - Unpublished Work - See title page for details.

(4) On the inner surface, drill a 0.06 inch diameter hole into the approximate center of each cell that contains moisture. Do not let the drill bit cause damage to the outer skin.

CAUTION: DO NOT LET THE TEMPERATURE BECOME MORE THAN 160°F (71°C) AT THE RADOME SURFACE OR DISTORTION CAN OCCUR.

(5) Use a vacuum as specified in 51-40-9 on the 0.06 inch diameter holes to remove water.

(6) Refer to 51-40-9, par. 3.B. for moisture removal with heat blankets.

(7) When the area is dry, clean as specified in par. 5.C.

(8) Apply one ply of glass fabric and resin as specified in par. 6, or one prepreg ply as specified in par. 7. The ply must be 1.0 inch larger all around than the drilled area. Refer to Fig. 8.

(9) Apply pressure as specified in par. 11.

(10) Cure the glass fabric and resin as specified in Fig. 5.

(11) Refinish the repair area as specified in par. 12.

C. Moisture removal by the skin replacement procedure:

NOTE: The skin replacement procedure is better because it does not add one more ply over all of the repair area. One more ply adds thickness which decreases the transmission efficiency of the repair.

(1) Find the range of moisture contamination with X-Ray and/or a moisture detector (Model A8-AF, Data Tach Co.).

(2) Remove the inner surface skin plies to a circular or oval shape to open the honeycomb core in the area with water contamination.

(3) Use a vacuum or oil-free compressed air to remove water.

CAUTION: DO NOT LET THE TEMPERATURE BECOME MORE THAN 160°F (71°C) AT RADOME SURFACE OR DISTORTION CAN OCCUR.

(4) Refer to 51-40-9, par. 2.B., for moisture removal with heat blankets.

(5) Prepare and clean the repair area as specified in par. 5.B. and 5.C.

(6) Complete the repair as specified in par. 6 for a wet layup repair and par. 7 for a preimpregnated repair.

5. Remove Damage and Prepare Damaged Area

A. Damage removal

BOEING PROPRIETARY - Copyright © - Unpublished Work - See title page for details.

(1) When the damage occurs to the skins only, remove the damaged laminations to a circular or oval shape. Do not cause more damage to the plies, the core, or the adjacent material during damage removal.

NOTE: Remove only damaged plies.

(2) When the core is also damaged, remove the core to a circular or oval shape (refer to 51-40-9 for the core removal procedure). Do not cut into the skin on the opposite side which was not damaged.

(3) Areas with moisture contamination that can not be dried with heat as specified in par. 4.B.(5) must be removed with the other damage.

B. Prepare the damaged area (Fig. 2)

(1) Find the number of plies that were removed. Apply masking tape around the repair area:

(a) For wet layup repairs make the distance between the tape and the repair be equal to the sum of 1.0 inch for each repair ply plus 1.0 inch for a border around the repair.

(b) For prepreg repairs make this distance be equal to the sum of 0.5 inch for each repair ply plus 1.0 inch for a border around the repair.

NOTE: If damage is through the inner and outer skins, the repair patch of one skin must be larger than the repair patch of the other skin (Fig. 2).

CAUTION: DO NOT SAND INTO OR DAMAGE GLASS FILAMENTS IN THE SKIN WHICH IS NOT DAMAGED. STRUCTURAL STRENGTH OF THE SKIN WILL BE DECREASED.

(2) When damage occurs to the inner skin, remove the Tedlar layer (moisture barrier) from the inner surface of the repair area. Use No. 240 or finer Scotch-Brite abrasive.

CAUTION: DO NOT USE PAINT STRIPPERS FOR FINISH REMOVAL. DAMAGE TO THE ADHESIVE RESIN SYSTEM WILL OCCUR.

(3) Remove external finishes using No. 180 or smaller grit sandpaper:

(4) For protection, seal open core with masking tape, a metal plate, or an equivalent.

WARNING: SANDING CAUSES A FINE DUST THAT CAN IRRITATE SKIN. INJURY CAN OCCUR IF PERSONS BREATHE TOO MUCH OF THIS DUST. OBEY PRECAUTIONS FOR SKIN AND RESPIRATION PROTECTION.

USE EXPLOSIONPROOF EQUIPMENT WHERE VAPOR IGNITION IS POSSIBLE. AN EXPLOSION CAN CAUSE INJURY.

(5) Sand a constant taper around the repair with No. 180 sandpaper. Taper a distance of 1.0 inch for each ply of the laminate for a wet layup repair. Taper 0.5 inch for each ply of the laminate for a prepreg repair.

NOTE: Use a flexible disk sander, a belt sander, a rotating pad sander, or sand by hand.

BOEING PROPRIETARY - Copyright © - Unpublished Work - See title page for details.

(6) When damage occurs to skins only, remove core protection and lightly sand the core to remove resin fillets where possible. Do not decrease core thickness by more than 0.0075 inch.

CAUTION: HOLD THE UNDAMAGED SKIN ON THE OTHER SIDE DURING SANDING TO PREVENT DELAMINATION.

DO NOT SAND OR DAMAGE GLASS FILAMENTS IN THE SKIN WHICH IS NOT DAMAGED. STRUCTURAL STRENGTH OF THE SKIN WILL BE DECREASED.

(7) Where the core is damaged, but the opposite skin is not damaged, sand the inner side of the opposite skin to remove resin fillets. Use No. 180 or smaller grit sandpaper. Resin fillet removal will let the replacement core seat correctly.

C. Clean the repair area

WARNING: USE EXPLOSIONPROOF EQUIPMENT WHERE VAPOR IGNITION IS POSSIBLE. AN EXPLOSION CAN CAUSE INJURY.

(1) Remove all sanding dust with oil-free compressed air and a vacuum cleaner.

WARNING: IF SOLVENTS ARE USED, DO NOT BREATH VAPORS. USE MECHANICAL VENTILATION OR RESPIRATORY PROTECTION WHEN YOU WORK IN A CONFINED SPACE OR AREA. DO NOT LET SOLVENTS TOUCH SKIN, EYES OR CLOTHING. WEAR APPROVED GLOVES AND PROTECTIVE CLOTHING. WEAR EYE PROTECTION. KEEP AWAY FROM SOURCES OF HEAT, FIRE OR SPARKS.

TO BREATH VAPORS OR LET SOLVENT TOUCH SKIN OR EYES IS DANGEROUS. HEAT, FIRE OR SPARKS CAN CAUSE AN EXPLOSION.

(2) Clean surfaces with a clean cloth moist with MIBK (methyl isobutyl ketone), MEK (methyl ethyl ketone), or acetone. Let the solvent evaporate before doing the repair.

6. Wet Layup Repairs

CAUTION: DO NOT USE CHEMICAL PAINT STRIPPERS TO REMOVE PAINT TO EXAMINE FOR DAMAGE. DAMAGE TO THE ADHESIVE RESIN SYSTEM WILL OCCUR.

NOTE: Repairs made with this paragraph must put the radome back to its initial thickness (within 0.0045 inch) as shown in Fig. 1. Three-ply radomes must have an electrical test after repair as specified in ARTC 4 (Ref par. 1.D.) unless specified differently in Repair Limits (Fig. 3).

BOEING PROPRIETARY - Copyright © - Unpublished Work - See title page for details.

A. Repair of skin laminate

(1) Find the range of damage as specified in par. 3.

(2) Remove damaged plies and prepare area as specified in par. 5.

(3) Prepare repair plies as specified in par. 8.A.

(4) Apply repair plies as specified in par. 8.B.

(5) Apply pressure as specified in par. 11.

(6) Cure the repair as specified in Fig. 5.

(7) Refinish the repair as specified in par. 12.

B. Repair of damage to one skin and honeycomb core with replacement core.

(1) Find the range of damage as specified in par. 3.

(2) Remove damaged skin and core and prepare area as specified in par. 5.

(3) Make, clean and install honeycomb replacement core as specified in par. 10.

(4) Prepare and apply repair plies as specified in par. 8.

(5) Apply pressure as specified in par. 11.

(6) Cure the repair as specified in Fig. 5.

(7) Refinish the repair as specified in par. 12.

C. Repair of damage through internal and external skins with honeycomb core replacement.

(1) Find the range of damage as specified in par. 3.

(2) Remove the damaged skins and core as specified in par. 5.A.

(3) Make a plaster backup mold:

(a) To repair the external skin first, fill the hole with a wooden plug or equivalent to make an inner surface level with the honeycomb core.

NOTE: If it helps to repair the internal skin first, form the backup mold on the external skin surface and adapt the procedure. If necessary, make the backup mold from an equivalent area on a different radome.

(b) Put a parting film on the area on the internal skin.

(c) Make a dam around the area to give a mold thickness of at least 1.0 inch.

(d) Pour a water plaster mixture into the dam.

(e) When the plaster has hardened, remove it from the radome. Dry it in an air circulating oven at 120°F for approximately 24 hours.

(4) Remove the plug and the parting film from the internal skin.

(5) Taper sand and clean the external skin as specified in par. 5.B. and C.

(6) Put a clean parting film on the area on the internal skin and install the backup mold in position with clamps, props or lashing.

(7) Make, clean, and install the honeycomb replacement core as specified in par. 10.

(8) Prepare and apply repair plies to the external skin as specified in par. 8.

(9) Apply pressure as specified in par. 11.

(10) Cure as specified in Fig. 5.

(11) Remove the backup mold and parting film from the internal skin.

(12) Taper sand and clean the internal skin as specified in par. 5.B. and C.

(13) Complete the repair as specified in par. 6.A.(3) thru 6.A.(7).

7. Repairs With Preimpregnated (Prepreg) Material

CAUTION: DO NOT USE CHEMICAL PAINT STRIPPERS TO REMOVE PAINT TO EXAMINE FOR DAMAGE. DAMAGE TO THE ADHESIVE RESIN SYSTEM WILL OCCUR.

NOTE: Repairs made with this paragraph must put the radome back to its initial thickness (within 0.0045 inch) as shown in Fig. 1. Three-ply radomes must have an electrical test after repair as specified in ARTC 4 (Ref par. 1.D.) unless specified differently in Repair Limits (Fig. 3).

A. Repair of skin laminate.

(1) Find the range of damage as specified in par. 3.

BOEING PROPRIETARY - Copyright © - Unpublished Work - See title page for details.

(2) Remove damaged plies and prepare as specified in par. 5.

(3) Prepare the repair plies as specified in par. 9.A.

(4) Apply the repair plies as specified in par. 9.B.

NOTE: Where a repair is made to the laminate over an open honeycomb core, put a piece of adhesive film on the core as specified in par. 10.C.(2).

(5) Apply pressure as specified in par. 11.

(6) Cure the repair as specified in Fig. 5.

(7) Refinish the repair as specified in par. 12.

B. Repair of damage to one skin and honeycomb core with replacement core.

(1) Find the range of damage as specified in par. 3.

(2) Remove damaged skin and core and prepare area as specified in par. 5.

(3) Make, clean, and install honeycomb replacement core as specified in par. 10.

(4) Prepare and apply repair plies as specified in par. 9.

(5) Apply pressure as specified in par. 11.

(6) Cure the repair as specified in Fig. 5.

(7) Refinish the repair as specified in par. 12.

C. Repair of damage through internal and external skins with honeycomb core replacement.

(1) Find the range of damage as specified in par. 3.

(2) Remove the damaged skins and core as specified in par. 5.

(3) Make a plaster backup mold as specified in par. 6.C.(3).

(4) Remove the parting film and masking tape from the internal skin.

(5) Taper sand and clean the external skin as specified in par. 5.B. and C.

(6) Apply the backup mold as specified in par. 6.C.(6).

(7) Make, clean, and install the honeycomb replacement core as specified in par. 10.

(8) Prepare and apply repair plies to the external skin as specified in par. 9.

(9) Apply pressure as specified in par. 11.

(10) Cure as specified in Fig. 5.

(11) Remove the backup mold and parting film from internal skin.

(12) Taper sand and clean the internal skin as specified in par. 5.B. and C.

(13) Complete the repair as specified in par. 7.A.(3) thru 7.A.(7).

8. Prepare and Apply Glass Fabric Repair Plies (Wet Layup)

A. Prepare the overlay patch.

(1) Get a piece of glass fabric sufficiently large to cut all of the plies necessary for the patch. Plies which are not circular must have the correct warp direction (par. 8.A.(6) below). Use BMS 9-3 Type H, H-1, H-2, H-3, Class 10, 11, 13 or 19 fiberglass cloth.

(2) Cut two pieces of parting film approximately 3.0 inches larger all around than the glass fabric. Use tape to hold one piece on a smooth surface which is larger all around than the parting film.

NOTE: Use PVA film or other parting films.

(3) Spread Resin Mix 1, 2, or 3 prepared as specified in Fig. 4, on parting film and put the glass fabric over the resin.

NOTE: Use an amount of resin approximately equal in weight to the weight of the dry glass fabric.

(4) Cover the glass fabric on the parting film with the second piece of parting film.

(5) Use a squeegee or roller over the parting film to push the resin through the cloth. This will impregnate the cloth and remove air bubbles.

(6) Cut the repair plies from the impregnated cloth. The parting film on the two sides of the cloth decreases fraying of the edges as the cloth is cut.

(a) The warp direction of each repair ply must be in the same direction as the warp of the damaged ply the repair ply replaces.

(b) Cut the first (smallest) ply so it has an overlap with the taper sanded area of 1.5 inches. Cut each of the subsequent plies so it is 1.0 inch larger all around than the ply immediately below (Fig. 2).

(7) Too much resin in the core cells can change the electrical properties of the radome. To prevent this condition, decrease the quantity of resin in the patch over the opened core. On a smooth surface before layup, sweep the area in the center of each ply. Sweep only the area that will be directly over the core that was opened for repair. Remove approximately one-third of the resin from this area.

B. Apply overlay plies (Fig. 2).

NOTE: If damage occurs at a lap joint do not make an equivalent lap in the repair plies.

(1) Remove the parting film from one side of the smallest ply of the patch and put that side against the repair area. Make sure the warp direction of each repair ply is in the same direction as the warp of the damaged ply the repair ply replaces.

(2) Use a squeegee over the parting film that is on the overlay ply to remove wrinkles and air bubbles. Do not apply too much pressure. Too much pressure will remove more resin than necessary.

(3) Remove the remaining parting film.

(4) Remove the parting film from one side of the subsequent ply. This ply must be 1.0 inch larger all around than the one before it.

(5) Apply subsequent plies as specified in steps (2) thru (4) above.

(6) After the last ply, put a piece of parting film on the entire repair. The parting film must be 0.5 inch larger all around than the patch.

(7) Sweep unwanted resin to the edges of the parting film to make the edges of the patch smooth with the contour of the surface around the repair. Make all loose threads smooth also.

(8) Remove resin that was swept to the edges of the parting film.

BOEING PROPRIETARY - Copyright © - Unpublished Work - See title page for details.

9. Prepare and Apply Preimpregnated (Prepreg) Glass Fabric Repair Plies

A. Prepare the repair plies.

CAUTION: THE PREIMPREGNATED MATERIAL MUST STAY FREE OF CONTAMINATION DURING PREPARATION. WEAR CLEAN WHITE GLOVES WHEN THE MATERIAL IS TOUCHED.

(1) Cut the repair plies from the prepreg material.

(a) Use BMS 8-79 fiberglass prepreg Style 1581, Class III. Type 7781 can be used as a replacement.

(b) The warp direction of each repair ply must be in the same direction as the warp of the damaged ply the repair ply replaces.

(c) Cut the first (smallest) ply so it has an overlap with the taper sanded area of 1.0. Cut each of the subsequent plies 0.5 inch larger all around than the ply immediately below it. Refer to Fig. 2.

B. Apply the repair plies.

NOTE: If damage occurs at a lap joint, do not make an equivalent lap in the repair plies.

(1) Apply the smallest ply first. Each subsequent ply must be 0.5 inch larger all around than the one before it.

NOTE: Remove the parting film after applying each ply.

10. Make, Clean and Install the Honeycomb Replacement Core Plug

A. Make the core plug.

(1) Cut a piece of honeycomb core material to fit the repair hole.

(a) Refer to Fig. 1 for an equivalent material.

(b) The repair core must be 0.015 inch thinner than the core that was not damaged.

(c) The repair core must not be smaller all around than the repair hole by more than 0.06 inch.

BOEING PROPRIETARY - Copyright © - Unpublished Work - See title page for details.

B. Clean the core plug.

WARNING: IF SOLVENTS ARE USED, DO NOT BREATH THE VAPORS. USE MECHANICAL VENTILATION OR RESPIRATORY PROTECTION WHEN YOU WORK IN A CONFINED SPACE OR AREA. DO NOT LET SOLVENTS TOUCH THE SKIN, EYES OR CLOTHING. WEAR APPROVED GLOVES AND PROTECTIVE CLOTHING. WEAR EYE PROTECTION. KEEP AWAY FROM SOURCES OF HEAT, FIRE OR SPARKS.

TO BREATH VAPORS OR LET SOLVENT TOUCH SKIN OR EYES IS DANGEROUS. HEAT, FIRE OR SPARKS CAN CAUSE AN EXPLOSION.

CAUTION: DO NOT USE CHLORINATED SOLVENTS. DAMAGE TO CORE MATERIAL WILL OCCUR.

(1) To clean large areas, put the core in an MIBK, MEK or acetone bath for 60 seconds, or vapor degrease core as specified in 20-30-3 of the Standard Overhaul Practices, Document D6-51702.

(2) Clean small areas of contamination with MIBK, MEK, or acetone.

(3) The core must be fully dry before installation.

C. Install core plug.

WARNING: THESE CHEMICALS CONTAIN TOXIC INGREDIENTS. USE MECHANICAL VENTILATION OR RESPIRATORY PROTECTION. USE PROTECTION FOR SKIN AND EYES TO PREVENT CONTAMINATION WITH UNCURED RESINS. WEAR COTTON LINED RUBBER GLOVES FOR HAND PROTECTION. IF SKIN TOUCHES UNCURED RESINS, WASH WITH SOAP AND WARM WATER. DO NOT USE SOLVENTS TO CLEAN SKIN. KEEP AWAY FROM SOURCES OF HEAT, FIRE, OR SPARKS.

TO BREATH VAPORS OR LET CHEMICALS TOUCH THE SKIN OR EYES IS DANGEROUS. HEAT, FIRE, OR SPARKS CAN CAUSE AN EXPLOSION.

CAUTION: WEAR CLEAN WHITE GLOVES WHEN ADHESIVE FILM IS TOUCHED TO PREVENT CONTAMINATION.

DO NOT FOLD, STRETCH OR MAKE THE ADHESIVE FILM THINNER.

THE REPAIR MUST BE COMPLETED AND CURED IN LESS THAN 48 HOURS AFTER THE ADHESIVE IS REMOVED FROM REFRIGERATED STORAGE. QUALITY OF THE ADHESIVE IS DECREASED AFTER THIS TIME LIMIT.

NOTE: Do not open adhesive film until adhesive is near room temperature. Near room temperature, wrapper is free of moisture condensation.

During use, hold the roll of adhesive horizontally through its axis away from other rolls or objects.

(1) For wet layup repairs, apply potting compound:

(a) Apply Resin Mix 1, 2, or 3 prepared as specified in Fig. 4 to the bottom of the repair core.

(b) Apply Resin Mix 5 to the sides of the repair core and to the core which is the sides of the repair hole.

(2) For prepreg repairs apply adhesive film:

(a) Cut a piece of BMS 5-51 or BMS 5-80, Type 2, Class I or II, Grade 10 or 15 adhesive film to the dimensions of the repair hole. Put the adhesive in the repair hole on the inner surface of the far skin.

(b) Cut a piece of adhesive to a width equal to the thickness of the repair core and as long as the distance around the core. Wind the adhesive around the repair core. Use one layer of BMS 5-51 or BMS 5-80 Type 2, Class I or II, Grade 30 or two layers of Grade 15.

(3) Install the core plug with the core ribbon in the same direction as the core that was not damaged.

(4) For wet layup repairs, apply potting compound to the top of the open core. Use Resin Mix 1, 2, or 3 prepared as specified in Fig. 4.

(5) For prepreg repairs, apply a piece of adhesive film to the top of the open core. Cut the piece of adhesive as large as the repair core. Use BMS 5-51 or BMS 5-80, Type 2, Class I or II, Grade 10 or 15.

11. Application of Pressure (Fig. 6)

A. Put a layer of perforated FEP parting film (1 mil thick) on the repair. Cut the FEP so it is 3.0 inches larger all around than the repair patch.

B. Attach three thermocouples with equal separation around the edge of the repair and connect them to the recorders.

C. Put a layer of dry peel ply or Style 120 glass fabric (or equivalent thickness glass fabric) on the perforated FEP as a surface bleeder. Cut the surface bleeder so it is 2.0 inches larger all around than the edge of the perforated FEP.

D. Put a layer of solid FEP parting film (2 mil thick) on the surface bleeder. Cut the solid FEP to the same dimensions as the perforated FEP.

E. Put a layer of Airweave SS or Style 120 glass fabric on the solid FEP as a surface breather. Cut the surface breather to the same dimensions as the surface bleeder. Make sure the surface breather touches the surface bleeder along the edges.

F. Attach a vacuum line to the edge of the surface breather.

WARNING: FOR ACCELERATED CURE, USE HEAT CURING EQUIPMENT THAT LOCAL FIRE PROTECTION AUTHORITIES FIND SATISFACTORY. FAILURE TO OBEY CAN CAUSE INJURY TO PERSONS.

G. If a heat lamp is used as a heat source, refer to Fig. 7 and continue to par. H. If a heat blanket is used as a heat source, include these steps:

NOTE: If the structure is too small for the heat blanket to be vacuum bagged, continue to step (8) and put the heat blanket on the vacuum bag.

(1) Put a heat blanket on the surface breather. The heat blanket must be at least 2.0 inches larger all around than the repair patch.

NOTE: To keep areas of unusually high temperature to a minimum, include this optional step: If the heat blanket is larger than 12.0 inches in any dimension, put an aluminum caul plate (0.016 inch thick) under the heat blanket. Make the caul plate approximately the same dimension as the surface breather but smaller.

(2) Put the controlling thermocouple on the center of the heat blanket.

(3) Put 4 to 6 layers of glass fabric on the heat blanket. The glass fabric will insulate the heat blanket and prevent damage to the bagging film.

H. Apply extruded sealing compound all around the repair area, 2 to 6 inches from the edge of the heat blanket.

I. Put a piece of vacuum bag material on the repair area. Seal the edge with the extruded sealing compound. Fold the vacuum bag where necessary to prevent bridging of bag material and a subsequent bag tear. Put a pad on all sharp objects and corners to prevent a bag tear. It is optional to vacuum bag all of the part.

NOTE: If the repair area is larger than 16.0 inches in diameter, vacuum bag all of the part and hold it in place to prevent delamination and distortion. Use restraining devices to keep the contour and hold up the part if sagging and distortion can occur because of the weight of the part.

J. Evacuate the air from under the vacuum bag and keep a vacuum of 22 inches of mercury minimum.

NOTE: Keep a vacuum of 22 inches of mercury until the repair is fully cured.

K. Examine the vacuum bag for leaks.

L. If the replacement core plug will be cured at the same time as the repair plies, put thermocouples on the far side skin, or caul plate opposite the repair area. Put a heat blanket (if one is used to speed the cure) and vacuum line on the far side skin and repeat steps (7)(b) thru (11) above.

12. Refinish After Repair

CAUTION: DO NOT SAND INTO GLASS FIBERS. FAILURE TO OBEY WILL DECREASE THE STRENGTH OF THE COMPONENT.

A. Make the edges of the repair area smooth, and sand lightly to remove resin ridges with No. 180 or smaller grit sandpaper.

B. Clean area as specified in par. 5.C. and look for defects.

NOTE: Repair area must have no pits, blisters, or areas with too much or too little resin.

C. Seal any exposed fibers with a thin layer of Resin Mix 2, 3, or 6 prepared and cured as specified in Fig. 4 and 5.

D. In areas where the Tedlar (moisture barrier) on the inner surface of the radome is removed, apply a thin layer of Resin Mix 6, prepared as specified in Fig. 4. Remove unwanted resin before it gels. Cure as specified in Fig. 5.

E. Refinish the exterior surface of the radome as specified in 53-52-00 of the 737 Maintenance Manual. See Fig. 9 for antistatic finish requirements.

F. If the aluminum foil pressure sensitive tape or the glide slope antenna director slip is removed, install it again inside the radome as specified in 34-31 of the 737 Maintenance Manual.

13. Repair of Damage Caused by Electrical Discharge

CAUTION: DO NOT USE CHEMICAL PAINT STRIPPERS TO REMOVE PAINT TO EXAMINE FOR DAMAGE. DAMAGE TO THE ADHESIVE RESIN SYSTEM WILL OCCUR.

A. Fully clean inner and outer surfaces. Radome surfaces must have no moisture or dirt. Clean as specified in 51-21-00 of the 737 Maintenance Manual. See par. 4 for moisture removal instructions if necessary.

B. Find the defects in the inner skin. Directly opposite the defect in the outer skin, remove the exterior finish, as specified in par. 5.B.(3), from an area not less than 4.0 inches diameter.

C. A leak test with positive air pressure can help to find outer skin defects which are not easily seen.

(1) Apply a thin layer of uncatalyzed resin to the area on the outer skin.

(2) Use a flexible funnel larger all around than the inner skin defect and apply a positive air pressure not more than 3 psi to this area.

(3) Bubbles in the resin will show the outer skin defect.

NOTE: The maximum size that can be repaired of one defect caused by electrical discharge is 1 square inch. This includes punctures in the inner and outer skins and the delaminated area. Minimum spacing permitted between adjacent repairs is 3.0 inches, edge to edge. For damage more than these limits see par. 6.C. (wet layup) or 7.C. (prepreg).

D. Drill a 0.06 inch dia hole in the center of the defect. Insert a hypodermic needle through the skin and fill the core cell with Resin Mix 1, 2, or 3, prepared as specified in Fig. 4.

E. Inject Resin Mix 1, 2, or 3 between the delaminated plies of the skin with a hypodermic needle.

F. Apply a thin layer of Resin Mix 1, 2, or 3 to the defects. Put a cover of PVA or other parting film on the repair.

G. When the resin becomes a gel, remove the parting film.

H. Refinish the repair as specified in par. 12.

14. Small Repairs

CAUTION: DO NOT USE CHEMICAL PAINT STRIPPERS TO REMOVE PAINT TO EXAMINE FOR DAMAGE. DAMAGE TO THE ADHESIVE RESIN SYSTEM WILL OCCUR.

NOTE: The small repairs in this paragraph will not require electrical testing if the thickness limits shown in Fig. 1 are obeyed. Refer to par. 4 for moisture removal instructions.

A. Scratches in the resin which do not damage the glass fibers.

(1) Remove scratches with No. 180 or smaller grit sandpaper.

(2) Clean the area as specified in par. 5.C.

(3) Apply a layer of Resin Mix 1, 2, 3, or 6, prepared as specified in Fig. 4.

(4) Sweep the area to make the resin smooth and remove any air bubbles.

(5) Cure the repair as specified in Fig. 5.

(6) Refinish the repair as specified in par. 12.

B. Scratches which go through one ply.

NOTE: Use this repair only where the damage is not more than 2.0 long and 0.125 inch wide in one ply only. Ply replacement is necessary for larger damage.

(1) Remove the scratch with No. 180 or smaller grit sandpaper.

(2) Clean the area as specified in par. 5.C.

(3) Fill the scratch with Resin Mix 4 prepared as specified in Fig. 4.

(4) Cure as specified in Fig. 5.

(5) Apply a layer of Resin Mix 1, 2, 3, or 6 prepared as specified in Fig. 4.

(6) Cure the repair as specified in Fig. 5.

(7) Refinish the repair as specified in par. 12.

C. Punctures less than 0.25 inch diameter.

(1) Remove the damaged material from the area around the puncture.

(2) Clean the area as specified in par. 5.C.

(3) Push Resin Mix 4, prepared as specified in Fig. 4, into the puncture.

(4) Cure as specified in Fig. 5 or use manufacturer's instructions.

(5) Sand to make the cured resin smooth with the undamaged surface around the repair.

(6) Refinish the repair as specified in par. 12.

D. Delamination of plies

NOTE: This repair applies where delamination is less than 1% of any 6.0 inch by 6.0 inch area, and where skin distortion is small. Delamination which can not be satisfactorily repaired by this procedure because of skin distortion or because it is larger than permitted should be repaired as specified in par. 6.A. or 7.A.

(1) Find the range of delamination as specified in par. 3.C.

(2) Add Resin Mix 1, 2, or 3 prepared as specified in Fig. 4, between the delaminated plies. Use a hypodermic needle as specified in par. 13.D. and E.

(3) Apply pressure as specified in par. 11.

(4) Cure the repair as specified in Fig. 5.

(5) Refinish the repair as specified in par. 12.

15. Nose Radome Fastener Hole Repairs

A. Remove the 737 nose radome from the airplane. Refer to AMM 53-52-0 for the correct removal instructions of the nose radome.

B. Remove the finish in the damaged area. Refer to AMM 51-21-0.

C. Clean the repair area. Refer to par. 5.C.

D. Find the limits of the damage in the repair area. Refer to par. 3.

If you want to repair the damaged fastener hole with a wet lay-up procedure or the preimpregnated fabric lay-up procedure, then refer to SRM 51-40-9 or SRM 51-40-19 to repair the area.

NOTE: Use the initial fastener hole location on the nose radome to drill the new fastener hole. This will help you drill the new fastener hole in its correct location and it will complete the repair.

If you want to repair the damaged fastener with a repair insert, then go to par. 15.E. to complete the repair.

If you want to replace the damaged fastener insert with a repair insert, then go to par. 15.F. to complete the repair.

NOTE: If the area around the fastener is damaged, then refer to SRM 51-40-9 or SRM 51-40-19 to repair honeycomb panel edgebands.

E. Repair of Damaged Fastener Holes with Repair Inserts. See Fig. 10, Detail I.

(1) Enlarge the initial fastener holes in the repair area. See Fig. 10, Detail I.

(2) Get the part 1 (repair insert) for this repair procedure. Refer to Fig. 10, Table I.

(a) New inserts that have all of the finished dimensions can be purchased from The Boeing Company Spares Department.

(b) As an alternative, you can machine the repair insert. See Fig. 10, Detail II for the necessary dimensions to machine the insert.

- Make the part 1 (repair insert) from 15-5PH Solution Treated Corrosion Resistant Stainless Steel (CRES).

NOTE: Heat treat the CRES to 150-170 ksi. If necessary, you can refer to MIL-H-6875 or an equivalent standard for heat treat requirements.

(4) Remove the nicks, scratches, gouges, burrs, and sharp edges from the repair area and the repair inserts.

BOEING PROPRIETARY - Copyright © - Unpublished Work - See title page for details.

(5) Install the repair inserts into the enlarged holes with BMS 5-92, Type I or Type III adhesive material between the mating surfaces. See Fig. 10, Detail III.

NOTE: To mix the BMS 5-92 resin systems, refer to Fig. 10, Table II.

To cure the BMS 5-92 resin, see Fig. 10, Detail IV.

(6) Refinish the repair area. Refer to par. 12.

(7) Apply a bead of BMS 5-95 sealant around the repair insert. Refer to SRM 51-20-4

F. Repair of Damaged Fastener Inserts with New Repair Inserts. See Fig. 10, Detail I.

(1) Remove the damaged fastener insert from the nose radome.

(2) Get a new part 1 (repair insert) for this repair procedure. Refer to Fig. 10, Table I.

(a) New inserts that have all of the finished dimensions can be purchased from The Boeing Company Spares Department.

(b) As an alternative, you can machine the repair insert. See Fig. 10, Detail II for the necessary dimensions to machine the insert.

- Make the part 1 (repair insert) from 15-5PH Solution Treated Corrosion Resistant Stainless Steel (CRES).

NOTE: The Boeing Company recommends that you use 15-5PH CRES Solution Treated Corrosion Resistant Stainless Steel (CRES).

Heat treat the CRES to 150-170 ksi. If necessary you can refer to MIL-H-6875 an equivalent standard for heat treat requirements.

(3) Remove the nicks, scratches, gouges, burrs, and sharp edges from the repair area and the repair inserts.

(4) Install the repair inserts into the initial insert hole(s) with BMS 5-92, Type I or Type III adhesive material between the mating surfaces. See Fig 10, Detail III.

NOTE: To mix the BMS 5-92 resin systems, refer to Fig. 10, Table II.

To cure the BMS 5-92 resin, see Fig. 10, Detail IV.

(5) Refinish the repair area. Refer to par. 12.

(6) Apply a bead of BMS 5-95 sealant around the repair insert. Refer to SRM 51-20-4.

BOEING PROPRIETARY - Copyright © - Unpublished Work - See title page for details.

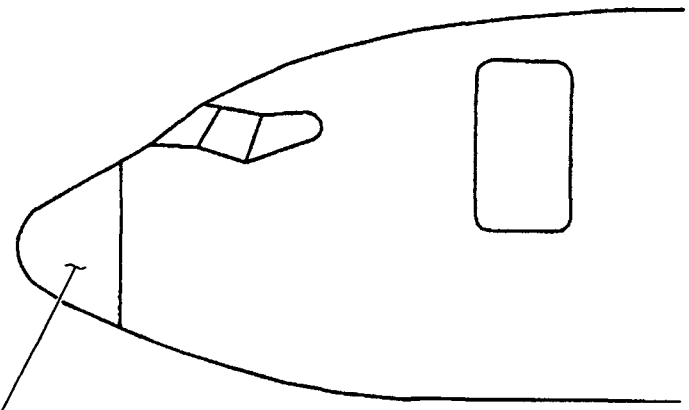

FOR X-BAND RADOMES, SEE DETAILS I AND II
FOR C-BAND RADOMES WITH HONEYCOMB CORE, SEE DETAIL III
FOR C-BAND RADOMES WITH FLUTED CORE, SEE DETAIL IV

Core Material and Thickness for the X-Band Radomes
Figure 1 (Sheet 1)

BOEING PROPRIETARY - Copyright © - Unpublished Work - See title page for details.

REPAIR INSTRUCTIONS

- X-BAND RADOME IS CONSTRUCTED FROM HONEYCOMB CORE SANDWICH WITH LAMINATED PREIMPREGNATED PILES OF GLASS FIBER
- RADOME THICKNESS AFTER REPAIR MAY BE MEASURED AS DESCRIBED IN THE NONDESTRUCTIVE TESTING MANUAL, D6-37239, PART 6, 53-50-00, FIGURE 1
- FOR TEST SPECIFICATIONS, SEE DWG 65-73294
- THICKNESS IS BASED ON CURED SANDWICH THICKNESS BEFORE THE APPLICATION OF FINISHES OR RAIN EROSION COATINGS

[A] REPAIR CORE MUST BE 0.015 INCH THINNER THAN THE ORIGINAL CORE THICKNESS. SEE FIG. 4 FOR THE REPAIR MATERIAL

[B] FOR AIRPLANES NOT LISTED IN [C]. SEE VENDOR DATA ON INNER SURFACE OF RADOME FOR APPLICABLE PART NUMBERS

[C] FOR AIRPLANES WITH HEATH-TECNA RADOMES INSTALLED. SEE VENDOR DATA ON INNER SURFACE OF RADOME FOR APPLICABLE PART NUMBER (65-73294-7)

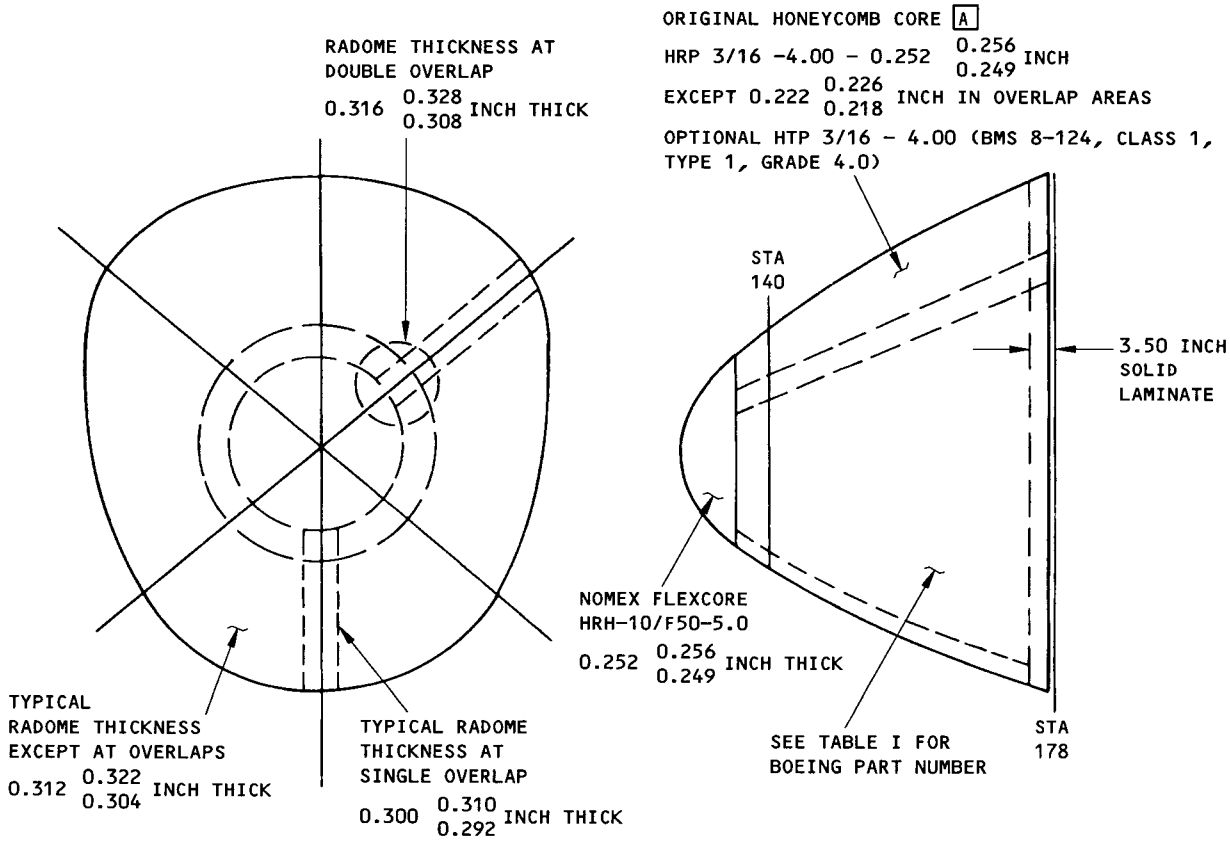

DETAIL I
X-BAND NOSE RADOMES

Core Material and Thickness for Nose Radomes
Figure 1 (Sheet 2)

BOEING PROPRIETARY - Copyright © - Unpublished Work - See title page for details.

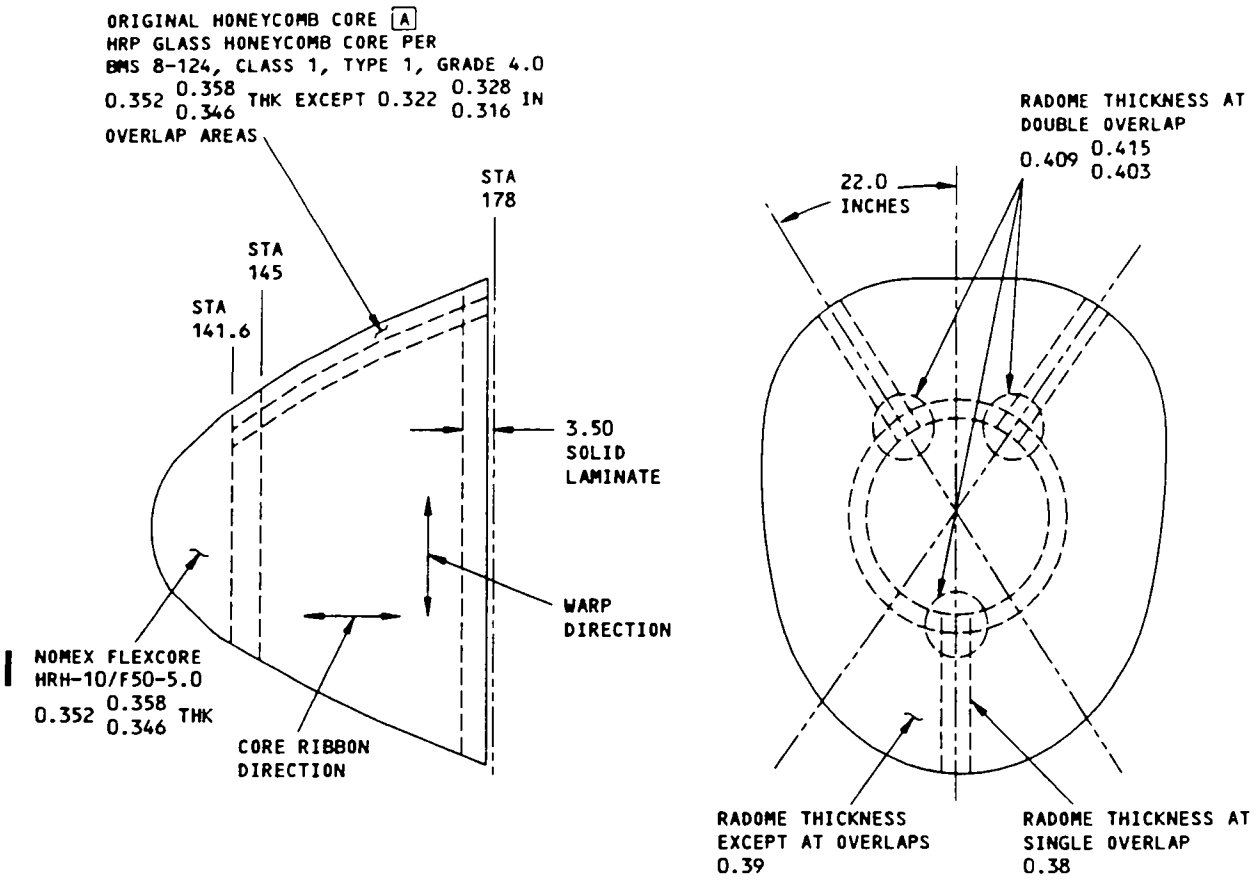

DETAIL II C
X-BAND NOSE RADOMES

Core Material and Thickness for Nose Radomes
Figure 1 (Sheet 3)

BOEING REF DWG	
CUM LINE NO	DASH NO. OF DWG 65-54465 INDICATING PART NO.
1	-1
2	-1
3	-1
4	-1
5	-1
7	-1
9	-1
10	-1
11	-1
13	-10
15	-1
17	-10
20	-10
23	-10
26	-10
29	-10
32	-10
33	-10
35	-10
38	-10
39	-10
40	-10
41	-10
43	-10
44	-10
45	-10
46	-10
47	-10
51	-10
52	-10
53	-10
54	-10
56	-10
57	-10
60	-10
61	-10
64	-10
66	-10
67	-10
70	-10
72	-10
73	-10
77	-10
79	-10
80	-10
81	-10

BOEING REF DWG	
CUM LINE NO	DASH NO. OF DWG 65-54465 INDICATING PART NO.
82	-10
83	-10
84	-10
87	-10
88	-10
89	-10
91	-10
92	-10
93	-10
94	-10
96	-10
98	-10
101	-10
102	-10
104	-10
106	-10
108	-10
109	-10
110	-10
112	-10
113	-10
118	-15
119	-15
120	-15
124	-25
125	-15
126	-15
127	-15
128	-15
131	-25
132	-15
134	-15
136	-25
139	-15
140	-15
141	-15
142	-25
143	-15
144	-15
145	-15
146	-17
147	-15
149	-15
152	-15
154	-15
155	-15

BOEING REF DWG	
CUM LINE NO	DASH NO. OF DWG 65-54465 INDICATING PART NO.
156	-15
157	-15
158	-15
159	-15
160	-15
161	-15
162	-15
163	-15
164	-32
165	-15
166	-15
167	-15
168	-15
169	-15
170	-25
172	-15
173	-15
176	-15
177	-15
178	-15
182	-15
184	-15
188	-15
190	-15
194	-15
196	-15
199	-17
203	-15
204	-15
205	-15
207	-15
209	-25
212	-15
213	-15
214	-15
216	-25
217	-15
218	-25
219	-25
220	-25
221	-25
222	-25
223	-15
224	-15
225	-15
226	-25

TABLE I

Core Material and Thickness for Nose Radomes
Figure 1(Sheet 4)

BOEING REF DWG	
CUM LINE NO	DASH NO. OF DWG 65-54465 INDICATING PART NO.
228	-15
229	-25
230	-15
231	-15
232	-15
233	-25
234	-15
235	-15
236	-15
237	-15
238	-15
239	-15
241	-15
242	-15
243	-15
244	-15
245	-15
246	-15
247	-15
248	-15
249	-15
250	-15
251	-15
253	-15
254	-15
255	-15
256	-15
257	-15
258	-25
259	-15
260	-15
261	-15
262	-15
263	-15
265	-15
266	-15
268	-15
269	-28
270	-28
271	-28
272	-28
273	-28
274	-28
275	-28
276	-28
277	-28

BOEING REF DWG	
CUM LINE NO	DASH NO. OF DWG 65-54465 INDICATING PART NO.
278	-28
279	-28
280	-37
281	-28
282	-37
285	-28
287	-37
288	-28
289	-28
291	-28
292	-37
293	-37
294	-28
295	-28
296	-37
297	-28
298	-28
299	-28
300	-28
301	-28
302	-28
303	-28
305	-28
306	-28
307	-28
308	-28
310	-28
312	-28
313	-28
314	-28
315	-28
316	-28
318	-28
319	-28
320	-28
323	-28
324	-28
325	-28
327	-28
328	-28
331	-42
333	-28

BOEING REF DWG	
CUM LINE NO	DASH NO. OF DWG 65-54465 INDICATING PART NO.
335	-28
338	-28
341	-28
342	-28
344	-28
346	-28
348	-28
351	-28
352	-28
353	-28
354	-28
356	-28
358	-28
360	-28
364	-28
365	-28
366	-28
367	-28
368	-28
369	-28
370	-28
371	-28
372	-28
373	-28
374	-28
375	-28
376	-28
377	-28
378	-28
379	-42
380	-28

TABLE I

Core Material and Thickness for Nose Radomes
Figure 1 (Sheet 5)

BOEING REF DWG	
CUM LINE NO	DASH NO. OF DWG 65-54465 INDICATING PART NO.
381	-42
382	-28
383	-28
384	-28
385	-28
386	-28
387	-42
388	-28
389	-28
390	-28
391	-28
392	-28
393	-28
394	-28
395	-28
396	-28
397	-28
398	-28
399	-28
400	-28
401	-28
402	-28
403	-28
404	-28
405	-28
406	-28
407	-35
408	-28
409	-35
410	-28
411	-28
412	-28
413	-28
414	-28
415	-28
416	-42
417	-28
418	-28
419	-28
420	-28
421	-28
422	-28
423	-28
424	-28
425	-28
426	-28
427	-28
428	-28

BOEING REF DWG	
CUM LINE NO	DASH NO. OF DWG 65-54465 INDICATING PART NO.
429	-28
430	-28
431	-28
432	-28
433	-28
434	-28
435	-28
436	-28
437	-28
438	-28
439	-28
440	-28
441	-28
442	-28
443	-28
444	-28
445	-28
446	-28
447	-28
448	-28
449	-28
450	-28
451	-28
452	-28
453	-28
454	-28
455	-28
456	-28
457	-28
458	-28
459	-28
460	-28
461	-28
462	-28
463	-28
464	-28
465	-28
466	-28
467	-28
468	-28
469	-28
470	-28
471	-28
472	-28
473	-28
474	-28
475	-28

BOEING REF DWG	
CUM LINE NO	DASH NO. OF DWG 65-54465 INDICATING PART NO.
476	-28
477	-28
478	-28
479	-28
480	-28
481	-28
482	-28
483	-28
484	-28
485	-28
486	-28
487	-28
488	-28
489	-28
490	-28
491	-28
492	-28
493	-28
494	-28
495	-28
496	-28
497	-28
498	-28
499	-28
500	-28
501	-28
502	-28
503	-28
504	-28
505	-28
506	-28
507	-28
508	-28
509	-28
510	-28
511	-28
512	-28
513	-28
514	-28
515	-28
516	-28
517	-28
518	-43
519	-28
520	-28
521	-43

TABLE I

Core Material and Thickness for Nose Radomes
Figure 1(Sheet 6)

BOEING REF DWG	
CUM LINE NO.	DASH NO. OF DWG 65–54465 INDICATING PART NO.
522	–28
523	–43
524	–28
525	–43
526	–28
527	–43
528	–28
529	–28
530	–28
531	–28
532	–28
533	–28
534	–28
535	–28
536	–43
537	–43
538	–28
539	–28
540	–43
541	–28
542	–28
543	–28
544	–28
545	–28
546	–28
547	–28
548	–28
549	–28
550	–28
551	–28
552	–28
553	–43
554	–28
555	–43
556	–28
557	–28

BOEING REF DWG	
CUM LINE NO.	DASH NO. OF DWG 65–54465 INDICATING PART NO.
558	–43
559	–28
560	–28
561	–28
562	–28
563	–28
564	–28
565	–28
566	–28
567	–28
568	–28
569	–43
570	–28
571	–28
572	–28
573	–28
574	–43
575	–43
576	–28
577	–28
578	–28
579	–28
580	–28
581	–28
582	–28
583	–28
584	–28
585	–28
586	–28
587	–28
588	–28
589	–28
590	–28
591	–28
592	–28
593	–28

BOEING REF DWG	
CUM LINE NO.	DASH NO. OF DWG 65–54465 INDICATING PART NO.
594	–28
595	-28
596	-43
597	-28
598	-28
599	-28
600	-28
601	-43
602 THRU 712	–28
713	–49
714 THRU 717	–28

TABLE I

Core Material and Thickness for Nose Radomes
Figure 1 (Sheet 7)

BOEING REF DWG	
CUM LINE NO.	DASH NO. OF DWG 65-54465 INDICATING PART NO.
718	-49
719 THRU 722	-28
723	-49
724 THRU 739	-28
740	-49
741 THRU 756	-28
757	-49
758 THRU 845	-28
846	-52
847 THRU 870	-28
871	-49
872 THRU 874	-28
875	-49
876 THRU 908	-28
909	-49
910 THRU 922	-28
923	-49
924 THRU 927	-28
928	-52
929 THRU 956	-28
957	-49
958 THRU 964	-28
965	-49
966 THRU 983	-28

BOEING REF DWG	
CUM LINE NO.	DASH NO. OF DWG 65-54465 INDICATING PART NO.
984 THRU 989	-60
990	-28
991	-62
992	-60
993 THRU 996	-62
997 THRU 1000	-60
1002	-60
1003 THRU 1006	-62
1008 THRU 1013	-62
1014	-60
1016	-60
1017	-60
1018	-62
1019	-62
1020	-60
1021	-62
1023	-62
1024	-66
1025	-60
1026 THRU 1029	-66
1030	-62
1031	-66
1032 THRU 1034	-64
1035	-66
1036	-64
1038	-66
1039	-64
1041	-66

BOEING REF DWG	
CUM LINE NO.	DASH NO. OF DWG 65-54465 INDICATING PART NO.
1042	-64
1044	-64
1045	-66
1046	-64
1047	-64
1049	-64
1050	-64
1051	-66
1053 THRU 1056	-64
1058 THRU 1061	-64
1062	-66
1064 THRU 1067	-64
1068	-66
1070 THRU 1072	-64
1074	-64
1075	-64
1077 THRU 1082	-64
1084 THRU 1086	-64
1088	-64
1089	-64
1091	-64
1093	-64
1095	-64
1097	-64
1099	-64
1102	-64
1105	-64
1109	-64
1113	-64

TABLE I

Core Material and Thickness for Nose Radomes
Figure 1(Sheet 8)

BOEING REF DWG	
CUM LINE NO.	DASH NO. OF DWG 65-54465 INDICATING PART NO.
1117	-64
1120	-64
1135	-64
1143	-64
1151	-64
1154	-64
1155	-64
1165	-64
1167	-64
1176	-64
1178	-64
1186	-56
1189	-56
1194	-56
1197	-56
1199	-56
1203	-56
1223	-64
1226	-64
1236	-64
1241	-64
1245	-64
1256	-64
1257	-64
1261	-64
1262	-64
1265 THRU 1267	-64
1328	-64
1340	-64
1342	-64
1367	-64
1421	-64

BOEING REF DWG	
CUM LINE NO.	DASH NO. OF DWG 65-54465 INDICATING PART NO.
1422	-64
1424	-64
1426	-64
1453	-64
1486	-64

TABLE I

Core Material and Thickness for Nose Radomes
Figure 1 (Sheet 9)

NOTES

- THIS FIGURE APPLIES TO AIRPLANES WITH C-BAND RADOMES CONSTRUCTED FROM HONEYCOMB PREPREGNATED CORE SANDWICH WITH LAMINATED PLIES OF FIBERGLASS
- RADOME THICKNESS AFTER REPAIR MAY BE MEASURED AS DESCRIBED IN THE NONDESTRUCTIVE TESTING MANUAL, D6-7170, PART 6

[A] REPAIR CORE MUST BE 0.010 THINNER. SEE FIG. 7 FOR REPAIR MATERIAL

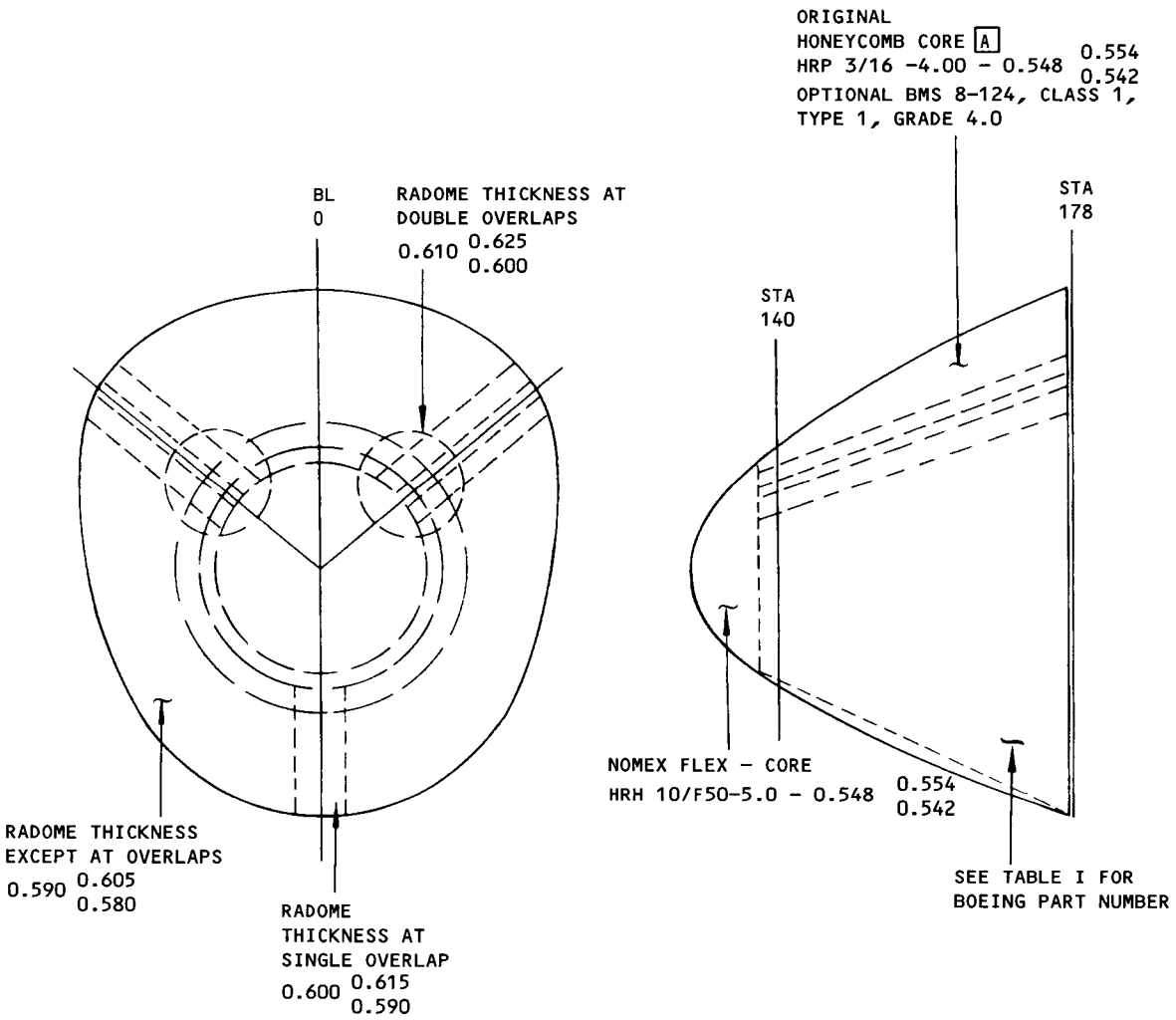

DETAIL III
C-BAND NOSE RADOME WITH HONEYCOMB CORE

Core Material and Thickness for Nose Radomes
Figure 1 (Sheet 10)

BOEING PROPRIETARY - Copyright © - Unpublished Work - See title page for details.

BOEING REF DWG		BOEING REF DWG		BOEING REF DWG	
CUM LINE NO	DASH NO. OF DWG 65-54465 INDICATING PART NO.	CUM LINE NO	DASH NO. OF DWG 65-54465 INDICATING PART NO.	CUM LINE NO	DASH NO. OF DWG 65-54465 INDICATING PART NO.
68	-11				
78	-11				
100	-11				
111	-11				
147	-17				
153	-17				
180	-17				
181	-17				
189	-17				
192	-17				
193	-17				
197	-17				
199	-17				
208	-17				
215	-17				
227	-17				
240	-17				
252	-17				
264	-17				
267	-17				
283	-35				
284	-35				
286	-35				
290	-35				
304	-35				
309	-35				
311	-35				
321	-35				
322	-35				
332	-35				
361	-35				

TABLE II

Core Material and Thickness for Nose Radomes
Figure 1 (Sheet 11)

NOTES

- THIS FIGURE APPLIES TO AIRPLANES WITH C-BAND RADOMES CONSTRUCTED FROM FLUTED CORE SANDWICH WITH LAMINATED PLIES OF FIBERGLASS. (PART NO. 65-54465-14 IS A PREPREGNATED EPOXY RESIN SANDWICH AND PART NO. 65-54465-23 IS A WET LAYUP EPOXY RESIN SANDWICH)
- RADOME THICKNESS AFTER REPAIR MAY BE MEASURED WITH EDDY CURRENT KIT F80124-1 AND AN ELECTRONIC TESTER AS DESCRIBED IN THE NONDESTRUCTIVE TESTING MANUAL, D6-7170, PART 6 (APPLICABLE TO COMMERCIAL AIRPLANES ONLY)

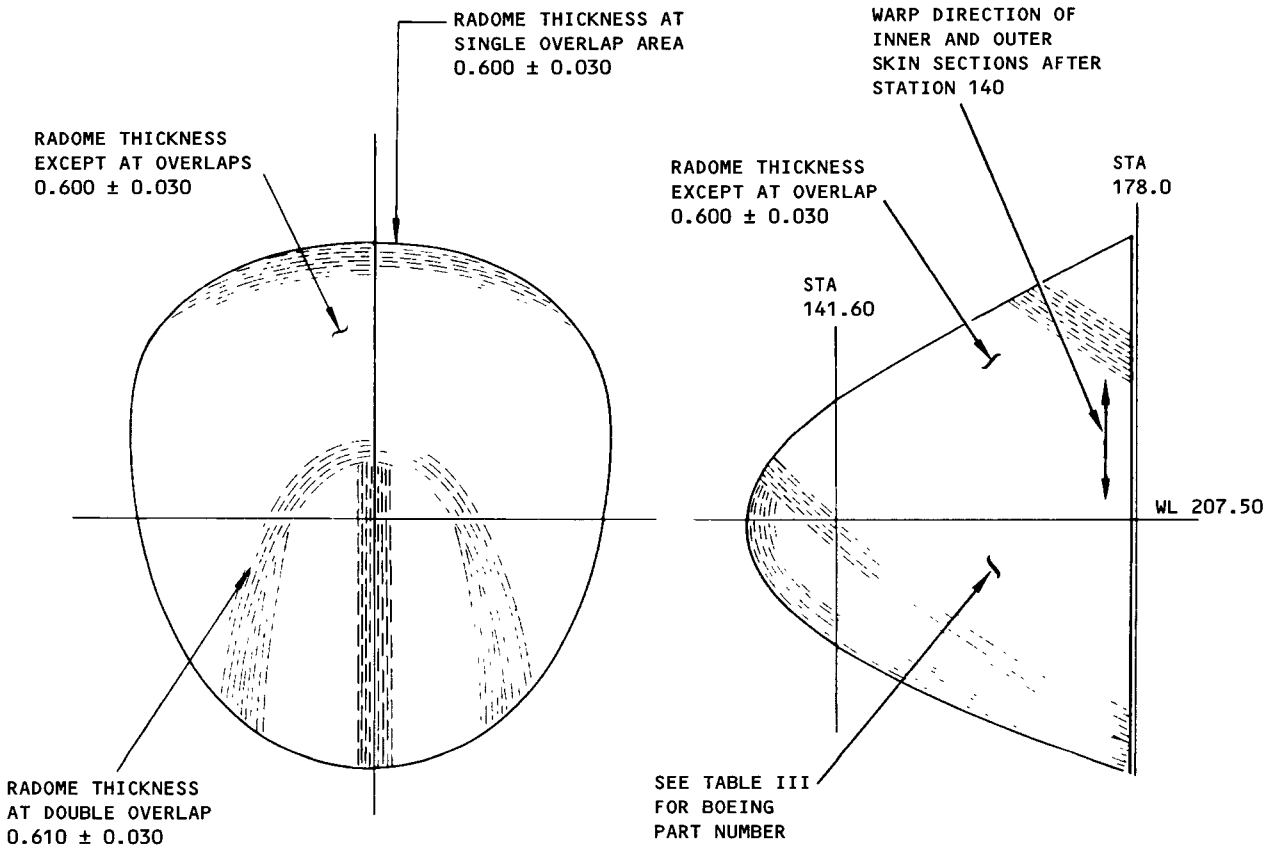

DETAIL IV
C-BAND NOSE RADOMES WITH FLUTED CORE

Core Material and Thickness for Nose Radomes
Figure 1 (Sheet 12)

BOEING PROPRIETARY - Copyright © - Unpublished Work - See title page for details.

BOEING REF DWG	
CUM LINE NO	DASH NO. OF DWG 65-54465 INDICATING PART NO.
6	-14
8	-14
12	-14
14	-14
16	-14
18	-14
19	-14
21	-14
22	-14
24	-14
25	-14
27	-14
28	-14
30	-14
31	-14
34	-14
36	-14
37	-14
42	-23
48	-23
49	-23
50	-23
55	-23
58	-23
59	-23
62	-23
63	-23
65	-23
69	-23
71	-23
74	-23
75	-23
76	-23
85	-23
86	-23
90	-23
95	-23
97	-23
99	-23
103	-23
106	-23
107	-23
114	-23
115	-23
116	-23
117	-23

BOEING REF DWG	
CUM LINE NO	DASH NO. OF DWG 65-54465 INDICATING PART NO.
121	-23
122	-23
123	-23
129	-23
130	-23
133	-23
135	-23
137	-23
138	-23
146	-23
148	-23
150	-23
151	-23
171	-23
174	-23
175	-23
179	-23
183	-23
185	-23
186	-23
187	-23
191	-23
197	-23
198	-23
200	-23
201	-23
202	-23
206	-23
210	-23
211	-23

BOEING REF DWG	
CUM LINE NO	DASH NO. OF DWG 65-54465 INDICATING PART NO.

TABLE III

Core Material and Thickness for Nose Radomes
Figure 1 (Sheet 13)

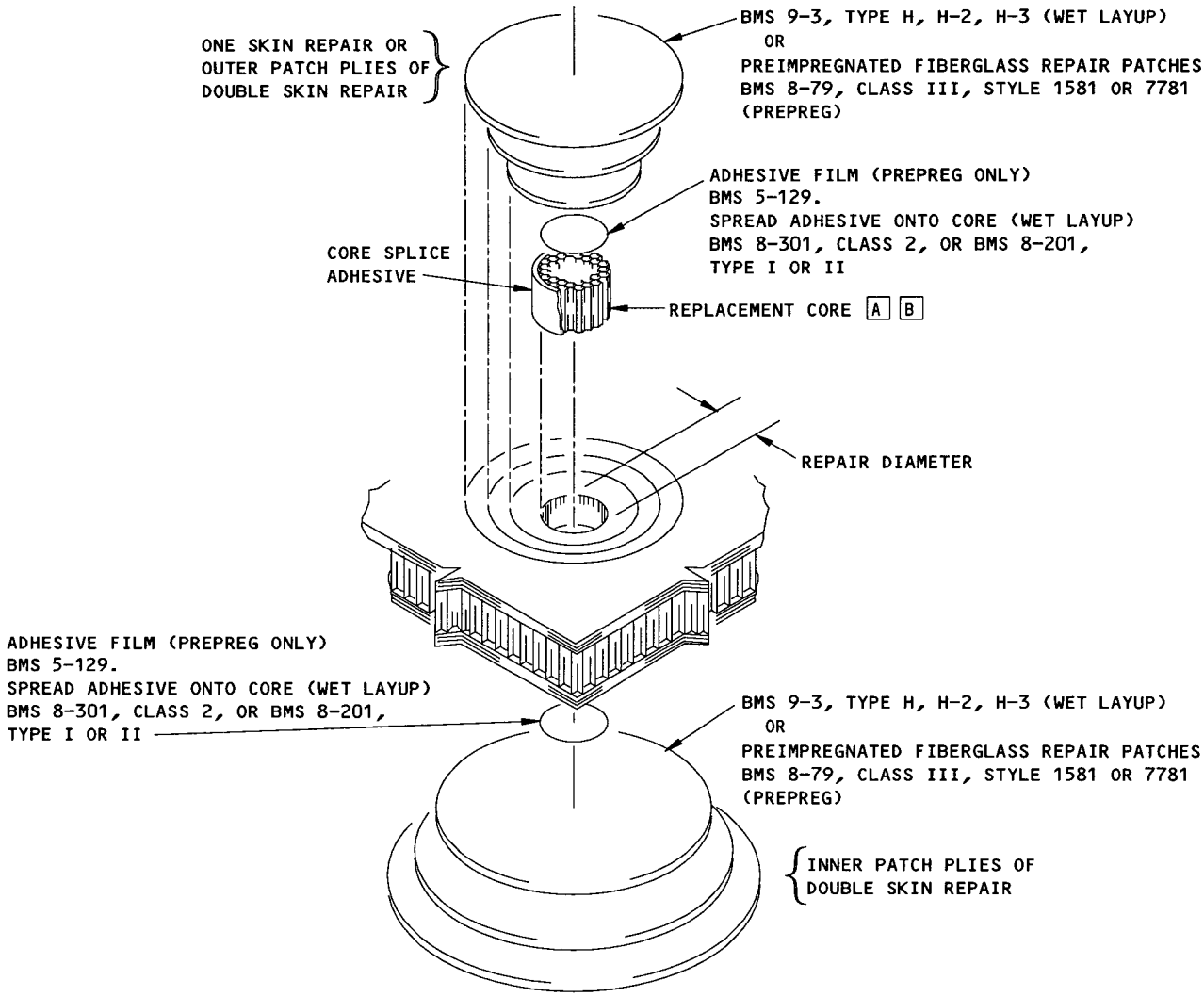

TYPICAL REPAIR LAYUP TO DAMAGE THRU BOTH SKINS
(SEE SECTION VIEWS)

NOTES

A CELL WALLS MUST BE ALIGNED IN THE SAME DIRECTION AS THE ORIGINAL HONEYCOMB

B FOR REPAIR PURPOSES. CORE MATERIAL 0.015 INCH THINNER THAN ORIGINAL THICKNESS IS REQUIRED

C BEFORE REPAIR PLIES ARE APPLIED, SWEEP PLIES ONLY ON THE AREA THAT WILL BE DIRECTLY OVER THE OPENED CORE

Nose Radome Repair (General)
Figure 2 (Sheet 1)

BOEING PROPRIETARY - Copyright © - Unpublished Work - See title page for details.

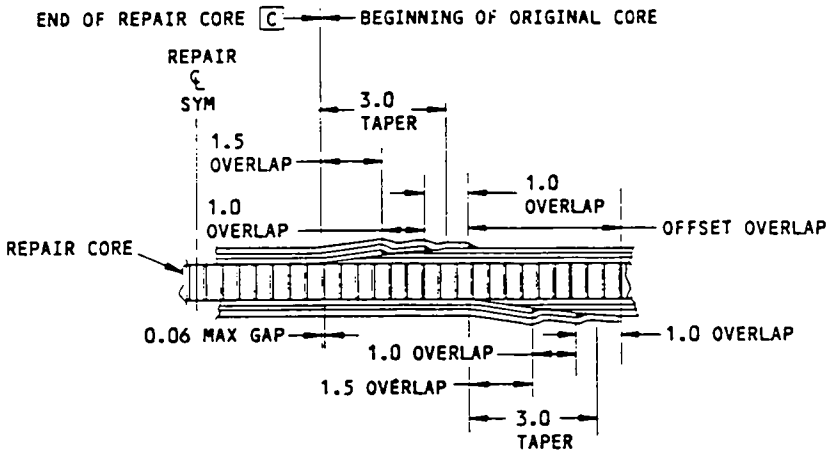

SECTION THROUGH REPAIR
(WET LAYUP ONLY)

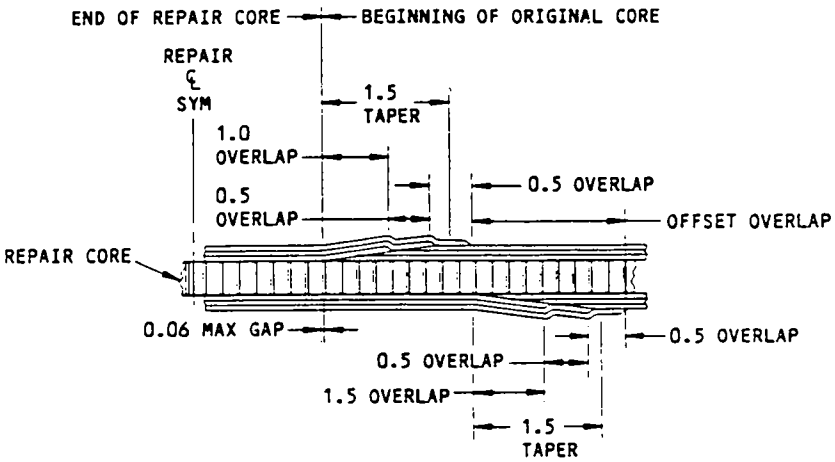

SECTION THROUGH REPAIR
(PREPREG ONLY)

Nose Radome Repair (General)
Figure 2 (Sheet 2)

DAMAGE	INTERIM REPAIRS [B]	PERMANENT REPAIRS	
	WET LAYUP REPAIR 75°F CURE REFER TO PAR. 6	WET LAYUP REPAIR 150°F CURE REFER TO PAR. 6	PREIMPREGNATED REPAIR 250°F CURE REFER TO PAR. 7
HOLES [F]	8.0 MAX DIA DAMAGE. REPAIR PLY-FOR-PLY PER PAR. 6. [C]	NO SIZE LIMIT. [G] REPAIR PLY-FOR-PLY PER PAR. 6. [D]	NO SIZE LIMIT. REPAIR PLY-FOR-PLY PER PAR. 7.
CRACKS	UP TO 8.0 INCHES LONG. REPAIR PLY-FOR-PLY PER PAR. 6. [C]	USE SAME LIMITS AND REQUIREMENTS AS FOR HOLES.	
DELAMI-NATION [F]	USE SAME LIMITS AND REQUIREMENTS AS FOR HOLES AND REPAIR PLY-FOR-PLY PER PAR. 6. [C]	USE SAME LIMITS AND REQUIREMENTS AS FOR HOLES.	
NICKS AND GOUGES [F]	IF FIBER DAMAGE OR DELAMINATION EXISTS, USE SAME LIMITS AND REQUIREMENTS AS FOR HOLES AND REPAIR PLY-FOR-PLY PER PAR. 6. [C]	IF THERE IS NO FIBER DAMAGE OR DELAMINATION, FILL NICKS OR GOUGES PER PAR. 14. IF FIBER DAMAGE OR DELAMINATION EXISTS, USE SAME LIMITS AND REQUIREMENTS AS FOR HOLES.	
DENTS	USE SAME LIMITS AND REQUIREMENTS AS FOR HOLES AND REPAIR PLY-FOR-PLY PER PAR. 6. [C]	UP TO 2.0 IN. DIA WITH NO FIBER DAMAGE OR DELAMINATION, MAY USE COVER PLY REPAIR PER 51-70-06, REPAIR 12. [E] IF OVER 2.0 IN. DIA OR WITH FIBER DAMAGE OR DELAMINATION, USE SAME LIMITS AND REQUIREMENTS AS FOR HOLES.	
WATER INGES-TION	3.5 MAX DIA DAMAGE. COVER-PLY REPAIR PER PAR. 4.B. [E]		
	8.0 MAX DIA DAMAGE. REPAIR PLY-FOR-PLY PER PAR. 4.C. [C]	NO SIZE LIMIT. [G] REPAIR PLY-FOR-PLY PER PAR. 4.C. [D]	NO SIZE LIMIT. REPAIR PLY-FOR-PLY PER PAR. 4.C.

REPAIR DATA FOR 250°F CURE GLASS/EPOXY HONEYCOMB NOSE RADOME
TABLE I [A]

CAUTION: THE APPLICATION OF HEAT IN EXCESS OF 160°F (71°C) OVER A DAMAGE AREA GREATER THAN 16 INCHES IN DIAMETER COULD CAUSE DELAMINATION AND DISTORTION OF PART. IN SUCH CASES VACUUM BAG THE ENTIRE RADOME AND RESTRAIN THE PART IN PLACE.

Repair Limitations
Figure 3 (Sheet 1)

NOTES

- PLY-FOR-PLY PREIMPREGNATED REPAIRS ARE PREFERRED FROM AN ELECTRICAL STANDPOINT
- MAX DIA DAMAGE = MAXIMUM DIAMETER OF THE DAMAGED AREA AFTER CLEANUP OR MAXIMUM CUT-OUT DIAMETER BEFORE TAPER
- MATERIALS MUST GEL AT ROOM TEMPERATURE PRIOR TO HEATING. HEAT MAY BE APPLIED WITH A HEAT BLANKET, HEAT LAMP OR EQUIVALENT. HEAT UP RATE SHOULD BE FROM 2 TO 8°F (1 TO 4°C) PER MINUTE
- FIG. 7 CONTAINS A CHART SHOWING HEIGHT ABOVE REPAIR VERSUS TEMPERATURE RANGE FOR A 250-WATT HEATING LAMP. SWEEP OUT ALL AIR BUBBLES WHICH ARISE DURING HEATING
- FOR REPAIR LIMITS OF DAMAGE CAUSED BY ELECTRICAL DISCHARGE SEE PAR. 13

[A] ALL REPAIRED RADOMES REQUIRE ELECTRICAL TESTING PER PAR. 1.D. EXCEPT FOR PLY-FOR-PLY REPAIRS TO ONE SIDE OF RADOME WITH DAMAGE LESS THAN 4 INCHES IN DIAMETER, COVER-PLY REPAIRS LIMITED BY NOTE [E] AND SMALL REPAIRS LIMITED BY PAR. 14. [F]. ALL REPAIRS TO DAMAGE THRU BOTH SKINS REQUIRE ELECTRICAL TESTING

[B] INSPECT INTERIM REPAIR EVERY AIRPLANE "2A" CHECK USING NDI METHODS PER 51-40-12, PAR 2.I. PERMANENT REPAIR IS REQUIRED IF ANY DETERIORATION IS EVIDENT. THESE REPAIRS HAVVE FAA APPROVAL CONTINGENT ON ACCOMPLISHMENT OF THE INSPECTIONS AT THE REQUIRED INTERVALS

[C] LIMITED TO REPAIR OF DAMAGE TO ONE FACE-SHEET SKIN AND HONEYCOMB CORE. MAINTAIN A MINIMUM OF 6.0 INCHES (EDGE TO EDGE) FROM ANY OTHER DAMAGE (ON EITHER SIDE OF PANEL), FASTENER HOLE, OR EDGE OF PANEL

[D] MAINTAIN A MINIMUM OF 3.0 INCHES (EDGE TO EDGE) FROM ANY OTHER DAMAGE (ON EITHER SIDE OF PANEL), FASTENER HOLE, OR EDGE OF PANEL

[E] THE LIMITATIONS ON EXTRA PLY REPAIRS FOR MOISTURE REMOVAL (PER PAR 4.B.) OR DENT REPAIR (PER 51-40-9, PAR 13) WITHOUT ELECTRICAL TESTING ARE: MAXIMUM 2.0 IN DIAMETER DAMAGE (WITH 4.0 IN. DIAMETER FIBERGLASS COVER PLY), MINIMUM 8 IN. SPACING CENTER-TO-CENTER BETWEEN REPAIRS, AND A MAXIMUM TOTAL OF 3 NONTESTED EXTRA PLY REPAIRS PER RADOME

[F] CERTAIN SMALL REPAIRS DESCRIBED IN PAR. 14 DO NOT REQUIRE ELECTRICAL TESTING. SEE PAR. 14 FOR REQUIREMENTS

[G] SIZE OF THE REPAIR IS LIMITED BY THE ABILITY TO COMPLETE THE REPAIR LAYUP SATISFACTORILY WITHIN THE POT LIFE OF THE RESINS USED

Repair Limitations
Figure 3 (Sheet 2)

RESIN TYPE	COMPONENTS	PARTS BY WEIGHT	POT LIFE OF MIXTURE	MIXING PROCEDURE
RESIN MIX 1 (LAMINATING RESIN) (BMS 8-301, CLASS 2)	FR-7020 RESIN HARDENER	100 ±2 58 ±0.5	APPROX 30 MINUTES AT 75°F (24°C)	ADD HARDENER TO RESIN AND MIX THOROUGHLY
RESIN MIX 2 (LAMINATING RESIN) (BMS 8-201, TYPE I)	EPOCAST 50A RESIN WITH 9816 HARDENER	100 ±2 12 TO 15	25 TO 45 MINUTES AT 75°F TO 80°F (21°C TO 27°C)	
RESIN MIX 3 (LAMINATING RESIN) (BMS 8-201, TYPE II)	EPOCAST 50A RESIN WITH 946 HARDENER	100 ±2 12 TO 15	15 TO 20 MINUTES AT 70°F TO 80°F (21°C TO 27°C)	
RESIN MIX 4 [A] (POTTING RESIN)	RESIN MIX 1 MILLED GLASS FIBERS (1/32-INCH LONG)	100 30 TO 40	APPROX 30 MINUTES AT 75°F (24°C)	PREMIX BMS 8-301, CLASS 2 AND ADD MILLED GLASS FIBERS TO PROVIDE A CONSISTENCY SIMILAR TO THIN PUTTY
RESIN MIX 5 (POTTING RESIN) (BMS 5-28, TYPE 15)	EPOCAST 1615A RESIN EPOCAST 1615B HARDENER	100 ±1 14 ±0.5	20 MINUTES AT 75°F (24°C)	ADD HARDENER TO RESIN AND MIX THOROUGHLY
RESIN MIX 5 (POTTING RESIN) (BMS 5-28, TYPE 16)	EPOCAST 1616A RESIN EPOCAST 1616B HARDENER	100 ±1 7 ±0.3	20 TO 40 MINUTES AT 75°F (24°C)	
RESIN MIX 5 (POTTING RESIN) (BMS 5-28, TYPE 17)	EPOCAST 1617A RESIN EPOCAST 1617B HARDENER	100 ±1 22 ±1	45 TO 60 MINUTES AT 75°F (24°C)	
	MAGNABOND 91A RESIN MAGNABOND 91B HARDENER	100 ±1 19 ±1	65 TO 70 MINUTES AT 75°F (24°C)	
RESIN MIX 6 (SEALER RESIN)	EPOCAST 156A RESIN EPOCAST 156B HARDENER	100 ±2 6 ±0.3	15 TO 25 MINUTES AT 77°F (25°C)	
RESIN MIX 7 (SEALER RESIN)	EPOX-O-WELD	SEE MANUFACTURER'S INSTRUCTIONS		

WARNING: THESE CHEMICALS CONTAIN TOXIC INGREDIENTS. PROVIDE ADEQUATE VENTILATION AND PROTECT THE SKIN AND EYES FROM CONTACT WITH UNCURED RESINS OR CURING AGENT. WEAR NEOPRENE GLOVES OVER COTTON GLOVES FOR PROTECTION OF HANDS. IF SKIN IS EXPOSED TO DIRECT CONTACT WITH UNCURED RESINS OR CURING AGENT, WASH WITH WARM WATER OR SOAP. AVOID THE USE OF SOLVENTS FOR CLEANING THE SKIN.

CAUTION: TO PREVENT CONTAMINATION OF THE RESIN, DO NOT USE WAXED CONTAINERS FOR MIXING.

NOTES

- REFER TO 51-20-3 FOR SOURCES OF MATERIALS

[A] TREAT RESIN MIX 4 AS RESIN MIX 1 FOR CURE TEMPERATURE AND TIME PER FIG. 205

Resin Specifications and Mixing Procedures
Figure 4

REPAIR TYPE	LAMINATE ADHESIVE	SKIN TO CORE ADHESIVE [B]	CORE SPLICE ADHESIVE [C]	CURE TEMPERATURE ±5°F (3°C) AND TIME
CURE OF WET LAYUP REPAIR (SKIN ONLY OR SKIN TO CORE)	RESIN MIX 1 (BMS 8-301, CLASS 2)	RESIN MIX 1	—	150°F ±10°F (66°C ±6°C) FOR 3 HOURS
	RESIN MIX 2 (BMS 8-201, TYPE I)	RESIN MIX 2	—	75°F (24°C) FOR 16 TO 24 HOURS
	RESIN MIX 3 (BMS 8-201, TYPE II)	RESIN MIX 3	—	75°F (24°C) FOR 8 TO 16 HOURS
	RESIN MIX 1 (BMS 8-301, CLASS 2)	RESIN MIX 1	—	70°F ±5°F (21°C ±3°C) FOR 5 DAYS
CURE OF WET LAYUP REPAIR (SKIN AND HONEYCOMB CORE CO-CURED)	RESIN MIX 1 (BMS 8-301, CLASS 2)	RESIN MIX 1	RESIN MIX 5 (BMS 5-28, TYPE 15,16,17)	150°F ±10°F (66°C ±6°C) FOR 4 HOURS
	RESIN MIX 2 (BMS 8-201, TYPE I)	RESIN MIX 2	RESIN MIX 5 (BMS 5-28, TYPE 15,16,17)	75°F (24°C) FOR 24 HOURS
	RESIN MIX 3 (BMS 8-201, TYPE II)	RESIN MIX 3	RESIN MIX 5 (BMS 5-28, TYPE 15,16,17)	75°F (24°C) FOR 16 HOURS
	RESIN MIX 1 (BMS 8-301, CLASS 2)	RESIN MIX 1	RESIN MIX 5 (BMS 5-28, TYPE 15,16,17)	70°F ±5°F (21°C ±3°C) FOR 5 DAYS
CURE OF PREIMPREG-INATED REPAIR (SKIN ONLY OR SKIN TO CORE)	—	BMS 5-129	—	260°F (127°C) FOR 90 MINUTES
CURE OF PREIMPREG-INATED REPAIR (SKIN AND HONEYCOMB CORE CO-CURED OR CORE TO EXISTING SKIN	—	BMS 5-129	BMS 5-129	260°F (127°C) FOR 90 MINUTES
CURE OF CORE TO EXISTING SKIN ONLY	—	RESIN MIX 1 (BMS 8-301, CLASS 2)	RESIN MIX 5 (BMS 5-28, TYPE 15,16,17)	150°F ±10°F (66°C ±6°C) FOR 4 HOURS OR 125°F (52°C) FOR 5 HOURS OR 70°F ±5°F (21°C ±3°C) FOR 5 DAYS
CURE OF RESIN MIX 6 (SEALER RESIN)	—	—	—	150°F (66°C) FOR 1 TO 3 HOURS OR 75°F (24°C) FOR 12 HOURS

CURE DATA FOR 250°F CURE GLASS/EPOXY HONEYCOMB NOSE RADOME
TABLE I [A]

Curing of Repair
Figure 5 (Sheet 1)

BOEING PROPRIETARY - Copyright © - Unpublished Work - See title page for details.

CAUTION: THE APPLICATION OF HEAT IN EXCESS OF 160°F (71°C) OVER A DAMAGE AREA GREATER THAN 16 INCHES IN DIAMETER COULD CAUSE DELAMINATION AND DISTORTION OF PART. IN SUCH CASES VACUUM BAG THE ENTIRE RADOME AND RESTRAIN THE PART IN PLACE.

NOTES

- MATERIALS MUST GEL AT ROOM TEMPERATURE PRIOR TO HEATING. HEAT MAY BE APPLIED WITH A HEAT BLANKET, HEAT LAMP OR EQUIVALENT. HEAT UP RATE SHOULD BE FROM 2 TO 8°F (1 TO 4°C) PER MINUTE
- FIG. 7 CONTAINS A CHART SHOWING HEIGHT ABOVE REPAIR VERSUS TEMPERATURE RANGE FOR A 250-WATT HEATING LAMP. SWEEP OUT ALL AIR BUBBLES WHICH ARISE DURING HEATING

A ALL REPAIRED RADOMES REQUIRE ELECTRICAL TESTING PER PAR. 1.D. UNLESS OTHERWISE SPECIFIED IN REPAIR LIMITATIONS IN FIG. 3

B THE USE OF SKIN TO CORE ADHESIVE IS REQUIRED ONLY WHEN BONDING SKIN TO CORE. WHEN BONDING SKIN TO SKIN IGNORE THE CALLOUT

C BMS 5-28 MUST GEL AT ROOM TEMPERATURE FOR A MINIMUM OF 60 MINUTES PRIOR TO EXPOSURE TO ELEVATED TEMPERATURES

Curing of Repair
Figure 5 (Sheet 2)

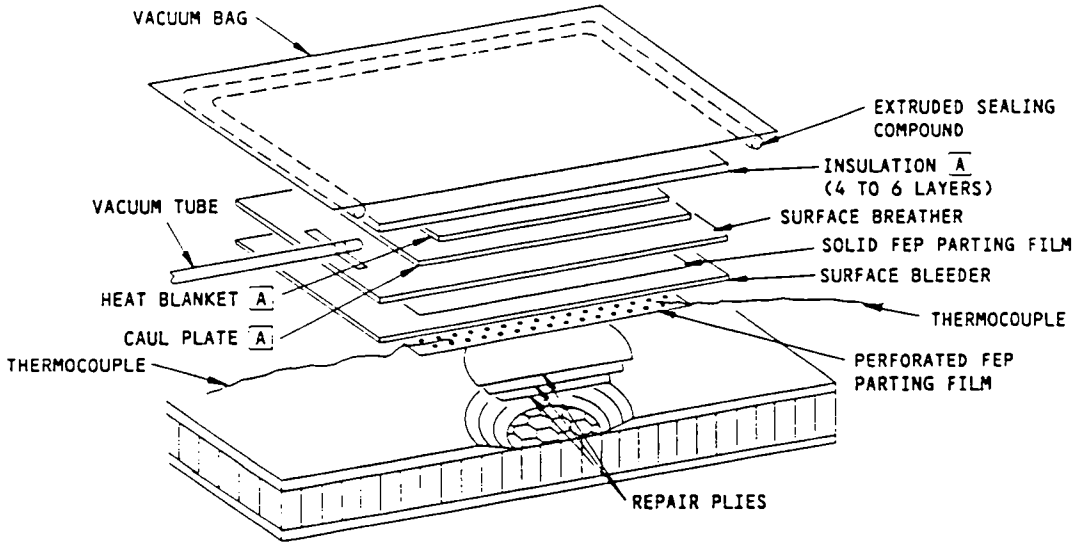

SECTION THRU HONEYCOMB PANEL

BAGGING SEQUENCE FOR CURING SKIN-TO-SKIN OR SKIN-TO-SKIN AND CORE OR CO-CURING SKIN AND CORE REPLACEMENT

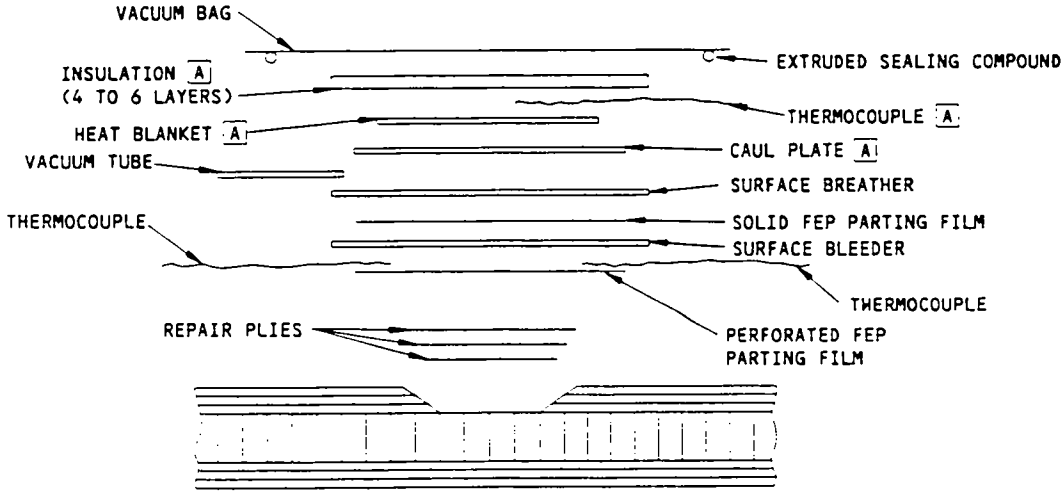

SECTION THRU SKIN-TO-SKIN AND CORE REPAIR

NOTES

A USE ONLY IF HEAT BLANKET IS USED AS A HEAT SOURCE

Application of Pressure During Cure
Figure 6 (Sheet 1)

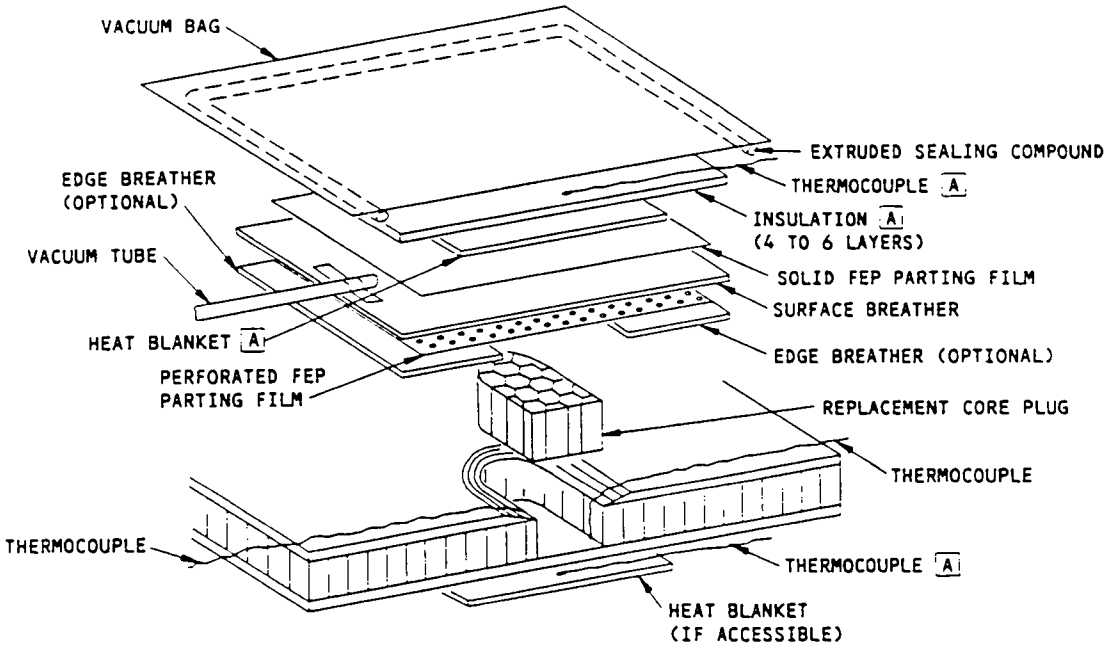

BAGGING SEQUENCE FOR CORE REPLACEMENT

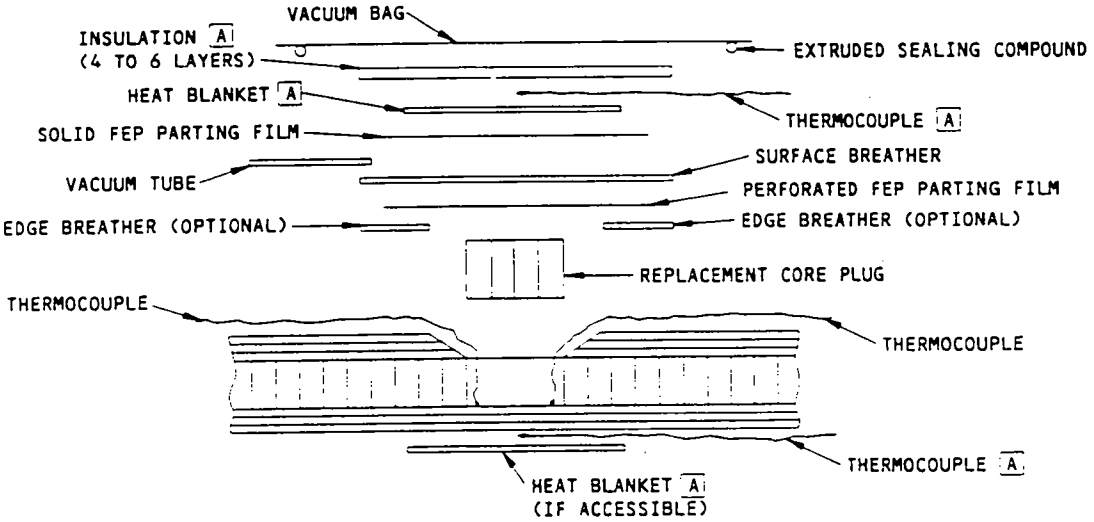

SECTION THRU CORE REPLACEMENT REPAIR

Application of Pressure During Cure
Figure 6 (Sheet 2)

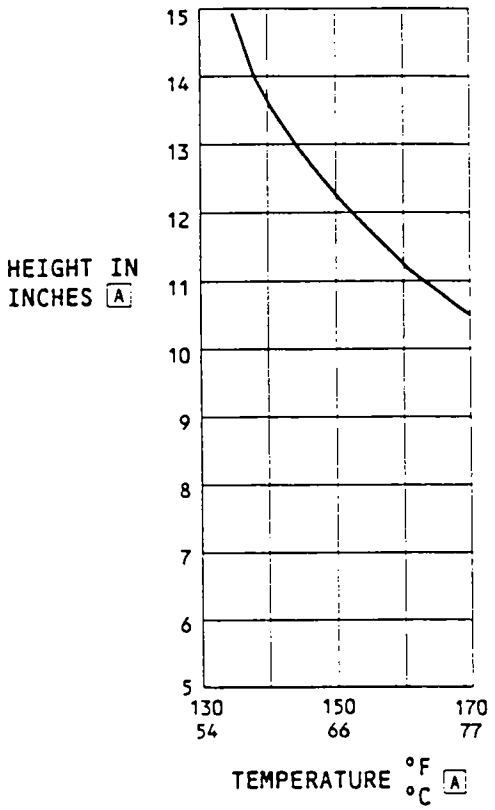

NOTES

- USE THERMOCOUPLES TO MONITOR TEMPERATURE

A THE HEIGHT IN INCHES OF 250 WATT HEAT LAMP FROM THE SURFACES OF THE PATCH VS TEMPERATURE AT SURFACE OF PART (APPROXIMATE)

Heat Lamp Temperature Curve
Figure 7

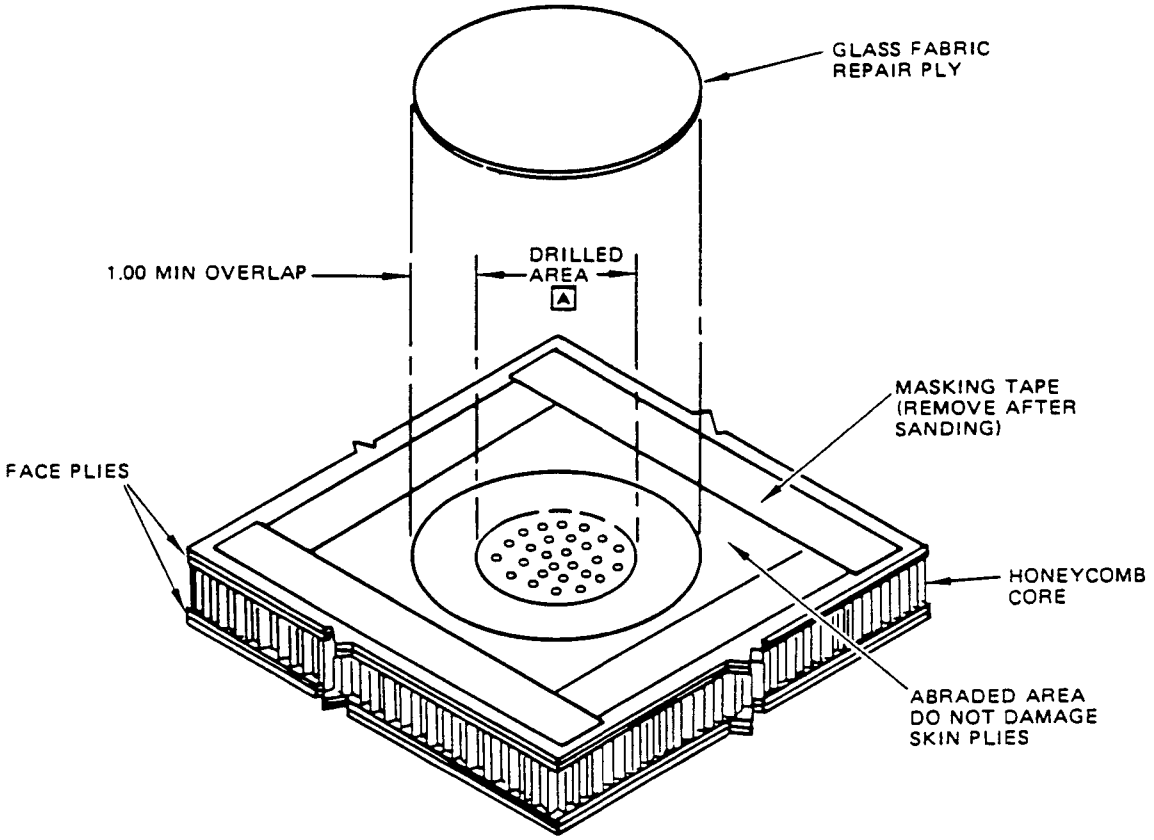

A DRILLED AREA 20 INCHES DIAMETER MAXIMUM

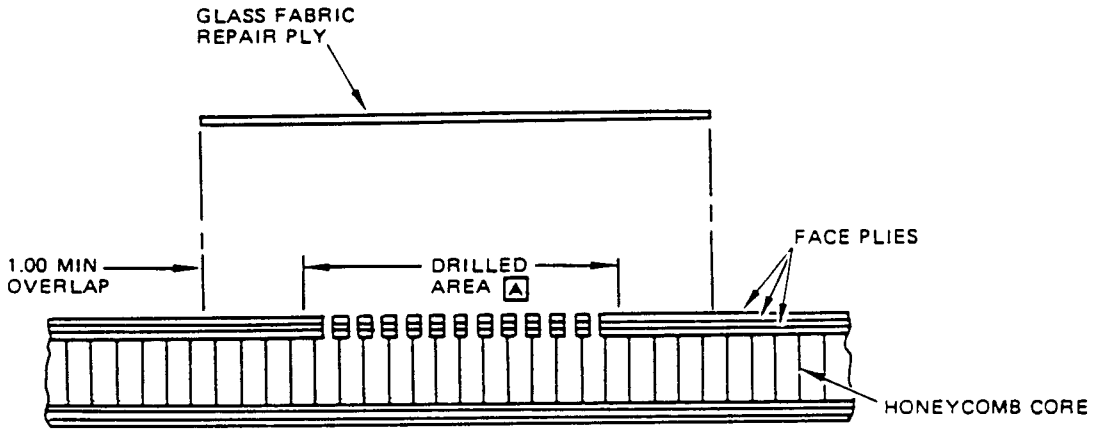

SECTION THROUGH REPAIR

Repair of Honeycomb Sandwich After Water Removal
Figure 8

NOTES

[A] ANTISTATIC FINISH APPLIED DURING MANUFACTURE FROM CUM LINE NUMBER 269 AND MAY BE INCORPORATED RETROACTIVELY BY SB 53-1021

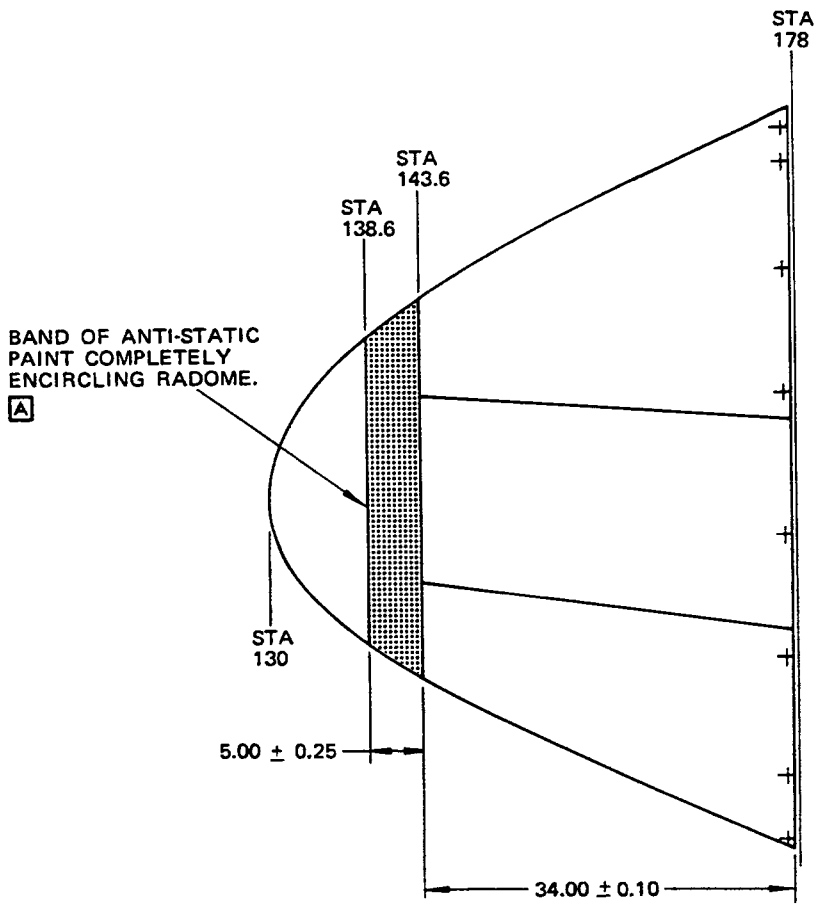

Antistatic Finish of Weather Radome
Figure 9

BOEING PROPRIETARY - Copyright © - Unpublished Work - See title page for details.

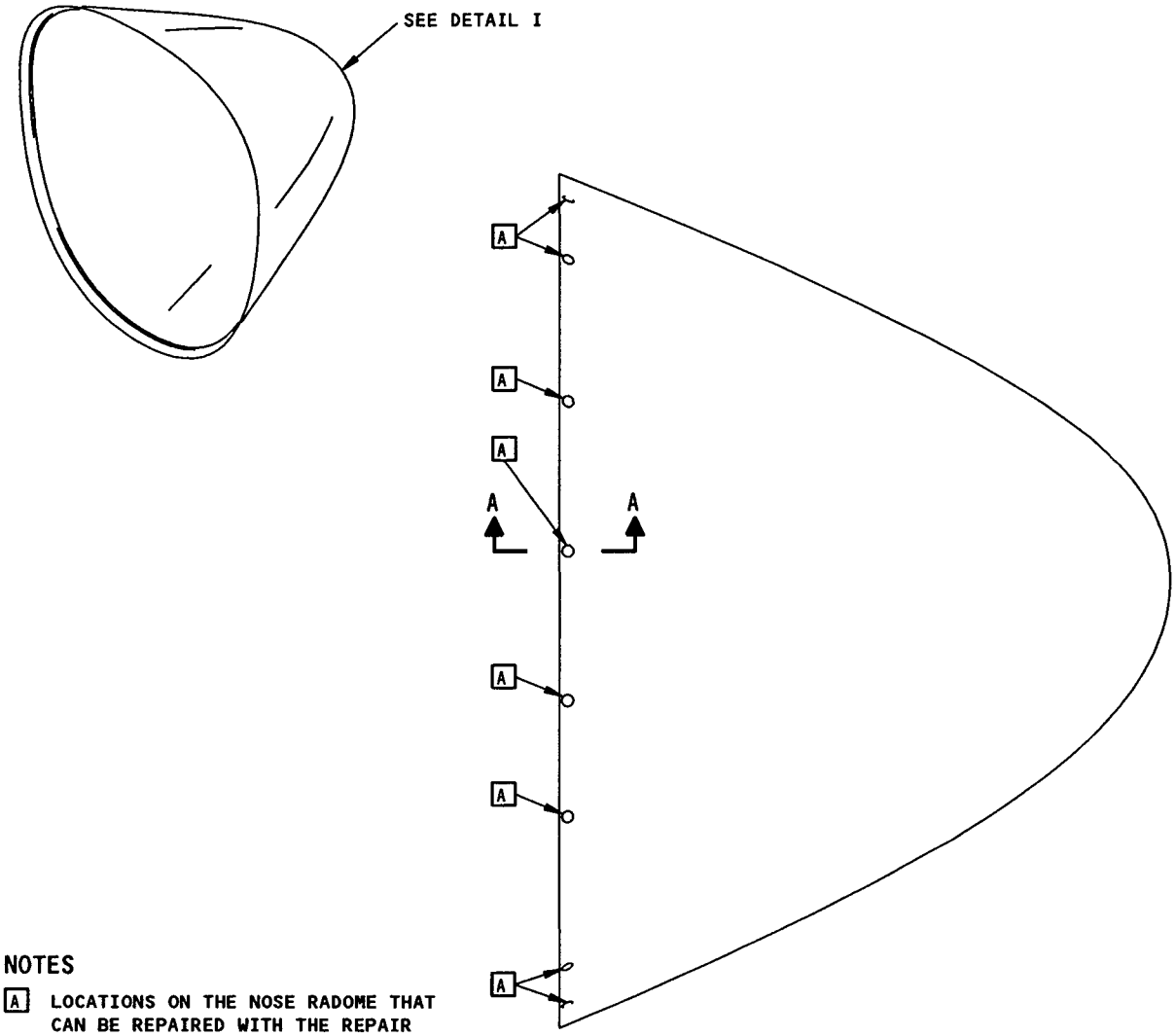

NOTES

A LOCATIONS ON THE NOSE RADOME THAT CAN BE REPAIRED WITH THE REPAIR INSERT (TYPICAL 16 LOCATIONS). SEE DETAIL II.

DETAIL I

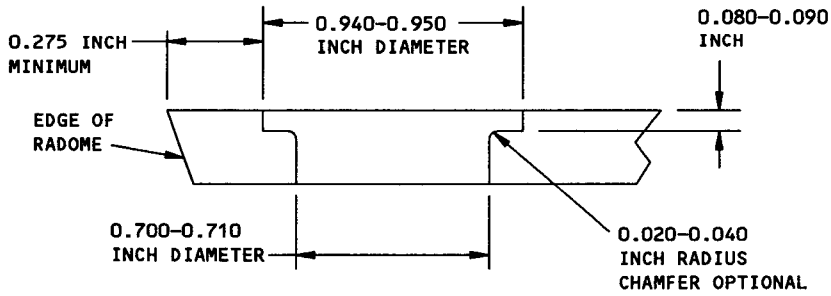

SECTION A-A

Replacement of Damaged Fasteners with Repair Inserts
Figure 10 (Sheet 1)

BOEING PROPRIETARY - Copyright © - Unpublished Work - See title page for details.

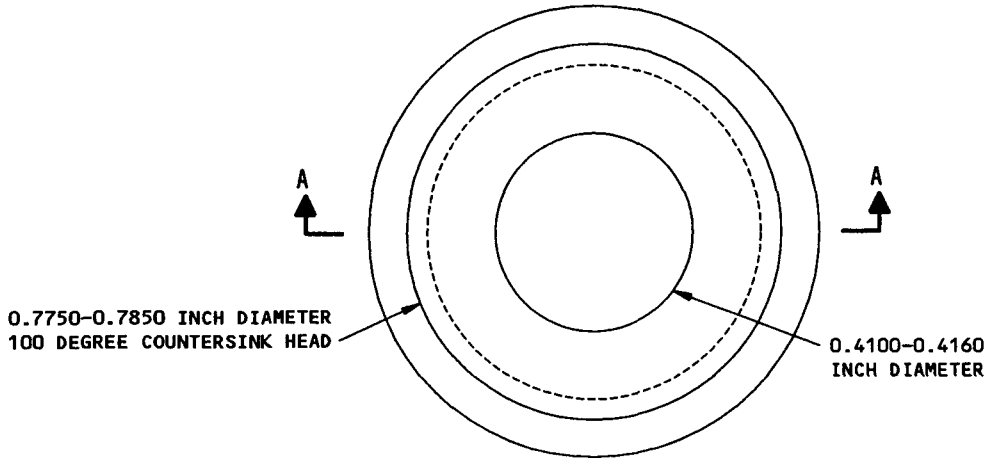

PART 1
REPAIR INSERT
DETAIL II

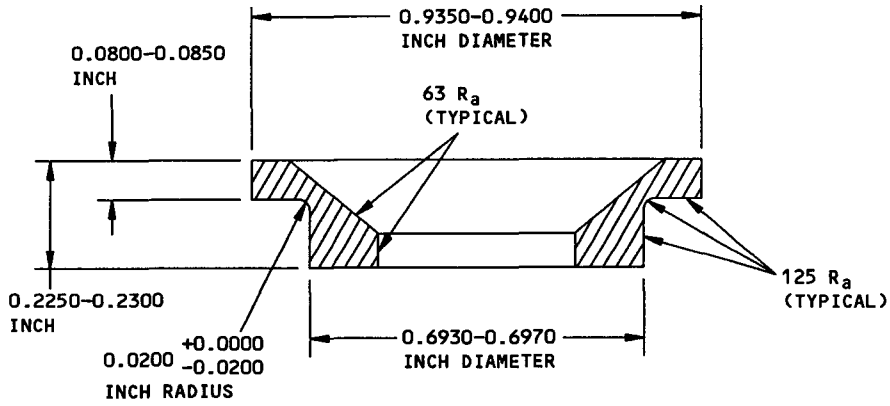

SECTION A-A

REPAIR MATERIAL			
PART		QUANTITY	MATERIAL
1	FASTENER REPAIR INSERT BOEING DETAIL PART NUMBER (284A4801-2)	AS NECESSARY	15-5PH SOLUTION TREATED CORROSION RESISTANCE STAINLESS STEEL (CRES) HEAT TREATED TO 150 TO 170 KSI

TABLE I

Replacement of Damaged Fasteners with Repair Inserts
Figure 10 (Sheet 2)

BOEING PROPRIETARY - Copyright © - Unpublished Work - See title page for details.

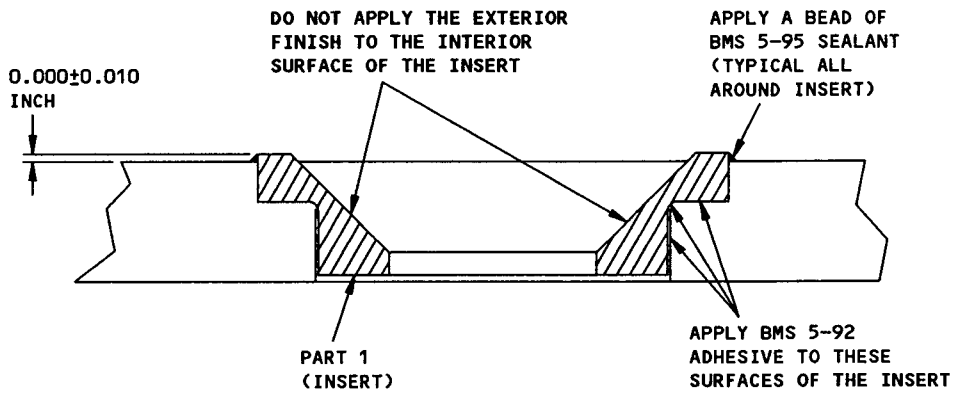

REPAIR INSERT INSTALLED
DETAIL III

ADHESIVE	MIX RATIO (BY WT)		POT LIFE BELOW 80°F (27°C)
	PART A	PART B	
BMS 5-92, TYPE I, EC-2216	140	100	2 HOURS
BMS 5-92, TYPE III, EA-9330	100	33	1 HOUR

TABLE II

Replacement of Damaged Fasteners with Repair Inserts
Figure 10 (Sheet 3)

BOEING PROPRIETARY - Copyright © - Unpublished Work - See title page for details.

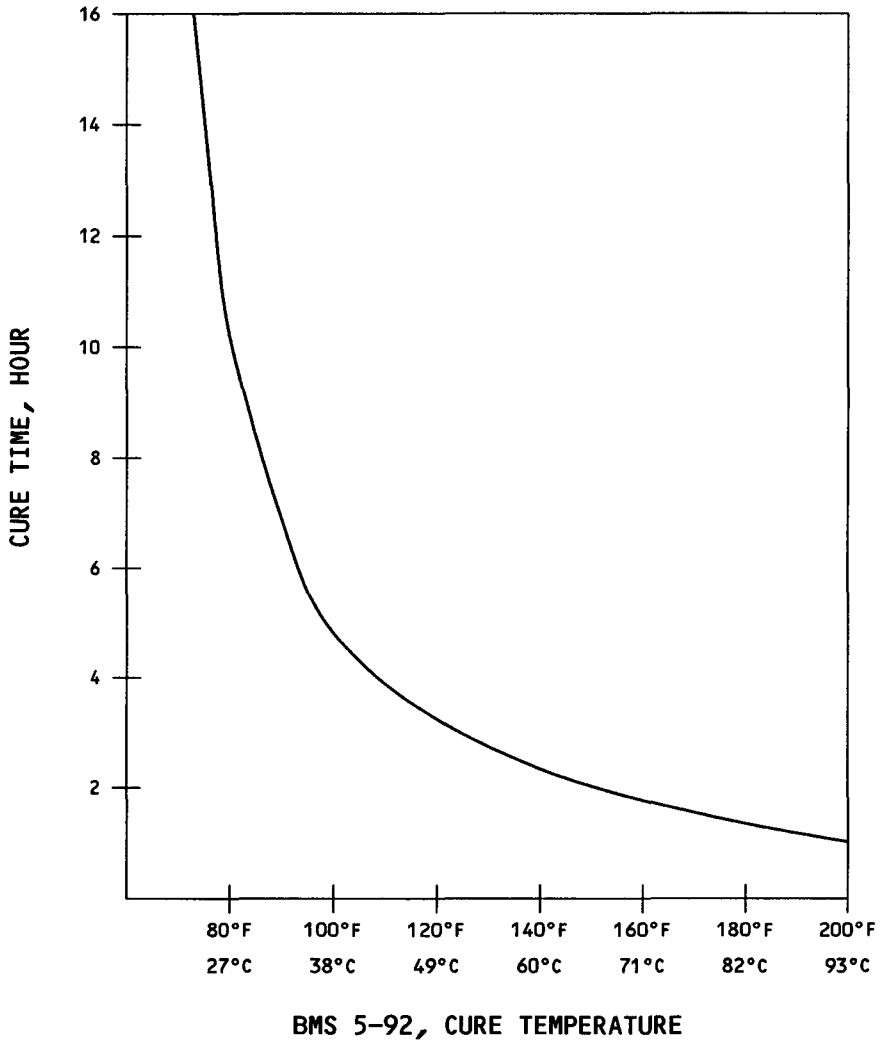

CURE TIME FOR BMS 5-92 ADHESIVE
DETAIL IV

Replacement of Damaged Fasteners with Repair Inserts
Figure 10 (Sheet 4)

BOEING PROPRIETARY - Copyright © - Unpublished Work - See title page for details.